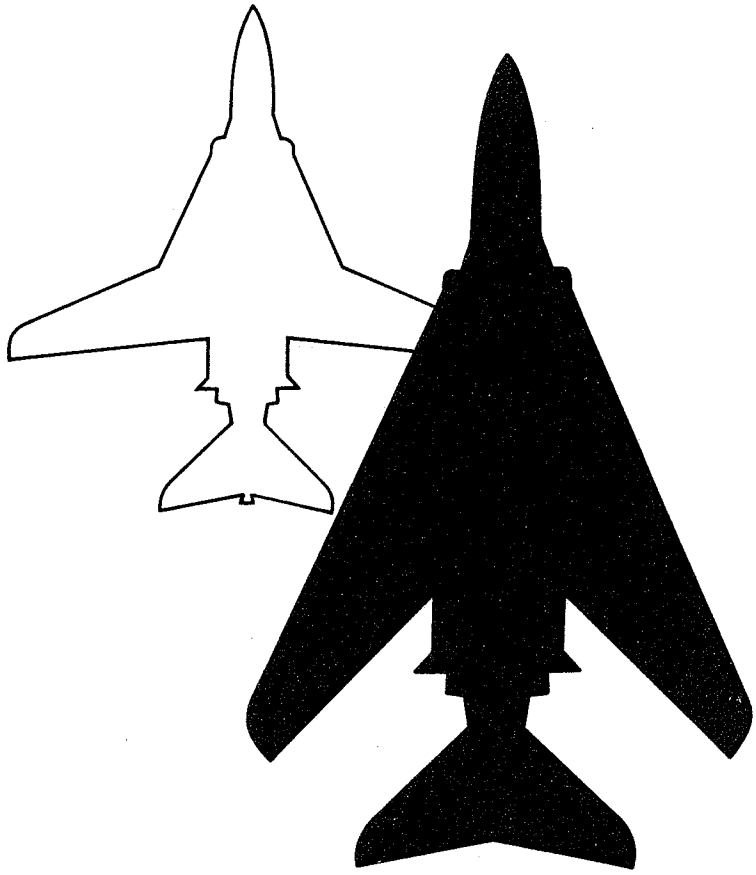

USN F-4 (FVS) AIRCRAFT

DETAIL
SPECIFICATION
SD 513-2

MCDONNELL

SD-513-2

MAC CONTROL NO. C-122149

DEPARTMENT OF THE NAVY
NAVAL AIR SYSTEMS COMMAND
WASHINGTON, D.C., 20360

DETAIL SPECIFICATION FOR MODEL F-4 (FVS) AIRPLANE

PRELIMINARY

DATE **28 July 1966**

REVISED **10 August 1966**

CLASSIFIED BY DD 254 DTD _____

SUBJECT TO GENERAL DECLASSIFICATION SCHEDULE OF EXECUTIVE ORDER 11652 AUTOMATICALLY DOWNGRADED AT TWO-YEAR INTERVALS DECLASSIFIED ON DEC. 31, 1972

GROUP 4
DOWNGRADED AT 3-YEAR INTERVALS, DECLASSIFIED AFTER 12 YEARS

PREPARED BY: Neil C. Burnett
Neil C. Burnett, Analyst
Engineering Contract Services

ACCEPTED BY: R.A. Noyes
R.A. Noyes, Senior Project Engineer
Aircraft Advanced Engineering

ACCEPTED BY: Kendall Perkins
Kendall Perkins, Vice President
Engineering

ACCEPTED BY: G. S. Graff
George S. Graff, Vice President
Engineering Technology

COPY NO. 33

FOREWORD

The asterisk (*) is used in this document to indicate that the information was not available at the time this Detail Specification was published.

TABLE OF CONTENTS

MAC 2447U (6 OCT 65)

TABLE OF CONTENTS (Cont'd)

TABLE OF CONTENTS (Cont'd)

TABLE OF CONTENTS (Cont'd)

TABLE OF CONTENTS (Cont'd)

TABLE OF CONTENTS (Cont'd)

TABLE OF CONTENTS (Cont'd)

TABLE OF CONTENTS (Cont'd)

TABLE OF CONTENTS (Cont'd)

TABLE OF CONTENTS (Cont'd)

TABLE OF CONTENTS (Cont'd)

DETAIL SPECIFICATION

FOR

MODEL F-4(FVS) AIRPLANE

1.0 SCOPE.

1.1 SCOPE.- This specification and its appendices cover the requirements for the design and construction of a two-place, carrier-based, twin engine, turbojet all-weather fighter for the U.S. Navy. The first model F-4(FVS) airplane scheduled for service delivery shall be as defined herein.

Navy Airplane model designation	F-4(FVS)*
Designer's name and model designation	McDonnell Aircraft Corporation Model 98FVS
Number and kind of engines	Two J79-GE-10 General Electric Turbojet
Number and places for crew	Two-Tandem - Cockpit

This fighter, incorporating a variable sweep wing configuration, shall be designed to maximize F-4 commonality by utilization, wherever practicable, of existing elements of the F-4J weapon system and logistics support system, except where such usage would degrade the ability of the F-4(FVS) to perform its mission as defined herein. As a general requirement, changes from previous models are to be made only where there is clear evidence that the benefits outweigh the penalties in terms of overall cost, delay, performance, etc.

1.1.1 MISSION.- The mission of this fighter shall be air-to-air missile combat under all weather conditions and air-to-ground attack missions with conventional and special external weapons.

1.1.2 OPERATION.- All operations shall be at an ICAO Standard Day, unless otherwise specified herein.

1.1.2.1 CARRIER OPERATION.- The airplane shall be suitable for catapult launching and arrested landing as specified in 1.1.3, and shall be suitable for operation from Class CVA-19 (CVA-14, -19, -31, -34, and -38) and CVA-41 and larger class carriers, if equipped with catapults and arresting gear as specified in 1.1.3.

1.1.2.2 LAND-BASED OPERATION.- The airplane shall be suitable for taking off and landing on an ordinary landing field.

* F-4(FVS) designation will be replaced with a normal F-4_ letter designation as assigned by NAVAIRSYSCOM.

1.1.2.3 TRANSIENT OPERATION.- Subject to airplane, engine and missile limitations specified in 1.1.2.3.1, the airplane, engine and missile system shall be suitable for five minutes transient operation between Mach 2.0 and Mach 2.4. Any modification or change to existing equipment or structure as a result of the higher operating temperatures and strength requirements encountered shall be the subject of separate negotiations.

1.1.2.3.1 OPERATING LIMITS.- The transient operating limits between Mach 2.0 and Mach 2.4 shall be as follows:

(1) ENGINE MAXIMUM FLIGHT SPEED LIMITS.- The engine maximum flight speed limits shall be determined from the engine model specification referenced in 3.12.2 and Figure 1, taking into account the engine inlet effects on the compressor face total pressure.

(2) AIRPLANE STRUCTURE.- Structure shall be limited to not more than 5 minutes of continuous operation during any one flight within the transient operating limits. The structural limits during transient operation shall be as established on the V_I and V-n diagrams. (Figure 5 and Figures 6.1 and 6.2) Should damage occur to the stabilator leading edge and stabilator trailing edges within the transient limits, occasional replacement of the stabilator shall be permissible.

(3) CONTRACTOR FURNISHED EQUIPMENT.- Above 60,000 feet and Mach 2.0 CFE equipment qualified in accordance with Spec SD513-1 shall be acceptable to NAVAIRSYSCOM.

(4) WINDSHIELD SIDE PANELS.- Some deterioration of optics may occur at temperatures encountered above 275°F.

(5) EQUIPMENT COOLING AND PRESSURIZING REQUIREMENTS.- Temperature of air used to pressurize fuel tanks and equipment may exceed design limits at the heat exchanger outlet above Mach 2.0.

(6) PRESSURE SUIT PROVISIONS.- Pressure suit delivery air temperatures may exceed the 50°F design requirements above Mach 2.07 and will be approximately 77°F at Mach 2.26 and as high as 107°F at Mach 2.4.

(7) OCCUPIED COMPARTMENTS.- Equilibrium cabin air temperature may exceed 106°F above Mach 2.05, and for transient operation within the limitations herein, cabin temperature as high as 115°F at Mach 2.26 and 140°F at Mach 2.4 may be expected.

SD-513-2

INSTALLED ENGINE FLIGHT SPEED LIMITS MILITARY AND ALL A/B ICAO STANDARD DAY

NOTE: THESE INSTALLED ENGINE FLIGHT SPEED LIMITS ARE DERIVED FROM THE ENGINE FLIGHT SPEED LIMITS IN G.E. SPEC E2039, DATED 5 OCTOBER 1965 PAGE E-6 AS AFFECTED BY THE INSTALLED COMPRESSOR FACE TOTAL PRESSURE DETERMINED FROM THE 10 – 14° VARIABLE INLET RECOVERY PER PAGE 19 OF MCDONNELL REPORT 7923 VOL. 1.

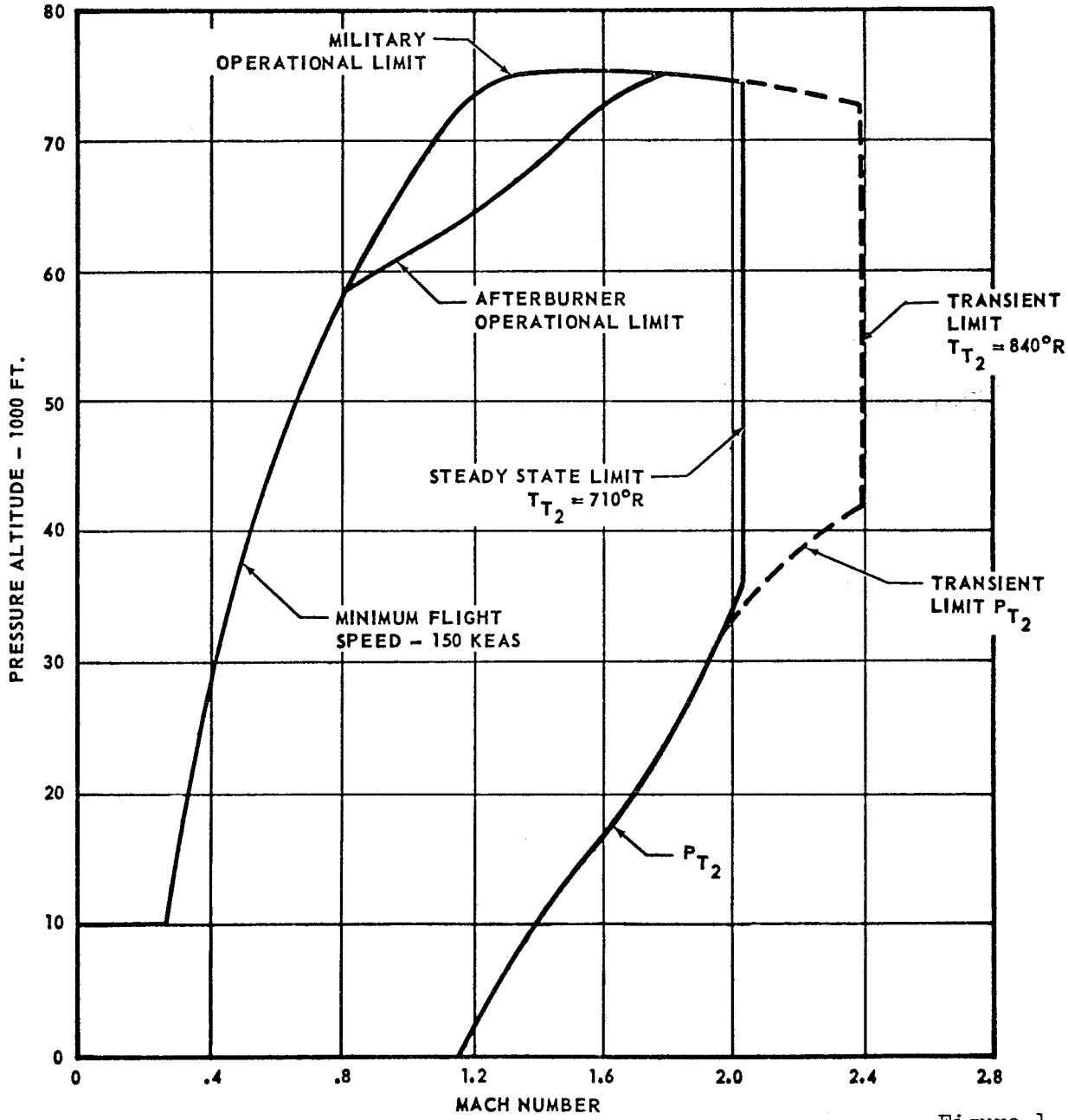

Figure 1

1.1.3 CARRIER SUITABILITY.

1.1.3.1 CATAPULTING.- The airplane shall be operable from C-11-1 and superior type catapults (performance curve 3 described in BUWEPS SK RSSH-1338K, 10 November 1961) under the following conditions:

(1) 51,750 pounds
(2) 2 knots wind over deck
(3) Without the use of afterburner

1.1.3.2 CATAPULTING.- The airplane shall be operable from C-7 and superior catapults (performance described in BUWEPS SK RSSH-1338K, 10 November 1961) under the following conditions:

(1) Basic catapulting design gross weight (See 3.4.1.1.1 (6.2.2.3)) (69,000 pounds)
(2) 22 knots wind over the deck
(3) With maximum afterburner

1.1.3.3 CATAPULTING.- The airplane shall be operable from C-13 catapult (performance described in BUWEPS SSK RSSH-1338K, 10 November 1961 with tow force limited to 224,000 pounds) under the following conditions:

(1) Basic catapulting design gross weight (see 3.4.1.1.1(6.2.2.3)) (69,000 pounds)
(2) 9 knots wind over the deck
(3) With maximum afterburner

1.1.3.4 ARRESTING.- The airplane shall be operable with the MK-7 Mod 2 arresting gear. (performance described in NAEL MISC 08196, Revision A, dated 29 October 1964) under the following conditions:

(1) Carrier Landing Design Gross Weight (see 3.4.1.1.1(6.2.2.5)) (38,655 pounds).
(2) 2 knot wind over deck
(3) D-component of the arresting hook load shall not exceed 140,000 pounds.

1.1.3.5 BARRICADE.- The airplane shall be operable in the MK-7 Mod 2 barricade. (33,600 pounds with 25 knots wind over deck.)

1.1.3.6 ELEVATOR SUITABILITY.- The airplane shall fit on all elevators of CVA-19 and CVA-41 class carriers and larger, and shall fit with a straight fore and aft spot on centerline elevators, except for CVA-38, with dimensions as specified in NAFF 06900, dated 1 July 1961. A minimum of one-foot clearance shall be maintained under all conditions.

1.2 CLASSIFICATION.- Applicable.

1.2.1 WEIGHT AND BALANCE CLASSIFICATION.- See 3.19.2.12.

1.3 CHANGES.- Appendix 2 provides a complete listing of Engineering Change Proposals (ECP's) received by the contractor through 14 March 1966 which are considered basic to this specification as applicable to the aircraft configuration defined herein. Changes approved by the procuring activity and received by the contractor from 15 March 1966 through 10 June 1966 are listed below and become a part of this specification. Changes approved by the procuring activity and received by the contractor after 10 June 1966 shall be added to the list below and shall become a part of this specification, except such additions shall be subject to separate negotiation. Effectivity of ECP's shall be as established in this specification or in the contract change action.

ECP NO.	AUTHORIZATION (IBCC/CO. NO.)	TITLE OF CHANGE
6046	51-1040	MCL Change - AN/ARR-69 from CFE to GFAE

1.4 MASTER CONFIGURATION LIST.- Appendix 1, the Master Configuration List (Part II) for the Model F-4(FVS) Airplane, as amended by authorized changes, shall constitute a list of the Government Furnished Equipment. The type of installation shall be "A", Government Furnished Contractor Installed and "B", Government Furnished Government Installed.

2.0 APPLICABLE DOCUMENTS.

2.1 EFFECTIVITY OF DOCUMENTS.- Applicable.

2.1.1 SPECIFICATIONS AND STANDARDS.- Government specifications and standards shall be applicable to this aircraft to the extent specified herein. The applicable issue of these specifications and standards shall be as specified in the List of Military Specifications and Standards approved by NAVAIRSYSCOM, NAVWEPS 00-25-544 dated October 1965 except as specifically modified herein. Those equipments and/or portions of the airframe which have been previously satisfactorily qualified or proven by service usage and are either exactly common to the F-4 series or need to be modified therefrom only insignificantly, may continue to be governed by those specifications invoked at the time of design.

2.1.1.1 GENERAL SPECIFICATION.- General Specification for the Design and Construction of Airplanes for the United States Navy, SD-24-J, Change 1, dated 1 November 1962 forms a part of this specification and shall be followed where applicable, unless otherwise modified herein. Paragraph numbers of this specification correspond to paragraph numbers of SD-24-J, Change 1, dated 1 November 1962.

2.1.1.2 APPLICABILITY OF GENERAL SPECIFICATION.- Paragraphs of this specification which completely supersede the requirements of SD-24-J, Change 1, are completely rewritten. Paragraphs which contain deviations or supplementary requirements are labeled "Applicable" and the deviation or supplementary requirement incorporated therein. Paragraphs which waive a requirement normally applicable to this type of airplane are labeled "Not required". Paragraphs which do not apply to this type of airplane are labeled "Not applicable".

2.1.2 STANDARDS.- See 2.1.1.

2.1.3 DRAWINGS.- Government drawings shall be applicable to this aircraft to the extent specified herein. The applicable issue of these drawings shall be as specified in the List of Standard Drawings used by NAVAIRSYSCOM, NAVWEPS 00-25-543 dated September 1965 except as specifically modified herein. Those equipments and/or portions of the airframe which have been previously qualified or proven by service usage and are common to the F-4 series or slightly modified therefrom, and which use parts defined by standard drawings of earlier issue may be utilized without change.

2.1.4 PUBLICATIONS.- Publications applicable to the design and construction of naval airplanes shall be in accordance with the list specified in 2.1.1 and the following:

2.1.4 (Continued)

(a) Aviation Supply Catalog of Navy Material (revisions through August 1954).

(b) Navy Procurement Directives (NAVEXOS P-1034) Appendix A, Manual for Source Inspection and Administration of Navy Procurement, dated 1 July 1964.

2.1.4.1 SUPPLY CATALOGS OF NAVY MATERIALS.- Applicable.

2.2 PRECEDENCE OF DOCUMENTS.- Applicable, except that MIL-STD-143A shall apply. The detail specification shall take precedence over all applicable publications. The contractor's process specifications as approved by the NAVPLANTREPO shall take precedence over the applicable publications.

2.3 through 2.3.3 INTERNATIONAL MILITARY STANDARDIZATION PROGRAMS.- Applicable.

2.4 DATA AND TESTS.- No data or tests are required by this specification or by applicable documents referenced in Section 2, unless specified in the contract.

3.0 REQUIREMENTS.

3.1 CHARACTERISTICS.- Applicable.

3.1.1 THREE-VIEW DRAWING.- See Page 11.

3.1.2 PERFORMANCE.

3.1.2.1 GUARANTEED TABULATED PERFORMANCE.- The guaranteed performance shall be as follows (See Note 3):

Maximum Speed in level flight at 45,000 ft., maximum thrust, combat weight, (See Notes 1 and 6) not less than (kts/M)	1319/2.30
Maximum Speed in level flight at 35,000 ft. with military thrust, at combat weight, (See Note 1) not less than (kts/M)	588/1.02
Maximum Altitude for Mach 2.0 level flight at combat weight, (See Note 1) at maximum thrust, not less than (ft.)	59,500
Supersonic Rate of Climb at 35,000 ft., maximum thrust, combat weight, (See Note 1) not less than (fpm)	23,300
Time to Climb, Sea level to 35,000 ft., starting at climb speed at sea level, combat weight, maximum thrust, (See Note 1) (minutes) (See Figure 2)	1.29
Supersonic Combat Ceiling, maximum thrust combat weight (See Note 1) not less than (ft.)	59,800
Subsonic Combat Ceiling, maximum thrust, combat weight (See Note 1) not less than (ft.)	49,100
Time to Accelerate from 1.02M at 35,000 ft. to 1.2M at 35,000 ft., using maximum thrust, combat weight (See Note 1) not more than (minutes)	0.58
Stall Speed ($V_{S_{PA}}$) at sea level with two engines operating (see Note 2) not more than (kts)	102

3.1.2.1 (Continued)

NOTES:

(1) Combat weight shall be the actual weight empty (3.1.3.3 as adjusted for authorized changes) plus the useful load of Paragraph 3.1.3.2.12(1), less 40% of internal fuel.

(2) Stall speed at sea level, shall be based on the actual weight empty (3.1.3.3 as adjusted for authorized changes) with the useful load of Paragraph 3.1.3.2.12(7).

(3) The above performance is based on the J79-GE-10 engine performance noted in General Electric Specification E-2039, dated 5 October 1965, and calculated from G.E. Data Deck, R65FPD199, revised May 1966, with corrections for duct losses per Page 19 of McDonnell Report 7923, Vol. 1. Should the engine operating characteristics be proven to differ from those specified in the General Electric Specification the guaranteed performance shall be adjusted accordingly.

(4) Gross weights and performance are based on the use of Spec MIL-F-5624E, Grade JP-5 fuel weighing 6.8 pounds per gallon.

(5) It is recognized by both the Navy Department and the Contractor that under the present state-of-the-art the process of determining in-flight engine thrust and airplane performance and the correcting of flight performance to standard atmospheric conditions and to the thrust specified by the engine specification are not exact procedures and consequently involve some variation. Furthermore, variations in pilot technique and small differences between nominally identical airplanes also exist. The guarantees contained in this specification have no margin for these variations. These factors shall be considered when evaluating Flight Test Data, for compliance with these guarantees.

(6) The above performance is subject to airplane and engine limitations. The airplane limitations are specified in 1.1.2.3.1 and Figures 5, 6.1 and 6.2. The engine operating limits shall be determined from the approved engine model specification taking into account the engine inlet effects on the compressor face total pressure. The resulting installed engine flight speed limits are as specified in 3.12.2.

3.1.2.2 ADDITIONAL PERFORMANCE CURVES.-Not required.

3.1.2.3 SPECIFIC FUEL CONSUMPTION.- Applicable.

SD-513-2

F-4(FVS)
Three View

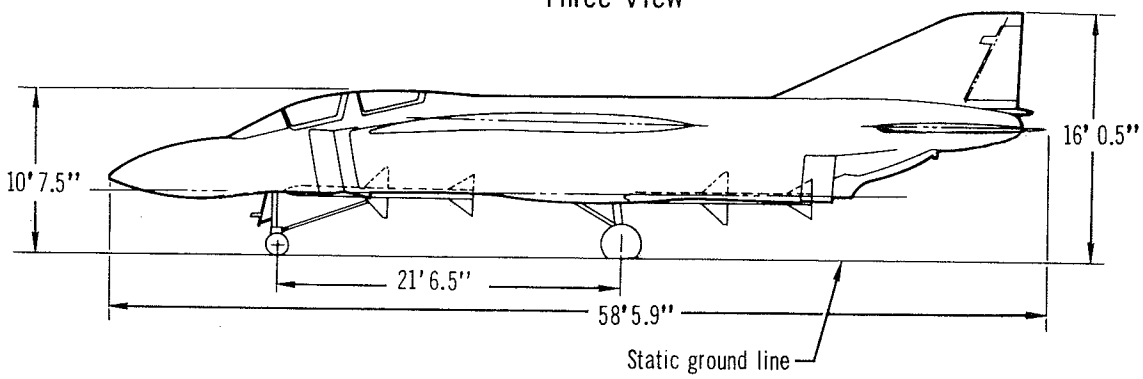

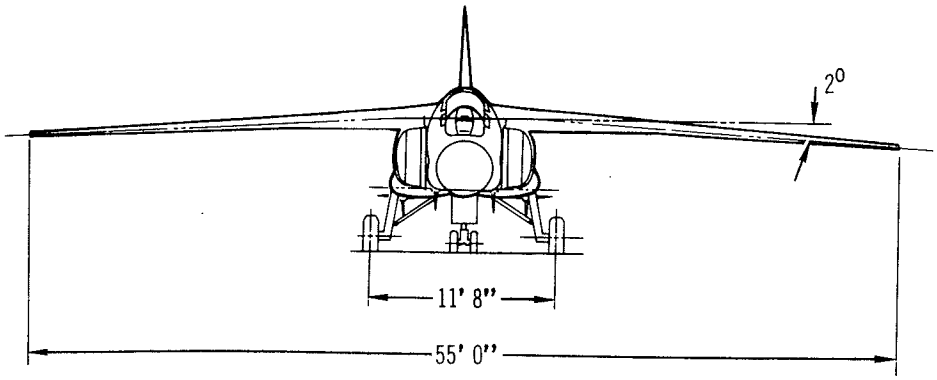

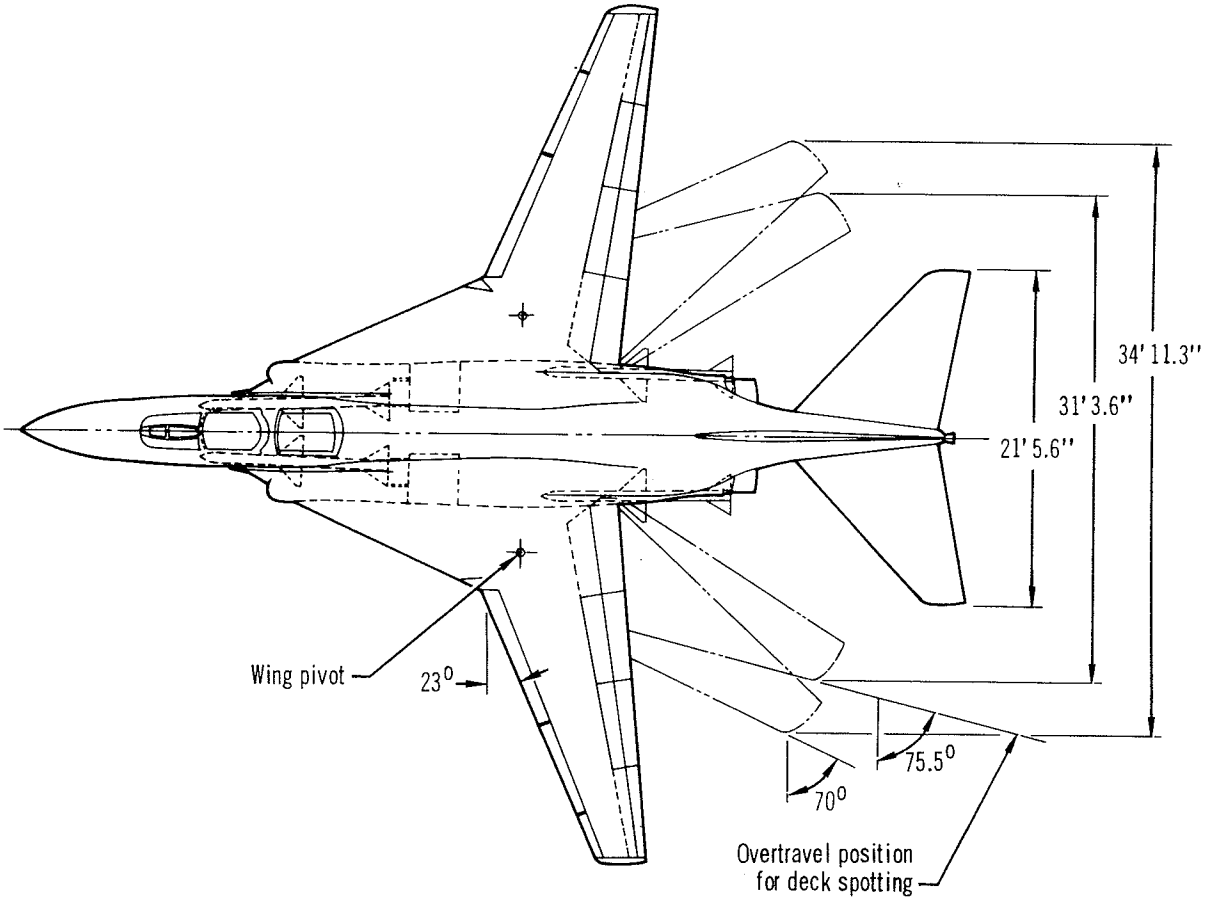

Model F-4(FVS) Mach Number for Maximum
Subsonic Rate of Climb vs Altitude
(2) J79-GE-10 Engines
Maximum Thrust
(4) Sparrow AIM-7F (Modified)

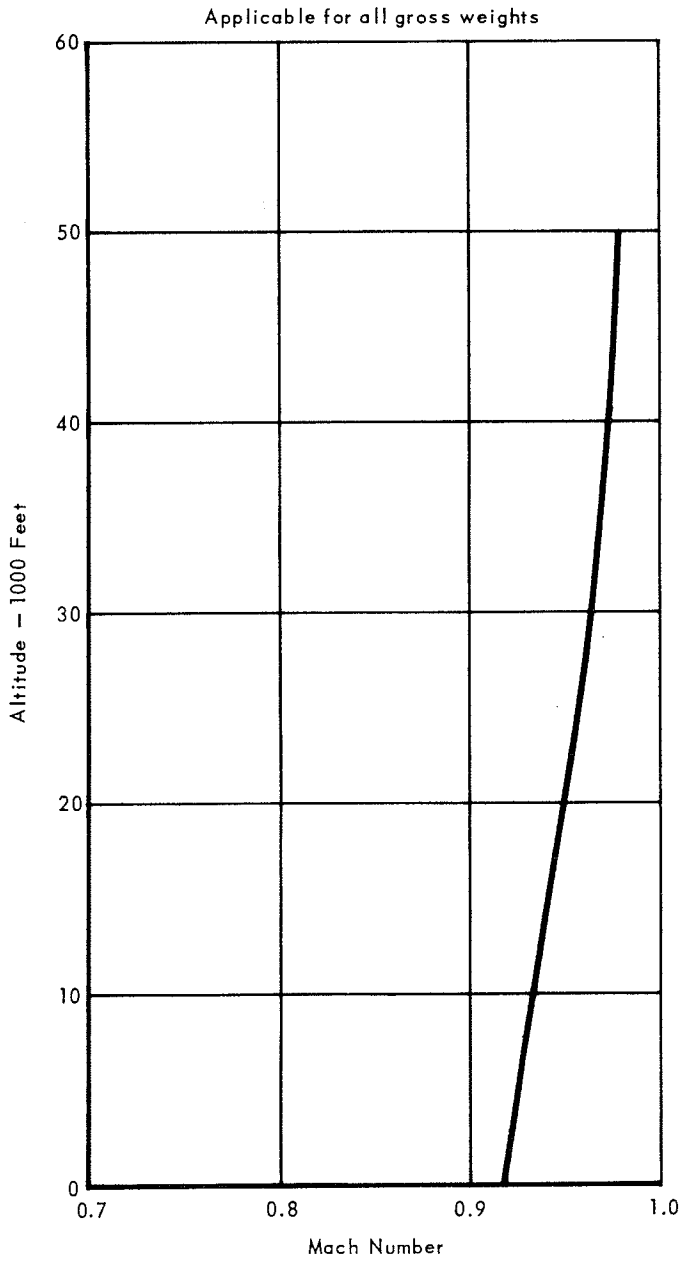

Figure 2

3.1.3 WEIGHTS. - Applicable.

3.1.3.1 GROSS WEIGHTS. - Applicable. The fighter gross weights are estimated to be as follows:

(1)	BASIC TAKEOFF (Four Sparrow Missiles AIM-7F (Modified) and 2514 gallons internal fuel.)	51,750 lbs.
(2)	ALTERNATE TAKEOFF (Four Sparrow Missiles AIM-7F (Modified) 2514 gallons internal fuel and 600 gallons external fuel.)	56,206 lbs.
(3)	SPECIAL WEAPON TAKEOFF (One - MK-28 Mod 0 and 2514 gallons internal fuel.)	51,877 lbs.
(4)	ALTERNATE SPECIAL WEAPON TAKEOFF (One - MK-28 Mod 0, 2514 gallons internal fuel and 1200 gallons external fuel.)	61,005 lbs.
(5)	BASIC COMBAT (Four Sparrow Missiles AIM-7F (Modified)and 1508 gallons internal fuel.)	44,912 lbs.
(6)	ALTERNATE SPECIAL WEAPON COMBAT (One - MK-28 Mod 0 and 1508 gallons internal fuel.)	45,039 lbs.
(7)	BASIC LANDING (Four Sparrow Missiles AIM-7F (modified) and 588 gallons internal fuel.)	38,655 lbs.
(8)	ALTERNATE ARMAMENT TAKEOFF (Six Sparrow Missiles AIM-7F (modified) and 2514 gallons internal fuel.)	53,230 lbs.
(9)	ALTERNATE ARMAMENT TAKEOFF (Four Sparrow Missiles AIM-7F (modified) plus four Sidewinder Missiles and 2514 gallons internal fuel.)	53,258 lbs.
(10)	ALTERNATE CONVENTIONAL WEAPON TAKEOFF (24 MK-81, Low Drag Bomb and 2514 gallons internal fuel.)	57,901 lbs.
(11)	ALTERNATE TAKEOFF MK-4 20 MM GUN POD (Four Sparrow Missiles AIM-7F (modified) plus MK-4 gun pod and 2514 gallons full internal fuel.)	53,242 lbs.
(12)	ALTERNATE COMBAT MK-4 20 MM GUN POD (Four Sparrow Missiles AIM-7F (modified) plus MK-4 gun pod and 1508 gallons internal fuel.)	46,404 lbs.

3.1.3.2 USEFUL LOAD.- Useful load shall consist of the crew, fuel, oil, armament, oxygen containers and oxygen, and miscellaneous equipment. The items listed in 3.1.3.2.5, 3.1.3.2.6.1 and 3.1.3.2.6.2 shall not be included in normal weight.

3.1.3.2.1 CREW.- The crew shall consist of the pilot and radar intercept officer.

3.1.3.2.2 PASSENGERS.- Not applicable.

3.1.3.2.3 FUEL.- Fuel shall consist of the following based on Spec MIL-F-5624E, Grade JP-5 weighing 6.8 lbs. per gallon.

(1)	Internal	2514 gals.
(2)	External, Fuselage (Not included in normal weight)	600 gals.
(3)	External, Wing (Not included in normal weight)	1200 gals.
(4)	Unusable, Internal Tanks	33 gals.

3.1.3.2.3.1 OXIDIZER.- Not applicable.

3.1.3.2.4 OIL.- Oil shall consist of the following:

(1)	Engine	13.2 gals.
(2)	Unusable	1.3 gals.

3.1.3.2.5 AUXILIARY (DROPPABLE) FUEL TANK INSTALLATION.- The auxiliary (droppable) fuel tank installation for external fuselage or external wing installation shall consist of the following useful load items:

(1)	One - Fuel Tank Installation, External Fuselage Tank (600 gallon)capacity) (CFE) Fuel (unusable) (2 gallons)	329.0 lbs.
	One - Aero 27A Ejector Bomb Rack (CFE)	47.0 lbs.
	Total	376.0 lbs.

3.1.3.2.5 (Continued)

(2) Two - Fuel Tanks, External Wing (600 gallon capacity each) 704 lbs.
Fuel (unusable) (2 gallons each) 28 lbs.

Two - Fuel Tank Pylons 236 lbs.

Total 968 lbs.

3.1.3.2.6 BASIC ARMAMENT INSTALLATION.- The armament installation shall consist of the following useful load items:

Four - Sparrow Missiles (AIM-7E) 1820.0 lbs.

or

Four - Sparrow Missiles (AIM-7F) (Modified) 1960.0 lbs.

3.1.3.2.6.1 ALTERNATE SPECIAL WEAPON INSTALLATION.- The weapon installation shall consist of the following useful load items:

One - MK-28 Mod 0 2040 lbs.

One - Aero 27A Ejector Bomb Rack 47 lbs.

Total 2087 lbs.

3.1.3.2.6.2 ALTERNATE MISSILE INSTALLATION.- The alternate armament installation shall consist of the following useful load items:

(1) Two - Sparrow Missiles (AIM-7F) (Modified) 980 lbs.

Two - Armament Pylons (Outboard) 244 lbs.

Two - MAU-9A/A Ejector Racks 156 lbs.

Two - Launchers 100 lbs.

Total 1480 lbs.

3.1.3.2.6.2 (Continued)

(2) Four - Sidewinder Missiles AIM-9D (190 lbs. ea.) 760 lbs.
or
Four - Sidewinder Missiles AIM-9B (155 lbs. ea.) 620 lbs.

Two - Armament Pylons and MAU-9A/A Racks	400 lbs.
Four - Launchers and Power Supplies (LAU-7/A)	348 lbs.
Total	1508 lbs.

3.1.3.2.6.3 ALTERNATE CONVENTIONAL WEAPON INSTALLATION.- The alternate conventional weapon installation shall consist of the following useful load items:

Twenty-four - MK-81 Low Drag Bombs	6480 lbs.
One - Aero 27A Ejector Bomb Rack	47 lbs.
One - Multiple Weapons Adapter Assy. (℄)	55 lbs.
Three - Multiple Ejector Racks (Douglas MER)	655 lbs.
Two - Triple Ejector Racks (Douglas TER)	190 lbs.
Two - Fuel Pylons (Inboard)	236 lbs.
Two - Armament Pylons (Outboard)	244 lbs.
Two - MAU-9A/A Ejector Racks (Outboard)	156 lbs.
Two - Weapon Adapters (Inboard)	48 lbs.
Total	8111 lbs.

3.1.3.2.6.4 ALTERNATE MK-4 20 MM GUN POD INSTALLATION.- The alternate MK-4 20 MM gun pod installation shall consist of the following useful load items:

One - MK-4 20 MM Gun Pod	787 lbs.
One - Aero 27A Ejector Rack	47 lbs.
One - Multiple Weapons Adapter (Centerline)	55 lbs.
750 - Rounds of Ammunition	603 lbs.
Total	1492 lbs.

3.1.3.2.7 OXYGEN EQUIPMENT INSTALLATION.- The oxygen equipment installation shall consist of the following item:

One -	Quick removable converter and oxygen, 10 liter system (GFAE)	46.0 lbs

3.1.3.2.8 PHOTOGRAPHIC EQUIPMENT INSTALLATION.- Not required.

3.1.3.2.9 MISCELLANEOUS EQUIPMENT INSTALLATION.- The miscellaneous equipment installation shall consist of the following items:

Two -	Pararaft Kit (Including emergency equipment) (GFAE)	28.0 lbs.
Two -	Survival Kit (GFAE)	60.0 lbs.
	Total	88.0 lbs.

3.1.3.2.10 CARGO INSTALLATION.- Not applicable.

3.1.3.2.11 UNIT WEIGHTS OF USEFUL LOAD ITEMS.- Applicable. The weight of fuel conforming to Spec MIL-F-5624E, Grade JP-5, shall be 6.8 pounds per gallon for the loading conditions shown below.

3.1.3.2.11.1 The weight of Grade JP-4 fuel conforming to Spec MIL-F-5624E, shall be 6.5 pounds per gallon when used as specified in 3.12.9.1.1.

3.1.3.2.11.2 The crew weight (each) used in calculating useful loads shall not exceed 215 pounds.

3.1.3.2.12 USEFUL LOAD CONDITIONS.

(1) BASIC TAKEOFF.- The useful load as a fighter with four Sparrow Missiles (AIM-7F) (modified) and full internal fuel shall be as follows:

USEFUL LOAD			19952 lbs.
CREW (2)		430	
FUEL		17319	
Internal (2514 gallons)	17095		
Unusable (33 gallons)	224		
OIL		109	
Engine (13.2 gallons)	99		
Unusable (1.3 gallons)	10		
ARMAMENT		1960	
Four Sparrow Missiles (AIM-7F) (modified)	1960		

3.1.3.2.12(1) (Continued)

OXYGEN EQUIPMENT		46	
MISCELLANEOUS EQUIPMENT		88	

(2) ALTERNATE TAKEOFF.- The useful load as a fighter with missiles, full internal fuel, and external fuselage fuel shall be as follows;

USEFUL LOAD			24408 lbs.
CREW (2)		430	
FUEL		21399	
Internal (2514 gallons)	17095		
Unusable (33 gallons)	224		
External ℄ (600 gallons)	4080		
TANK - External Fuel - ℄ + (Unusable Fuel)		329	
RACK - External Fuel Tank (Fuselage)		47	
OIL (Same as 3.1.3.2.12(1))		109	
ARMAMENT (Same as 3.1.3.2.12(1))		1960	
OXYGEN EQUIPMENT		46	
MISCELLANEOUS EQUIPMENT		88	

(3) SPECIAL WEAPONS TAKEOFF.- The useful load as a fighter with weapon and full internal fuel shall be as follows:

USEFUL LOAD			20079 lbs.
CREW (2)		430	
FUEL		17319	
Internal (2514 gallons)	17095		
Unusable (33 gallons)	224		
OIL (Same as 3.1.3.2.12(1))		109	
ARMAMENT		2087	
One MK-28 Mod 0	2040		
One Rack - Aero 27A	47		
OXYGEN EQUIPMENT		46	
MISCELLANEOUS EQUIPMENT		88	

(4) ALTERNATE SPECIAL WEAPON TAKEOFF.- The useful load as a fighter with weapon and overload fuel shall be as follows:

USEFUL LOAD			29207 lbs.
CREW (2)		430	
FUEL		25479	
Internal (2514 gallons)	17095		
Unusable (33 gallons)	224		
External (Ext. Wing Tanks) (1200 gallons)	8160		
TWO FUEL TANKS, PYLONS AND UNUSABLE FUEL		968	

3.1.3.2.12(4) (Continued)

OIL (Same as 3.1.3.2.12(1))		109	
ARMAMENT		2087	
One MK-28 Mod 0	2040		
One Rack - Aero 27A	47		
OXYGEN EQUIPMENT		46	
MISCELLANEOUS EQUIPMENT		88	

(5) BASIC COMBAT.- The useful load as a fighter with missiles and combat fuel shall be as follows:

USEFUL LOAD			13114 lbs.
CREW (2)		430	
FUEL		10481	
Internal (1508 gallons)	10257		
Unusable (33 gallons)	224		
OIL (Same as 3.1.3.2.12(1))		109	
ARMAMENT (Same as 3.1.2.3.12(1))		1960	
OXYGEN EQUIPMENT		46	
MISCELLANEOUS EQUIPMENT		88	

(6) ALTERNATE SPECIAL WEAPON COMBAT.- The useful load as a fighter with MK-28, Mod 0 weapon and combat fuel shall be as follows:

USEFUL LOAD			13241 lbs.
CREW (2)		430	
FUEL (Same as 3.1.3.2.12(5))		10481	
OIL (Same as 3.1.3.2.12(1))		109	
ARMAMENT (Same as 3.1.3.2.12(3))		2087	
OXYGEN EQUIPMENT		46	
MISCELLANEOUS EQUIPMENT		88	

(7) BASIC LANDING.- The useful load as a fighter with four Sparrow Missiles (AIM-7F) (modified) and landing fuel shall be as follows:

USEFUL LOAD			6857 lbs.
CREW (2)		430	
FUEL		4224	
Internal (588 gallons)	4000		
Unusable (33 gallons)	224		
OIL (Same as 3.1.3.2.12(1))		109	
ARMAMENT (Same as 3.1.3.2.12(1))		1960	
OXYGEN EQUIPMENT		46	
MISCELLANEOUS EQUIPMENT		88	

(8) ALTERNATE ARMAMENT TAKEOFF.- The useful load as a fighter with six Sparrow Missiles (AIM-7F) (modified)and full internal fuel shall be as follows:

3.1.3.2.12(8) (Continued)

USEFUL LOAD			21432 lbs.
CREW (2)		430	
FUEL (Same as 3.1.3.2.12(1))		17319	
OIL (Same as 3.1.3.2.12(1))		109	
ARMAMENT		3440	
Six - Sparrow Missiles (AIM-7F) (Modified)	2940		
Two - Wing Pylons (including Two - MAU-9A/A Racks)	400		
Two - Launchers	100		
OXYGEN EQUIPMENT		46	
MISCELLANEOUS EQUIPMENT		88	

(9) ALTERNATE ARMAMENT TAKEOFF.- The useful load as a fighter with four Sparrow Missiles (AIM-7F) (modified) plus four Sidewinder Missiles (AIM-9D) and full internal fuel shall be as follows:

USEFUL LOAD			21460 lbs.
CREW (2)		430	
FUEL (Same as 3.1.3.2.12(1))		17319	
OIL (Same as 3.1.3.2.12(1))		109	
ARMAMENT		3468	
Four - Sparrow Missiles (AIM-7F) (Modified)	1960		
Four - AIM-9D Sidewinder Missiles	760		
Four - LAU-7A Missile Launchers	348		
Two - Outboard Armament Pylons	244		
Two - MAU-9A/A Ejector Racks	156		
OXYGEN EQUIPMENT		46	
MISCELLANEOUS EQUIPMENT		88	

(10) ALTERNATE CONVENTIONAL WEAPON TAKEOFF.- The useful load with twenty-four MK-81 L.D. bombs and full internal fuel shall be as follows:

USEFUL LOAD			26103 lbs.
CREW (2)		430	
FUEL (Same as 3.1.3.2.12(1))		17319	
OIL (Same as 3.1.3.2.12(1))		109	
ARMAMENT		8111	
Twenty-four - MK-81 Low Drag Bombs	6480		
One - Aero 27A Bomb Rack	47		
One - Multiple Weapons Adapter Assy. (℄)	55		
Three - Multiple Ejector Rack (Douglas MER)	655		
Two - Triple Ejector Rack (Douglas TER)	190		
Two - Fuel Pylons (Inboard)	236		
Two - Armament Pylons (Outboard)	244		

3.1.3.2.12(10) (Continued)

Two - Weapon Adapters	48		
Two - Mau-9A/A Ejector Racks	156		
OXYGEN EQUIPMENT		46	
MISCELLANEOUS EQUIPMENT		88	

(11) ALTERNATE TAKEOFF MK-4 20 MM GUN POD.- The useful load as a fighter with missiles, full internal fuel, and MK-4 20 MM gun pod shall be as follows:

USEFUL LOAD			21444 lbs.
CREW (2)		430	
FUEL (Same as 3.1.3.2.12(1))		17319	
OIL (Same as 3.1.3.2.12(1))		109	
ARMAMENT (Same as 3.1.3.2.12(12))		3452	
OXYGEN EQUIPMENT		46	
MISCELLANEOUS EQUIPMENT		88	

(12) ALTERNATE COMBAT MK-4 20 MM GUN POD.- The useful load as a fighter with MK-4 20 MM gun pod, four fuselage mounted Sparrow Missiles (AIM-7F) (modified) and combat fuel shall be as follows:

USEFUL LOAD			14606 lbs.
CREW (2)		430	
FUEL (Same as 3.1.3.2.12(5))		10481	
OIL (Same as 3.1.3.2.12(1))		109	
ARMAMENT		3452	
Four - Sparrow Missiles (AIM-4F)	1960		
One - MK-4 20 MM Gun Pod	787		
750 - Rounds of Ammunition	603		
One - Aero 27A Ejector Bomb Rack	47		
One - Multiple Weapon Adapter (Centerline)	55		
OXYGEN EQUIPMENT		46	
MISCELLANEOUS EQUIPMENT		88	

3.1.3.3 WEIGHT EMPTY (GUARANTEED).- The guaranteed weight with J79-GE-10 engines shall be as specified herein and shall consist of subitems estimated to be as follows:

WEIGHT EMPTY (Guaranteed)			31798 lbs.
WING GROUP		5948	
TAIL GROUP		1008	
BODY GROUP		5814	
ALIGHTING GEAR - LANDING TYPE		2062	
SURFACE CONTROLS GROUP		1289	
ENGINE SECTION GROUP		149	
PROPULSION GROUP		10262	
Engine Instal. (Incl. Afterburners)	7600		
Air Induction System	1272		
Lubricating System	95		
Fuel System	1186		
Engine Controls	47		
Starting System	62		
INSTRUMENTS AND NAVIGATIONAL EQUIMMENT GROUP		188	
HYDRAULIC AND PNEUMATIC GROUP		438	
ELECTRICAL GROUP		490	
ELECTRONICS GROUP		2245	
ARMAMENT GROUP		488	
FURNISHINGS AND EQUIMMENT GROUP		493	
AIR CONDITIONING AND ANTI-ICING EQUIPMENT GROUP		319	
Air Conditioning	319		
AUXILIARY GEAR GROUP		380	
CONTINGENCY		225	

3.1.4 CENTER-OF-GRAVITY LOCATIONS.- Center-of-gravity locations are estimated to be as follows: (Not to be used for inspection purposes.)

Condition	Wing Position	Wheels	Gross Weight	Horizontal C.G. Fus. Sta.	Vertical Water Line
Combat - Basic	70°	Up	44912	331.3	35.3
Landing - Basic	23°	Down	38655	323.1	32.7
Most Forward C.G.	23°	Up	40673	318.6	33.4
Most Aft C.G.	70°	Up	51730	335.6	37.2

NOTES: Most Forward cg is attained with the wing in the 23° position, 590 gallons of fuel in tanks, 2 upper and 2 lower; (6) LAU-10A at B.L. 91.2 stations and no Sparrow missiles.

Most Aft cg is attained with the wing in the 70° position, (2) AIM-7F missiles at the outboard wing stations, 15595 pounds internal fuel and (4) AIM-7F fuselage mounted missiles.

3.1.5 AREAS.- The areas are estimated to be as follows. (Not to be used for inspection purposes.)

Wing area, Total (Theoretical)	
Unswept (outer-wing LE at 23°) including ailerons and flaps (extended to ℄, excluding inner wing)	420 sq ft
Unswept (outer-wing LE at 23°) including ailerons and flaps (Theoretical outer and inner wing, extended to ℄)	576 sq ft
Swept (outer-wing LE at 70°), including ailerons and flaps	528 sq ft
Trailing edge flaps (doubled slotted) area, total, including vanes.	85.9 sq ft
Aileron (single slotted flap) area, total	9.8 sq ft
Spoiler area, total	22.60 sq ft
Leading edge slat area, total	28.00 sq ft
Speed brake area, total	21.70 sq ft
Horizontal tail area, total	138.20 sq ft
Vertical tail area (theoretical, above WL 66.50), total	67.50 sq ft
Fin area, to rudder hinge (including fixed portion aft of hinge)	56.43 sq ft
Rudder area, aft of hinge	11.07 sq ft

3.1.6 DIMENSIONS AND GENERAL DATA.- The dimensions and general data of the aircraft are estimated to be as follows: (Not to be used for inspection purposes.)

Wings:	
Span, maximum (unswept, outer-wing LE at 23°)	55 ft 0 in
Span, swept to deck spotting position (outer wing LE at 75.5°)	31 ft 3.6 in
Chord:	
At theoretical root (centerline of aircraft) (outer wing LE at 23°)	147.0 in
At construction tip (theoretical extended section at tips) (outer-wing LE at 23°)	36.5 in
Mean aerodynamic, theoretical outer-wing LE at 23°)	102.8 in
Section:	
At construction tip (theoretical extended section at tip) (outer-wing LE 23°)	NACA 64A008.5; 230(Mod)

3.1.6 (Continued)

At BL 119.039 (theoretical without lower surface thickness transition) Outer-wing LE at 23°	NACA 64A009.12;230 (Mod)
Incidence	+0.75 deg
Sweepback (at leading edge)	23 deg to 70 deg
Deck spotting position	75.5 deg
Dihedral	-2.0 deg
Twist, at tip (nose down)	-2.5 deg
Aspect ratio, wing spread with LE at 23°	7.2

Aileron:

Span	10 ft
Chord (average percent of wing chord)	16.2%
Position of hinge (average percent of wing chord)	83.8%

Spoiler:

Span	19 ft 6 in
Chord (Average percent of wing chord)	17.2%
Position of leading edge (average percent of wing chord)	66.8%

High lift devices:

Leading edge slats:

Span (percent of wing span)	62.0%
Chord (percent of wing chord)	14.0%

Trailing edge flaps:

Span (percent of wing span)	75.0%
Chord of flap (percent of wing chord)	25.0%
Chord of vane (percent of wing chord)	7.5%

Tail:

Horizontal:

Span (along WL)	21 ft 5.6 in
Chord at root	128.5 in
Chord at tip	26.0 in
Section:	
At root	NACA 0004-64 (Mod)
At tip	NACA 0003-64 (Mod)
Aspect ratio	3.33
Dihedral	0 deg

Vertical:

Chord at root (WL 66.50)	207.19 in
Chord at tip (WL 143.00)	47.10 in
Section:	
At root	NACA 0004-64 (Mod)
At tip	NACA 0002.5-64(Mod)
Aspect ratio (theoretical)	0.602

3.1.6 **(Continued)**

Height, static ground line level (51,750 lbs.; tire pressure 260 psi)	
Over tail	16 ft 0.5 in
Over fuselage	10 ft 7.5 in
Maximum height (51,750 lbs.; tire pressure 260 psi)	
Airplane in normal static position (over vertical tail)	16 ft 0.5 in
Airplane in static position with all shock absorbers under static deflection and any one tire flat	16 ft 2.8 in
Airplane passing over 3-1/2 in high hanger door sill)	16 ft 8.0 in
Airplane jacked up to change any landing gear wheel	16 ft 6.2 in
Length, maximum, static ground line level (weight 51,750 lbs)	58 ft 5.9 in
Static ground angle with reference to WL 0.0 (weight 51,750 lbs)	0 deg
Wheel size:	
Main wheels	32x11.5-14.5
Nose wheels (dual)	18x5.7-8.0
Casing type:	
Main wheels	VIII
Nose wheels	VII
Casing ply rating:	
Main wheels	28
Nose wheels	14
Wheel base (51,750 lbs static)	21 ft 6.5 in
Tread of main wheels (51,750 lbs static)	11 ft 8.0 in
Vertical travel of axle from extended to fully compressed strut position:	
Main wheels	20.0 in
Nose wheels	21.0 in
Angle between the ground plane, static deflection of 1W, and a plane defined by the most critical cg for turnover and the points of contact of nose and main wheel tires	54°
Angle between a line through the cg of the unfueled airplane, outer-wing swept to the deck spotting position, six Sparrow missiles installed, crew member in forward cockpit, without survival kit and oxygen and ground contact point of the main wheel tire and vertical line through the ground contact point of the main wheel tire static deflection of 1W	$15^{\circ}56'$

3.1.7 CONTROL SURFACE AND CORRESPONDING CONTROL MOVEMENTS.- Control surface movements shall be approximately as follows: (Not to be used for inspection purposes.)

Leading edge slats	12.7° down
Ailerons	0° up; 30° down
Spoilers	45° up
Trailing edge flaps, double slotted	50° down
All movable horizontal tail (with respect to wing reference plane)	9° LE up; 21° LE down
Speed brakes	54° full open
Rudder	30° right; 30° left

3.2 GENERAL.- The general arrangement of the airplane shall be in accordance with McDonnell DWG * .

3.2.1 GENERAL INTERIOR ARRANGEMENT.- The interior arrangement shall be in accordance with McDonnell DWG * .

3.2.2 SELECTION OF MATERIALS AND STANDARD PARTS.- Applicable, except as otherwise stated herein.

(1) REINFORCED PLASTICS.- The use of reinforced plastics in structural parts shall be subject to the specific approval of NAVAIRSYSCOM. Reinforced plastics may be used in noncritical, nonstructural parts subject to the approval of the NAVPLANTREPO.

(2) FOAMED-IN-PLACE CORE CONSTRUCTION.- The use of foamed-in-place core construction in structural parts shall be subject to the specific approval of NAVAIRSYSCOM. Foamed-in-place core construction may be used in non-critical, nonstructural parts subject to the approval of the NAVPLANTREPO.

3.2.2.1 MATERIALS.

3.2.2.1.1 MINIMUM GAGE OF METALS (STRUCTURAL APPLICATIONS).- Applicable for other than sandwich or welded skin construction, except that the gage of Titanium shall be .010 inches.

3.2.2.1.2 STEELS.

3.2.2.1.2.1 SELECTION OF STEELS.- Applicable, except in Paragraph "a" delete 220,000 and substitute 240,000, and in Paragraph "h" straightening of parts after heat treatment shall be as specified in McDonnell P.S. 20009 as approved by NAVPLANTREPO.

3.2.2.1.2.2 CORROSION-RESISTANT STEELS.- Applicable.

3.2.2.1.3 ALUMINUM ALLOYS.- Unclad 2024, 7075, 7079, or 7178 aluminum alloy shall be used subject to the following restrictions:

(a) Exterior surfaces shall be painted.

(b) Where spot welding is performed the material combination requirements of Spec MIL-W-6860 shall be observed.

3.2.2.1.3 (Continued)

(c) Leading edges shall be clad unless other acceptable means of protection can be demonstrated.

Aluminum alloys 7079 and 7178 may be used in applications similar to those in the model F-4J airplane. Aluminum alloys 7079 and 7178 may be used in other applications subject to specific approval of NAVAIRSYSCOM.

3.2.2.1.4 MAGNESIUM ALLOYS.- Magnesium alloys shall not be used unless significant weight saving or other advantage is obtained thereby. When the advantage of using magnesium is not obvious, the contractor shall furnish justification, including all pertinent factors, such as additional weight of finish and provision for regular inspection for corrosion without undue disassembly of the structure. All magnesium alloy applications in Naval airplanes shall be subject to NAVAIRSYSCOM approval, except that noncritical, nonstructural and readily accessible magnesium alloy applications not exposed to severely corrosive conditions may be approved by the NAVPLANTREPO. Aluminum alloy 5056 rivets only shall be used for riveting magnesium alloy parts. Other fasteners shall be selected or insulated as indicated in Spec MIL-F-7179B. Magnesium alloys shall be treated in accordance with Spec MIL-M-3171 or MIL-M-45202.

3.2.2.1.5 DELETED (Per SD-24J-1)

3.2.2.1.6 CASTINGS.- Applicable.

3.2.2.1.7 FITTINGS.- Applicable, except that Spec MIL-F-7179A shall apply, and delete last paragraph.

3.2.2.1.7.1 THREADS FOR FITTINGS.- Applicable, except that threads shall be in accordance with Spec MIL-S-7742 or MIL-S-8879.

3.2.2.1.8 ELASTOMERIC MATERIALS.- Applicable, except delete last sentence.

3.2.2.1.9 FOAMED PLASTICS.- Applicable.

3.2.2.1.10 LEATHER.- Applicable.

3.2.2.2 STANDARD PARTS.- Applicable.

3.2.2.2.1 BUSHINGS.- Applicable.

3.2.2.2.2 BEARINGS.- Applicable, except that Spec MIL-F-18372 shall apply only to the extent specified in 3.10. Add: piano type hinges may be used subject to the provisions of 3.2.2.2.10. The inner race of control surface bearings need not be made a press fit on the bolt. Close tolerance bolts shall be used to hold minimum clearance between the bolt and the inner race.

3.2.2.2.2.1 PLAIN BEARINGS.- Applicable, except that Spec MIL-F-18372 shall apply only to the extent specified in 3.10. Insert type spherical bearings shall not be used in applications involving high stress reversals since pounding out of the inserts frequently results from such installations.

3.2.2.2.2.2 CONTROL SURFACE HINGE BEARINGS.- Applicable, except that piano type hinges may be used subject to the provisions of 3.2.2.2.10.

3.2.2.2.2.3 BEARING SEALS.- Applicable.

3.2.2.2.3 BOLTS.- Bolts heat treated from 160,000 psi to 180,000 psi shall be in accordance with Spec NAS498 or MIL-B-7838 depending on bolt configuration and intended function. Bolts heat treated from 180,000 psi to 200,000 psi shall be in accordance with NAS496 or NAS498 as applicable and amended by the requirements of the drawing, or MIL-B-8831 depending on bolt configuration and intended function. High strength bolts of greater than 200,000 psi ultimate tensile strength may be used subject to NAVAIRSYSCOM approval. Corrosion resistant steel bolts in temperatures from 800°F to 1200°F shall be in accordance with AMS7478 or MIL-B-7874 as applicable. High strength blind bolts may be used provided that these fasteners are in accordance with Spec NAS1675 and Standards NAS1669 through 1674 as approved by NAVAIRSYSCOM. Requirements for the use of an aluminum washer to insulate cadmium plated steel bolts from aluminum skin are not applicable for flush head bolts and screws.

3.2.2.2.3.1 CLOSE TOLERANCE BOLTS.- Applicable. Close tolerance bolts NAS1303 through NAS1320 and NAS583 through NAS590 may be used. Sheet 3, Column A of NAS618 shall not apply. The following table indicates the maximum and minimum hold diameters to be used with close tolerance bolts.

NOMINAL DIMENSION	MAX.	HOLE DIAM.	MIN.
.1900	.1915		.1900
.2500	.2515		.2500
.3125	.3140		.3125
.3750	.3765		.3750
.4375	.4390		.4375
.5000	.5015		.5000
.5625	.5640		.5625
.6250	.6265		.6250
.7500	.7515		.7500
.8750	.8765		.8750
1.0000	1.0015		1.0000
1.1250	1.1270		1.1250
1.2500	1.2520		1.2500
1.3750	1.3770		1.3750
1.5000	1.5020		1.5000
1.6250	1.6270		1.6250

3.2.2.2.3.2 SAFETY BOLTS.- Applicable, except delete last two sentences.

3.2.2.2.3.3 SELF-LOCKING BOLTS.- Applicable, except delete MIL-F-18240 and substitute MIL-F-18240A.

3.2.2.2.3.4 ADJUSTABLE STOP BOLTS.- Applicable.

3.2.2.2.3.5 BOLT THREADS IN BEARING.- The shanks of all structural bolts in shear shall be of such length that no threads are in bearing based on the nominal bolt grip length and the nominal part thickness. A maximum of three washers may be used to make up the difference where the minimum grip of the length bolt is slightly greater than the thickness of the material to be bolted. If insulating washers are used only two additional washers are permitted. "Insulated" shall be interpreted to mean: "A means to prevent the turning surface of cadmium plated bolts and/or nuts from contacting and galling aluminum parts." No insulating washer shall be provided under the head of flush bolts.

3.2.2.2.4 PINS.- Applicable.

3.2.2.2.4.1 SPRING PINS.- Applicable.

3.2.2.2.5 SCREWS.- Applicable, except delete Spec MIL-F-18240 and substitute Spec MIL-F-18240A(ASG). Delete DWG AND10087 and substitute DWG MS33749. Delete last two sentences.

3.2.2.2.6 NUTS.- Applicable.

3.2.2.2.6.1 SELF-LOCKING NUTS.- Self-locking nuts of approved type in accordance with Spec MIL-N-25027 (800°F temperature maximum) may be used subject to the restrictions of MS33588. Self-locking nuts in temperatures 800°F to 1200°F shall be in accordance with Specification MIL-N-7873. High-strength self-locking nuts for internal wrenching bolts or other similar 160,000 psi minimum ultimate tensile strength bolts or studs shall be external wrenching 12-point configuration nuts, barrel nuts, or similar nuts which will develop the full rated tensile strength of the bolt. MS17825 combination castellated self-locking nuts used on primary control system components, which are subject to frequent disconnection, shall be as approved by NAVAIRSYSCOM. In addition, combination castellated self-locking nuts may be used in other areas in accordance with MS17825(WEP).

3.2.2.2.6.2 SHEET SPRING NUTS.- Applicable, except that Spec MIL-N-3337 and MS33538 shall apply.

3.2.2.2.7 FASTENERS, TITANIUM AND TITANIUM BASE ALLOYS.- Approved Titanium and Titanium alloy fasteners may be used.

3.2.2.2.8 RIVETS.- Applicable, except AN426 shall apply in lieu of MS20426. Hollow rivets may be used in the attachment of secondary structures not subject to corrosive conditions.

3.2.2.2.8.1 BLIND RIVETS.- Aluminum alloy and Monel, or equivalent, blind rivets in accordance with Spec MIL-R-7885, MIL-R-8814 or NAS1400; Bulbed Cherrylock, or equivalent, rivets conforming to McDonnell DWG 3M266 and 2M267, and McDonnell Spec 23M106; and steel blind rivets may be used subject to the restrictions of DWG MS33522, except that NAVPLANTREPO shall be authorized to approve the use of blind fasteners in other than blind applications where:

(1) The installation of a conventional fastener would impair production efficiency.

(2) The installation of a blind fastener will not adversely affect performance or reliability of the assembly or equipment.

Design load allowables shall be in accordance with MIL-HDBK-5, except that sheet combinations not listed in MIL-HDBK-5 shall be as accepted by NAVAIRSYSCOM. Additional applications not listed in MIL-HDBK-5 shall be established in a manner acceptable to NAVAIRSYSCOM.

3.2.2.2.8.2 FASTENERS, BLIND, NONHOLE-FILLING.- Applicable, except that MS25420 shall apply.

3.2.2.2.8.3 STAINLESS HI-SHEAR RIVETS.- The following stainless steel Hi-Shear rivets, HS61, HS62, HS67, and HS68 may be used in accordance with the restrictions in 3.2.2.2.8.2 and the following:

(1) These pins shall be coated with zinc chromate primer before assembly and both ends shall be touched up after assembly as necessary to comply with the general airplane finish schedule applicable to nuts, bolts, screws, and other attaching parts. If subject to temperature above 400°F, these pins shall be used in locations where the environment is noncorrosive. This is to reduce the possibility of stress corrosion.

3.2.2.2.8.4 LOCKBOLTS.- Lockbolts may be used in accordance with the following restrictions:

(1) Lockbolts may be used in applications in which the lockbolts would not normally be subject to removal. For those applications which may be subject to repair or replacement, adequate provision shall be made to permit replacement of the lockbolt by an internal wrenching bolt, by a bolt in the NAS334-336 series, or by any other similar standard high strength fastener. Lockbolts shall not be used in attaching those items or parts which may be replaced frequently by field activities.

3.2.2.2.8.4 (Continued)

(2) Painting prior to assembly is not required, but each end shall be touched up with zinc chromate primer as necessary to comply with the general airplane finish schedule applicable to nuts, bolts, and other attaching parts.

(3) Washers, AN960, may be used in conjunction with lockbolts when the lockbolt grip is longer than the total material thickness provided that aluminum alloy washers are used in conjunction with aluminum sheet, and steel washers are used in conjunction with steel sheet, except that in smaller sizes, steel washers may be used with aluminum sheet.

3.2.2.2.9 WASHERS.- Applicable.

3.2.2.2.10 HINGES (PIANO-TYPE).- Piano-type hinges shall be in accordance with DWG MS20257 and MS20001. Consideration shall be given in the selection of piano-type hinges to ease maintenance and replacement of the hinge pins. Extreme length hinges shall be avoided or split into several segments for ease of maintenance. Extruded piano-type hinges not interchangeable with AN257 and MS20001 may be used in applications for which AN257 and MS20001 are not suitable.

3.2.2.3 NONSTANDARD PARTS.- Applicable, except that MIL-STD-143A shall apply.

3.2.3 WORKMANSHIP.- Applicable.

3.2.4 PRODUCTION, MAINTENANCE, AND REPAIR.

3.2.4.1 PRODUCTION.- Applicable, except delete: "The airplane shall have sufficient structural integrity to maintain buoyancy for a period of ten minutes after impacting at normal glide angle and 110 percent of takeoff speed."

3.2.4.1.1 DESIGN FOR SHIPMENT.- Applicable, except that Spec MIL-C-6057 shall apply.

3.2.4.1.2 METAL CONSTRUCTION.- Applicable.

3.2.4.1.2.1 STRESS CORROSION FACTORS.- Applicable, except delete the sentence: "In no case shall sustained/or residual surface tensile stresses in these materials exceed 50 percent of the material specification minimum yield strength in the longitudinal grain flow direction, 35 percent of the minimum yield strength in the long transverse direction and 25 percent of the minimum yield strength in the short transverse direction."

3.2.4.1.2.2 FATIGUE FACTORS.- See 3.4.1.1.7.

3.2.4.1.2.3 CORROSION PROTECTION.- Applicable, except delete MIL-F-7179 and substitute MIL-F-7179B and MIL-F-18264C, except as specified herein and in McDonnell Finish Spec 32-90000 and McDonnell PS13415 approved by NAVAIRSYSCOM. All crevices in exterior locations, faying surfaces with edges leading to an exterior surface, and wheel wells shall be filled or sealed with an approved sealing compound. All moldline permanent fasteners shall be installed using wet sealant on the fasteners. Control surfaces and lower surfaces of the airplane below the wing chord line shall not be filled or sealed with sealing compound.

Air intake openings shall be equipped with water drains where necessary. Diffused nickel cadmium plating may be used for high temperature protection of steel parts provided damage does not occur when these plated parts contact materials such as stainless steel and titanium at high temperatures and under stress. Diffused nickel cadmium plating shall comply with McDonnell Process Spec 13107.

3.2.4.1.3 WOOD CONSTRUCTION.- Not applicable.

3.2.4.1.4 ADHESIVE-BONDED CONSTRUCTION.- Applicable.

3.2.4.1.5 SANDWICH CONSTRUCTION.- Applicable.

3.2.4.1.6 STRETCHED ACRYLIC PLASTIC CONSTRUCTION.- Applicable.

3.2.4.1.7 METAL COVERING.- Applicable.

3.2.4.1.8 WOOD AND FABRIC COVERING.- Applicable.

3.2.4.1.9 CONTROL-SURFACE COVERING.- Applicable.

3.2.4.1.10 FLUSH RIVETING.- Applicable.

3.2.4.1.11 WELDING.- Applicable.

3.2.4.1.12 BRAZING.- Applicable.

3.2.4.1.13 SOFT SOLDERING - Applicable.

3.2.4.1.14 HEAT TREATMENT.- Applicable, except straightening of parts hardened to tensile strengths above 200,000 psi shall be accomplished in accordance with McDonnell Process Spec 20009 as approved by NAVPLANTREPO.

3.2.4.1.15 TOLERANCE OF INTERFERENCE FITTED PARTS.- Applicable, except that tolerances on interference fitted parts such as bushings or bearings to be pressed into high strength aluminum alloys or other materials susceptible to stress corrosion cracking shall not cause sustained surface tensile stresses greater than 50 percent of the material yield strength in the longitudinal grain direction, 35 percent of the material yield strength in the long transverse grain direction and 25 percent of the material yield strength in the short transverse grain direction. Particular attention shall be given to such parts to minimize the hazard of stress corrosion damage.

3.2.4.1.16 TURNBUCKLE SAFETYING.- Applicable, except that MS33736 shall apply vice NAS1074.

3.2.4.1.17 CABLE ASSEMBLIES.- Applicable, except delete MIL-HDBK-5 and substitute Bulletin ANC-5. Delete the last sentence.

3.2.4.1.18 SCREW THREADS.- Applicable, except that Spec MIL-S-7742 shall shall apply. Pipe threads, when used, shall be in accordance with Spec MIL-P-7105. The use of pipe threads shall be kept to a minimum, and if practicable should be avoided entirely in favor of straight threads. Class 3B may be substituted wherever Class 3 internal threads are specified.

3.2.4.1.18.1 THREADED HOLES AND THREAD INSERTS.- Applicable, except delete last sentence and substitute: The tapping of threads into other parts of the airframe not subject to qualification testing shall require approval of NAVPLANTREPO. Approved-type replaceable metal inserts shall be used in tapped holes in aluminum or magnesium alloy parts or joints subject to frequent removal. Aluminum or magnesium alloy parts and joints employing tapped holes not equipped with approved-type replaceable metal inserts shall have sufficient material provided in the region of the hole to permit safe rework of the part or joint to the next larger standard screw or bolt size or for installation of a replaceable metal insert.

3.2.4.1.19 HOLES (RIVETS, BOLTS AND PINS).- Holes for structural rivets (except Hi-Shear rivets), bolts, and pins may be punched or drilled. Holes for Hi-Shear rivets may be drilled or reamed. Holes for close fitting bolts and close fitting Hi-Shear rivets may be reamed. All holes shall be clean-cut and shall show no evidence of deformation at the periphery.

3.2.4.1.20 REMOVAL OF FOREIGN MATERIAL.- Applicable.

3.2.4.1.21 FOOL PROOFNESS.- Applicable.

3.2.4.1.22 SAFETYING.- Applicable.

3.2.4.2 MAINTENANCE AND REPAIR.- Maximum operating intervals between routine periodic maintenance inspections shall be provided. With the exception of the daily/preflight inspections, the minimum routine inspection interval for the airplane shall be 152 flight hours or 22 weeks. Maximum ease of removal and replacement shall be provided for wings, tail surfaces, armament, electrical equipment, electronic equipment, alighting gear, control surfaces, control cables, instruments, and all other parts that require periodic or frequent replacement, or that may, by their nature and location, be subject to occasional damage or corrosion. The engine, including accessories, shall be rapidly removable and replaceable as a unit with a minimum disturbance of fittings and connections. Engines, plus mounts when detachable, shall be rapidly removable and replaceable. During engine removal the engine may be supported with a dolly, however, jacking of the airplane shall not be required. (For engine quick change unit adapters, see 3.23.2.7.) Maximum accessibility shall be provided for parts requiring adjustment, rigging, or for test or check points, with prime emphasis placed on daily inspections requiring minimum man-minutes to determine operational serviceability.

3.2.4.2.1 ACCESSIBILITY OF ENGINE ACCESSORIES.- Applicable.

3.2.4.2.2 ACCESSIBILITY OF INSTRUMENTS, AUTOMATIC PILOT, AND ELECTRICAL EQUIPMENT.- Applicable.

3.2.4.2.3 ACCESSIBILITY OF ELECTRONIC EQUIPMENT.- Applicable.

3.2.4.2.4 DOORS AND REMOVABLE SECTIONS.- Access doors, removable sections, or equivalent shall be provided for inspection, lubrication, servicing of engine and accessories, drainage, removal of corrosion deposits, adjustment, refinishing, and replacement of parts as required. Doors shall furnish an adequate view of the parts to be inspected and provide ample access to parts involved to permit disconnection and removal of a part without having to remove other parts or units not affected, where practicable. Doors shall be externally smooth, splashtight, readily opened, and securely closed by approved type fasteners. Transparent windows may be used subject to NAVAIRSYSCOM approval. Doors shall be so designed that air blast cannot get under the edges and tear them off. Doors shall be hinged on all airplanes so as to close by gravity or by action of air loads in flight, where practicable. Hinged doors shall be secured in the open position for maintenance use. Access doors or panels for interior structure, compass, compartment, fuel tanks, electric motors, surface controls, and other parts requiring infrequent inspection need not be hinged. Doors or panels which are not hinged shall be attached to the airplane with cables except where the size of the door or panel makes this provision impracticable. Doors, removable sections, or similar parts shall be made load-carrying wherever practicable if significant weight savings can be accomplished thereby. When such doors are subject to

3.2.4.2.4 (Continued)

extreme temperature variations, such as jet-engine access doors or panels, in which the resultant thermal distortion will make assembly difficult, threaded tapered fasteners or other compensating assembly devices shall be utilized to simplify assembly and reduce maintenance. Form-in-place sealing, in accordance with McDonnell Process Spec 11205, shall be provided around access doors, where necessary. Load-carrying doors may be used where removal is necessary for periodic inspection. Readily operated approved flush-type fasteners of corrosion-resistant construction shall be used to secure cowling, doors and covers which must be opened at frequent intervals. High strength quick release fasteners of NAVAIRSYSCOM approved type may be used. (See 3.1.15 of Spec MIL-A-8861)

3.2.4.2.5 STEPS - HANDGRIPS.- Steps and handgrips shall be provided for access to the tandem cockpit. Normal entry into the cockpit is by means of retractable boarding steps and two kick-in steps located on the left side of the forward fuselage. The kick-in steps shall be in accordance with McDonnell DWG * . The retractable steps are lowered by a release in the lower kick-in step. The retractable boarding steps must be manually retracted. An indicator for the retractable steps shall be provided in the pilot's cockpit. Steps shall be equipped with flush-type self-closing doors. These steps shall be so located to prevent damage to equipment, cables, tubing etc., from the user's hands and feet. Steps and handgrips shall be subject to the drainage requirements of 3.2.4.1.2.3.

3.2.4.2.6 TIME ALLOWANCES FOR REPLACEMENT OF ITEMS.- Applicable. The maximum time to remove and replace, but not adjust the required items shall be in accordance with SD-24J, Change 1, except as specified below. In estimating the replacement items it is assumed that a full set of tools, handling equipment, and trained personnel will be available.

	Number of Men	Elapsed Hours
LE Slats each (outer wing)	2	1.2
TE Flaps		
Outboard	2	2.5
Ail/Flap Combo	2	2.5
Center Inboard	2	2.5
Inboard	2	3.5
All Movable Horizontal Stab	2	3.0
Rudder	2	1.0
Main Gear	3	4.0
Nose Gear	2	4.0
Fuel Pump	1	3.0
Fuel Control	1	8.0

3.2.4.2.6 (Continued)

	Number of Men	Elapsed Hours
Oil Filter (Each)	1	2.0
Fuel Tank (Any Individual, Average)	2	10.0
Cables for Main Control Surfaces	2	6.1
Bomb Rack or Shackle (Aero 27A)	2	1.0
Arresting Gear	2	.8
Ignitor	1	.2

3.2.5 INTERCHANGEABILITY AND REPLACEABILITY.- Parts and assemblies of a given model of airplane (or models in the same series) of production airplanes, exclusive of service test and flight test airplanes, shall be interchangeable or replaceable in accordance with Spec MIL-I-8500A, except as specified in the interchangeability-replaceability working list as finally approved.

3.2.6 FINISH.- The airplane and airplane parts shall be finished in accordance with Specs MIL-F-7179B and MIL-F-18264C, except as specified herein and McDonnell Finish Spec 32-90000 and McDonnell PS 13415 approved by NAVAIRSYSCOM. The exterior surfaces of the airplane shall be given an approved surface pretreatment as specified below. Sanding surfacer and sanding shall not be required and waxing shall not be employed, but rubbing compound and buffing may be employed. The exterior color scheme shall be as specified in 3.2.6.1. An epoxy-amine paint system conforming to McDonnell Material Specification 405 shall be applied in accordance with McDonnell Process Spec 13415, to all surfaces exposed to the exterior as defined by the Spec MIL-F-7179B and the contractors finish specification approved by NAVAIRSYSCOM. The minimum thickness of the epoxy primer/epoxy topcoat system shall be .0017 inches and the maximum thickness shall be .0021 inches, exclusive of precoat primer when used or the extra coat of white required for hiding shall be in accordance with McDonnell Process Spec 13415 as approved by NAVAIRSYSCOM.

Aluminum alloys which form exterior surfaces of the airplane shall be anodized in accordance with Spec MIL-A-8625 and/or surface treated in accordance with Spec MIL-C-5541. Shaved or abraded areas of aluminum alloy shall be touched up with Spec MIL-C-5541 treatment approved by the NAVAIRSYSCOM. Magnesium alloys shall be surface treated in accordance with Spec MIL-M-3171 or MIL-M-45202.

3.2.6.1 EXTERIOR COLOR.- Exterior color shall be in accordance with Spec MIL-C-18263E(WEP) and McDonnell DWG 32-00015, except that the rudder shall be painted a glossy white.

3.2.6.2 INTERIOR COLOR.- Interior color shall be in accordance with Spec MIL-C-8779B(WEP) and the finish specification as approved by NAVAIRSYSCOM.

3.2.6.3 INSIGNIA AND MARKINGS.- Insignia and markings shall be in accordance with Spec MIL-I-18464(AER), and DWG MS33739(ASG), Rev. A with applicable NATO numbers per ABC Air Standard 11/1C, except as shown on McDonnell DWG 32-00014. Those applied by painting shall be in accordance with McDonnell Process Spec 13415 as approved by NAVAIRSYSCOM.

3.2.6.3.1 RESCUE ARROW FOR COCKPIT EMERGENCY GROUND ENTRANCE HANDLE. - A rescue arrow shall be painted on the port side of the airplane fuselage to point directly to the pneumatic emergency

3.2.6.3.1 (Continued)

entrance handle. Additional instructional marking on the starboard side of the airplane shall be provided to direct rescue personnel to the port side emergency handle. Arrows shall be painted by the contractor until the arrows are procured by the Government and carried as a standard stock item.

3.2.7 IDENTIFICATION AND MARKING.

3.2.7.1 IDENTIFICATION OF EQUIPMENT, ASSEMBLIES, AND SPARES.- Equipment, assemblies, and spares shall be identified in accordance with Specs MIL-P-8651(AER) and MIL-STD-130A, except that the airplane contract number may be omitted from the identification plates. The basic model designation (F-4) in lieu of the complete model designation (F-4(FVS)) shall be required on identification plates.

3.2.7.2 AIRPLANE NAMEPLATE.- Applicable, except delete MIL-STD-130 and substitute AND10395.

3.2.7.2.1 RADIO CALL PLATE.- A radio plate with "RADIO CALL - - - -" (numbers as specified by NAVAIRSYSCOM) shall be provided in a conspicuous position on the pilot's instrument panel and the radar intercept officer's instrument panel.

3.2.7.3 IDENTIFICATION AND MODIFICATION PLATES.- Applicable, except that the contract number may be omitted from the modification plates. The basic model designation (F-4) in lieu of the complete model designation (F-4(FVS)) shall be required on modification plates.

3.2.7.4 MARKING OF CONTROLS.- Applicable, except that controls shall be marked unless their function and operation is obvious and incorrect operation does not involve hazard.

3.2.7.5 MARKING OF FLUID LINES.- Applicable, except that DWG AND 10375 No. 8, sheet 1 and No. 9, sheet 2 shall apply.

3.2.7.6 MARKING OF CARGO COMPARTMENTS.- Not applicable.

3.2.8 EXTREME TEMPERATURE OPERATION.- Applicable, subject to availability of suitable components at the time of procurement by the contractor.

3.2.8.1 PREVENTION OF ICE FORMATION.- Applicable, except delete MIL-T-18607 and substitute SR-105. Separate deicing equipment shall not be required, other than as specified in 3.12.5.3.4.

3.2.9 CLIMATIC REQUIREMENTS. - Applicable.

3.2.10 LUBRICATION.- Applicable, except that Spec MIL-L-6880A shall apply. A separate lubrication list need not be

3.2.10 (Continued)

submitted since lubrication data are included in the Handbook of Maintenance Instructions.

3.2.11 EQUIPMENT AND FURNISHINGS INSTALLATION.

3.2.11.1 GOVERNMENT FURNISHED AERONAUTICAL EQUIPMENT.- Government furnished aeronautical equipment shall be as required by Appendix 1. Government furnished aeronautical equipment shall not be altered, reworked or modified in any way without specific permission of NAVAIRSYSCOM in each case. Government furnished aeronautical equipment required by Appendix 1 and indicated as Type A installation shall be installed by the contractor. Government furnished aeronautical equipment required by Appendix 1 and indicated as Type B installation shall be installed by the Government, however, the contractor shall make suitable provision therefor, and shall make a trial installation in the first airplane to insure satisfactory operation. Drawings and samples of equipment listed in Appendix 1, as Type B installation will be furnished by NAVAIRSYSCOM for trial installation. Items of government furnished aeronautical equipment, which are personal issue items, or Allowance List items will not be included in Appendix 1.

3.2.11.2 CONTRACTOR FURNISHED EQUIPMENT.- Applicable, except delete Appendices 1-A and 1-B and substitute Appendix 1.

3.2.12 AIRPLANE VULNERABILITY.- Applicable.

3.2.13 AIRPLANE PROTECTION AGAINST FIRE.- Special consideration shall be given to reducing the possibility of fire during servicing, maintenance, normal operation of the airplane, and as a result of enemy attacks.

3.2.13.1 FLAMMABLE FLUID SHUT-OFF (MULTIENGINE AIRPLANES).- Applicable.

3.2.13.2 FIRE PREVENTION.- All containers and lines carrying combustible gases and liquids shall be isolated as much as practicable from sources of ignition. The following specific considerations shall apply:

(1) All combustible liquid containers and rigid lines within power plant compartments shall be of fireproof material. Flexible lines shall be of fire-resistant material equivalent to Spec MIL-H-5511A hose.

(2) Each system containing combustible gases or liquids shall be arranged to have minimum vulnerability to fires during flight or ground operation and to the effect of gunfire.

(3) Electrical equipment shall be isolated from systems containing flammable gases or liquids to prevent ignition by arcing of broken electrical lines due to battle damage,

3.2.13.2 (Continued)

accidental breakage, or normal operation. Non-explosion proof electrical equipment shall not be located where it may be exposed to flammable vapors as a result of leakage of flammable liquids. Electrical junction and relay boxes and covers constructed of nonmetallic materials shall be fireproof. Oxygen equipment shall be isolated from systems containing flammable liquids or gases.

(4) Where combustible liquid lines pass through spaces containing possible sources of ignition such as exhaust and electrical lines, such ignition sources shall be located as high as practicable in each space, and combustible liquid lines shall be located as low as practicable within the space.

(5) Accumulation of combustible liquids and gases in any compartment shall be prevented. The overboard discharge of combustible liquids and gases, including fuel dumping in flight, shall not, so far as practicable, result in impingement on any part of the airplane and in no case shall impingement result in entry of the combustible liquid or gas into the airplane.

3.2.13.3 FIRE ISOLATION.- Suitable fire isolating structure shall be provided over the entire length of the engines to protect the basic structure and fuel cell compartments. Other firewalls are not required. (See 3.11.5.)

3.2.13.3.1 FIREWALL AND SHROUDING PROTECTION. - Not required.

3.2.14 CONCENTRATION OF VAPORS AND GASES.- Applicable, except delete MIL-C-18591 and substitute SR-93. Delete MIL-H-18325 and substitute SR-133.

3.2.15 FAIL-SAFE REQUIREMENTS.- So far as practicable, control systems and devices involving safety during takeoff, flight, and landing shall be so designed that failure of such control system and/or device shall cause the item so controlled (control surface, landing gear, cooling unit, etc.) to assume a "safe" position.

3.2.15.1 thru 3.2.15.3 See 3.2.15.

3.2.16 GROUND OR DECK CLEARANCES.- Applicable, except the clearance shall not be less than 3 inches under the conditions specified in Spec SD-24J, Change 1. Delete paragraph (3) and substitute the

3.2.16 (Continued)

following:

(3) Two-point (tail down) attitude with main wheel shock absorber struts fully compressed and main wheel tires flat. The longitudinal attitude of the airplane shall correspond to an angle of 9° between the wing reference plane and the deck.

(b) The airplane in the level (longitudinal) attitude, rolled 5° about one main wheel (axis of rotation parallel to centerline of airplane) with main wheel shock absorber strut fully compressed and main wheel tire flat.

The clearance shall not be less than 6 inches between the deck and any component passing over the catapult shuttle. Airplane oscillation or divergence during the catapult run shall be taken into account assuming initial catapult spotting Condition a and e of Figure 1 of Spec MIL-D-8708A where distance "d" shall be equal to 6 inches.

3.2.17 MAXIMUM HEIGHT (CARRIER-BASED AIRPLANES).- Applicable, except delete (4) when the airplane is towed or pushed forward or rearward and brakes are applied suddenly.

3.2.18 DECK SPOTTING AND STORAGE.- Applicable.

3.2.19 EMERGENCY POWER.- See 3.15.1.1.1 and 3.16.2.4.

3.2.20 RELIABILITY AND MAINTAINABILITY.

3.2.20.1 RELIABILITY GUARANTEE.- The basic weapon system reliability and demonstration thereof shall be as specified in McDonnell Report E791.

3.2.20.2 MAINTAINABILITY GUARANTEE.- The basic weapon system maintainability and demonstration thereof shall be as specified in McDonnell Report E791.

3.2.21 COST APPROACH IN DESIGN.- The cost approach in design shall be a continuation of the program in effect on the Model F-4J airplane.

3.2.22 HUMAN ENGINEERING.- The human factors program shall be for those equipment items and operator task elements characteristic of the system, which are new or different from the corresponding equipment or operator tasks of the preceding models of the F-4 series aircraft system.

3.2.22 (Continued)

(1) Systematic analyses of the new or different functions within the system assigned to man and to machine will be carried out as required and shall support the final man-machine interface configuration.

(2) Standard human engineering principles and procedures shall be employed in the design of all new or different equipment and in the development of all new or different operator tasks incorporated within the system.

3.2.23 CONFIGURATION ACCOUNTING.- In addition to the requirements of 3.2.7 the contractor shall maintain a configuration accounting system in accordance with the requirements in McDonnell Report A017, Rev. D, "Phantom II Work Statement to Support Air Force In-Service Configuration Management Program" dated 1 July 1966. The identification plate applied to each selected item of equipment shall be in accordance with McDonnell Standard 9M357.

3.3 AERODYNAMICS.

3.3.1 GENERAL.- The airplane flying qualities shall be adequate to permit satisfactory fulfillment of the mission and utilization as specified herein. Spec MIL-F-8785-4 with the following additions or exceptions shall be applicable to the airplane with the primary armament and other equipment required for the primary mission. Paragraph numbers which follow correspond to those of Spec MIL-F-8785-4:

3.1.3 Operational Flight Envelopes.- Delete and substitute: The C_N vs. Mach Number including buffet boundary shall be as shown on Figure 3 of the detail specification. These envelopes shall serve to define the boundaries within which the airplane is expected to be operational and within which the requirements of this specification therefore apply.

3.1.3.1 Delete

3.1.4 Maximum Permissible Speed Envelope.- Delete and substitute: The stability and control requirements of this specification shall apply within the maximum speed envelopes shown on Figures 6.1 and 6.2 of the detail specification.

3.1.8 Deceleration Devices.- Delete and substitute: The effectiveness of the deceleration devices shall be sufficient to allow the airplane at 25,000 feet to decelerate from V_{max} at military power to 0.8 V_{max} at military power in a time not to exceed 20 seconds when the throttle is cut to idle. The deceleration devices shall cause a minimum of 0.2g deceleration at combat gross weight and limit speed of 750 knots EAS. The limit speed for operation shall be as specified in 3.4.1.2 of the detail specification.

3.1.9 Configuration.- Delete second sentence and substitute: Items of configuration not specified such as: wing sweep, and cockpit enclosure shall be in their normal settings for the particular configuration.

3.2.1 Control Friction and Breakout Force.- Control system friction in all airplanes shall be as low as possible and breakout forces including friction, feel, preload, etc., shall be within the limits presented below with all systems operating:

3.3.1 (Continued)

Allowable breakout force (including friction, pounds)

Control System	Force - Lbs. Min.	Max.
Longitudinal	0.5	3.0
Lateral	0.5	3.0
Directional	0.5	7.0

3.3.5 Short Period Oscillations. - Delete "1/10 amplitude" and substitute "1/2 amplitude." Delete "As a minimum, however, the oscillations at combat ceiling shall damp to 1/2 amplitude in 1 cycle."

3.3.9 Control Forces in Steady Accelerated Flight. -

Add: At supersonic flight conditions where the airplane becomes highly stable, the maximum force gradients may exceed the Spec MIL-F-8785-4 requirements but shall not exceed 18 lbs per g gradient.

3.3.11 Control Effectiveness in Takeoff. -

Delete $V_{S_{TO}}$ and substitute 1.10 $V_{S_{TO}}$.

3.4.1.2 Delete "In configuration PA this parameter shall, moreover, have a value at least as high as that required by curve B of Figure (1)."

3.4.13.1 Delete 10 percent V_{S_L} and substitute 6 percent V_{S_L}.

SD-513-2

F-4 (FVS)

Usable Normal Force Coefficients

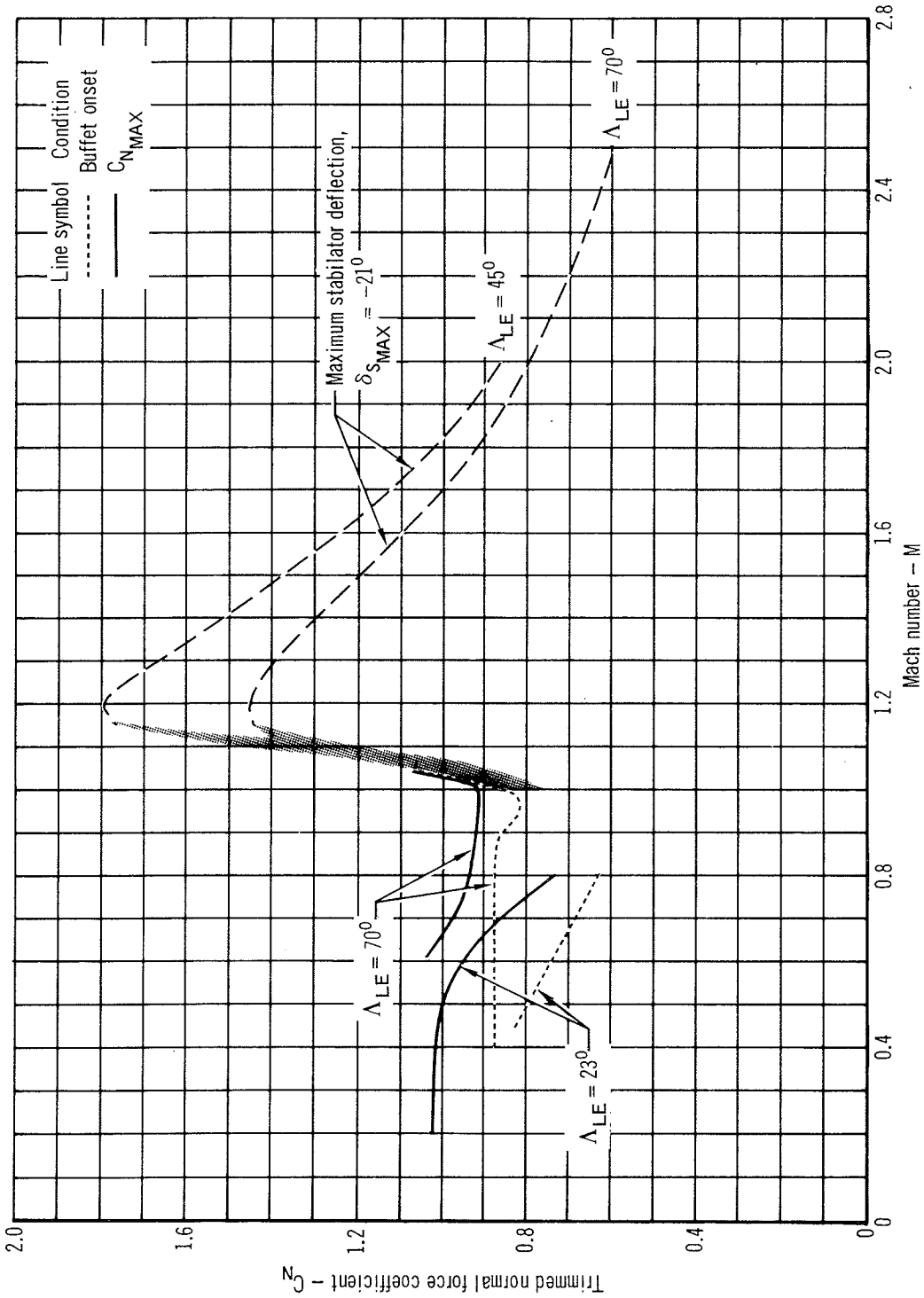

Figure 3

3.3.1 (Continued)

3.4.16.6 Table VI Minimum Rolling Performance Requirements

Class III: Delete and substitute:

	Configurations P, CO (Speeds up to V_H)	Configurations P, CO, (at 0.95 V_M)	Configurations L 1.1 V_{S_L}
Altitude	20,000 feet	Lowest altitude at which highest value of V_M (in terms of Mach Number) may be attained.	Low
Class III	(a) $\frac{pb}{2v}$ = 0.07 between 1.1 V_{S_G} and minimum combat speed. (b) The bank angle shall be as shown on Fig. 4 of the Detail Spec. No control reversal shall be encountered under any flight condition. (Minimum combat speed = V_R/C maximum or 300 knots true whichever is higher)	Bank angle = 50 degrees in 1 second	Average $\frac{pb}{2v}$ = 0.035 for first 30 degrees of bank, where average $\frac{pb}{2v}$ is based on an average p obtained from the time required to reach 30 degrees of bank.

3.7.1 Normal Control System Operation.- Delete and substitute: The control system shall satisfy the applicable design requirements of this specification. The system shall be capable of providing rapid repeated control movements as might be required in very rough air condition. Requirements of this paragraph shall apply provided the two power control systems are operating as specified in 3.15.1.1 of the detail specification.

3.3.1 (Continued)

3.7.2 Power or Boost Failure.- Delete and substitute: All airplanes employing power or boost-control systems shall be provided with suitable means for control following loss of power or boost of one of the dual hydraulic control systems. The means for control following such failure (e.g., independent boost, direct mechanical control) is referred to herein as the alternate control system.

3.3.2 STABILITY AND CONTROL.- Applicable.

3.3.3 EXTERNAL STORES.- Applicable (see 3.18.6.3).

SD-513-2

Bank Angle

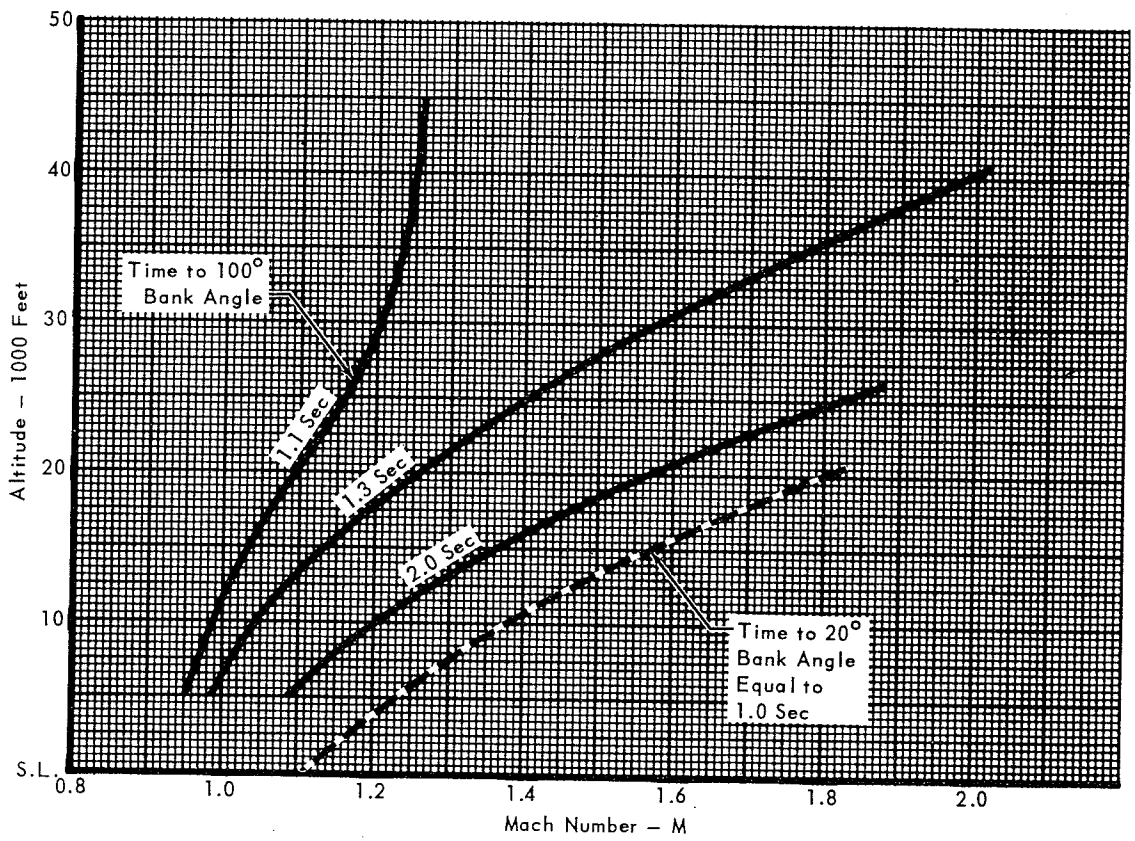

Figure 4

3.4 STRUCTURAL DESIGN CRITERIA

3.4.1 Strength Requirement. - The following applicable data shall be as specified, and are for information only. The contractual obligation shall be as specified in 3.4.1.1 thru 3.4.3.

Basic Flight Design Gross Weight	44,900 lbs.
Basic Landplane Landing Design Gross Weight	46,500 lbs.
Basic Catapulting Design Gross Weight	69,000 lbs.
Basic Landplane Take Off Design Gross Weight	69,000 lbs.
Basic Arresting Design Gross Weight(38655x1.15)	44,500 lbs.
Basic Barricade Engagement Design Gross Weight	33,600 lbs.
Basic Hoisting Design Gross Weight	49,790 lbs.
Basic Jacking Design Gross Weight	46,500 lbs.
Wheel Jacking Design Gross Weight	69,000 lbs.

Limit Load Factor at Basic Flight Design Gross Weight		
Wing Forward	+6.5/-3.0	As modified by Figures 6.1 and 6.2
Wing Aft	+7.33/-3.0	
Wing Sweep Operation	+4.0/-1.0	

Maximum Design Sink Speed at Basic Arresting Design Gross Weight (44,500 lbs.)	23.7 FT/sec.

3.4.1.1 Detail Strength Requirements. - The requirements of Spec MIL-A-8860 through 8870 for Class VF airplanes shall be modified as specified herein. These requirements shall be based upon the use of the J79 engine specified in 3.12.2.

3.4.1.1.1 MIL-A-8860 GENERAL SPECIFICATION. - Applicable, except as modified herein: (Paragraph numbers refer to corresponding paragraph numbers of Spec MIL-A-8860).

3.2 Design Strength - Delete and substitute: Analysis and tests shall demonstrate that strength exists for ultimate load requirements and that fatigue life of the structure equals or exceeds the specified life.

3.3.2 Air Force Aircraft - Not applicable.

3.7 Water and Handling Loads for Seaplanes - Not applicable.

3.4.1.1.1 (Continued)

3.9 Repeated Loads and Fatigue - Delete and substitute: Requirements for prevention of fatigue and repeated load damage shall be as specified in Paragraph 3.4.1.1.7 of the detail specification.

3.10 Ground Test - Delete and substitute: The static, dynamic, repeated load and other ground tests required for proof of structural design shall be as specified in Addendum 257 to MIL-D-8706A, Exhibit A.

3.11 Data and Reports - Delete and substitute: The structural reports required to substantiate the strength of the airplane, the sequence of report presentation and the contents of these reports shall be as specified in Addendum 257 to MIL-D-8706A.

6.2.1.1 Basic - Add. The wing shall be in any sweep position within the design range consistent with the specified use and within the design limits of the wing.

6.2.1.4 Landing Approach - Add. The wing shall be in the landing approach position.

6.2.1.5 Take Off - Add. The wing shall be in the takeoff position.

6.2.2.1 Minimum Flying Gross Weight - Add.

Operating Weight Empty	32695 lbs.
5.3% Internal Fuel	905 lbs.
Minimum flying gross weight	33600 lbs.

This weight shall be applicable to:

(a) Emergency shipboard landings

6.2.2.2 Basic Flight Design Gross Weight - Add.

Basic TakeOff Gross Weight	51750 lbs.
Less 40% of Internal Fuel	6850 lbs.
Basic Flight Design Gross Weight	44900 lbs.

3.4.1.1.1 (Continued)

6.2.2.3 Maximum Design Gross Weight - Delete and substitute: This weight shall be the basic take-off gross weight plus the maximum external load. This includes 19,210 pounds of external stores.

Basic Take-Off Gross Weight (includes 1,960 pounds of missiles)	51750 lbs.
External Fuel, Full at Stations 2, 5, and 8	13584 lbs.
External Stores at Stations 1 and 9	3666 lbs.
Maximum Design Gross Weight	69000 lbs.

This weight shall apply to:

(a) Taxiing and ground handling loads
(b) Catapulting loads
(c) Take-off ground and flight loads
(d) In-flight refueling conditions
(e) Wheel jacking
(f) Flutter and divergence prevention and vibration
(g) One stop braking energy requirement

6.2.2.4 Open-Ocean Design Gross Weight - Not applicable.

6.2.2.5 Carrier Landing Design Gross Weight - Delete and substitute: This weight shall be the operating weight empty plus four AIM-7F missiles and 4000 pounds of internal fuel and is:

Operating Weight empty	32695 lbs.
Four AIM-7F missiles	1960 lbs.
4000 Pounds of Fuel	4000 lbs.
Carrier landing design gross weight	38655 lbs.

For design loads see 3.4.1.1.4(3.1.1)

This weight shall apply to:

(a) Carrier Landings
(b) Arresting
(c) Shipboard securing
(d) 45 stop braking energy requirement

6.2.2.6 Landplane Landing Design Gross Weight - Applicable. Add: "This weight shall be":

3.4.1.1.1 (Continued)

Maximum design gross weight	69000 lbs.
Less 1800 gals of external fuel	12240 lbs.
Less 60% internal fuel	10260 lbs.
Landplane landing design gross weight	46500 lbs.

Add: (c) 5 stop braking energy requirement

6.2.2.8 Hoisting Design Gross Weight - Add.

Maximum design gross weight	69000 lbs.
Less external stores	19210 lbs.
Hoisting design gross weight	49790 lbs.

6.2.3.7 Level Flight Maximum Speed (V_H) - Delete and substitute: The maximum continuous level flight speed in the basic configuration commensurate with the specified operational use of the airplane.

6.2.3.8 Limit Speed (V_L) - Delete and substitute: The limit speed shall be as shown in Figure 5 for the extreme wing positions. Intermediate wing sweep condition shall have a V_L commensurate with the operational capabilities of the aircraft.

6.2.3.9 Limit Speed (V_{LF}) - Delete and substitute: The maximum speed for the landing approach and takeoff configurations shall be 250 knots.

3.4.1.1.2 MIL-A-8861 FLIGHT LOADS - Applicable except as modified herein (Paragraph numbers refer to corresponding paragraph numbers of Spec MIL-A-8861).

3.1.1 Gross Weight - Delete the last sentence and add: External store configurations shall be considered as special loadings with nW capabilities consistent with basic airframe strength. The strength capabilities for these external store configurations shall be as defined in the F-4(FVS) Strength Summary and Operating Restriction Report.

SD-513-2

Limit Speed (V_L)

Based on ICAO Standard Day

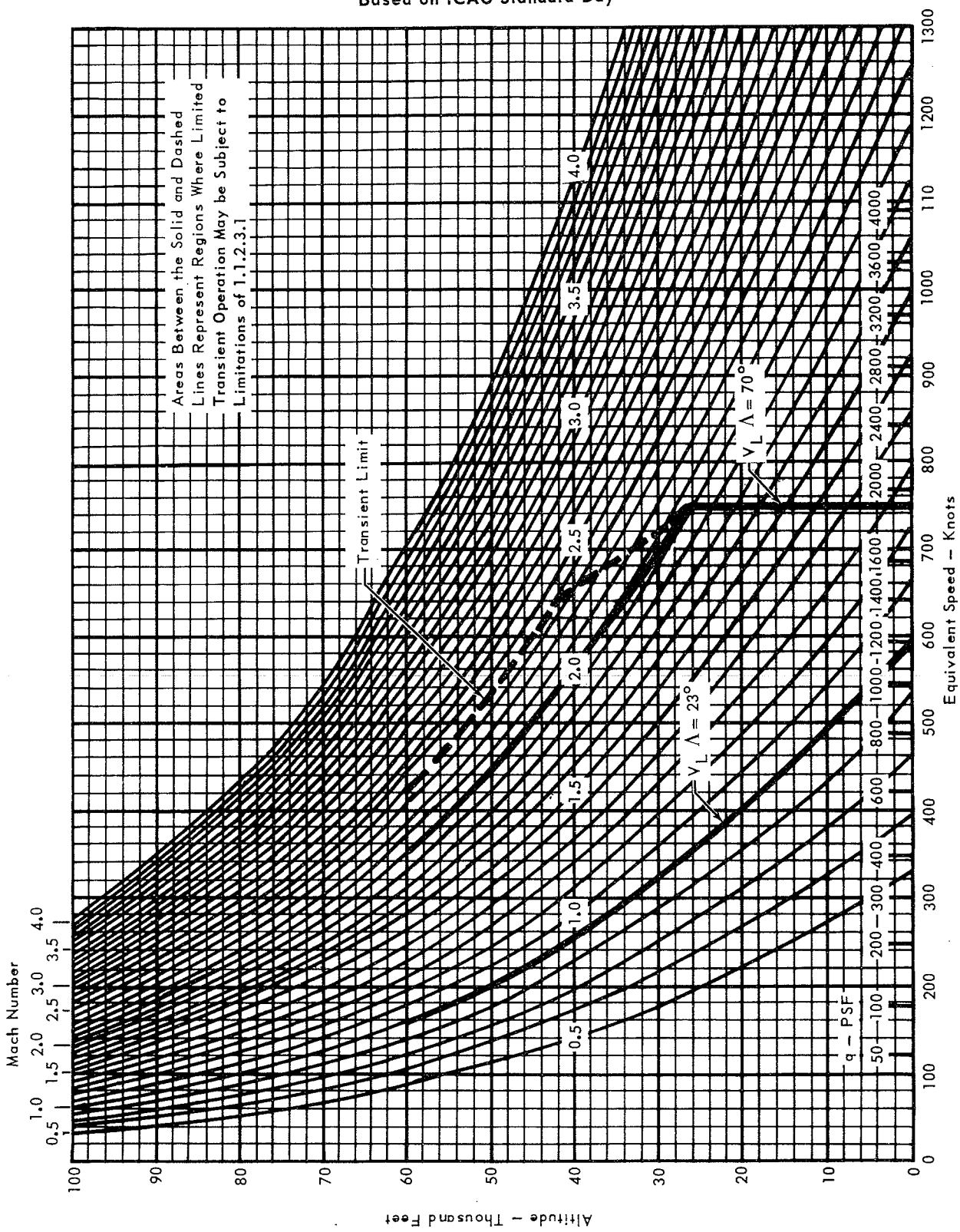

Figure 5

3.4.1.1.2 (Continued)

3.1.2 Center of Gravity Position - Delete and substitute: The design center of gravity position at each design gross weight shall be the actual maximum forward and the actual maximum aft position at that gross weight resulting from all possible distributions of loading for which provision is required plus a tolerance applied so as to move the maximum forward position forward and the maximum aft position aft of actual position. The tolerance shall be 1.5 percent MAC of the theoretical wing in the forward position or 15 percent of the distance between the most forward actual and the most aft actual values from the envelope for any one wing position, whichever is greater.

3.1.3.1 Removable and Disposable Mass Items - Delete the last sentence and substitute: For external store installation, the rates of roll with basic mission load shall be those resulting from the requirements of 3.3.1. For heavier store items, the rates of roll shall be as defined in the F-4(FVS) Strength Summary and Operating Restriction Report.

3.1.7 Pressurized Structure - Delete and substitute: The pressure differential between pressurized portions of the structure and the portions subject to ambient pressure shall be 0 to 1.33 times the maximum attainable with the airplane pressurizing equipment for ground conditions and 1.0 times the maximum attainable with the normal operating airplane pressurizing equipment for flight conditions. The maximum attainable pressure differential shall be the maximum upper tolerance limit of the cabin safety valve assembly, or shall be the maximum cabin differential pressure attainable by use of the cabin safety valve in a ground check of not less than three of the aircraft (selected at random), whichever is greater.

3.1.12 Tab Loads - Not applicable.

3.1.13 Unsymmetrical Horizontal Tail Loads - Delete the third and fourth sentences and substitute: The value of χ shall be .5 for all conditions at the airplane maximum normal force coefficient and .15 for all other conditions.

3.1.14 Fail Safe - Not applicable.

3.4.1.1.2 (Continued)

3.2.1 Balanced Maneuver - Delete the first sentence and substitute: The airplane shall be in the basic, high-drag, and dive-recovery configurations at all points on and within the maneuvering envelopes as shown in Figures 6.1 and 6.2.

3.2.2.2 Maneuvers with Specified Control Displacement - Delete the third sentence and substitute: The load factors to be attained shall be all values on and within the envelopes as shown in Figures 6.1 and 6.2.

Add: 3.2.4

3.2.4 Wing Sweep Operation - The wing sweep mechanism shall be capable of operating at load factors of -1.0 to +4.0 at basic flight design gross weight.

3.3.1.2 Level Flight Roll - Add: If a roll rate greater than 150 degrees per second would result with external stores other than basic mission load, the control position may be lessened, subsequent to attainment of the maximum rolling acceleration, to that position resulting in a roll rate of 150 degrees per second.

3.3.3.5 High Speed Rudder Kick - Delete first sentence and add: The airplane shall be in the basic and high drag configurations at speeds up to V_L below 20,000 ft. and at subsonic speeds at higher altitudes.

3.4.1.1.3 MIL-A-8862 LANDPLANE LANDING AND GROUND HANDLING LOADS - Applicable, except as modified herein: (Paragraph numbers refer to the corresponding paragraph numbers of Spec. MIL-A-8862).

3.3.5 Special Tail-Gear Conditions - Not applicable.

3.3.6 Tail-Gear Obstruction - Not applicable.

3.5.1 Rebound - Delete and substitute: The inertia on the unsprung mass of the main and auxiliary landing gears shall include those due to sudden extension of the landing gear as the wheels roll over the deck edge subsequent to catapulting. The design shall be such that these loads may be applied repeatedly without yielding of the structure.

3.5.2 Extension and Retraction of Landing Gear - Change Paragraphs (a) and (b) to read:

(a) Aerodynamic loads up to the limit speed of 250 KEAS.

SD-513-2

F-4(FVS) Symmetrical V-n Diagram
$\Lambda_{L.E.} = 23^{\circ}$
Weight = 44,900 Lb.
Unswept Wing

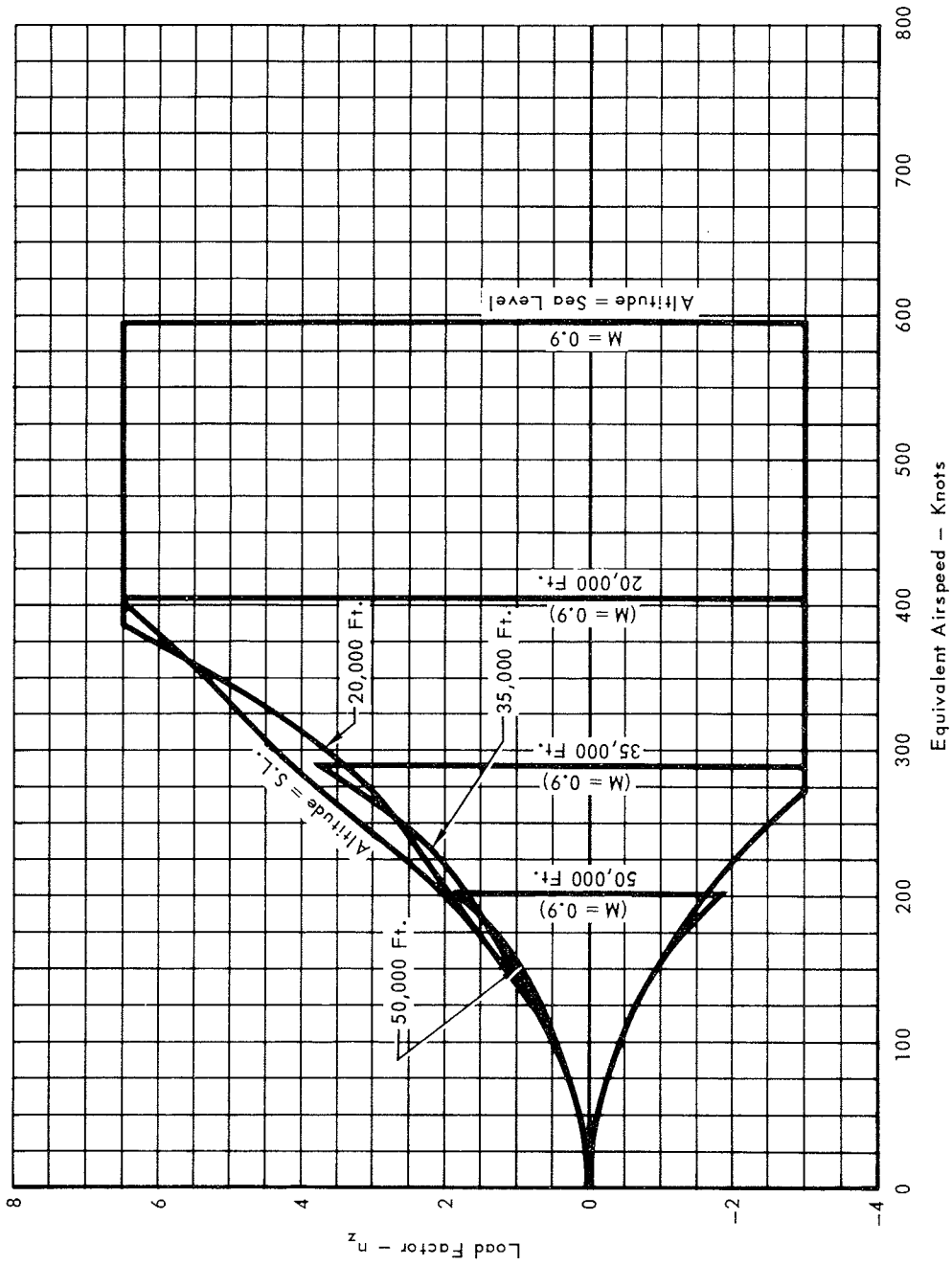

Figure 6.1

F-4(FVS) Symmetrical V-n Diagram

$\Lambda_{L.E.} = 70^{\circ}$

Weight = 44,900 Lb.

Swept Wing

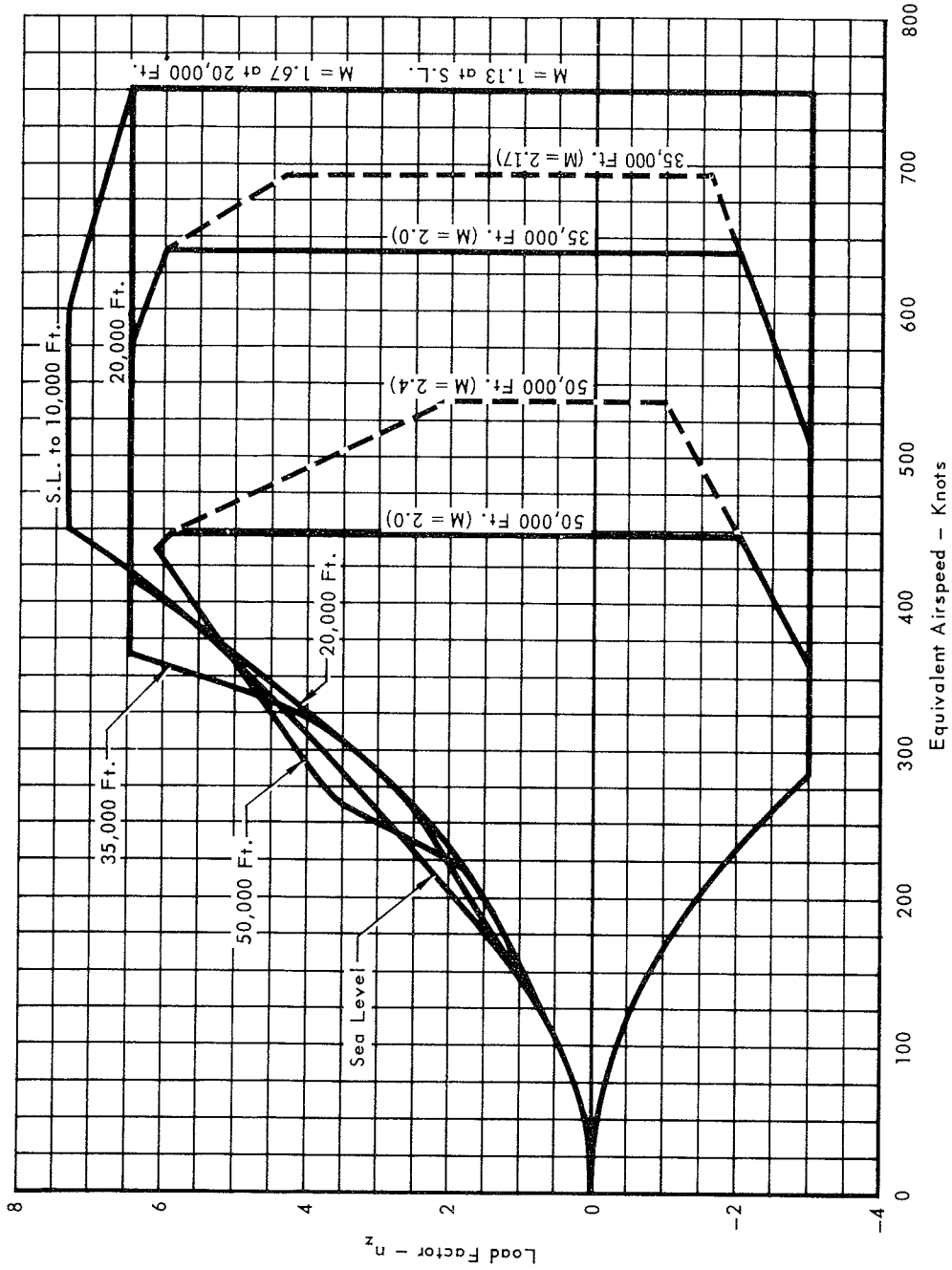

NOTES: 1. Solid Lines Represent Steady State Thermal Limits. Reduction of Load Factor at High Mach Numbers is Due to Thermal Effects on Aircraft Structure.

2. Areas Between the Solid and Dashed Lines Represent Regions Where Limited Transient Operation May be Permitted Subject to Limitations of 1.1.2.3a.

Figure 6.2

3.4.1.1.3 (Continued)

(b) Inertial loads corresponding to the maximum and minimum symmetrical limit load factors of 1.25 and 0.0.

3.5.5 Tail Bumper - Not applicable.

3.5.6 Turn-over - Not applicable.

3.6 Ski Loads - Not applicable.

3.4.1.1.4 MIL-A-8863 ADDITIONAL LOADS FOR CARRIER-BASED AIRPLANES - Applicable, except as modified herein (Paragraph numbers refer to corresponding paragraph numbers of Spec. MIL-A-8863).

3.1.1 Gross Weights - Delete and substitute: The design gross weight shall be as specified in 3.4.1.1.1 (6.2.2.5) of the Detail Specification. The weight for the landing conditions of 3.2 and 3.3 (except that 3.3.3 shall not apply) shall be 1.15 times the carrier landing design gross weight and shall be used for structural loads only. The approach speed, engaging speed, sinking speed, and other performance parameters associated with 3.2 and 3.3 shall be based on a gross weight of 1.15 times the carrier landing design gross weight.

3.1.4 Engine Thrust - Change the first sentence to: The engine thrust for the conditions specified in 3.2 and 3.3 shall be approach power thrust.

3.2 Landings - Delete and substitute: Strength is required for shipboard landings for the loads resulting from the requirements of the subparagraphs 3.2 as amended by this specification and for laboratory drop tests which simulate these landings. Field carrier landing practice and field arrestment capabilities shall be defined in the F-4(FVS) Strength Summary and Operating Restrictions Report.

3.2.1 Maximum Deck Reactions - Delete and substitute: The maximum deck reaction on both units of the main landing gear shall not exceed 260,000 pounds and not more than 130,000 pounds for each main gear for the landing conditions specified in 3.2.

3.4.1.1.4 (Continued)

3.2.4.1 Cable Impact - Delet and substitute: The design criteria associated with running over deck obstructions during landings shall be the subject of separate negotiations.

3.2.5 Drift Landing - In the first sentence, delete the phrase "the mean sinking speed" and substitute 16.0 feet per second sinking speed.

3.2.6 Free-flight Engagement - Change the first sentence of the last paragraph to read: The lift shall be 1.0W and 1.15W.

3.3.1 Arrested Run - Add: The maximum horizontal aft-acting component of the arresting load shall be 140,000 pounds.

Delete the third sentence and substitute: The arresting hookloads shall be the maximum aft-acting hookload combined with 1.0W side load.

3.4.1.1.4 (Continued)

3.3.2 Arrested Run with Brakes - Add: The maximum horizontal aft-acting component of the arresting load shall be 140,000 pounds.

3.3.3 Barricade Engagement - Add the following: The ultimate horizontal drag force shall be 100,000 pounds.

3.3.4 Barrier Engagement - Not applicable.

3.4.1.2 Release - Change the fourth sentence to read: The design tension load applied to the holdback fitting shall not be less than H.

Delete specification MIL-C-18805 in the last sentence and substitute MIL-L-22589.

3.4.1.3 Release Element - Delete specification MIL-C-18805 in the first sentence and substitute MIL-L-22589.

3.4.2 Start of Run - Delete specification MIL-C-18805 in the first sentence and substitute MIL-L-22589.

Add: The critical, catapulting loads shall be determined using the airplane configured for normal catapulting operations with a peak horizontal tow force of 250,000 pounds.

3.4.4 Dynamic Analysis of Landing Gear Loads - Delete the second sentence. Add: Maximum airplane catapult design gross weight shall be 69,000 pounds.

3.5.2 Wing and Fin Folding - Not applicable.

3.6.1 Tail Bumpers - Not applicable.

3.6.2 Sudden Extension of Landing Gears - Delete. Refer to 3.4.1.1.3 (3.5.1) of the Detail Specification.

3.4.1.1.5 MIL-A-8864 WATER AND HANDLING LOADS FOR SEAPLANES - The specification is not applicable.

3.4.1.1.6 MIL-A-8865 MISCELLANEOUS LOADS.- Applicable, except as modified herein. (Paragraph numbers refer to corresponding paragraph numbers of Spec MIL-A-8865.)

3.2.2 Litter Installation Loads - Not applicable.

3.2.3 Miscellaneous Equipment (USAF only) - Not applicable.

3.3 Strength of Miscellaneous Equipment Installations - noncrash (USAF only)- Not applicable.

3.4 Assisted Takeoff - Not applicable.

3.6 Floor Strength - Not applicable.

3.7.4 Reactions - (f) add the word "control" after "cockpit lateral."

3.9 In-Flight Refueling Loads - Delete and substitute: The following specified loads apply for the probe-and-drogue type in-flight refueling system.

3.9.1.1 Impact - Delete and substitute: Strength shall be provided for an impact load of 1200 pounds.

3.9.1.2 Gust - Delete.

3.9.1.3 Pull-Out Loads - Delete and substitute: The probe load at pull-out shall be 1000 pounds longitudinally, singly, and in combination with 1000 pound radial force applied at any angle from 0 to 360 degrees.

3.9.1.4 Tanker Airplane - Not applicable.

Add 3.9.1.5

3.9.1.5 Flight Loads - Strength shall be provided for $V_{EAS} \leq 400$ knots, $n_z = 0 \rightarrow 2.0$ with the probe extended, and $V_{EAS} \leq 300$ knots or M = .9 whichever is less, $n_z = 0 \rightarrow 2.0$ for operation.

3.9.2 Flying Boom Systems - Not applicable.

3.10 External Stores - Not applicable.

3.11 Parabrake Chutes - Delete and substitute: In-flight deployment shall not be required. For deployment after touchdown, the airspeed shall not exceed 200 knots.

3.4.1.1.6 (Continued)

3.11.1 Steady Load - Delete and substitute: The load shall be equal to the drag load at the specified speed applied in an ellipse defined by a $\pm$ 15° vertical angle and a $\pm$ 10° horizontal (yaw) angle from the flight path.

3.11.3 Gust - Delete.

Add 3.12

3.12 Loads on Balance Weights - A repeated inertia load of 50,000 cycles with positive and negative amplitudes corresponding to a load factor of 40 shall act on each balance weight attached to control surfaces. These inertia loads shall act normal to the plane of the control surface in both directions.

3.4.1.1.7 MIL-A-8866 RELIABILITY REQUIREMENTS REPEATED LOADS AND FATIGUE.- Delete and substitute: The structural design shall be such as to minimize to the greatest possible degree, consistent with structural weight sufficiently low for satisfactory performance, the probability of occurrence of fatigue failures throughout the service life of an airplane typical of this type. This design consideration shall be commensurate with the technical ability of the contractor's organization and consistent with all available information on material fatigue properties, deleterious effects of discontinuities, and manufacturing processes, and magnitude and frequency of occurrence of maneuver, gust and landing loads. This requirement shall not be construed to obligate the contractor to guarantee complete freedom from structural troubles for any stated period of time but instead to focus attention during the design stages on the elimination of potential sources of fatigue troubles, in order to provide realistic fatigue strength for any repetitions of loads which can by conventional engineering and statistical procedures be predicted to occur during expected service life of production aircraft. The predicted spectrum of loads to be employed in fatigue analysis and/or tests shall be as agreed upon by NAVAIRSYSCOM and the contractor.

Demonstration of compliance with this requirement shall be subject of separate negotiation, and shall be limited to:

(a) Laboratory tests as agreed upon by NAVAIRSYSCOM and the contractor.
(b) A report evaluating these fatigue test results in terms of probable airplane service life.

3.4.1.1.8 MIL-A-8867 GROUND TESTS. - Delete and substitute: The static, dynamic, repeated load, and other ground tests required to show compliance of structural design shall be as specified in Addendum No. 257 to MIL-D-8706A which is in accordance with MIL-A-8867 as specified therein.

3.4.1.1.9 MIL-A-8868 DATA AND REPORTS. - Delete and substitute: The data necessary to show compliance with the design and test requirements of Specification MIL-A-8860 series applicable to procurement of the subject airplane shall be as specified in Addendum No. 257 to MIL-D-8706A which is in accordance with MIL-A-8868 as specified therein.

3.4.1.1.10 MIL-A-8869 SPECIAL WEAPONS EFFECTS. - Applicable except as modified herein. (Paragraph numbers refer to the corresponding paragraph numbers of Spec MIL-A-8869.)

1.1 General - Add. The nuclear weapons to be considered are as defined in paragraph 3.18.6.3.2 of the Detail Specification.

3.4.1.1.11 MIL-A-8870 VIBRATION, FLUTTER, AND DIVERGENCE. - Applicable, except as modified herein: (Paragraph numbers refer to corresponding paragraph numbers of Spec MIL-A-8870.)

3.1 General - Delete and substitute: Construction, materials, and design shall be such that there will be no flutter, buzz, other related dynamic aero-elastic instabilities, divergence, or excessive vibration of the structural components of the airplane throughout the design range of altitudes, maneuvers, thermal conditions where losses in rigidity may occur, weights, and speeds consistent with the requirements of 3.1.1, 3.1.2, and 3.1.3.

3.1.1 Flutter and Divergence - Delete and substitute: There shall be no flutter, buzz, or other related dynamic instabilities or divergence of the airplane or its components at all speeds up to $1.15V_L$ associated with each wing sweep position for all design ranges of altitudes, maneuvers, and internal loading conditions. To assure safety, it shall be shown by analytical or experimental data (including flight test data up to limit speeds), or both, that an increase of 15 percent in equivalent airspeed at all points on the limit speed envelope of the airplane (see Figure 5 of the Detail Specification) both at constant Mach number and, separately, at constant altitude, will not result in flutter or divergence. In addition, the damping coefficient, g, for critical flutter modes for all altitudes and flight speeds up to the appropriate V_L for each wing sweep position shall be at least 0.03 or the zero airspeed airplane structural damping coefficient, whichever is less.

3.4.1.1.11 (Continued)

Add: 3.1.1.1

3.1.1.1 External Stores - Speed restrictions for flutter and/or special operating procedures for the external store configurations of 3.12.9.4, 3.12.9.13.3. and 3.18.6.3 of the Detail Specification shall be as defined in the F-4(FVS) Strength Summary and Operating Restriction Report.

3.1.2 Vibration - Delete and substitute: The design of the airplane for avoidance of fatigue failures resulting from vibrations (including, but not limited to those caused by jet engine noise both in flight and on the ground, boundary layer noise, fuel slosh, wing and tail buffet, engine vibration, or other mechanical or aerodynamic phenomena) shall be as specified in Paragraph 3.4.1.1.7 of the Detail Specification.

3.1.3 Crew Comfort - Delete and substitute: The vibration of crew seats, rudder pedals, control columns, and primary structural members which can affect crew comfort in the cockpit during unaccelerated flight from minimum to maximum cruising speed shall not exceed the following root mean square (RMS) levels within each one-third octave band of frequency: 0.14 g RMS acceleration for band-width center frequencies between 3 and 22 cycles per second (CPS), 0.0028 inches RMS displacement for bandwidth center frequencies between 22 and 86 CPS, and 2.1 g RMS acceleration for bandwidth center frequencies between 86 and 500 CPS.

3.2.1 Mass Balance of Control Surfaces - Delete and substitute:

3.2.1.1 Static and Dynamic Balance - The mass balance of each reversible control surface shall be adequate to preclude flutter in all possible critical modes. The amount of mass balance shall be established by analysis and/or test.

3.2.1.2 Atmospheric Effects on the Mass Properties of Control Surfaces - Construction, materials, and design of all control surfaces shall be such that detrimental changes in mass, static balance, and moment of inertia due to exposure to atmospheric conditions are prevented. Water absorption and water entrapment are two conditions requiring prevention.

3.4.1.1.11 (Continued)

3.2.2.1 Location of Balance Weights - Delete and substitute: Balance weights in control surfaces shall be located so that the flutter safety of both control surface and fixed surface are assured at a minimum expenditure of added weight. The distribution of balance weights shall be such that the control surface is adequately balanced to preclude flutter. Balance weights shall preferably not be located externally with respect to the planes of the control surfaces. If high acceleration takeoffs, such as by catapulting or are to be made, special consideration shall be given to the design of the mass balance and actuating systems of control surfaces in order to prevent control surface rotations resulting from inertia loads acting on the balance weights and actuating systems. The use of linkage systems to attach balance weights to the control surfaces shall be substantiated by flight and laboratory tests of the linkage system.

3.2.2.2 Rigidity and Strength of Balance Weight Attachments - Delete and substitute: The natural frequencies of vibration of the balance weights as installed shall be at least twice the highest frequency of the flutter mode for which the balance weight is required to be effective. The strength requirements for balance weight attachments are specified in paragraph 3.4.1.1.6(3.12) of the Detail Specification.

3.2.3.1 Frequency Requirements for Control Surface Irreversibility - Delete and substitute: The adequacy of the rotational frequency of all irreversible control surfaces (including all-movable control surfaces) shall be established by flutter analyses or model tests.

3.2.3.2 Free Play of Irreversible Control Surfaces - Delete and substitute: Flutter model tests, vibration tests, and, as are necessary, flight flutter tests, shall be performed to substantiate the adequacy of values of free play in excess of those specified in 3.2.3.2 (a), (b), (c), and (d).

3.4.1.1.11 (Continued)

3.2.4 Control Surface Tabs - Not applicable.

3.2.10 Skin Panel Flutter - Delete and substitute: The stiffness and damping properties of skin panels, ribs, spars, and stringers shall be sufficient to prevent the occurrence of skin panel flutter.

3.2.11 Flutter, Structural, or Vibration Models - Delete and substitute: Flutter model tests of the airplane or its components may be required when suitable theoretical methods of analysis are lacking, or when the results of theoretical methods are doubtful or indicate marginal stability. When flutter model tests are employed to substantiate flutter safety, the contractor shall demonstrate by suitable analysis and tests that the model dynamically simulates corresponding components of the full scale airplane. If it is determined by analysis, static tests, or vibration tests that significant discrepancies exist between the flutter parameters of the model and the corresponding components of the airplane, additional tests on suitably modified models may be required. If transonic or supersonic flutter models are required the model tests shall be conducted to combinations of dynamic pressures and Mach numbers which correspond to the airplane requirements specified in Paragraph 3.4.1.1.11 (3.1.1) of the Detail Specification. If low speed model flutter tests are employed suitable compressibility corrections shall be applied to the results. These corrections shall be based on theoretical analyses and/or wind tunnel or flight tests.

3.2.12 Antivibration Systems - Not applicable.

3.4.1.2 LIMIT SPEED. - The limit speeds for operation of various items shall be as follows:

	Knots EAS
Alighting gear extension and retraction (sea level to 10,000 ft.)	250
Arresting gear extension and retraction (sea level to 10,000 ft.)	250
Trailing Edge Flap	250
Leading Edge Slat	250
Canopy Jettisoning	V_L
Speed Brake Opening and Closing	V_L
In-Flight Refueling Probe	300 or M = .9 whichever is less

3.4.2 ALLOWABLE LOADS AND STRESSES. - Allowable loads and stresses shall be in accordance with Spec MIL-A-8860 series except as modified herein. Antifriction bearing load ratings in excess of the static nonbrinell loading rating may be used subject to NAVAIRSYSCOM approval.

3.4.3 STRUCTURE EXPOSED TO AIRSTREAM. - Engine cowls, other cowlings or fairings, windshields, cockpit enclosures, and other items of structure or equipment exposed to the airstream and having special aerodynamic characteristics, shall be designed for all combination of pressure distributions and accelerations resulting from the design conditions specified for the airplane combined with conservative assumptions with respect to coincident vibratory loads or stresses.

3.5 WING GROUP.

3.5.1 DESCRIPTION.- The wing group shall include the variable sweep wings, ailerons, spoilers, trailing edge flaps, and leading edge slats.

3.5.2 CONSTRUCTION.- Applicable. The wings shall be arranged as a medium-high monoplane and shall consist of an inner and outer wing. The outer wing shall be designed for variable sweep.

3.5.2.1 DETACHABLE WING TIPS.- Applicable.

3.5.3 AILERONS.- Applicable. The ailerons shall operate as part of the lateral control system and shall be power operated.

3.5.3.1 SPOILERS.- Spoilers shall be provided and shall operate as part of the lateral control system. The spoilers shall be power operated.

3.5.4 LIFT AND DRAG INCREASING DEVICES.- Trailing edge flaps and leading edge slats shall be provided.

3.5.4.1 TRAILING EDGE FLAPS.- All metal double slotted trailing edge flaps shall be provided. Flaps shall be power operated and capable of full extension at the speeds specified in 3.4.1.2. Trailing edge flaps need not be interconnected if lateral control is adequate to compensate for unsymmetrical conditions. A trailing edge flap position indicator shall be provided in the forward cockpit.

3.5.4.2 LEADING EDGE SLATS.- Leading edge slats shall be provided. They shall be power operated and capable of full extension at speeds specified in 3.4.1.2. Provisions shall be made to synchronize the motion of the leading edge slats and the trailing edge flaps. A slat position indicator shall be provided in the cockpit. In addition to the leading edge slat on the outer wing, an aerodynamic surface shall be provided on the inner wing to provide a transition from the outer wing slat to the inner wing leading edge. This surface shall be extended and retracted with the slat.

3.5.5 SPEED BRAKES.- See 3.7.1.6.

3.5.6 thru 3.5.6.3 WING FOLDING.- Not applicable.

3.5.7 PROVISION FOR FLOATS AND SKIS.- Not applicable.

3.5.8 VARIABLE SWEEP WINGS. - Applicable. It shall be possible to sweep the wings from 23 degrees to 70 degrees in 15 seconds maximum. Interlocks shall be provided to prevent wing sweep with flaps down. Wing sweep shall be controlled from the cockpit. A wing position indicator shall be provided in the forward cockpit.

3.6 TAIL GROUP.

3.6.1 DESCRIPTION. - Applicable, except that the tail group shall include the all-movable horizontal tail, fin, and rudder.

3.6.2 HORIZONTAL TAIL. - The horizontal tail shall be an all-movable surface controllable in-flight and shall be the longitudinal control surface. Trim tabs shall not be provided. The one-piece horizontal tail shall be removable from the fuselage without disassembly for ease of maintainability. Detachable tips shall be provided to facilitate repair of the horizontal tail.

3.6.3 ELEVATORS. - Elevators shall not be provided.

3.6.4 FINS. - Applicable. The fin may be constructed integrally with a section of the fuselage.

3.6.5 RUDDERS. - Applicable, except that trim tabs shall not be provided.

3.6.6 HORIZONTAL TAIL AND RUDDER STOPS. - Applicable.

3.6.7 ARTIFICIAL TRIM. - See 3.10.3.

3.7 BODY GROUP. - Applicable.

3.7.1 FUSELAGE.

3.7.1.1 DESCRIPTION. - The fuselage shall include a tandem type cockpit for the pilot and radar intercept officer, engine compartments, fuel tanks, missile wells, and provisions for equipment.

3.7.1.2 CONSTRUCTION. - Applicable.

3.7.1.3 CREW AND PERSONNEL STATIONS. - Crew and personnel stations shall be suitable for carrying out the operations required. The safety of the crew in the case of major accidents shall be carefully considered. Particular attention shall be given to the elimination of sharp corners on windshields and projections in the cockpit on which the members of the crew may strike the heads or faces in severe or crash landings. The instrument panel in front of the crew shall be as smooth as practicable. The tandem type cockpit shall be occupied by the pilot and radar

3.7.1.3 (Continued)

intercept officer and shall be pressurized as specified in 3.20.1.1.1. A fixed windshield shall be located forward of the pilot and canopies consisting of two hinged sections shall be provided. Access to the cockpits shall be in accordance with 3.2.4.2.5.

3.7.1.3.1 PILOT'S COCKPIT.- Pilot's cockpit shall be arranged to permit the unrestricted movement of control levers through their specified ranges. A minimum clearance of 2 inches shall be provided between the rim of the control wheel or the top of the control stick, and the cockpit or installed equipment. Equipment shall be so arranged that movements of the occupant involved in the normal operation of airplane equipment shall not interfere with any of the propulsion system controls. The location and actuation of cockpit controls shall be in general accordance with MIL-STD-203B. The above is applicable, except as previously established on the F-4B/J.

3.7.1.3.1.1 COCKPIT CANOPIES AND CABIN ENCLOSURES.- Applicable, except that MIL-P-18927D(WEP) shall apply, and the magnetic compass may be mounted closer than 24 inches to magnetic material. Two canopies of the modified bubble type, separately hinged at their aft ends, shall cover the crew stations. Plastic in the hinged canopy sections shall be of stretched Plexiglass 55, or equivalent, material and shall be ultraviolet ray absorbing type in accordance with Spec MIL-P-8184A and installation shall be in accordance with Spec MIL-P-6997A.

3.7.1.3.1.1.1 COCKPIT CANOPIES.- Applicable, except external emergency canopy releases shall be provided on the left side of the airplane. A power mechanism shall be provided for the normal operation of each hinged section. It shall be possible either to open or close the sections at speeds up to 60 knots EAS. When the sections are opened at any speed between 80 knots EAS and V_L, yielding or failure of the structure shall be permissible. The canopy latching provisions for the fully closed position shall be capable of withstanding 40g crash deceleration loads. Servicing

3.7.1.3.1.1.1 (Continued)

the mechanism after each emergency opening shall be permissible. An auxiliary or emergency system shall be provided for jettisoning each hinged section at any speed up to V_L specified in 3.4.1.1.1 (6.2.3.8).

3.7.1.3.1.1.2 CABIN ENCLOSURES. - Not applicable.

3.7.1.3.1.2 WINDSHIELD. - Applicable, except that the windshield side panels shall be of stretched Plexiglas 55, or equivalent, material in accordance with Spec MIL-P-8184A. The windshield shall be of three piece construction. The center panel shall be laminated glass, approximately 1.0 inch thick, in accordance with Spec MIL-G-8602, Class II, Type B, Grade 2N and installation shall be at an angle of approximately 28.5 degrees to the horizontal.

3.7.1.3.1.3 WINDBLAST PROTECTION. - Applicable.

3.7.1.3.1.4 VISION. - Applicable. The over the nose vision angle shall be 15 degrees based on a normal pilot's eye position at airplane water line 61.418 and fuselage station 122.23.

3.7.1.3.1.5 OVERTURN STRUCTURE. - Provision for overturn structure is not required, however, every practicable precaution shall be taken in the design to protect the crew members against crushing forces in the event of overturning.

3.7.1.3.1.6 THERMAL RADIATION CLOSURES. - Not required.

3.7.1.3.2 OTHER CREW STATIONS. - Not applicable.

3.7.1.3.3 PASSENGER STATIONS. - Not applicable.

3.7.1.4 CARGO COMPARTMENTS. - Not applicable.

3.7.1.4.1 CARGO COMPARTMENT FLOORING. - Not applicable.

3.7.1.5 EQUIPMENT COMPARTMENTS. - In general, compartments shall be provided for the armament equipment, fire control system and electronic equipment dependent upon ventilation, space, and balance requirements.

3.7.1.6 SPEED BRAKES. - Speed brakes shall be provided on the under side of the fuselage. The speed brake surface (3.10.2.2) shall be power operated and shall be designed to close under air loads in event of a power failure.

3.7.1.7 thru 3.7.1.7.6 DOORS AND HATCHES.- Not applicable.

3.7.1.8 EMERGENCY ESCAPE.- Emergency escape shall be as specified in 3.7.1.3.1.1.1 and 3.7.1.8.2.

3.7.1.8.1 MANUAL ESCAPE.- See 3.7.1.3.1.1.1.

3.7.1.8.1.1 MANUAL ESCAPE EXITS.- See 3.7.1.3.1.1.1.

3.7.1.8.2 EJECTION SEAT ESCAPE.- Modified Martin Baker, Mark H5, seats shall be provided for the pilot and radar intercept officer. The pilot's and radar intercept officer's seat adjustment shall permit movement of the seat bucket 2.0 inches below and 4.0 inches above the neutral seat reference point. Adjustment shall be accomplished by means of an electrically operated actuator. The seat bucket shall accommodate a GFAE Rigid Seat Survival Kit (RSSK-1A), Aerospace Crew Equipment Laboratory Specification Control Drawing 31H1260. The GFAE PK-2 survival kit shall be repackaged and installed in the RSSK-1 Kit for installation in the seat. The ejection envelope width shall be 26.25 inches with the canopy off. With the DRSR installed on the radarscope, the 2.31 inch protrusion of the radarscope indicator into the ejection plane, when in the stowed position, shall be increased to 3.00 inches. Ejection of the seats shall have a "No-Fixed" ejection sequence. The seat shall be provided with a drogue chute assembly.

3.7.1.8.2.1 EJECT LIGHT. - A guarded push button type switch shall be provided in the forward cockpit for illumination of a red "EJECT" light in the aft cockpit to advise the RIO to execute escape procedures. Power for the light shall be supplied by a dry cell battery.

3.7.1.8.3 CAPSULE ESCAPE.- Not applicable.

3.7.1.9 WINDOWS AND PORTS.- Not applicable.

3.7.1.10 FLOORING (GENERAL REQUIREMENTS).- Applicable, except cockpit flooring need not be removable.

3.7.2 thru 3.7.2.10 HULL.- Not applicable.

3.8 ALIGHTING GEAR (WHEEL TYPE).

3.8.1 DESCRIPTION.- Applicable.

3.8.1.1 ARRANGEMENT.- Applicable, except delete "Angle B shall not be less than Angle C." from Figure 3.8.1.1(B). The airplane unfueled, outer wings swept to the park position, six Sparrow missiles installed, a crew member in the forward cockpit, and without survival kit and oxygen, the airplane shall not tip backward when the brakes are suddenly applied at the airplane is moving aft at a speed of 5 MPH.

3.8.2 MAIN LANDING GEAR

3.8.2.1 DESCRIPTION.- Each main landing gear shall consist of a shock strut with a single wheel. The wheel shall retract forward and inwardly into the fuselage. The main landing gears shall not be interchangeable left and right. Provisions for attach fittings in the aft fuselage for towing forward or aft shall not be provided. Provision for barrier engagement shall not be required.

3.8.2.2 WHEELS, BRAKES AND BRAKE CONTROL SYSTEM.

3.8.2.2.1 WHEELS AND BRAKES.- The brakes on the main gears shall be in accordance with Spec MIL-W-5013C, except that the brake energy shall be in accordance with Spec MIL-W-5013F Table I, Method II analysis and based on the aircraft weight conditions as follows:

45 stop condition at airplane weight of 44500 pounds
5 stop condition at airplane weight of 46500 pounds
1 stop condition at airplane weight of 69000 pounds
(See 3.4.1.1.1)

The wheel and brake structural loads shall be in accordance with 3.4.1. The main landing gear wheels shall be in accordance with Spec MIL-W-5013C, except that 4.5.9 of Spec MIL-W-5013E shall apply.

3.8.2.2.2 BRAKE CONTROL SYSTEM.- Applicable, except that the brake system shall be in accordance with Spec MIL-H-5440B-1 vice MIL-B-8584. Brake controls shall be provided for the pilot only. The brake control valve shall be in accordance with Spec MIL-V-5525B.

3.8.2.3 CASINGS AND TUBES.- Applicable, except that pneumatic casings shall be in accordance with Spec MIL-T-5041D and sufficient clearance shall be provided to insure proper operation of the landing gear.

3.8.2.4 SHOCK ABSORBERS.- Applicable, except that struts shall be in accordance with Spec MIL-L-8552C-1 struts shall not be interchangeable right and left.

3.8.2.5 RETRACTING, EXTENDING AND LOCKING.- Applicable.

3.8.2.5.1 RETRACTION. - Applicable, except that a manual control for overriding the safety lock to permit retraction of the alighting gear after takeoff in event of failure of the safety lock system or for emergency retraction of the gear on the ground shall not be provided. A safety switch shall be provided in the landing gear control system to prevent inadvertent retraction when the airplane is on the ground.

3.8.2.5.2 EXTENSION. - Applicable, except that provisions shall be made for emergency lowering of the retractable landing gear in case of power failure. The nose gear strut shall be capable of being extended approximately 16 inches beyond the normal static configuration for catapulting. A switch shall be provided to activate this system. Activation of the main gear scissor-switch shall cause the nose gear strut to return from the catapult configuration to the normal configuration.

3.8.2.5.3 LOCKING. - If overcenter mechanisms are used, a positive device shall be provided to hold the mechanism overcenter. The landing gear lever installation shall be such that it will not be moveable due to vibration, landing impact, or accidental contact when it has been placed in the down or up position.

3.8.2.5.4 ALIGHTING GEAR SWITCHES. - Applicable.

3.8.2.6 DOORS FAIRINGS. - Applicable.

3.8.3 AUXILIARY LANDING GEAR (TAIL WHEEL). - Not applicable.

3.8.4 AUXILIARY LANDING GEAR (NOSE GEAR).

3.8.4.1 DESCRIPTION. - Applicable. The nose landing gear shall consist of a basic strut with dual wheels, except that it shall be equipped for nose gear catapult tow in accordance with Spec MIL-L-22589. The gear shall retract aft into the fuselage. The caster axis of rotation shall be within 9 percent of vertical to the ground line. No provisions, other than frictional damping, shall be made to retain the nose landing gear wheels centered fore and aft during roll back from arrested landings.

3.8.4.2 WHEELS. - Wheels shall be in accordance with Spec MIL-W-5013E and may be of magnesium. The center of the nose-wheel axle shall clear the deck by not less than 6 inches when the tires are flat.

3.8.4.3 CASINGS AND TUBES. - Applicable, except that casings shall be in accordance with Spec MIL-T-5041D.

3.8.4.4 SHOCK ABSORBERS. - Applicable, except that struts shall be in accordance with Spec MIL-L-8552C-1.

3.8.4.5	RETRACTING, EXTENDING AND LOCKING SYSTEM. - Applicable.
3.8.4.6	DOORS AND FAIRINGS. - Applicable.
3.8.4.7	STEERING CONTROL. - Applicable, except that steering shall be in accordance with Spec MIL-S-8812B, and 3.5.4 therein shall not apply.
3.8.4.8	BUMPER WHEEL OR SKID. - Not applicable.
3.8.4.9	NOSE GEAR LAUNCH CATAPULT. - Applicable.
3.8.5	AUXILIARY LANDING GEAR (OTHER).
3.8.5.1	DESCRIPTION. - Not applicable.
3.9	ALIGHTING GEAR (WATER-TYPE). - Not applicable.

3.10 FLIGHT CONTROL SYSTEMS.- Applicable, except that flight control systems and system components common to the F-4J shall be in accordance with Spec SR-169A vice Spec MIL-F-18372. The requirements of Spec MIL-F-8785-4 shall apply, except as otherwise specified herein.

3.10.1 PRIMARY FLIGHT CONTROL SYSTEMS.- Applicable. The longitudinal, lateral, directional control systems, and variable sweep wing shall be power operated and shall be effectively irreversible under power operation. Artificial feel shall be provided for the longitudinal, lateral, and directional control systems.

3.10.1.1 FLIGHT STATION CONTROLS. - Applicable, except that flight controls and components common to the F-4J shall be in accordance with Spec SR-169A vice Spec MIL-F-18372. The primary cockpit controls shall be of the stick and pedal type. Flight controls shall not be provided for the Radar Intercept Officer.

3.10.1.2 LATERAL SYSTEM. - Applicable, except that lateral control systems and system components common to the F-4J shall be in accordance with Spec SR-169A vice Spec MIL-F-18372. Single push-pull rods shall be provided for the aileron and spoiler control systems. Irreversible type power cylinders shall be used for power operation.

3.10.1.3 DIRECTIONAL SYSTEM. - Applicable, except that the rudder control system and system components common to the F-4J shall be in accordance with Spec SR-169A vice Spec MIL-F-18372. Single push-pull rods or single push-pull rods and cables shall be provided for the rudder control system. An irreversible type single power cylinder shall be used for power operation. Rudder travel shall be caused by rudder pedal motion, and autopilot series servo for yaw damping or by the lateral control system when flaps are down. The above systems may cause rudder travel separately or in any combination.

3.10.1.4 LONGITUDINAL SYSTEM. - Not applicable.

3.10.1.5 STABILIZER SYSTEM. - Applicable, except that the horizontal tail system and system components common to the F-4J shall be in accordance with Spec SR-169A vice Spec MIL-F-18372. Single push-pull rods from the cockpit to fuselage station (FS) 142.38, dual push-pull rods to FS 208.23, dual cables to FS 559.50, and a single push-pull rod to the power cylinder shall be provided for the horizontal tail control system. An irreversible type dual power cylinder shall be used for power operation.

3.10.1.6 VARIABLE SWEEP WING CONTROL SYSTEMS. - The variable sweep wing control systems shall be in accordance with Spec MIL-F-18372. The wing sweep shall be controlled by a closed loop hydraulic system, operated by push-pull rods or cables and push-pull rods from the cockpit to servo valves fed by both hydraulic systems and shall be effectively irreversible. The outer-wing (variable portion) shall be variable from 23 degrees to 70 degrees for flight and shall have an over-travel to 75.5 degrees for deck spotting. The variable wing control shall be located in the pilot's cockpit.

3.10.2 SECONDARY FLIGHT CONTROL SYSTEMS. - Applicable, except that secondary flight control systems and system components common to the F-4J shall be in accordance withe Spec SR-169A vice Spec MIL-F-18372.

3.10.2.1 LIFT AND DRAG INCREASING DEVICE SYSTEMS. - Applicable, except that lift and drag increasing device systems and system components common to the F-4J shall be in accordance with Spec SR-169A vice Spec MIL-F-18372. The trailing edge flaps and the leading edge slats shall be power operated.

3.10.2.2 SPEED BRAKES. - Applicable, except that speed brake control systems and system components common to the F-4J shall be in accordance with Spec SR-169A vice Spec MIL-F-18372. The speed brakes shall consist of two extendable surfaces located on the under-surface of the fuselage and shall also act as main landing gear doors.

3.10.3 TRIM CONTROL SYSTEMS. - Applicable, except that trim control systems and system components common to the F-4J shall be in accordance with Spec SR-169A vice Spec MIL-F-18372. The trim control system shall consist of means for trimming the artificial feel system of the power control system for the primary flight control surfaces.

3.10.4 AUTOMATIC FLIGHT CONTROL GROUP (AUTOMATIC PILOT). - An automatic flight control group (AN/ASA-32H (MOD)) shall be provided and shall consist of the following General Electric Company part number, or equivalent.

(a) Accelerometer, Auto-Trim Cutout MX-3422/ASA-32D, P/N 197C281G3
(b) Accelerometer, G-limit MX-3423/ASA-32D, P/N 691C192G1
(c) Accelerometer, Lateral MX-3421/ASA-32D, P/N 197C282G3
(d) Amplifier, Control C-6563/ASA-32H (mod), P/N 756D493G1 (Mod)
(e) Controller, Engaging C-6564/ASA-32H (Mod), P/N 756D493G1 (Mod)
(f) Gyro, Roll-Rate CN-558/ASA-32, P/N 197C324G3
(g) Gyro, Pitch-Rate CN-560/ASA-32, P/N 197C324G3
(h) Transducer, Motional-Pickup TR-175/ASA-32D, P/N 687D960G1
(i) Mounting, RVck MT-2463/ASA-32C (Mod), P/N 756D180G1 (Mod)
(j) Gyro, Yaw-Rate CN-559/ASA-32, P/N 197C325G2
(k) Trim-Cutout Accelerometer MX-3422/ASA-32D, P/N 197C281GS

The automatic flight control group shall provide the following modes of operation:

(1) Stability augmentation (Three Axis)
(2) Relief automatic pilot
(3) Altitude hold
(4) Automatic carrier landing
(5) Automatic vectoring
(6) Precision course direction

Spec SR-74b-1 shall not apply to this equipment or its installation. The automatic flight control group shall utilize vertical and azimuth reference

3.10.4 (Continued)

functions from associated equipment in the airplane. Engagement and disengagement of the automatic flight control group and mode switching shall be by the pilot.

3.10.5 AUTOMATIC STABILITY AUGMENTATION DEVICE. - Applicable as specified in 3.10.4.

3.10.6 STALL WARNING DEVICE. - An artificial stall warning device shall be provided on the left hand rudder pedal.

3.11 ENGINE SECTION.

3.11.1 DESCRIPTION. - The engine section shall include the engine mounts and the fire isolation structure.

3.11.2 CONSTRUCTION. - Applicable.

3.11.3 ENGINE MOUNTS.

3.11.3.1 MOUNTS (RECIPROCATING ENGINES). - Not applicable.

3.11.3.2 MOUNTS (TURBOENGINES). - Applicable.

3.11.4 VIBRATION ISOLATORS. - Applicable

3.11.5 FIREWALLS. - Applicable, except 2000° shall be 2000°F.

3.11.6 thru 3.11.6.3 COWLING AND COWL FLAPS. - Not applicable.

3.11.7 INTEGRAL ENGINE WORKING PLATFORMS. - Not applicable.

3.12 PROPULSION.

3.12.1 DESCRIPTION. - The propulsion system includes the engines and afterburners, engine accessories, propulsion system controls, starting system, lubricating system, fuel system, inlet ducts, and exhaust system.

3.12.1.1 INFRARED RADIATION SUPPRESSION. - Applicable.

3.12.2 MAIN PROPULSION UNIT. - Two General Electric J79-GE-10 turbojet engines in accordance with General Electric Spec E2039, dated 5 October 1965, as modified by a General Electric-McDonnell mutually agreed upon engine envelope drawing dated *, shall be installed. Engine performance characteristics, and thrust coefficients, with a secondary airflow rate of five percent of the primary engine airflow shall be as specified in General Electric Data Deck, R65FPD199, dated May 1966. The quantity of engine compressor bleed air available shall be 9.5 percent of engine airflow and supplied at the airbleed temperatures and pressures as specified in General Electric Spec E2039, dated 5 October 1965. Each J79-GE-10 engine shall be rated as follows:

3.12.2 (Continued)

	Static Thrust (lbs) Sea Level-Std Day	RPM Estimated
Normal	11110	7385
Military	11870	7460
Maximum	17900	7460

The engine flight limit speeds, corrected for inlet duct total head recovery, ICAO Standard Day, shall be as shown on Figure 1.

3.12.2.1 RESIDUAL OIL AND GREASE (RECIPROCATING ENGINES). - Not applicable.

3.12.2.2 RESIDUAL OIL AND GREASE (TURBOENGINES). - Applicable.

3.12.2.3 IGNITION SYSTEM. - The ignition system and shielding shall be as furnished with the engine.

3.12.2.4 DRAINS. - Applicable, except a fuel collector may be provided in the drain system.

3.12.2.5 MAGNETIC CHIP DETECTOR INDICATION. - Not required.

3.12.2.6 COMPRESSOR AIR. - The engine as furnished by the Government shall be suitable for supplying bleed air for cabin pressurization. It is assumed that the bleed air will be free of oil vapor and the design shall be based upon this assumption. If the bleed air, as furnished by the engine compressor is not suitable for cabin pressurization, the installation for filtering or other corrective provisions shall be the subject of separate negotiation. Quantity of air available shall be as specified in 3.12.2.

3.12.3 AUXILIARY PROPULSION UNITS. - Not required.

3.12.4 ENGINE DRIVEN ACCESSORIES.

3.12.4.1 DESCRIPTION. - The hydraulic pumps, generators, tachometer generators, and engine accessories shall be driven by the accessory drive gear boxes. Pads for one AC generator and two hydraulic pumps shall be provided on each engine. The engines shall be furnished with drive pads of sufficient capacity to furnish full control and electrical power on one engine. The contractor shall install constant speed drives capable of furnishing full-rated power and RPM to the AC generator during all flight conditions, excluding windmilling. Sufficient emergency electrical power shall be provided as specified in 3.16.2.4 when both engines are in a flame-out condition.

3.12.4.2 REMOTE GEAR BOXES AND DRIVES. - Not required.

3.12.4.3 VACUUM PUMPS. - Not applicable.

3.12.5 AIR INDUCTION SYSTEM.

3.12.5.1 DESCRIPTION. - Two independent and identical air induction systems shall be provided, one system for each engine. The system shall be comprised of a ramp assembly, a variable bypass bellmouth and an auxiliary air door.

3.12.5.2 AIR INTAKES.

3.12.5.2.1 AIR INTAKES (RECIPROCATING ENGINES). - Not applicable.

3.12.5.2.2 AIR INTAKES (TURBOENGINES). - The permissible variation in total pressure at the engine compressor inlet face in steady level flight shall not exceed a linear variation from ±8 percent at Mach 0 to ±6 percent at Mach 0.3, ±6 percent from Mach 0.3 to Mach 1 and shall not exceed a linear variation of ±6 percent at Mach 1 to ±8 percent at Mach 2 excluding normal inlet boundary layer. The air intakes shall be located in each side of the fuselage and shall incorporate a boundary layer removal configuration.

3.12.5.3 ICE PROTECTION SYSTEM.

3.12.5.3.1 thru 3.12.5.3.3.1 AIR INTAKE PREHEATER (RECIPROCATING ENGINES). - Not applicable.

3.12.5.3.4 ICE PROTECTION (TURBOENGINES). - An anti-icing system for anti-icing of the engine nose dome shall be provided and shall operate in conjunction with the engine anti-icing system. The engine anti-icing switch shall be used to control the engine bleed air to the nose dome. Cockpit indication of anti-ice airflow to the bullet nose shall be provided. An ice detection system shall not be required.

3.12.5.4 DUST PROTECTION SYSTEM (RECIPROCATING ENGINE). - Not applicable.

3.12.5.5 INTERCOOLERS (RECIPROCATING ENGINES). - Not applicable.

3.12.6 EXHAUST SYSTEM.

3.12.6.1 DESCRIPTION. - Applicable.

3.12.6.2 EXHAUST SYSTEMS (RECIPROCATING ENGINES). - Not applicable.

3.12.6.3 EXHAUST SYSTEMS (TURBOENGINES). - Applicable.

3.12.6.4 THRUST REVERSERS (TURBOJET ENGINES). - Not required.

3.12.6.5 NOISE SUPPRESSION DEVICES. - Not required.

3.12.7 COOLING SYSTEM.

3.12.7.1 DESCRIPTION. - Special cooling provisions for the engines other than general compartment ventilation need not be provided with the secondary air flow as specified in 3.12.2. An auxiliary air door to provide cooling air during ground operation shall be provided. An unclosed auxiliary air door indication on the pilot's caution light panel shall be provided. The indicator shall indicate, that the auxiliary air doors have not completely closed.

3.12.7.2 thru 3.12.7.2.1 COOLING SYSTEM (RECIPROCATING ENGINES). - Not applicable.

3.12.7.3 COOLING SYSTEMS (TURBOENGINES). - The cooling system shall meet the requirements of Spec MIL-C-8678.

3.12.7.3.1 TEMPERATURE INDICATING EQUIPMENT. - Applicable, except that an exhaust gas temperature indicator shall be installed.

3.12.8 LUBRICATINS SYSTEM.

3.12.8.1 DESCRIPTION. - Oil supply for the constant speed drive and AC generators shall be obtained from the engine oil system. Provisions shall be included to prevent contaminated oil from reaching the engine oil tank in the event of a failure of the constant speed drive. The lubricating system shall be furnished as an integral part of each engine, except that the air-oil cooler, oil cooler pressure relief valve, constant speed drive filter and the necessary lines for filling, venting, and draining the engine oil system shall be furnished by the airplane contractor and may be engine mounted.

3.12.8.2 OIL QUANTITY GAGING. - A two-point warning oil quantity indication system shall be provided. Low level engine oil quantity indicator lights shall be located on the telelight panel. A Trans-Sonic Company, type 4310 distat detector, or equivalent, shall be provided. This detector shall detect a low level oil quantity condition in either engine oil tank and in turn provide a signal to illuminate the appropriate warning light. During flight, a low oil quantity condition shall exist when the oil drops to 3.2 gallons or less. A toggle switch labeled OIL QUANTITY shall be located in the forward cockpit. For ground checkout operations this toggle switch may be turned ON, and the appropriate indicator light shall illuminate to indicate when oil in either or both tanks is 4.5 gallons or less. The oil quantity sensors, located inside the oil tanks shall be furnished with the engine mounted oil tanks as GFAE.

3.12.8.3 OIL TANKS. - The engine oil tank shall be as furnished by the engine manufacturer.

3.12.8.3.1 OIL TANK CAPACITY. - The engine oil capacity down to the constant speed drive cutoff level shall be no less than 2.8 gallons.

3.12.8.3.2 EXPANSION AND FOAMING SPACE. - Not applicable.

3.12.8.4 PIPING AND FITTINGS. - Piping and fittings and their installation shall be in accordance with Spec MIL-I-18802A, except that all Teflon, or equivalent, flexible hose assemblies shall use 6061-T6 aluminum alloy or stainless steel sockets. Engine mounted hose and tube clamps shall have cushion material made of Teflon, or equivalent, impregnated asbestos with wire reinforcement or cushion material of fiberglass, as applicable. Oil return lines shall be 3/4 inches in diameter. Double flaring of aluminum alloy tubing used in vent and drain lines shall not be required.

3.12.8.5 TEMPERATURE AND SURGE CONTROL. - Not applicable.

3.12.8.6 DILUTION AND WARM-UP PROVISIONS. - Not applicable.

3.12.8.7 SHUT-OFF VALVE AND CONTROL (MULTIENGINE AIRPLANES). - Not applicable.

3.12.8.8 DRAINAGE PROVISION. - Drainage provision shall be made for the oil system compatible with that furnished on the engine.

3.12.8.9 DEAERATION PROVISION. - Not applicable.

3.12.8.10 OIL TANK FILLER UNITS. - Provision for pressure filling the oil tank shall be made.

3.12.8.11 VENT AND BREATHER SYSTEM. - The oil tank, furnished by the engine manufacturer, shall be pressurized to 4.5 $\pm$ 0.5 psi above ambient pressure by an engine-supplied pressurizing valve, which is also an overboard vent for the oil tank and sump.

3.12.9 FUEL SYSTEM.

3.12.9.1 DESCRIPTION. - Applicable, except that the expansion space shall be 3 percent. The fuel system shall include tanks and plumbing, boost and transfer system, fueling and defueling system, and quantity and pressure gaging equipment. The fuel system shall be in accordance with Spec MIL-F-17874B, except as specified herein.

3.12.9.1.1 The fuel system shall be designed for normal operation on fuel conforming to Spec MIL-F-5624B-1, Grade JP-5 or a mixture of 3 parts by volume of fuel conforming to Spec MIL-F-5624B-1, Grade JP-5 to one part of fuel conforming to Spec MIL-F-5572A, any grade, shall be possible except that additional pumping capacity and the increased pressure required in 3.3.5 of Spec MIL-F-17874B by use of Spec MIL-F-5572A fuel shall not be required and restrictions in rate of climb and service ceiling when operating on Spec MIL-F-5572A fuel shall be permissible. Consideration shall be given to the use of Spec MIL-F-5624B-1, Grade JP-4, fuel to the extent that balance conditions and fuel system components will be suitable for use with the alternate fuel.

3.12.9.1.2 Fuselage tank air pressure shall be automatically dumped upon extension of the landing gear, if the automatic fuel transfer is not in operation. If the automatic fuel transfer is in operation, the fuselage tank air pressure only shall be automatically dumped upon extension of the landing gear, and the external tank air pressure shall be automatically dumped upon compression of the landing gear at touchdown.

3.12.9.1.3 A low level warning system to indicate the fuel level in fuel tank 2 (upper and lower) at 1800 $\pm$ 200 pounds, with the airplane in a level attitude, shall be provided in addition to the gaging system. The signal for the low level warning system shall be obtained from a circuit independent of the gaging circuit.

3.12.9.1.4 In the event of a single functional failure in the feed system, the system shall maintain a pressure of not less than fuel true vapor pressure plus 5 psi at the engine fuel inlet. The above pressure will be supplied at maximum power fuel flows at the best rate of climb Mach number at any altitude on a standard day. A single functional failure shall include the loss of one fuel boost pump.

3.12.9.1.5 External fuel transfer shall be accomplished by use of regulated engine compressor bleed air pressure. An emergency or redundant external transfer system shall not be provided.

3.12.9.1.6 The fuel available and the flow rate, during negative g condition, shall be as necessary to permit flight at any altitude on a standard day without augmentation for a duration of a minimum of 10 seconds with 25 percent internal fuel remaining. With augmentation, the engine fuel inlet pressure during negative g operation shall be at least 5 psig above the true fuel vapor pressure at subsonic speeds at all altitudes above 15,000 feet, and at supersonic speed at all altitudes above those defined by a linear variation in altitude with Mach number from 15,000 feet at Mach 1.0 to 42,000 feet at Mach 2.0. The feed systems shall have no zero g capability.

3.12.9.1.7 A refuel selector switch shall be provided on the fuel panel in the front cockpit. This switch shall provide the pilot with the option of in-flight fueling internal and external tanks, or internal tanks only. A switch in or near the right main wheel well together with the refuel selector in the forward cockpit shall provide an option of ground fueling internal and external tanks, or internal tanks only.

3.12.9.1.8 An automatic fuel transfer system shall be provided, and shall be automatically actuated at 2200 ± 200 pounds of fuel in fuel tank 2 (upper and lower) with the airplane in a level attitude. Once activated, the transfer circuit shall be locked on to prevent cycling. Deactivation of the automatic fuel transfer system will be achieved, when either in-flight or ground refueling is selected.

3.12.9.2 FUEL PUMPS. - Two electric fuel boost pumps and six electric fuel transfer pumps shall be provided. The fuel pumps shall be compatible with Spec MIL-F-17874B, except as specified in 3.12.9.1.4 and 3.12.9.1.6.

3.12.9.3 FUEL TANK (FIXED). - The fuselage fuel tanks shall be of the bladder type in accordance with Spec MIL-T-6396A(1). Inner wing fuel tanks shall be of the integral type. The finishing and sealing of the integral wing fuel tanks shall be in accordance with McDonnell Spec 32-90000. Finishing of the fuselage fuel tank cavities shall be as follows:

(1) All detail parts shall be treated in accordance Spec MIL-C-5541.

(2) All detail parts shall be spray coated with one coat of zinc chromate primer (Spec MIL-P-8585).

(3) During and after assembly, cavities shall be sealed to a fluid-tight condition using Spec MIL-S-8802C sealant compound. A topcoat sealant shall not be applied.

3.12.9.3.1 FUEL TANK CAPACITY. - The total internal usable fuel capacity with 3 percent expansion space shall not be less than 2514 gallons. The approximate capacities (not to be used for inspection purposes) of the fuel tanks shall be as follows:

3.12.9.3.1 (Continued)

Location	Capacity
Fuselage, No. 1	377 gallons
Fuselage, No. 2 (Upper)	473 gallons
Fuselage, NO. 2 (Lower)	117 gallons
Fuselage, No. 3	226 gallons
Fuselage, No. 4	180 gallons
Fuselage, No. 5	375 gallons
Fuselage, No. 6	273 gallons
Fuselage, No. 7	102 gallons
Internal Wing (Inner)	391 gallons
Total	2514 gallons

3.12.9.3.2 FUEL TANK INSTALLATION. - Applicable, except as specified in 3.2.13.3.

3.12.9.4 FUEL TANKS (AUXILIARY DROPPABLE). - Internal provision consisting of fuel lines, valves, and fittings shall be made for carrying auxiliary fuel tanks as special loadings:

One 600 gallon external tank (fuselage)

Two 600 gallon external tanks (wing)

The airplane strength provisions for carrying the fuel tanks shall be as specified in 3.4.1.1. The tanks shall be contractor furnished, contractor installed. The design load requirements for the tanks and attachments shall be compatible with the strength provisions of 3.4.1.1 for the airplanes with external tanks. An Aero 27A rack, suitable plumbing, wiring, and fin restraint fittings to permit carriage of the external fuselage tank shall be provided. Wing support fittings, suitable plumbing, and wiring to mate a wing pylon shall be provided for the external wing tanks. Fuel gaging provisions shall not be made. Transfer indication shall be provided by the contractor. The fuel system shall permit pressure filling of the external tanks from the in-flight refueling system or ground refueling system.

3.12.9.5 VENT SYSTEM. - Spec MIL-F-17874B shall apply.

3.12.9.6 PIPING AND FITTINGS. - Piping and fittings, and their installation shall be in accordance with Spec MIL-I-18802A, except that engine mounted hose and tube clamps shall have cushion material made of Teflon, or equivalent, impregnated asbestos with wire reinforcement or cushion material of fiberglass, as applicable. Fuel and vent lines may be routed through fuel tanks. Fuel lines located where the fire prevention requirements of 3.2.13.2 are applicable (capable of enduring a 2000°F ± 50° flame for five minutes without leakage) shall be of an approved type. Spec MIL-H-5511A or Resistoflex R3800, Aeroquip 647, Aeroquip AE111 or stainless steel tubing for the purpose of this specification shall be considered as approved types. Other lines may be aluminum alloy or an approved flexible type. Double flaring of aluminum alloy tubing used

3.12.9.6 (Continued)

in vent and drain lines shall not be required. Aluminum tubing with a wall thickness of .028 and .035 may be used for vent lines in sizes up to 3 inches outside diameter. Stainless steel tubing with a wall thickness of .028 may be used for the fuel vent system.

3.12.9.7 VALVES. - Applicable.

3.12.9.8 STRAINERS AND FILTERS. - Strainers and filters shall be as required in Spec MIL-F-17874B, except that airframe mounted fuel strainers shall not be provided. Cockpit indication of impending fuel filter by-pass shall be provided for the pilot. The main fuel pump filter installed on the J79-GE-10 engine shall also incorporate an impending by-pass indicating switch, from which wiring shall be provided to the caution light panel in the forward cockpit.

3.12.9.9 FUEL QUANTITY GAGING AND FLOWMETERS. - Applicable, except that a capacitance type fuel quantity gage system in accordance with Spec MIL-G-7818-1 without vacuum tubes shall be provided. The system installation shall be in accordance with Spec MIL-G-7940, except that 4.5.2 shall be deleted and changed to read, "When any production change affecting the fuel tank system or gage equipment is made, the first production airplane or an airplane as near the first depending on airplane delivery schedules, the 50th and every 100th production airplane thereafter shall be subjected to the following tests." Calibration plates shall not be provided. Mounting provision shall be furnished on the engine for the transmitter.

3.12.9.10 DRAINAGE PROVISIONS. - Applicable, except that fuel cell drains will be capable of draining all fluid only at static ground attitude.

3.12.9.10.1 DRAINAGE (TURBOENGINES). - A fuel collector may be provided in the drain system.

3.12.9.11 FUEL VAPOR INERTION. - Not required.

3.12.9.12 FUEL EVAPORATION CONTROL. - The vent system shall incorporate provisions to minimize fuel evaporation loss, except that it shall be permissible to use a compressed air source for tank pressurization.

3.12.9.13 REFUELING PROVISION.

3.12.9.13.1 GROUND REFUELING. - Gravity refueling provisions shall not be required. Fueling shall be accomplished through the pressure fueling connection provided on the side of the airplane and the in-flight refueling probe. External electrical power shall be required to precheck fuel level control valves. Level control valves shall be of a fail-open type. Defueling shall be accomplished through the fueling connection provided on the side of the airplane. Running of fuel boost and transfer pumps and pressurizing of external tanks during defueling shall be acceptable.

3.12.9.13.2 AIR REFUELING PROVISION. - An in-flight refueling "shoulder probe" installation shall be provided. The probe shall be power operated for extension and retraction. A light shall be provided to illuminate the probe for after dark refueling operations. The intensity of the light shall be controlled by the pilot and a separate switch shall be provided for turning the probe light "on" and "off". In addition, an indicator light shall be provided to inform the pilot when the probe is unlocked for in-flight extension or retraction. The light shall be automatically de-energized when the probe is in a locked position. A grounding receptacle on the in-flight refueling door shall not be required.

3.12.9.13.3 REFUELING TANKER PROVISIONS. - The airplane shall be capable of carrying a modified Government Furnished Douglas Model D-704 air refueling store, control panel and control panel bracketry configured in accordance with DWG 5547000-523. The contractor shall furnish the necessary airplane wiring. Fuel gaging provisions for the store shall not be required. Airplane provisions shall permit pressure filling from the airplane refueling system and transferring of fuel from the parent airplane to the store. The aft cockpit instrument light dimming circuit shall control the intensity of the buddy fuel panel indicator lights when the other instrument lights are on.

3.12.9.14 DEFUELING PROVISIONS. - See 3.12.9.13.1.

3.12.9.15 FUEL JETTISONING. - Provision shall be made for jettisoning all internal fuel except tank 2 (upper and lower). The transfer pumps shall provide power for jettisoning fuel. The first 90 percent of jettisonable internal fuel (1730 gal.) shall be jettisoned at a rate of at least 325 gpm. Ninety-eight percent of the jettisonable internal fuel shall be jettisoned in not more than 6 minutes. External fuel is jettisoned by dropping the tanks.

3.12.10 thru 3.12.10.4 WATER-INJECTION SYSTEM (RECIPROCATING ENGINES). - Not applicable.

3.12.11 PROPULSION SYSTEM CONTROLS.

3.12.11.1 DESCRIPTION. - Applicable. The propulsion system controls shall consist of the power control assembly, master switches, starting switches and ignition switches.

3.12.11.2 ENGINE CONTROL SYSTEM.

3.12.11.2.1 CONTROLS (TURBOENGINES). - Applicable, except that the IDLE and MILITARY positions in the throttle quadrant shall correspond to the center of the flat spots on the engine power lever within $\pm 2^{\circ}$. The engine throttle handle shall have incorporated a microphone switch, and a speed brake/Approach Power Compensator System emergency disengage switch. The pilot's engine power control lever quadrant shall include the following provisions for each engine:

(1) Off Position (Full Aft). - This position corresponds to the cut-off position on the engine fuel control.

(2) Idle Position. - This position corresponds to the idle position of the engine power lever. A gated throttle shall prevent inadvertent retardation to the OFF position.

(3) Military Position. - This position corresponds to the military position on the engine power lever.

(4) Afterburner Position. - A lateral shift motion shall be necessary to position the power lever to enter the afterburner modulation range.

A device shall be provided to prevent inadvertent retraction of the power levers during catapulting. In addition to the power lever, two engine master switches shall be provided. These switches shall:

(a) Start the fuel boost and transfer system.

(b) In OFF position, stop (a) above.

3.12.11.2.2 CONTROLS (MULTIENGINE). - Applicable, except that the RPM of the individual engines shall be the same within 10 percent over the operating range except where the governor characteristics exceed 50 percent of this amount. A micro-idle adjustment device shall be installed in the stainless steel throttle teleflex conduit to permit adjustment of throttle if RPM is off one or two percent.

3.12.11.2.2.1 AN/ASN-54(V) APPROACH POWER COMPENSATOR SYSTEM (APCS). - An APCS shall be installed for automatic throttle control of engine thrust throughout the flight range of the landing approach, such as descent, turns, waveoff, and climbs without inducing stalls and shall consist of the following GFAE components:

3.12.11.2.2.1 (Continued)

(a) Accelerometer, Aircraft; MX-6320/ASN-54(V).

(b) Amplifier, Control; AM-4376/ASN-54(V).

(c) Computer, Throttle Control; CP-832/ASN-54(V).

The APCS shall operate in conjunction with the following:

(1) Automatic Landing System (AN/SPN-10).

(2) Angle of Attack Transmitter.

(3) Integrated Throttle Boost and Servo Actuator (GFAE, installed on the engines by the engine manufacturer).

Associated aircraft control switching provisions shall be provided in the pilot's cockpit. These controls shall consist of a three-position APCS select switch, a three-position free air temperature switch, a three-position engine select switch, and an emergency disengage switch. Main landing gear compression or actuation of the emergency disengage switch shall return the APCS select switch to STANDBY position.

3.12.11.3 INDUCTION AIR CONTROLS.

3.12.11.3.1 ALTERNATE AIR VALVES (RECIPROCATING ENGINES). - Not applicable.

3.12.11.3.2 AIR DUCT VALVES (TURBOENGINE). - Induction air duct shut-off valves shall not be provided.

3.12.11.4 STARTER AND PRIMER CONTROLS.

3.12.11.4.1 STARTER AND PRIMER CONTROLS (RECIPROCATING ENGINES). - Not applicable.

3.12.11.4.2 STARTER CONTROLS (TURBOENGINES). - See 3.12.12.1.

3.12.11.5 thru 3.12.11.5.2 PROPELLER CONTROLS. - Not applicable.

3.12.11.6 COOLING AIR CONTROLS. - Not applicable.

3.12.11.7 WATER-INJECTION CONTROLS (RECIPROCATING ENGINES). - Not applicable.

3.12.11.8 MANUAL FUEL CONTROL SYSTEM (TURBOENGINES). - Not required.

3.12.11.9 REVERSE THRUST CONTROLS. - Not required.

3.12.12 STARTING SYSTEM.

3.12.12.1 DESCRIPTION. - Applicable. The starting system shall consist of the air impingement nozzles, ducting, wiring, switches, etc., for connecting to the external starting package which shall include the gas turbine power unit and starting control valve. (See 3.13.1).

3.12.12.2 STARTING INSTALLATION. - The air impingement nozzles shall be furnished on the engine. The impingement starting check valve shall be Contractor furnished equipment. Control of starting air shall be provided through separate airframe mounted control valves for each engine. Electrical power for these valves shall be controlled by the engine start switch located in the cockpit. This power shall be provided by means of an external AC power supply connected to the airplane external AC power receptacle to energize the airplane transformer rectifiers which shall provide airplane DC power for operation of the airplane mounted impingement start valve and starter pod air control valve. An interlock switch, actuated by the impingement starter door, shall be provided to remove all electrical power from the impingement starting valve. Ground starts at any facility with any unit, which has the required airflow capacity and is compatible with the airplane connections, shall be accomplished without the need for an external DC power source. Electrical power for the ignition system shall be available to accomplish air starts as specified in 3.16.2.4.

3.12.12.2.1 CARTRIDGE AND COMBUSTION STARTERS. - Not applicable.

3.12.12.3 BOOSTER DEVICES. - Not applicable.

3.12.12.4 PRIMING SYSTEM. - Not applicable.

3.12.13 thru 3.12.13.7.3 PROPELLER. - Not applicable.

3.12.14 thru 3.12.14.3 LIQUID ROCKET-ENGINE PROPULSION SYSTEM. - Not applicable.

3.13 AUXILIARY POWER PLANT.

3.13.1 DESCRIPTION. - The gas turbine compressor, BuAer Model CP-5 (with streamline enclosure) in accordance with Specs MIL-P-8686(ASG) and MIL-U-19728A(AER), starting control valve, and accessories shall be furnished by the Government as an external starting package which shall be considered Ground Service Equipment. Provision shall be made for readily connecting to the external starting package as a source of compressed air for engine starting. The external starting package may be carried on the airplane as specified in 3.18.6.3 in which event the weight of the package shall not be included under normal weight.

3.13.2 INSTALLATION. - Not applicable.

3.13.3 ACCESSORIES AND CONTROLS. - Applicable as required.

3.14 INSTRUMENTS AND NAVIGATIONAL EQUIPMENT.

3.14.1 INSTRUMENTS. - Applicable, except delete MIL-I-18373 and substitute SR-74b(1).

(1) The following instrument installations shall be convenient to the pilot:

QTY	INSTRUMENT
One	Wing Position Indicator (CFE)
One	Mach, Airspeed and Command (CFE)
One	Radar Altimeter (GFAE)
One	Accelerometer ABU-4A (GFAE)
One	AAU-19/A Servoed Altimeter (GFAE)
One	Clock (GFAE)
Two	Tachometer Indicators (GFAE)
Two	Fuel Flow Indicator (CFE)
Three	Landing Gear Position Indicator (CFE)
One	Angle of Attack Indicator (CFE)
Two	Nozzle Position Indicator (CFE)
One	Fuel Boost Pressure Indicator (GFAE)
One	Two-Inch Attitude Indicator (GFAE)
One	Discrete Readout Indicator (CFE)
One	Radar Warning Indicator (CFE)
One	Flap (TE) Position Indicator (CFE)
One	Pneumatic Pressure Gage (CFE)
Three	Hydraulic Pressure Indicator (GFAE)
One	Rudder Position Indicator (CFE)
One	Trim Position Indicator (Stabilator) (CFE)
One	Azimuth, Elevation, Range Indicator (GFAE)

QTY	INSTRUMENT
Two	Approach Indexers (CFE)
One	Slat (LE) Position Indicator (CFE)
One	Optical Display (CFE)
Two	Exhaust Gas Temp. Indicator (GFAE)
One	Vertical Velocity Indicator (GFAE)
One	True Airspeed Indicator (CFE)
One	Fuel Quantity Indicator (CFE)
One	Remote Radio Channel Indicator (GFAE)
Three	Fuel Transfer Indicator Lights (CFE)
One	Attitude-Director Indicator (CFE)
One	Horizontal Situation Indicator (CFE)
One	Liquid Oxygen Indicator (CFE)
One	Compass Standby, MB-1 (GFAE)
One	Cabin Pressure Altitude Indicator (GFAE)
Two	Oil Pressure Indicator (GFAE)
One	Wing Trim Position Indicator (CFE)

(2) The following instrument installation shall be convenient to the radar intercept officer.

QTY	INSTRUMENT
One	Indicator Airspeed and Mach Number (GFAE)
One	AAU-19/A Servoed Altimeter (GFAE)
One	Clock Elapsed Time (GFAE)

3.14.1 (Continued)

QTY	INSTRUMENT
One	Discrete Readout Indicator (CFE)
One	True Airspeed Indicator (CFE)
One	Two-inch Remote Attitude Indicator (GFAE)
One	Bearing - Distance Heading Indicator (GFAE)
One	Cabin Pressure Indicator (GFAE)
One	Liquid Oxygen Indicator (CFE)
One	Tactical Situation Display Indicator (GFAE)
One	Range/Rate Azimuth Indicator (GFAE)

3.14.1.1 COMPASS SYSTEM. - The compass system shall consist of a contractor furnished remote compass transmitter in accordance with MIL-T-19576A,operating in conjunction with the compass components of the (SR-3) Heading and Attitude Reference Set. Filtered magnetic heading data from the remote compass transmitter shall be available in both the primary and backup mode in both cockpits. The visual presentation of directional information from the compass and gyro reference source shall be presented on the all-attitude indicator (3 axis) and the rotating compass cards of the horizontal situation indicator and the bearing-distance-heading indicator. The compass shall be installed in accordance with MIL-C-7762. Each airplane shall be swung and the compass shall be compensated in accordance with the requirements of Spec MIL-STD-765, except tests may be conducted with the engines off providing the resulting errors do not exceed those permitted by 4.4 of Spec MIL-STD-765. A compass correction card and holder shall be provided in each cockpit.

3.14.1.2 COMPASS. - A conventional magnetic compass shall be installed in the pilot's cockpit for navigation. The compass shall be installed in accordance with Spec MIL-C-7188, except Type E single conductor, shielded wire with Teflon or equivalent jacket over the shield, shall be used in lieu of the twisted two wire system. The compass mounting may be of a rigid construction in lieu of a vibration insulated mounting. Each airplane shall be swung and shall be compensated in accordance with the requirements of Spec MIL-STD-765, except that tests may be conducted with engines off provided it can be shown that the resulting errors do not exceed those permitted by 4.4 of Spec MIL-STD-765. A compass correction card and holder shall be provided in the pilot's cockpit.

3.14.1.3 ALL-ATTITUDE INDICATION AND COMPASS REFERENCE SYSTEM. - An inertial navigation system shall be provided as the primary vertical and directional reference system.

3.14.1.4 SECONDARY GYRO REFERENCE SYSTEM. - The Heading and Attitude Reference Set shall be provided and shall function as a flight reference system. The system shall have 360 degrees of freedom in roll, pitch and azimuth. During normal operation of the airplane

3.14.1.4 (Continued)

the SR-3 platform shall operate as an independent backup attitude and azimuth reference to the Inertial Navigation/Digital Bombing System. A pilot operated switch shall be provided to manually select either the SR-3 or the Inertial Navigation/Digital Bombing System attitude-azimuth reference. Roll and pitch attitude reference signals, and the azimuth attitude reference signal shall be obtained from the SR-3 platform. Attitude and azimuth signals obtained shall be continuously displayed on the Attitude Director Indicator in the forward cockpit in addition to being supplied to other subsystems in the airplane.

3.14.1.5 HEADING AND ATTITUDE REFERENCE SYSTEMS COMPARISON INDICATOR. - Provisions shall be made to display on the Attitude Director Indicator, in the forward cockpit, the heading and vertical information from either the primary or secondary gyro reference system.

3.14.1.6 ALL-ATTITUDE INDICATOR. - Applicable.

3.14.1.6.1 STANDBY ATTITUDE INDICATOR. - A two-inch Attitude Indicator shall be installed in both cockpits.

3.14.1.7 COUNTING ACCELEROMETER. - A counting accelerometer group consisting of a transducer, MS25447-6 and an indicator MS25448-1 conforming to Spec MIL-A-22145, shall be installed in accordance with Spec EI-345. The transducer shall be located as close to the airplane cg as practicable as approved by NAMC (ASL) and shall be energized only when the landing gear is in the retracted (Up) position.

3.14.1.8 FLIGHT LOAD RECORDER. - Not required.

3.14.1.9 AIR DATA COMPUTER. - A Central Air Data Computer (CADC) employing microelectronic circuitry shall be provided. The CADC shall compute and furnish compensated air data, angle-of-attack, and altitude reporting information to the associated aircraft equipment. Compensated air data information shall be provided to the following equipment:

(a) Automatic Flight Control Group
(b) Airborne Weapon Control System (AWCS)
(c) Inertial Navigation/Digital Bombing System (INDBS)
(d) Engine Inlet Duct Ramp Control
(e) Lead Computing Optical Sight Set (LCOSS)
(f) Data Link System

The Angle-of-attack Transmitter shall provide a local angle-of-attack signal directly to the angle-of-attack indicator. The approach indexers shall function in the following manner:

3.14.1.9 (Continued)

(1) An amber light shall be energized over a range covering approximately 3° which shall include the optimum approach angle-of-attack. (The position and spread of this range shall be readily adjustable by field personnel).

(2) A green light shall be energized when the angle-of-attack exceeds the optimum approach angle-of-attack range (amber range).

(3) A red light shall be energized when the angle-of-attack is less than the optimum approach angle-of-attack range.

(4) Two approach indexers with dimming provisions shall be mounted forward and above the glare shield and instrument panel, equidistant from the centerline of the airplane. These indexers shall not obstruct the pilot's visibility and shall give an indication of the angle-of-attack within a narrow range on either side of the indexed optimum approach.

(5) Flashing angle-of-attack approach lights shall be provided. A cockpit mounted, guarded switch shall be provided which will in one position, allow the approach lights to flash if the hook is not "DOWN" for normal carrier operation, or in the other position, burn steady with the hook "UP" for FCLP and carrier "touch and go" practice.

In addition to providing an electrical signal of angle-of-attack to operate the angle-of-attack indicator, the transmitter shall be capable of providing an electrical signal of local angle-of-attack for the Airborne Weapon Control System. Altitude Reporting shall provide altitude information to the GFAE AAU-19/A servoed altimeters installed in each cockpit and to the GFAE AN/APX-72 AIMS Transponder for air-to-ground transmission of the aircraft's altitude. The CADC shall operate in conjunction with the following associated equipment:

(1) Pitot Static System
(2) Automatic Flight Control Group
(3) Airborne Weapon Control System (AWCS)
(4) Inertial Navigation/Digital Bombing System (INDBS)
(5) Engine Inlet Duct Ramp Control
(6) Lead Computing Optical Sight System (LCOSS)
(7) Data Link (AN/ASW-27)
(8) AN/APX-72 AIMS Transponder
(9) C-6280(P)/APX Transponder Set Control

3.14.1.10 FLIGHT DIRECTOR GROUP. - The flight director group shall provide an integrated display of the navigation situation of the airplane. The flight director group shall consist of the following:

(a) Flight director computer (CFE)

(b) Flight director mode selector control (CFE)

(c) Horizontal Situation Indicator (CFE)

The flight director computer shall provide navigation information to the HSI and steering information to the Attitude Director Indicator (ADI). All signals for the HSI and signals for the meter and warning flag portions of the ADI shall pass through or originate in the computer. The flight director computer shall have no control over the attitude portion of the ADI. Steering signals shall be computed to provide the pilot with flight direction information when flying either manually or remotely set headings and manually selected TACAN radials. These computed signals, together with the required flag signals and off scale signals shall be supplied by the computer to the ADI. The HSI shall provide horizontal or plan view of the aircraft with respect to the navigation situation. The flight director mode selector control shall be located in the pilot's main instrument panel and shall provide the following modes: TGT, TGT/IND, HDG, TACAN, D/L, and NAV COMP.

3.14.1.11 ENGINE ANALYZER (RECIPROCATING ENGINES). - Not applicable.

3.14.1.12 PITOT TUBES AND VENTS. - An electrically-heated pitot tube and static system shall be provided and installed in accordance with Spec MIL-I-6115A-1, except that the static pressure source shall be determined by the contractor and stainless steel tubing of 1/4 inch O.D. with .020 inch wall thickness in accordance with Spec MIL-T-6845 shall be used. The requirements for installation error as compensated by the CADC, shown in Figure 7, shall be substituted for 4.2.6.3 of Spec MIL-I-6115A-1.

3.14.2 NAVIGATIONAL EQUIPMENT. - A chartboard and computer assembly shall not be required.

3.14.2.1 thru 3.14.2.4 Not Applicable.

SD-513-2

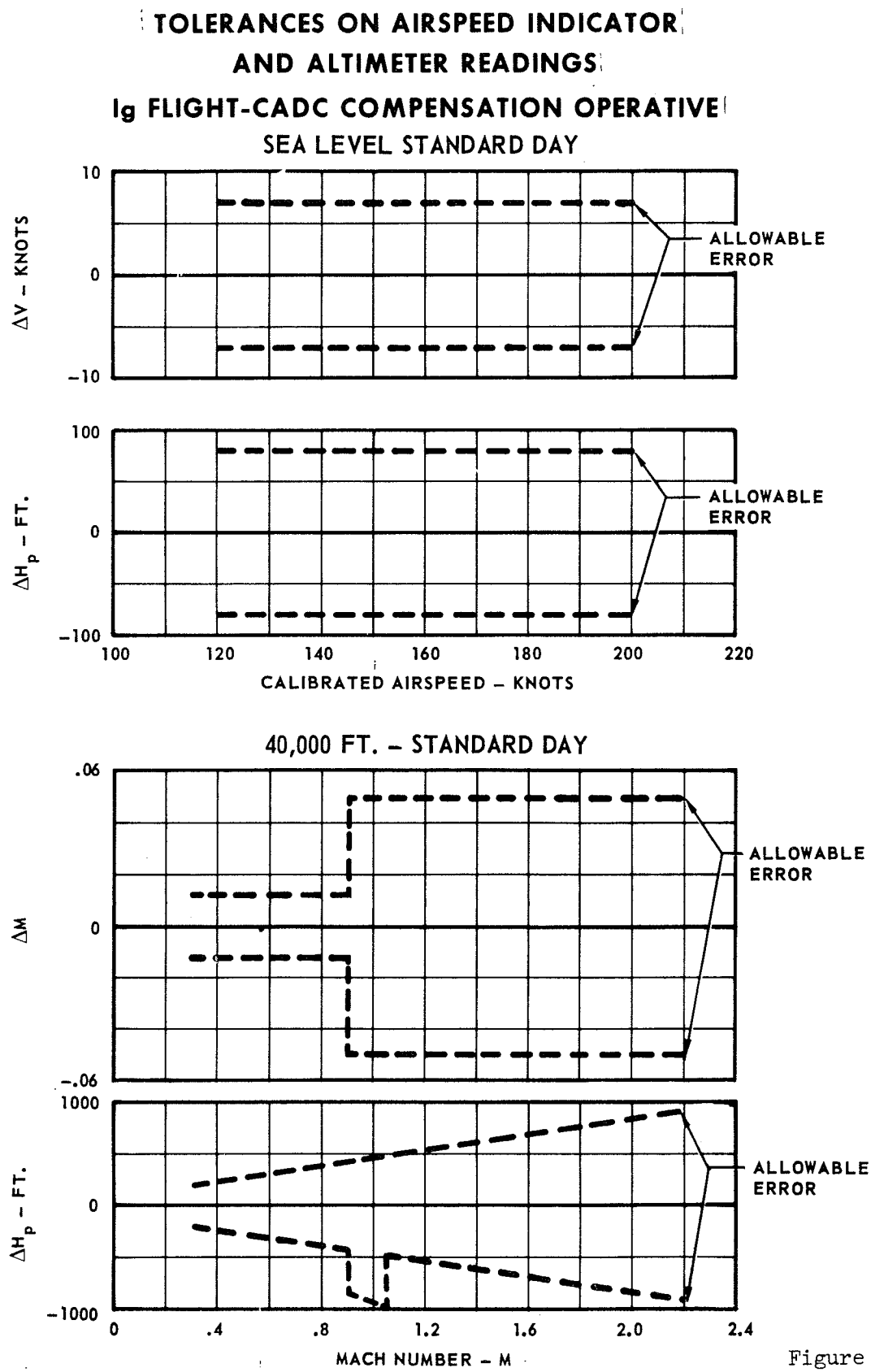

Figure 7

3.15 HYDRAULIC AND PNEUMATIC SYSTEMS.

3.15.1 HYDRAULIC SYSTEM. - Applicable, except that the hydraulic systems and system components common to the F-4J shall be in accordance with Spec MIL-H-5440B-1. New designed hydraulic systems and system components shall be in accordance with Spec MIL-H-5440D, Type II, 3000 psi class.

3.15.1.1 DESCRIPTION. - Three independent hydraulic systems of the pressurized type employing 3000 psi operating pressure shall be provided. Two systems shall be used to supply the power for the ailerons, spoilers, all movable horizontal tail, and variable sweep wing (See 3.10.1.6). The rudder and utility components shall be powered from one independent system.

3.15.1.1.1 EMERGENCY SYSTEMS. - Emergency operation shall be provided, for those hydraulically operated utility installations which are necessary for safety in flight or safety in landing. Hydraulic supply for the variable sweep wing, ailerons, spoilers, and stabilator shall be provided through one of the two power control hydraulic systems when a single engine flameout condition occurs. Emergency hydraulic power shall not be provided when both engines are in a flame-out condition.

3.15.1.1.2 PUMPS. - The hydraulic systems shall be powered by engine driven pumps of the variable volume type. Spec MIL-P-19692B shall apply.

3.15.1.1.3 FITTINGS. - Approved straight threaded, flared tube fittings may be used with the following limitations:

(1) Male threaded aluminum alloy fittings below a -8 size shall not be used with stainless steel tubing.

(2) Female threaded aluminum alloy fittings above a -8 size shall not be used with high pressure tubing.

(3) Carbon steel fittings shall not be used with high temperature hydraulic systems.

Teflon, or equivalent flexible hose assemblies shall use 6061-T6 aluminum alloy or steel end fittings. Approved flareless type tube fittings may be used, except fittings below a -4 size shall not be used with stainless steel tubing. Approved brazed-in-place tube fittings may be used. Dynatube, or equivalent fittings may be used.

3.15.1.1.4 PACKING. - Teflon, or equivalent backup rings conforming to DWG MS28774 shall be used where required in hydraulic packing applications, except that special packings and backups shall be used in applications where "O" ring type packings are subject to spiral failures, and McDonnell Standard 7M46 shall be used for boss type applications.

3.15.1.1.5 SHUTOFF VALVES. - Shutoff valves need not be provided in the engine-driven hydraulic pump suction lines.

3.15.1.1.6 RESERVOIRS. - Airless type reservoirs pressurized from the hydraulic system shall be used.

3.15.1.1.7 AIR BOTTLE INSTALLATION. - Air bottles shall be supplied for normal and emergency operations as indicated in 3.15.2.2. Air bottles shall be rechargeable only when installed in the airplane. Recharging of the air bottles shall be done by ground equipment.

3.15.1.1.8 POWER CONTROL CYLINDERS. - The power control cylinders shall be provided with a pressure line filter either adjacent to the cylinder or built into the cylinder. Provision for disengaging the cylinder or actuator shall not be required.

3.15.1.1.9 HYDRAULIC GROUND SERVICING EQUIPMENT. - Hydraulic ground servicing equipment shall not be carried in the airplane.

3.15.1.1.10 GROUND TEST CONNECTIONS. - The ground test connections shall be in accordance with 3.7.10.1 of Spec MIL-H-5440B - 1, except that a 1-1/4 inch (-20) suction line connection may be provided in combination with the 3/4 inch (-12) pressure line.

3.15.1.1.11 CLAMPS. - Teflon, or equivalent cushion stainless steel clamps as approved by NAVAIRSYSCOM, shall be used.

3.15.1.2 SUMMARY OF ACTUATED ITEMS. - The following items shall be actuated hydraulically:

Rudder	Pneumatic air compressor
Ailerons	Nose wheel steering
Spoilers	Roll yaw interconnect
Landing Gear	Engine auxiliary airdoor
Horizontal Tail	Engine air duct bellmouth
Trailing edge flaps	Speed brakes
Leading edge slats	Wheel brakes
Wing sweep	Refueling probe
Arresting gear	Variable engine air duct ramp
Radar Antenna Dish	Emergency generator (engine restart)
Landing Gear Uplocks	Nose gear tow bar

3.15.1.3 HYDRAULIC FLUID. - The fluid used in the hydraulic systems shall be in accordance with Spec MIL-O-5606A-1. The weight of hydraulic fluid conforming to Spec MIL-O-5606A-1 shall be 7.0 lbs per gallon.

3.15.2 PNEUMATIC SYSTEM. - Applicable, except the ground charge connection attachment shall be located downstream of the airplane moisture removing equipment. Spec MIL-P-5518B shall apply in lieu of Spec MIL-P-5518A.

3.15.2.1 DESCRIPTION. - One pneumatic system of the ground charged type employing 3000 psi operation pressure shall be provided. A small air compressor shall be provided for system stabilization.

3.15.2.1.1 FITTINGS. - Approved straight threaded, flared tube fittings may be used with the following limitations:

(1) Male threaded aluminum alloy fittings below a -8 size shall not be used with stainless steel tubing.

(2) Female threaded aluminum alloy fittings above a -8 size shall not be used with pneumatic systems.

Teflon, or equivalent flexible hose assemblies shall use 6061-T6 aluminum alloy or steel sockets. Approved flareless type tube fittings may be used, except fittings below a -4 size shall not be used with stainless steel tubing. Approved brazed-in-place tube fittings may be used. Dynatube, or equivalent fittings may be used. The canopy emergency air bottle assembly shall be provided with a fitting assembly which has two standpipes (inlet and outlet).

3.15.2.1.2 PACKINGS. - Teflon, or equivalent backup rings conforming to DWG MS28774 shall be used where required in pneumatic packing applications, except that special packings and backups shall be used in applications where "O" ring type packings are subject to spiral failures, and McDonnell Standard 7M46 shall be used for boss type applications.

3.15.2.1.3 EMERGENCY BRAKE CONTROL SYSTEM. - Metered differential brake control shall not be required for the pneumatic emergency brake system.

3.15.2.2 SUMMARY OF ACTUATED ITEMS. - The following items shall be actuated or pressurized pneumatically:

Normal Operation	Emergency Operation
Nose gear catapult extension	Landing gear extension
Canopy	Trailing edge flap extension
Electronic Equipment pressurization	Leading edge slat extension
	Wheel brake application
	Canopy
	Cockpit flooding doors
	Radar equipment stowage (RIO)

3.16 ELECTRICAL.

3.16.1 DESCRIPTION. - Applicable, except that "R" drawings shall form a part of this specification to the extent specified herein. The AC power supply shall provide power in accordance with MIL-STD-704 and shall contain over-voltage protection, under-frequency protection, and feeder fault protection in accordance with MS90302.

3.16.2 ELECTRIC POWER SUPPLY. - Applicable, except that the characteristics of the electric power shall be 115/200 volt, 3-phase, 400 cycles, in accordance with MIL-STD-704. A prime electric power system consisting of two brushless 30 KVA generators, two control panels/regulators, conforming to the requirements of Spec MIL-G-21480 and DWG MS90302, two 100 AMP transformer rectifiers based on the requirements of MS17976-2 and a power control box shall be installed. The power supply system shall be driven by a government furnished contractor installed constant speed drive system conforming to the requirements of Spec MIL-T-7101A and in general meet the requirements of DWG MS90301. Normal electrical power, under a single engine operating condition, shall be provided. Emergency electric power shall be provided as specified in 3.16.2.4. Electrical system design techniques such as planned load distribution and avoidance, where possible, of intermixed power and phase sources within a given piece of equipment or system will be employed to minimize possible adverse weapon system operational characteristics resulting from the GFAE dual nonsynchronous power generating system. Redesign of electrical equipment due to possible degradation of the mission capabilities by installation of the split bus shall be the subject of separate contract negotiation. As a design objective the ratio of load distribution between the two generators shall no greater than two to one.

3.16.2.1 MAIN POWER. - Applicable

3.16.2.1.1 AC SYSTEMS. - The split bus system is a carryover from model F-4J. See 3.16.2.

3.16.2.1.2 GENERATOR DRIVES. - See 3.16.2.

3.16.2.1.3 DC SYSTEMS. - See 3.16.2.2.

3.16.2.1.4 BATTERIES. - A battery need not be provided.

3.16.2.2 CONVERSION POWER. - Two 100 AMP transformer-rectifiers, in accordance with MS17976-2, shall be installed for providing DC power. A minimum of 100 percent excess capacity based on the preliminary load analysis shall be available. Necessary emergency DC power, when both engines are in a flame-out condition, shall be provided as specified in 3.16.2.4.

3.16.2.3 MISSION COMPLETION POWER.- Applicable, if failure of one generator necessitates load monitoring. The emergency operating loads, as required by 3.16.2.4, shall be connected to the essential bus system.

3.16.2.4 EMERGENCY POWER.- An emergency electric power system shall be provided to supply power when both engines are in a flame-out condition. The emergency electrical power shall be supplied from an emergency AC generator. The emergency electrical power system shall supply sufficient AC and DC power, as required, for the following:

(a) Left-hand Boost Pump
(b) Engine Ignition
(c) Fuel System Indicators
(d) Fuel System Control
(e) Buddy Tank Hose Jettison
(f) Refuel Probe
(g) External Stores and Missile Jettison
(h) Center Stores Safety
(i) Nozzle Position Indicator
(j) Control Surfaces Position Indicators
(k) Rudder Feel Trim System
(l) Oil Pressure Indicators
(m) Engine Oil Level
(n) Turbine Out Temperature
(o) Hydraulic and Pneumatic Pressure Indicators
(p) Aft Cockpit Instrument Lights
(q) Forward Cockpit Instrument Lights
(r) Master Caution Light Reset
(s) Windshield Temperature
(t) Caution Lights
(u) Communication, Navigation, Identification
(v) Central Air Data Computer
(w) Heading and Attitude Reference Set

3.16.2.4.1 EMERGENCY POWER EQUIPMENT.- See 3.16.2.4.

3.16.2.4.2 TRANSFER OF EMERGENCY ELECTRIC POWER.- See 3.16.3.

3.16.3 ESSENTIAL BUS SYSTEM.- An emergency bus shall be provided to which are connected all loads essential for maintaining flight under night instrument conditions. The installation of the essential bus system shall provide maximum reliability and least vulnerability to electrical, mechanical, and combat damage. If failure of one generator necessitates load monitoring the emergency operating loads, as required by 3.16.2.4, shall be connected to the essential bus system.

3.16.4 POWER UTILIZATION. - Applicable as specified in 3.16.2. Compatible power sources will need to be selected to provide electronic compatibility for the split bus configuration.

3.16.5 WIRING. - Electrical wiring shall meet the requirements of Spec MIL-W-5088A, except as specified herein. Compact wire bundles may use Type E wire based on the requirements of Spec MIL-W-16878C and/or MS21985, Rev. B wire based on the requirements of Spec MIL-W-22759A-1B. Miniature compact wire bundles may use wire with Kapton Polyimide film, or equivalent, type insulation subject to approval of NAVAIRSYSCOM. The miniature compact wire bundle may also use 24 and 26 gauge high strength conductors with Kapton Polyimide film, or equivalent, type insulation subject of approval of NAVAIRSYSCOM. In addition any combination of wire conforming to Spec MIL-W-16878C, Type E, and/or Spec MIL-W-22759A-1B, MS21985, Rev. B, and Kapton Polyimide film, or equivalent, type insulated wire may be used in either compact or miniature compact wire bundles contingent on approval of NAVAIRSYSCOM. Compact wire bundles shall be based on the requirements of McDonnell Process Specifications as approved by NAVPLANTREPO. Wire based on the requirements of Spec MIL-C-25038-1 and/or Spec MIL-W-25038B shall be used in areas of extreme temperature. In areas other than very high temperature and where compact wire bundles are not used Spec MIL-W-7139A and/or MIL-W-22759A-1B shall be used. Hook-up wire conforming to the requirements of Spec MIL-W-16878C, Type E and/or Spec MIL-W-22759A-1B, MS21985, Rev. B and/or Kapton Polyimide film, or equivalent, type insulation subject to approval by NAVAIRSYSCOM shall be used in console panels, circuit breaker panels, relay panels, and junction boxes. Identification of wires and cables within three inches of each junction (except permanent splices) and at each terminating point so that shielding, ties, clamps, or supporting devices do not have to be removed in order to read the identification shall be a design objective. Identification of the hook-up wires within the panels may be by a single numerical designation plus the wire gauge number in lieu of a complete alphanumerical designation. Permanent splices may be used at the discretion of the contractor during flight test and development programs.

3.16.5.1 SOLDERING AND CONNECTORS. - The use of connectors shall meet the requirements of Spec MIL-W-5088A, except as otherwise specified herein. Use of the following connectors shall be permitted:

(a) Miniature connectors conforming to the requirements of Spec MIL-C-26482, except that Nu-Line connectors or connectors based on the requirements of Spec MIL-C-25516A shall be used for fuel gauging and oxygen gauging systems.

(b) Connectors conforming to the requirements of MS25183 and/or 54A3A225A or equivalent in lieu of Standard AN3106 series connectors whenever the connector is potted.

(c) Mechanical locking connectors. These connectors shall not require safety wiring.

(d) Bendix (Junior Tri-Lock) "JT," or equivalent, connectors may be used with miniature compact wire bundles subject to specific approval of NAVAIRSYSCOM.

3.16.5.1 (Continued)

Connectors listed herein may have either solder or crimp type wire connections. Potted pressure sealing bushings conforming to the requirements of McDonnell DWG 5M13 may be used in lieu of AN connectors for entry of wire bundles into pressurized areas. Spare pins in potted connectors shall have pigtail wires conforming to the requirements of Spec MIL-W-7139A in lieu of Spec MIL-W-5086 and shall be in ratios specified in 3.1.5.3(b) of Spec MIL-E-5400. Soldering shall conform to the requirements of Spec MIL-S-6872 and McDonnell Process Spec 22800. Crimp type connections for wire splices and connectors shall be permitted and shall meet the requirements of McDonnell Process Specs 17150 and 17130.

3.16.6 EQUIPMENT INSTALLATION. - Applicable, except that Spec MIL-E-7080-1 shall apply. Voltage regulators need not be accessible in flight and that the external power receptacle access door shall not be required to be spring loaded closed. The requirement in 3.4.1.2, of Spec MIL-E-7080-1, for identification of the exterior light switch located in the L.H. power quadrant level shall not be required. Additional space for spare switches on the left and right hand console panels as specified in 3.4.1.4, of Spec MIL-E-7080-1, shall not be required.

3.16.7 CONTROL PANELS. - Aircraft equipment consoles provided by the contractor shall meet the requirements of Spec MIL-C-6781 and the console controls shall be installed based on the requirements of Spec MS25213.

3.16.8 LIGHTING.

3.16.8.1 EXTERIOR LIGHTING. - Applicable. Exterior lighting shall in general meet the requirements of DWG's R-203-H and R-204-Q. Auxiliary wing tip join-up lights, located on the trailing edge of the wing tips, and a red anticollision light, located on leading edge of the tail fin shall be provided. Flashing capabilities for the fuselage, anticollision and tail lights only shall be provided. The fuselage lights, tail light, wing position and wing tip join-up lights shall incorporate 6 volt ruggedized lamps with 28/6 volt transformers. Provision shall be made for the installation of a GFAE, 250 watt, 28 volt taxi light on the nose gear strut. The installation provisions for the taxi light (PAR 36 lamp) shall include the light bracket, backup structure, provision for reticle adjustment, and wiring provisions. A taxi light switch shall be provided on the exterior light control panel and marked "TAXI LT." The GFAE portion of the taxi light shall not be included in the aircraft weight.

3.16.8.1.1 SEARCHLIGHTS. - Not required.

3.16.8.1.2 APPROACH LIGHT. - An angle of attack indicator type approach light, located on the nose gear door, shall be provided. The approach light control shall in general meet the requirements of 3.14.1.9, and DWG R-204-Q. Approach light dimming shall be provided when the exterior lights master switch is in the ON position. A lamp test switch shall be provided.

3.16.8.2 INTERIOR LIGHTING. - Interior lighting shall meet the requirements of Spec SR-127-b-2 and as approved for the F-4J airplane. Interior lighting circuits shall be provided based on the requirements of DWG R-209-F except that a two-circuit interior light system with separate controls for the floodlights shall be provided. Background console lights shall not be energized until the individual panel and unit lights have come on. All lighting shall be powered from the AC system. A spare lamp storage compartment shall be provided in each cockpit, (See 3.19.2.8). Two white thunderstorm lights conforming to Grimes A-4950A-24 or equivalent shall be provided in the pilot's cockpit only. Dimming provisions for the lights in the radar intercept officer compartment shall be as approved for the model F-4J airplane.

3.16.8.2.1 PARATROOP ALARM SIGNALS. - Not applicable.

3.16.9 IGNITION AND STARTING CONTROL SYSTEM.

3.16.9.1 RECIPROCATING ENGINE AIRPLANES. - Not applicable.

3.16.9.2 TURBOENGINE AIRPLANES. - The ignition and starting system shall be as specified in 3.12.2.3, 3.12.11.1, and 3.12.12.1.

3.16.10 RECEPTACLES. - Applicable, except that Spec MIL-E-7080-1 shall apply. A DC external power receptacle shall not be provided. One AN3114 3-phase AC external power receptacle shall be provided based on the requirements of DWG AND10462. A utility receptacle shall be provided for the pilot only. A receptacle outlet for 115/200-volt, 3 phase, 400 cycle for test equipment shall be provided. Provision shall not be made for a pilot's heated flying suit. One test receptacle with necessary wiring shall be provided in the rear cockpit to facilitate the checking of the electrical generator control system. Reverse polarity and reverse phase protection shall not be provided.

3.16.11 INDICATORS. - (See 3.14.1).

3.16.12 BONDING. - Bonding shall in general meet the requirements of Spec MIL-B-5087A except that lightning protection need not be provided in the canopy.

3.16.13 SIGNAL SPOTLIGHT PROVISION. - Not applicable.

3.16.14 LANDING GEAR INDICATING SYSTEM. - A landing gear indicating system shall be provided based on the requirements of DWG R-707-K, except that throttle switches shall not be required.

3.16.15 STATIC GROUND. - Not required.

3.16.16 INSTRUMENT ELECTRIC SYSTEM. - Applicable. Instrument electrical system shall be subject to NAVAIRSYSCOM approval. Each instrument shall be individually connected to the power source by means of a suitable fuse or circuit breaker to isolate the instrument in event of a fault. Flight instrument system shall be so designed that no one electrical fault can result in the complete loss of attitude and direction indication. A suitable warning indication shall be provided to show loss of power to essential flight instruments.

3.16.17 RADIO INTERFERENCE. - Applicable, except Spec MIL-I-6181 shall not apply. Spec MIL-I-6181B shall apply to the design of electrical equipment to the extent required to meet the installation requirements of Spec MIL-I-6051.

3.16.17.1 FILTERS. - Radio noise filters shall be provided if necessary to insure compliance with Spec MIL-I-6051.

3.16.18 SYSTEM PROTECTION. - Applicable.

3.16.19 EQUIPMENT COOLING. - Applicable, except that the cooling airflow need not be unidirectional under all operating conditions. The cooling installation for blast cooled generators, if provided, shall meet the requirements of Spec MIL-C-8678. Cooling shall be provided as necessary to prevent electrical components from exceeding their maximum allowable temperatures during reverse flow conditions.

3.16.20 WARNING, CAUTION, AND ADVISORY LIGHTS. - Warning, caution, and advisory lights shall be provided in the forward cockpit and shall be grouped in one area. A master caution light, to indicate that one of the caution lights has been energized, shall be provided on the main instrument panel in the forward cockpit.

3.16.21 ARMAMENT ELECTRIC SYSTEM. - Necessary circuit and control provisions shall be provided to accommodate the requirements of 3.18.8. An interval generator and selector are not required. The missile control panel shall allow the pilot to fire one missile with each trigger depression.

3.17 ELECTRONICS.

3.17.1 DESCRIPTION. - The electronic equipment shall consist of the equipment listed in the following paragraphs.

3.17.2 INSTALLATION. - Applicable, except as specified in subparagraphs to this paragraph and MIL-STD-704 shall apply vice Spec MIL-E-7894.

3.17.2.1 GOVERNMENT FURNISHED ELECTRONIC EQUIPMENT. - The following electronic equipment shall be installed in accordance with the specification listed.

	Equipment	Specification
(1)	Communication, Navigation, Identification (CNI) Group UHF and AUX Control C-6684/ASQ AIMS Transponder Set AN/APX-72 Transponder Set Control C-6280(P)/APX ADF (AM-3624/ARA-50) Antenna (AS-909/ARA-48) Intercoms (Two) C-2645D/AIC-14A Indicator Frequency Channel (ID-1311/ASQ) Bird Type 5238 Filter Air-to-Air IFF AN/APX-76 Auxiliary Receiver AN/ARR-69 (See 3.17.2.2 for CFE portion.)	Installation: MIL-I-8700, MIL-W-5088A and MIL-I-6051 Testing: Specifications to be prepared by the contractor and approved by NAVAIRSYSCOM or NAVPLANTREPO
(2)	Digital Data Communication System (AN/ASW-27) (a) CV( )/ASW-27 Converter DDAD (b) C( )/ASW-27 Data Link Control (See 3.17.2.2.4, for complete system definition.)	Installation: Specs MIL-I-8700, MIL-W-5088A and MI MIL-I-6051 Testing: Specifications to be prepared by the contractor and approved by NAVAIRSYSCOM or NAVPLANTREPO
(3)	X-Band Beacon AN/APN-154 (a) RT-681/APN-154 X-Band Beacon (b) CU1104/APN-154 X-Band Duplexer (c) C4419/APN-154 Beacon Control (See 3.17.2.2 for CFE portion.)	Spec MIL-R-23431-1 Installation: Specs MIL-I-8700, MIL-W-5088A, and MIL-I-6051 Testing: Specifications to be prepared by the contractor and approved by NAVAIRSYSCOM or NAVPLANTREPO

3.17.2.1 (Continued)

	Equipment	Specification
(4)	Radar Altimeter Set (AN/APN-141(V)) (a) RT-601B/APN-141 (V) Receiver-Transmitter, Radar (b) ID-881A or B/APN-141 (V), Indicator, Height (c) SA-791A/APN-141 (V), Switching Unit, Radio Frequency (d) AS-1233/APN-141 (V), Antennas	Spec MIL-A-23887(WEP) Installation: Specs MIL-I-8700, MIL-W-5088A, and MIL-I-6051 Testing: Specifications to be prepared by the contractor and approved by NAVAIRSYSCOM or NAVPLANTREPO
(5)	Warning Receiver Set (a) R-( )/APR-27, Receiver (b) Self Test Unit	Installation: Specs MIL-I-8700, MIL-W-5088A, and MIL-I-6051 Testing: Specifications to be prepared by the contractor and approved by NAVAIRSYSCOM or NAVPLANTREPO

3.17.2.1.1 CRYPTO COMPUTER. - Space and limited electrical provisions shall be made for the installation of a government furnished government installed KIT-1A/TSEC Crypto Computer. The space provided shall be 8.0 inches high by 5.3 inches wide by 20.4 inches long (including handles, electrical connectors, and mount). Suitable ballast and ballast attachments shall be provided for use when the KIT-1A/TSEC Crypto Computer is not installed. This computer shall operate in conjunction with the following equipment:

(a) AN/APX-72 AIMS Transponder Set

(b) C-6280(P)/APX Transponder Set Control

3.17.2.1.2 CRYPTO INTERROGATOR. - Space and limited electrical provisions shall be made for the installation of a government furnished government installed KIR-1A/TSEC Crypto Interrogator. The space provided shall be 8.0 inches high by 5.0 inches wide by 10.0 inches long (including handles, electrical connectors, and mount). Suitable ballast and ballast attachments shall be provided for use when the KIR-1A/TSEC Crypto Interrogator is not installed. This Interrogator shall operate in conjunction with the following equipment:

(a) AN/APX-76 Air-to-Air IFF

(b) C-( )/APX Set Control

3.17.2.1.3 ELECTRONIC COUNTERMEASURES (ECM) PROVISIONS. - Space, power and cooling provisions shall be made for the future installation of electronic countermeasure capabilities.

3.17.2.2 CONTRACTOR FURNISHED ELECTRONIC EQUIPMENT.- The following electronic equipment shall be provided as specified below and in accordance with the requirements of 3.17.4.

3.17.2.2.1 INERTIAL NAVIGATION/DIGITAL BOMBING SYSTEM (INDBS).- An INDBS which provides the basic navigation, air-to-surface weaponry, an an attitude reference shall be provided. The system shall feature an improved alignment capability which eliminates the necessity of transporting peripheral instrumentation to the aircraft. The system shall be capable of being hand-carried and manually inserted in the aircraft while it is operating in the navigate mode. The system shall feature a navigation accuracy of one nautical mile per hour and it shall provide instantaneous aircraft present position latitude and longitude anywhere over the earth including the polar regions. The INDBS shall provide a continuous basic all-attitude reference to associated electronic equipment for indicator and stabilization purposes. The INDBS shall provide a digital bombing capability which employs the Lead Computing Optical Sight and the air-to-ground ranging mode of the AN/AWG-10 radar system. The INDBS provides the basic digital ballistics computation and provides for weapon release. The INDBS provides range and bearing to any one of eight selected destinations. A Built-In-Test (BIT) shall be incorporated into the INDBS and it shall provide a self-test indication in the aft cockpit as a GO or NO-GO condition. The entire BIT procedure shall be performed within the cockpit. The INDBS shall operate in conjunction with the following associated equipment.

(a) Heading and Attitude Reference Set
(b) Central Air Data Computer (CADC)
(c) Bearing-Distance-Heading Indicator
(d) Horizontal Situation Indicator
(e) Airborne Weapon Control System (AN/AWG-10(Mod))
(f) Data Link (AN/ASW-27)
(g) Lead Computing Optical Sight Set (AN/ASG-22(Mod))

3.17.2.2.2 LEAD COMPUTING OPTICAL SIGHT SET (LCOSS) (AN/ASG-22 (MOD)). - The LCOSS shall be provided. The LCOSS shall provide the pilot with steering information and information required to deliver gunfire (lead pursuit) or missiles (boresight) against aerial targets, and gunfire, rockets, or bombs against ground targets. The LCOSS output shall be in the form of a disturbed reticle pattern on an adjustable optical combining glass, which will enable the pilot to direct the aircraft on the course to successfully complete the fire control problem. A Built-In-Test (BIT) shall be incorporated into the LCOSS. The BIT shall be incorporated as GO or NO-GO checks. The LCOSS shall consist of the following:

(a) Optical Display Unit (SU-22/ASG-22(Mod))
(b) Lead Computing Gyroscope (CN-1043/ASG-22)
(c) Lead Computing Amplifier (AM-4224/ASG-22)(Mod)

The LCOSS shall operate in conjunction with the following associated equipment:

(1) Airborne Weapon Control System (AN/AWG-10 (Mod))
(2) Interial Navigation/Digital Bombing System (INDBS)
(3) Central Air Data Computer (CADC)

3.17.2.2.3 RADAR WARNING AND HOMING SET.- A Radar Warning and Homing set shall be provided. (To be defined at a later date.)

3.17.2.2.4 DIGITAL DATA COMMUNICATIONS SYSTEM (DDCS) (AN/ASW-27).- A DDCS shall be installed and/or provided for a two-way digital communications link for manual or automatic control of the aircraft in Single or Multitarget Vector, Traffic Control, Automatic Carrier Landing, and Precision Course Direction during the various mission phases. On receipt of a valid control message, the DDCS shall reply with an appropriate message which may contain interceptor or target status, such as heading, speed, altitude, fuel, weapons, range, bearing, tacan, and discretes. The DDCS shall function as an airborne terminal working in conjunction with the appropriate control facility as follows:

(a) During the Vector phase, the DDCS receives, checks, decodes, processes, and stores the valid control message transmitted by the control center; and encodes, checks, and transmits an appropriate reply. The received control messages, which contain target situation and interceptor command data are processed by the AN/AWG-10 computer. Individual target symbols are displayed indicating the targets course, speed, and altitude to achieve intercepts. Automatic control to guide the aircraft to achieve an intercept is available through the DDCS.

(b) During a traffic control phase, the DDCS shall receive command heading, speed, and altitude information for an optimum entry into the base traffic pattern.

(c) During an automatic carrier landing, the DDCS shall provide either manual or automatic steering information, relative to a predetermined glide slope, for an optimum approach and landing. The glide slope error is displayed continuously on the ADI cross pointers.

(d) During a precision course direction phase, the DDCS provides an automatic, precision, tactical bombing capability under a wide range of altitude, armament, and weather conditions. Heading and altitude command signals are coupled to the autopilot and bombing course error signals and are displayed on the ADI. An automatic bomb-release feature is provided. At the option of the pilot, a fully manual bombing run may be accomplished.

The DDCS shall consist of the following:

(a) Mach-Airspeed and Command Indicator
(b) Discrete Readout Indicator (Pilot)
(c) Discrete Readout Indicator (RIO)
(d) Ka-Band Beacon
(e) Radio Set and Control (AN/ARC-124)
(f) Data Link Control (C-( )/ASW-27) (GFAE)

3.17.2.2.4 (Continued)

(g) Digital-Digital/Analog Converter (CV-( )/ASW-27) (GFAE)
(h) X-Band Beacon (AN/APN-154) (GFAE)

Effective MAC Cum Ship No. 1 through 80, a Radar Display Coupler shall be provided to make the DDCS compatible with the Single Shot Radar AN/AWG-10 (Mod).

The DDCS shall operate in conjunction with the following associated equipment:

(1) Central Air Data Computer (CADC)
(2) Automatic Flight Control Group (AFCG)
(3) Communication Navigation Identification (CNI)
(4) Heading and Attitude Reference Set
(5) Flight Director Group
(6) Airborne Weapons Control System (AN/AWG-10 (Mod))
(7) Missile Control Panel
(8) Fuel System
(9) Oxygen System
(10) UHF Communication Antenna System

3.17.2.2.5 HEADING AND ATTITUDE REFERENCE SET.- The Heading and Attitude Reference Set shall have an all-attitude capability of providing a continuous basic attitude reference. The Heading and Attitude Reference Set shall consist of the following:

(a) Compass System Controller
(b) Electronic Control Amplifier
(c) Displacement Gyroscope

The Heading and Attitude Reference Set shall operate in conjunction with the following associated equipment:

(1) Inertial Navigation/Digital Bombing System
(2) Flight Control Group
(3) Flight Director Computer
(4) Communication Navigation Identification (CNI)
(5) Airborne Weapon Control System (AN/AWG-10 (Mod))
(6) Lead Computing Optical Sight Set (AN/ASG-22 (Mod))
(7) Compass Transmitter

3.17.2.2.6 COMMUNICATION NAVIGATION IDENTIFICATION (CNI).- The following CNI components shall be provided to complete the CNI system defined in 3.17.2.1:

(a) TACAN Receiver - Transmitter RT-697/ARN-74(V)
(b) TACAN Control C-3659/ARN-74(V)

3.17.2.2.7 UHF COMMUNICATION SET (AN/ARC-109 (MOD)).- A UHF radio receiver-transmitter, AN/ARC-109 (Mod) shall be provided for two-way amplitude modulated radiotelephone communication. The radio receiver-transmitter shall transmit or receive on any one of 3500 channels

3.17.2.2.7 (Continued)

in the frequency range of 225 to 399.95 MC/S. The transmitter shall supply a minimum of 30 watts power across the frequency band go permit line of sight communication at all operational altitudes. The radio set shall have two separate receivers, one main tunable receiver and one guard receiver, each featuring a carrier-to-noise ratio squelch system. The UHF Radio Set shall operate in conjunction with the following:

(a) UHF - ADF AN/ARA-50
(b) Integrated Control, UHF Communication
(c) Intercommunication System
(d) Frequency/Channel Indicator, ID-1311/ASQ

3.17.2.3 A switch shall be provided to automatically actuate the IFF system when either seat is used for emergency escape. Provisions shall be made to ground test the emergency IFF system and to prevent actuation if either seat is removed.

3.17.2.4 MASTER RADIO SWITCH.- A master radio switch shall not be provided. Standard coaxial cable and all plugs for connection to receptacles on electronic equipment shall be provided.

3.17.2.5 SHOCK MOUNTING.- Shock mounting of electronic equipment need not be provided. However, shock mounting provisions for the electronic equipment shall be provided subject to satisfactory performance in service.

3.17.3 PERFORMANCE.- Applicable in accordance with specifications listed in 3.17.2.1 and 3.17.2.2.

3.17.4 CONTRACTOR FURNISHED ELECTRONIC EQUIPMENT.- Contractor furnished electronic equipment (CFE) shall conform to Specifications MIL-E-5400 and MIL-T-5422C, except as modified by McDonnell Reports 3854, 3855, and 8186 as approved by NAVAIRSYSCOM. New items of electronic equipment shall conform to Specification MIL-E-5400E and McDonnell Report 8738 as approved by NAVAIRSYSCOM. Modified items of electronic equipment may conform to Specification MIL-E-5400E and McDonnell Report 8738. The choice of the above Military Specifications or McDonnell Reports shall be determined by the contractor based upon the status and modification of the equipment involved. The installation of contractor furnished electronic equipment shall be based on the requirements of Specifications MIL-I-8700, MIL-W-5088A, and MIL-I-6051.

3.17.4.1 IDENTIFICATION OF CONTRACTOR FURNISHED ELECTRONIC EQUIPMENT.- Applicable, except that Spec MIL-N-18307(AER) shall apply. Federal stock numbers and contract numbers need not be shown on the nameplates; however, space for a Federal stock number shall be provided for future use.

3.17.4.1 (Continued)

Serialization shall be by prefix letters and consecutive numbers regardless of prefix letters as assigned by NAVPLANTREPO. Serial numbers shall start over with each change in AN nomenclature.

3.17.5 CONTROL PANELS.- Control panels shall be as specified in 3.16.7. The controls shall be installed or provided as follows:

Pilot	Radar Intercept Officer
UHF-AUX/Communication Control (GFAE)	UHF-AUX/Communication Control (GFAE)
TACAN Control (CFE)	TACAN Control (CFE)
Intercommunication (AN/AIC-14A) (GFAE)	Intercommunication (AN/AIC-14A) (GFAE)
Engaging Controller (CFE)	Mission Control (GFAE)
Data Link Beacon Control (GFAE)	BIT Programmer and Equipment Control (GFAE)
Transponder Set Control (C-6280(P)/APX) (GFAE)	Radar Indicator Control (GFAE)
Compass System Controller (CFE)	Antenna Hand Control (GFAE)
	Radio Set Control (GFAE)
	Data Link Control (GFAE)
	Miscellaneous Data Link Control (CFE)
	INDBS Control (Display) (CFE)
	IFF Control (Air-to-Air) (GFAE)
	Direct Radar Camera Control (CFE)
	Computer Cursor Control (CFE)
	Computer Control (CFE)
	Radar Warning and Homing Control (Display) (CFE)

3.17.6 ANTENNAS.- Applicable, except that Spec MIL-A-7772B shall apply in lieu of Spec MIL-A-7772. Paragraph 3.2.2.5.1b of Spec MIL-A-7772B shall be considered as a design objective for all contractor furnished antennas. The following antenna equipment shall be provided or installed:

CFE

Radar warning and homing antennas
UHF communication antennas - dual upper and lower, manual switched
IFF antennas (combined with UHF communications antenna)
TACAN antennas - dual (upper and lower) with automatic antenna selection
X-band beacon antenna
K_a-band beacon antenna
Special Warning Receiver Antenna Diplexer
IFF Lobing Switch
UHF Coax Relay

3.17.6 (Continued)

GFAE

ADF antenna
Missile signal antennas
Fire control radar antenna system
AN/APN-141 radar altimeter antennas
Air-to-air IFF antenna

3.17.6.1 Two antenna systems shall be provided for UHF communication use. One antenna shall be located on the aircraft under surface for lower coverage; the second antenna shall be located on the upper surface for upper coverage. Spec MIL-A-7772B shall apply, except as noted in 3.17.6.

3.17.6.2 Contractor furnished antennas shall be of such design and shall be so installed as to provide satisfactory electrical characteristics and shall cause minimum adverse effect on the speed, range, and aerodynamic performance of the aircraft. Such factors as icing, precipitation static, lightning protection, breakage by personnel, and ease of maintenance shall also be given consideration in the choice and location of antennas.

3.17.6.2.1 The design and location of contractor furnished antennas shall be based on model patterns or acceptable flight performance data on contractor performed flight tests.

3.17.7 RADOMES.- Applicable, except that the fire control radome shall be in accordance with 3.18.8.4.

3.17.8 BONDING.- Applicable, except as specified in 3.16.12.

3.17.9 EQUIPMENT COOLING.- Applicable. An air cycle refrigeration system and a liquid cooling system shall be provided to cool airplane electronics. Cooling air shall be provided during flight to the inlet connection for the AN/AWG-10 (Mod) AWCS equipment located in the fuselage nose group, to the shelf mounted CNI equipment located in the equipment compartment aft of the nose wheel well, to the AN/AWG-10 (Mod) computer, DDCS, radar warning and homing components located in the inner wing equipment bays, and provisions for the ECM components to be located in the aft fuselage equipment bay. A cooling liquid supply shall be provided for the AN/AWG-10 (Mod) AWCS equipment located in the fuselage nose group. The temperature of the delivered air shall be controlled to approximately 85°F from sea level to 20,000 feet altitude. Above 20,000 feet altitude the delivered air shall be controlled to the dew point temperature or the refrigeration system discharge temperature, if this is higher than the dew point temperature.

3.17.9 (Continued)

(A) Radar Set - AN/APG-59 (Mod) - Cooling shall be provided as follows:

(1) Computer unit required inlet static pressure differential ($\delta\Delta p$) at .93 lbs/min flow rate shall be no more than 2.9 inch H_2O.

(2) The aircraft liquid cooling system shall be capable of dissipating a maximum heat load of 14920 watts.

(3) The aircraft shall not supply heat to facilitate the radar cold start requirement of Condition II(a). The aircraft shall supply coolant at the radar/airplane interface at the following minimum flow rate:

(a) With the coolant temperature at the return disconnect equal to -65°F, the airplane shall supply 1.0 gpm at 0 psi, 0.6 gpm at 57 psi, 0.3 gpm at 101 psi and 0 gpm at 145 psi.

(b) With the coolant temperature at the return disconnect equal to +15°F, the airplane shall supply 3.0 gpm at 0 psi, 3.0 gpm at 77 psi, 2.0 gpm at 95 psi, 1.0 gpm at 120 psi, and 0 gpm at 145 psi.

Pressurization air shall be provided and the maximum temperature shall be 250°F.

(B) DDCS - AN/ASW-27

(1) Radio Receiver Transmitter, RT-( )/ARC-124 - Cooling air shall be provided the same as that specified in NAVWEPS 16-30ARC88-2, Section I, Paragraph 1-26, Figure 1-5 and Figure 1-6 for the Radio Receiver Transmitter, RT-649/ARC-124.

(C) Communication Navigation Identification (CNI) - Cooling air shall be provided as follows:

(1) Receiver Transmitter RT-697/ARN-74(V)
(2) Air-to-Air IFF AN/APX-76

3.17.9 (Continued)

Inlet Air Temp. °F	Airflow Rate lb/min
100	1.000
80	0.507
60	0.345
40	0.263
20	0.214

Pressure loss through the boxes, corrected to sea level standard conditions, (50°F and 14.7 psia) shall not exceed the following specified values:

Flow Rate lb/min	Pressure Loss In H_2O
0.3	0.150
0.5	0.200
1.0	0.285
2.0	0.410

(D) Missile Control Group (OA-6822/AWG-10)

(1) Drive Tuner, 4 Channel (TG-75/APA-128)

Cooling air shall be provided according to MIL-R-24022, Figure 2 Page 66 and Figure 3 Page 67 for the drive tuner, 4 channel, TG-75/APA-128 unit.

See 3.20.1.2.2 for ground air conditioning. External power for ground or deck operation shall be provided through the external power receptacle.

3.17.10 RADIO INTERFERENCE.- Applicable, except that Spec MIL-I-6181B shall apply, but only to the extent necessary to meet the requirements of Spec MIL-I-6051.

3.17.11 PRECIPITATION STATIC CONTROL.- An antiprecipitation static system shall not be provided.

3.18 ARMAMENT.

3.18.1 DESCRIPTION.- Armament shall consist of nine armament stations, which shall provide four fuselage stations for Sparrow III missiles semisubmerged and ejection launched. A centerline station shall be provided with the capability to carry multiple conventional weapons, a gun pod, special weapons, or a fuel tank. Four wing pylons shall be provided. The inboard pylon stations shall have multiple conventional weapons, and fuel tank capability. The outboard pylon stations shall have multiple conventional weapons, special weapons, Sparrow III, and Sidewinder air-to-air missile capability. Armament shall consist of the stores specified in 3.18.5 and 3.18.6, suspension equipment specified in 3.18.6.3.1 and control systems specified in 3.18.8. Armament shall also consist of passive-defense installation and other armament items.

3.18.2 FIXED GUNS.- Not applicable.

3.18.3 ROCKETS.- Not applicable.

3.18.4 FLEXIBLE GUNS.- Not applicable.

3.18.5 STORES.- Applicable. The basic loading shall be four Sparrow missiles semisubmerged in the fuselage. All other stores and racks shall be carried as special loadings and not included in normal weight. The time required to load each store specified in 3.18.6.3 shall not exceed 15 minutes. Spec MIL-I-8671 shall be applicable. Flight limitations with stores aboard shall be in accordance with 3.4.1.1.11 (3.1.1.1).

3.18.5.1 HOISTING AND HANDLING.- Hoisting and handling provision for stores shall be in accordance with Spec MIL-I-8671. Two fittings shall be incorporated on the center fuselage for attachment of portable bomb hoists of the MK-8 type. Integral, fixed sway braces of the screw type adaptable for all stores shall be provided for the centerline fuselage station.

3.18.6 GUIDED MISSILE SYSTEMS.

3.18.6.1 SPARROW MISSILES.- Four Sparrow missiles (AIM-7D, AIM-7E, AIM-7F, or AIM-7F (Modified)) shall be installed in a semisubmerged installation in the fuselage (Stations 3, 4, 6 and 7). The semisubmerged missiles shall be launched from an ejector launching rack, furnished by the contractor. Provisions for attaching one Sparrow missile at each B.L. 152.4 shall be provided. Government furnished tuning drives for the Sparrow missiles at B.L. 152.4 shall be installed in the attaching pylons. Provisions shall be made for jettisoning of wing mounted Sparrow missiles. It shall not be possible to fire the forward Sparrow missiles with

3.18.6.1 (Continued)

MER rack installed on the centerline station. Provisions to allow the pilot to fire the aft missiles shall be provided. Forward Sparrow missiles, however, can be fired with a 600 gallon external fuel tank installed on the centerline.

3.18.6.2 SIDEWINDER MISSILES.- Provisions for carrying four Sidewinder AIM-9B or AIM-9D (IRAH) missiles at B.L. 152.4 (two each on Stations 1 and 9) with launchers specified in 3.18.6.3.1 shall be provided. Provisions shall be made in the cockpit for the pilot to control the nitrogen supply in the GFAE launcher.

3.18.6.3 EXTERNAL STORES.- Provisions shall be made for installation of external stores at four wing stations (Stations 1 and 9, B.L. 152.4 and 2 and 8, B.L. 91.2), and one fuselage centerline station (Station 5). Semisubmerged stores shall be as specified in 3.18.6.1. External fuel tank stores shall be as specified in 3.12.9.4. With the store loadings described herein it is possible to combine certain fuel and store loadings to exceed the aerodynamic cg limits. Suitable handbook and/or warning procedures shall be provided to avoid these loadings. Capabilities to carry the stores listed in Figure 8 shall be provided, except that the loading quantities shall be subject to the GFAE rack configurations and maximum gross weight limitations.

3.18.6.3.1 STORES SUSPENSION EQUIPMENT.- Stores suspension equipment shall be provided and/or installed in accordance with the following specifications, with airplane installations in accordance with McDonnell DWG * :

(1) The following equipment shall be CFE:

(a) Fuel Tank Pylon, McDonnell DWG *
(b) Outboard Armament Pylon, McDonnell DWG *
(c) Aero 7/A Launcher, McDonnell DWG 32094101
(d) Aero 27A Ejector Bomb Rack, McDonnell DWG 32-71002 and Spec MIL-A-8591C
(e) Sparrow Launcher, McDonnell DWG *

(2) The following equipment shall be required for a CFE multiple conventional weapons kit, which shall be shipped concurrently as loose equipment with each aircraft: One centerline weapons adapter, two inboard weapons adapters, one set MK-4(20MM) gun pod attaching hardware, and wire bundles for all five stations.

(3) The following equipment shall be GFAE:

(a) LAU-7/A Guided Missile Launcher - MIL-L-22620
(b) Power Supply PP-2581/A - MIL-P-22621
(c) MAU-9A/A Ejector Rack
(d) MER-7 Multiple Ejector Rack (which shall be required to complete CFE Multiple conventional weapons kit (3.18.6.3.1(2))).
(e) TER-7 Triple Ejector Rack (which shall be required to complete CFE Multiple conventional weapons kit (3.18.6.3.1(2))).

3.18.6.3.1 (Continued)

External fuel tank attachment provisions for wing Stations 2 and 8 shall be as specified in 3.12.9.4. The rack for the center fuselage Station 5 shall be in accordance with the applicable specifications, except that design load requirements shall be compatible with the strength requirements of 3.4.1.1 with special weapons aboard. Special weapons airplane wiring provisions shall be in accordance with Sandia DWG 131398A. The outboard wing pylons shall have attach points that will accommodate separate GFAE rail launchers (LAU-7/A) in accordance with Douglas DWG SK456480 for Sidewinder missiles. This GFAE launcher shall be provided with nitrogen for cooling the Sidewinder AIM-9D sensitive cell. Suspension equipment required to carry droppable stores shall be as noted on Figure 9.

3.18.6.3.2 EXTERNAL STORE CONFIGURATION.- The compatibility between the airplane and the external stores specified in 3.18.6.3 shall be based upon the configurations established by the following drawings and subject to feasibility demonstration in flight:

(1) MK-28 Mod 1 (EX) Special Weapon, Sandia DWG 149328B
(2) MK-28 Mod 0 Special Weapon Sandia DWG 149326B
(3) MK-43 Mod 0 Special Weapon Sandia DWG 143404(E)
(4) MK-43 Mod 1 Special Weapon Sandia DWG 142376(G)
(5) MK-57 Mod 0 Special Weapon Sandia DWG CD10016(6)
(6) Aero 8A Practice Bomb Dispenser RAC DWG 56A90J1-3
(7) A/A-37B-3 Practice Multiple Bomb Rack
(8) Sparrow (AIM-7D) Guided Missile RMC DWG HJ7151501 (Rev. II)
(9) Sparrow (AIM-7E) Guided Missile RMC DWG JEQ001N-8001(B)
(10) Sparrow (AIM-7F) Guided Missile RMC DWG J259739
(11) Sparrow (AIM-7F) (Modified) Guided Missile RMC DWG J259739
(12) Sidewinder (AIM-9B) Guided Missile NAVORD DWG SK444176(B4)
(13) Sidewinder (AIM-9D) Guided Missile NAVORD DWG SK464992(G)
(14) MK-81 Low Drag Bomb, BUWEPS 1366065
(15) MK-82 Low Drag Bomb, BUWEPS 1380544
(16) MK-83 Low Drag Bomb, BUWEPS 1380262
(17) LAU-3/A, BUORD DWG 54A46R1
(18) LAU-10/A BUORD DWG 55A27J1
(19) 600 Gallon Wing Tank DWG *
(20) 600 Gallon Centerline Tank DWG *
(21) MK-4 Gun Pod (20 mm) DWG *
(22) D-704 Refueling Store Douglas DWG 5547000-523
(23) CP-5 Starter Pod Specs MIL-P-8686 and MIL-U-19728A

3.18.6.3.3 OPERATIONAL CAPABILITY.- Any operational limitations associated with the firing of individual weapons from such stores as rocket packages, dispensers, or gun pods shall be established during the flight development program as specified in the Addendum 48 to MIL-D-8708A. Any airplane changes necessary to minimize such limitations shall be the subject of separate negotiations. The use of the GFAE MAU-9A/A Ejector Rack does not necessarily obligate the Contractor to provide operating limits in excess of the capabilities of the rack.

STORES DROPPABLE

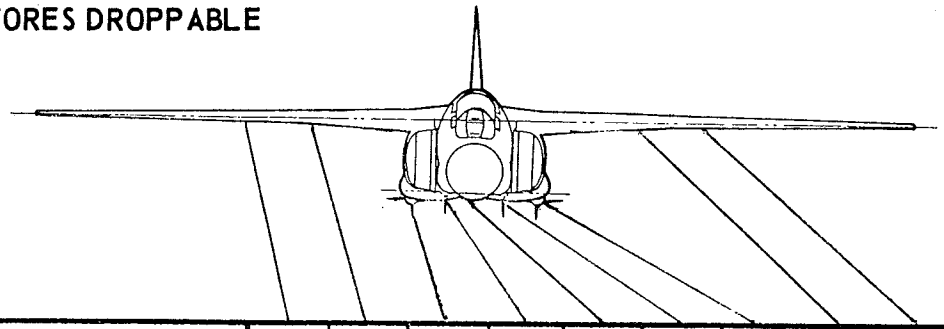

STORE	9	8	7	6	5	4	3	2	1
	BL 152.4	BL 91.2			℄			BL 91.2	BL 152.4
MK4 GUN POD					1				
MK81 LOW DRAG BOMB	3 (6*)	6			6			6	3 (6*)
MK82 LOW DRAG BOMB	3 (6*)	6			6			6	3 (6*)
MK83 LOW DRAG BOMB	1 (3*)	3			3			3	1 (3*)
LAU-3A/A	3	3			3			3	3
LAU 10A	3	3			3			3	3
SIDEWINDER AIM-9B/D	2								2
SPARROW III AIM-7D/E/F/F (MOD.)	1		1	1		1	1		1
MK28 MOD 0					1				
MK28 MOD 1(EX)					1				
MK43 MOD 0&1					1				
MK 57 MOD 0	1				1				1
A/A-37B-3 PRACTICE MULTIPLE BOMB RACK	1				1				1
CP-5 STARTER POD					1				
D704 REFUELING STORE					1				
600 GAL. TANK		1			1			1	

Note: This chart is intended to show physical compatibility for each listed store at that station. It does not imply that the maximum loading shown is possible. Any given combination of weights and stores requires compatibility within weight and balance limits of the airplane. Final compatibilities must be verified through flight tests.

*Alternate loadings using MER instead of TER at stations 1 and 9, resulting in catapult gross weights up to 72,475 pounds with increased wind over deck up to 17 knots with C-13, 29 knots with C-7 catapults.

Figure 8

STORES SUSPENSION EQUIPMENT

Stores	Equipment	Station Location and Quantity				
		Sta. 1	Sta. 2	Sta. 5	Sta. 8	Sta. 9
Sidewinder AIM-9B/D	LAU-7A Launcher	2				2
	Outboard Armament Pylon	1				1
Sparrow AIM-7D/E/F/F (Mod.)	Outboard Armament Pylon	1				1
	MAU-9A/A Bomb Rack	1				1
	Sparrow Launcher	1				1
	AERO-7A Guided Missile Launcher*					
Special Weapons MK-28 Mod. 1-(EX), MK-43 Mod. 1 & 0 MK-57 Mod. 0, MK-28 Mod. 0	MAU-9A/A Bomb Rack (Note)	1				1
	Outboard Armament Pylon (Note)	1				1
	AERO-27A Ejector Bomb Rack			1		
Conventional Weapons MK-81; MK-82; MK-83; LAU-3A/A; LAU-10A	Multiple Ejector Rack**		1	1	1	
	Triple Ejector Rack**	1				1
	MAU-9A/A Bomb Rack	1				1
	Outboard Armament Pylon	1				1
	Fuel Tank Pylon		1		1	
	AERO-27A Ejector Bomb Rack			1		
	Multiple Weapons Adapter		1	1	1	
MK-4 Gun Pod (20mm)	AERO-27A Ejector Bomb Rack			1		
	Multiple Weapons Adapter			1		
A/A-37B-3 Practice Multiple Bomb Rack	AERO-27A Ejector Bomb Rack			1		
	MAU-9A/A Bomb Rack	1				1
	Outboard Armament Pylon	1				1
600 Gallon Fuel Tank	Fuel Tank Pylon		1		1	
	AERO-27A Bomb Rack			1		
D704 Refueling Pod	AERO-27A Bomb Rack			1		
CP-5 Starter Pod	AERO-27A Bomb Rack			1		

*One each at fuselage station 3, 4, 6, and 7
**See 3.18.6.3

Note – For MK57 Mod. 0 only.

Figure 9

3.18.6.3.4 MK-4 20 MM GUN POD. Provisions shall be made for the installation of a government furnished, government installed MK-4 gun pod. Provisions shall be at the fuselage centerline station (Station 5). An on-off selector and a clearing switch shall be provided on a panel in the pilot's cockpit. The control for the firing of the gun shall be by means of a trigger switch on the control stick in the pilot's cockpit. The gun pod shall be jettisonable. Jettison circuitry and in-flight release shall be as specified in 3.18.8.

3.18.7 KD TARGET SYSTEMS.- Not required.

3.18.7.1 LAUNCHING.- Not required.

3.18.8 ARMAMENT CONTROL SYSTEM.- The armament control system shall be provided and/or installed in accordance with Spec MIL-I-8677, except as specified herein and shall consist of the following:

(a) Special Weapon Control
(b) Conventional Weapon Control
(c) AN/AWG-10 (modified) Airborne Weapon Control System (AWCS)
(d) AN/AWW-2A Fuze Function Control Set

Release or ejection of all weapons shall be initiated by an electrical system. A monitor control panel, DCU-94/A or equivalent, shall be as installed in the pilot's cockpit to arm special weapons. A special weapons jettison switch shall be provided to control emergency release provided the appropriate lock release function has been selected on the DCU-94/A or equivalent monitor control panel. A separate wiring system from pylons to power source shall be provided for emergency jettison of all external stores.

Emergency jettison circuitry shall be routed through an interlock to prevent inadvertent ground jettisoning of weapons. An in-flight manual release shall not be required. A rotary switch located in the forward cockpit shall provide for selection and energizing of the weapon stations from which conventional weapons are to be launched. Another rotary switch, located in the forward cockpit, shall provide for selection of the type of weapon to be fired and shall also provide for energizing of the electrical and/or electronic circuits peculiar to the weapon type selected. This switch shall also provide three modes of delivery for conventional bombs (single, pairs or ripple).

3.18.8.1 SPECIAL WEAPON CONTROL.- The Inertial Navigation/Bomb Digital Computer (CFE) and DCU-94/A (GFAE), or equivalent, shall be for special weapons control and delivery. Operational control of the system shall be by the pilot, except that the pull-up timer shall be operated by the radar intercept officer. A radiating aural tone shall be

3.18.8.1 (Continued)

provided to monitor pilot's technique and equipment operation during LABS profile by defining the pull-up, programmed "G's," time of fall, and airplane retirement escape distance. This tone shall be provided at the instant of pull-up until the store is released. The tone shall be controlled by a "ground" signal from the INDBS computer through the UHF communication stations. Four test connectors to check the ID-1144/AJB-7 (Mod) Attitude Director Indicator cross pointer meter functions shall be provided. Selection shall be provided by a control panel located in the pilot's cockpit for the following modes of special weapon delivery:

(1) Loft bomb release
(2) Timed over-the-shoulder bomb release
(3) Instantaneous over-the-shoulder release
(4) Direct

3.18.8.2 CONVENTIONAL WEAPONS CONTROL.- Conventional weapons controls located in the pilot's cockpit shall consist of a rotary weapon selector switch, a rotary station selector switch for selecting centerline, inboard wing stations, outboard wing stations or all stations, a switch for nose and tail arming of bombs, and a interval selection switch for ripple interval selection. An option shall be provided on the weapon selector switch to permit bombs to be fired singly, in pairs or ripple. A rotary switch shall be provided to select the modes of delivery.

A separate switch shall be provided to allow the MK-4 gun to be fired simultaneously with a stores release. For emergency release of the MK-4 gun pod see 3.18.8.

3.18.8.3 WEAPON CONTROL SYSTEM.

3.18.8.3.1 MISSILE CONTROL SYSTEM (MCS) (Single-shot) AN/AWG-10 (Mod).- Effective MAC Cum Ship No. 1 through 80. An AN/AWG-10 (Mod) shall be installed. Complete provisions for the AN/AWG-10 (Mod) (Multishot) system defined in 3.18.8.3.2 shall be included in the space envelopes allocated for the AN/AWG-10 (Mod) (Single-shot) system except that the weight shall not be included in weight empty. The MCS shall provide information to only one Sparrow missile in flight at any one time. The MCS shall provide a coherent pulse-doppler mode as well as a pulse mode. The MCS shall provide launch zone computation, guidance, and control of Sparrow (AIM-7D/E/F/F(Mod)) missiles; launch zone computation of Sidewinder (AIM-9B/D) missiles. The MCS shall provide lookdown and co-altitude air-to-air capability to detect and track airborne targets. The MCS shall provide air-to-ground capability for ground mapping, terrain clearance, and air-to-ground ranging. Resistance to electronic and passive countermeasures shall be provided. The MCS shall consist of:

(a) AN/APG-59 (Mod) Radar Set - Based on the design requirements of Spec MIL-R-81114 (Mod) reviewed by McDonnell and as changed, corrected, and agreed to by McDonnell and the procuring activity.

3.18.8.3.1 (Continued)

(b) OA-6822/AWG-10 Missile Control Group - Based on the design requirements of Spec MIL-M-81208 (WP).

3.18.8.3.1.1 COMPONENTS.

3.18.8.3.1.1.1 RADAR.- The radar portion of the AN/AWG-10 (Mod) MCS shall be the AN/APG-59 (Mod) Radar Set and shall consist of an Antenna and Antenna Control Group, Radar Set Group, Stalo, Receiver, Synchronizer, Desicant Dehydrator, Control Unit, Electrical Equipment Racks, Unregulated Power Supply, Pilot's Indicator (Mod), RIO's Indicator, Indicator Control, Radar Set Control, Antenna Control, BIT Programmer, Clutter Computer, and Analog Fire Control Computer 1 and 2. Controls for the pilot's indicator shall be provided on the Optical Display Unit, which is a part of AN/ASG-22 (Mod). The peak output power for search, navigation, and missile control shall be 2 KW pulse and 200 watts CW RF power. The radar indicator's presentation for the RIO and pilot shall provide search and attack displays. The aft radarscope mounting shall be designed to provide stowage, and automatic retraction to stowed position for rear seat ejection. The radar control panel and antenna hand control shall be designed for automatic stowage during the ejection sequence to provide adequate ejection clearance.

3.18.8.3.1.1.2 RADAR ANTENNA.- A radar antenna system shall be installed. The antenna shall be hydraulically driven by the aircraft hydraulic system conforming to the requirements of 3.15.1 and shall be compatible with the AN/APX-76 IFF antenna requirements.

3.18.8.3.1.1.3 MISSILE CONTROL GROUP OA-6822/AWG-10.- The Missile Control Group shall consist of the following:

(a) Drive, Tuning TG-75/APA-128
(b) Drive, Tuning (2 used) TG-76/APA-128
(c) Rack, Electrical Equipment (2) MT-2249/APA-128
(d) Microwave Distribution Group consisting of:

Pseudo Modulation Tee
Directional Coupler
Directional Couplers (2 used)
Directional Couplers (3 used)
Coaxial Splitting Tees (5 used)
Pseudo and Rear Signal Horns (11 used)

3.18.8.3.2 AIRBORNE WEAPON CONTROL SYSTEM (AWCS) (Multishot) AN/AWG-10 (Mod).- Effective MAC Cum Ship No. 81 and subsequent. An AN/AWG-10 (Mod) shall be installed. The AWCS shall provide a coherent pulse-doppler mode as well as a pulse mode. The AWCS shall provide launch zone computation, and guidance information for Sparrow (AIM-7D/E/F/F(Mod)) missiles (one in flight at any one time); or launch zone computation and time shared guidance information for Sparrow (AIM-7F(Mod)) missiles (more than one in flight at any one time); or launch zone computation for

3.18.8.3.2 (Continued)

Sidewinder (AIM-9B/D) missiles. The AWCS shall provide lookdown and co-altitude air-to-air capability to detect and track from one to six airborne targets simultaneously. The AWCS shall provide air-to-ground capability for ground mapping, terrain clearance, and air-to-ground ranging. Resistance to electronic and passive countermeasures shall be provided. The AWCS shall consist of:

(a) AN/APG-59 (Mod) Radar Set - Based on the design requirements of Spec MIL-R-81114 (Mod) reviewed by McDonnell and as changed, corrected, and agreed to by McDonnell and the procuring activity.

(b) OA-6822/AWG-10 Missile Control Group - Based on the design requirements of Spec MIL-M-81208 (WP).

3.18.8.3.2.1 COMPONENTS.

3.18.8.3.2.1.1 RADAR.- The radar portion of the AN/AWG-10 (Mod) AWCS shall be the AN/APG-59 (Mod) Radar Set and shall consist of an Antenna and Antenna Control Group, Radar Set Group, Stalo, Receiver, Synchronizer, Desicant Dehydrator, Control Unit, Electrical Equipment Racks, Unregulated Power Supply, Pilot's Indicator (Mod), Indicator Control, Radar Set Control, Antenna Control, BIT Programmer and Equipment Control, Tactical Situation Display Indicator, Interface, Digital Generator No. 1, Digital Generator No. 2, Mission Control, Range Rate-Azimuth Indicator, and Indicator Auxiliary Package. Controls for the pilot's indicator shall be provided on the Optical Display Unit, which is a part of AN/ASG-22 (Mod). The peak output power for search, navigation, and missile control shall be 2 KW pulse and 500 watts CW RF power. The radar indicator's presentation for the RIO and pilot shall provide search and attack displays. The aft TSDI radarscope mounting shall be designed to provide stowage, and automatic retraction to stowed position for rear seat ejection. The radar mission control panel and antenna hand control shall be designed for automatic stowage during the ejection sequence to provide adequate ejection clearance.

3.18.8.3.2.1.2 RADAR ANTENNA.- A radar antenna system, roll, pitch, and yaw gimballed, shall be installed. The antenna shall be hydraulically driven by the aircraft hydraulic system in accordance with 3.15.1 and shall be compatible with the AN/APX-76 IFF antenna requirements.

3.18.8.3.2.1.3 MISSILE CONTROL GROUP OA-6822/AWG-10.- The Missile Control Group shall consist of the following:

(a) Drive, Tuning TG-75/APA-128
(b) Drive, Tuning (2 used) TG-76/APA 128
(c) Rack, Electrical Equipment (2) MT-2249/APA-128

3.18.8.3.2.1.3 (Continued)

(d) Microwave Distribution Group consisting of:

Pseudo Modulation Tee
Directional Coupler
Directional Couplers (2 used)
Directional Couplers (3 used)
Coaxial Splitting Tees (5 used)
Pseudo and Rear Signal Horns (11 used)

3.18.8.4 RADOME.- A radome for the radar shall be provided having the following transmission characteristics:

(1) The average one-way transmission through the radome from the AI antenna radiating in the Pulse Doppler frequency band shall be not less than * percent and minimum one-way transmission through the radome at any antenna scan angle shall be not less than * percent commensurate with the minimum beam deflection design of the radome.

(2) The average one-way transmission through the radome from the AI antenna radiating in the CW frequency band shall be not less than * percent and minimum one-way transmission through the radome at any antenna scan angle shall be not less than * percent commensurate with the minimum beam deflection design of the radome.

(3) The average one-way transmission through the radome from the TI antenna radiating in the CW frequency band shall be not less than * percent and the minimum one-way transmission through the radome at any antenna scan angle shall be not less than * percent commensurate with the minimum beam deflection design of the radome.

The radome shall be hinged to permit access to the radar compartment. The radome shall allow transmission and reception of AN/APX-76 frequencies.

3.18.8.5 BORESIGHTING.- The weapons system shall be so configured that the following items are either permanently oriented, or are capable, through appropriate adjustment, of being properly oriented, relative to an airplane reference line (water line and buttock line) established by accurately located index points in the nose wheel well:

(a) The radar antenna mounting plane shall be permanently established perpendicular to a line within $\pm 1/2^{\circ}$ of a line 2° nose down from the airplane reference line.

3.18.8.5 (Continued)

This assumes that the GFAE radar shall have enough electrical adjustment to compensate for the ±1/2° and any other tolerance in the radar set.

(b) The mounting structure for the angle of attack probe and the configuration of the probe shall provide for permanent alignment of the probe electrical C_L within ±2.4 mils of a line 15° nose down from the airplane reference line.

(c) Mounting provisions for the LAU-7A sidewinder launchers shall permit alignment to within ±1°(±17.5 mils) of a line 2° nose down from the airplane reference line.

(d) Mounting structure for the AN/ASG-22 optical sight shall be such that the sight can be boresighted to within ±1 mil of a line 0° nose down from the airplane reference line.

(e) The portable Inertial Navigation System shall be inserted in an adjustable mounting structure which is accurate to within 1/4° of the airplane reference line. The portable Inertial Navigation System axes shall be accurate within 15 arc-minutes of the mounting structure reference line. (This tolerance includes mechanical mating uncertainties of the portable unit to the mounting structure).

(f) Mounting of ASG-22 Gyro shall permit azimuth alignment parallel to within ±1/2° boresight index line, and pitch alignment 2° ±1/2° nose down to boresight index line and 90° ±1/4° to vertical sweep of boresight index line.

Bombs and rockets at Stations 1, 2, 8 and 9 are carried parallel to a B.L. at a 1° nose down angle. Rockets on the centerline Station 5 are also carried at a 1° nose down angle. Conventional bombs carried at the centerline Station 5 are carried at a 2-1/2° nose down angle.

3.18.9 PASSIVE DEFENSE.- Passive defense installations in accordance with Spec MIL-I-8675 shall be provided to the extent specified herein. The passive defense shall be as approved for the F-4J. Armor plate shall not be required. Forward-above protection for the pilot shall be equivalent to that provided by 1-1/4 inches of bullet-resistant glass mounted normal to the projectile path (See 3.7.1.3.1.2). Flak curtains shall not be required. The crew shall be provided with protection as follows:

Forward-below the windshield - protection equivalent to that provided by 3/8 inch face-hardened steel plate.

3.18.9 (Continued)

Aft (head) - not required.

Aft (shoulders) - protection equivalent to that provided by 3/8 inch face-hardened steel plate.

Aft (back) - protection equivalent to that provided by 1/2 inch 2024-T4 aluminum alloy.

3.18.10 PYROTECHNICS.- Not required.

3.18.11 SONOBUOYS.- Not required.

3.18.12 CARTRIDGE ACTUATED DEVICES.- Cartridge and cartridge actuated devices shall be as specified on applicable drawings.

3.19 FURNISHINGS AND EQUIPMENT.

3.19.1 ACCOMMODATIONS FOR PERSONNEL.- Accommodations for personnel shall consist of:

Eject Light
Oxygen Provision
Ejection Seats
Integrated Harnesses
Pressure Suit Provision
Antiblackout Suit Provision
Headrests
Composite Disconnect

3.19.1.1 SEATS.- Applicable.

3.19.1.1.1 PILOT'S SEATS (NONEJECTABLE).- Not applicable.

3.19.1.1.2 CREW SEATS (NONEJECTABLE).- Not applicable.

3.19.1.1.3 PILOT'S AND RADAR INTERCEPT OFFICER'S SEAT.- See 3.7.1.8.2.

3.19.1.1.3.1 EJECT LIGHT.- See 3.7.1.8.2.1.

3.19.1.1.3.2 COMPOSITE DISCONNECT.- A composite disconnect has been provided as GFAE with the seat survival kit of 3.7.1.8.2. Personal hoses for the full pressure suit and nonpressure suit when not delivered with the airplane, shall be added to the inventory logbook items or other approved disposition.

3.19.1.1.4 thru 3.19.1.2 Not applicable.

3.19.1.3 HEADRESTS.- The headrest shall be furnished as part of each seat as specified in 3.7.1.8.2.

3.19.1.4 BUNKS.- Not applicable.

3.19.1.5 SAFETY BELTS AND SHOULDER HARNESS.- Provision shall be made for use of an integrated harness system approved by the NAVAIRSYSCOM conforming in principle to Naval Parachute Unit DWG's 59E368 and 59E369, except that a manual separation feature shall be incorporated. The manual separation shall be by a guillotine operated manual release handle. The integrated harness assembly, compatible with the modified Martin-Baker H5 seat, shall be furnished and installed by the Government.

3.19.1.6 thru 3.19.1.13 Not applicable.

3.19.1.14 ANTIBLACKOUT SUIT PROVISION (CLASS VA AND VF AIRPLANES).- Applicable. The installation shall be in accordance with Spec MIL-I-7890-1 for the pilot and radar intercept officer. Two, Type 2 antiblackout valves in accordance with Spec MIL-V-9370B and MS24350-6 shall be installed.

3.19.1.15 PRESSURE SUIT PROVISION.- A ventilation-pressurization-respiration air system shall be provided for the pressure suits. Air from the cabin pressurization system shall be provided for the pressure suits at 3.0 psi gauge at all operating altitudes for ventilation. In the event of a loss of cabin pressurization, this air shall be available at 6.5 psi absolute. This air shall be furnished in the 50° to 120°F range at flows up to 10.5 cubic feet per minute STP per suit. Manual valves to control the flow of suit inlet pressurization-ventilation air shall be provided. These valves shall be located downstream of the junction between two air sources one of which provides for ventilation-pressurization air from the cabin pressurization system and the other for ventilation air which may be piped through an exterior fitting in the aircraft. Check valves shall be provided upstream of the junction between the two air sources. An external air source shall be provided for by means of an exterior fitting in the airplane in accordance with 3.6.4 of Spec MIL-P-18927(AER). A control accessible to the pilot shall be provided to set the desired suit inlet temperature of pressurization-ventilating air from the cabin pressurization system for the cockpit and pressure suits. The pressure suits shall be suitable for use with the equipment specified herein and shall conform to the size and arrangement of the tandem cockpit as approved by the Mock-up Board.

3.19.1.16 OXYGEN PROVISION.- The liquid oxygen system shall be designed to manufacture and deliver gaseous oxygen to the pilot and radar intercept officer at a continuous rate of up to 120 liters per minute at a pressure of approximately 70-90 psi. A GFAE low pressure ten liter liquid oxygen quick removable converter, MIL-C-19803B(WEP), ACEL 33H1083 shall be installed on a swinging type quick fastened access door in accordance with WADC technical memorandum Report WCRD-53-73 including Supplement No. 4. A capacitance type quantity gaging system shall be installed and/or provided for the pilot and the radar intercept officer in lieu of a direct reading type gage, and the filler valve shall be minimum of 11 inches from the overboard vent. Oxygen gaging electronic control amplifiers (Primary and Repeaters) shall be installed. The oxygen shall be supplied to the A13A oxygen mask for nonpressure suit flights. The oxygen containers and oxygen shall be included as useful load.

3.19.2 MISCELLANEOUS EQUIPMENT.- Miscellaneous equipment shall consist of:

Windshield Rain Removal System
Card Holder
Instrument Panels
Check-off Lists
Rear View Mirrors
Lockers (Miscellaneous Articles)

3.19.2.1 INSTRUMENT PANELS.- Applicable, except that Spec SR-74b(1) shall apply in lieu of Spec MIL-I-18373, and that instruments may be front mounted and instrument panels need not be shock mounted.

3.19.2.2 WINDSHIELD RAIN REMOVAL SYSTEM.- A rain removal system consisting of an air nozzle utilizing air diverted from the cockpit pressurization and defogging system shall be provided for that portion of the center windshield panel affected under light and moderate rain conditions during approach, landing, takeoff, and taxiing. A temperature sensing element shall be incorporated to furnish the pilot an indication of unsafe windshield temperatures. An on-off control shall be provided in the cockpit for operation of the rain removal system.

3.19.2.3 WINDSHIELD WASHERS.- Not applicable.

3.19.2.4 WINDSHIELD DEGREASING.- Not applicable.

3.19.2.5 REAR VIEW MIRRORS (CLASS VA, VF AND VT AIRPLANES).- Three rear view mirrors in the forward cockpit and two rear view mirrors in the aft cockpit shall be installed in accordance with Spec MIL-M-5755B. Mirrors in the forward cockpit shall be located on the arch of the forward cockpit, and mirrors in the aft cockpit shall be located on the canopy assembly. All mirrors shall have a demagnification ratio of 2-1/2 to one.

3.19.2.6 DATA CASES.- A data case shall be provided in the forward cockpit in accordance with McDonnell DWG 32-80013.

3.19.2.7 CHECK-OFF LISTS.- Applicable for the pilot and radar intercept officer except that the lists shall be illuminated in accordance with 3.16.8.2.

3.19.2.8 LOCKERS (MISCELLANEOUS ARTICLES).- A spare lamp storage compartment shall be provided in each cockpit. The compartments shall consist of a spring loaded tube and a snap-on lid that will hold six MS25237-327 lamps.

3.19.2.9 thru 3.19.2.11 Not applicable.

3.19.2.12 BALANCE COMPUTER.- A balance computer shall not be required. The weight and balance classification for this airplane shall be Class 1b in accordance with Spec MIL-W-25140.

3.19.2.13 AERIAL TOWED TARGET SYSTEM.- Not required.

3.19.2.14 CARD HOLDER.- A UHF frequency channelization card holder, mounted on the canopy rail in the front cockpit, shall be provided. Three airspeed correction card holders shall be provided, two in the front cockpit and one in the aft cockpit. (See 3.14.1.1 and 3.14.1.2).

3.19.3 FURNISHINGS.- Furnishings shall consist of:

Thermal Insulation as required
Instrument Glare Shield
Blackout Curtains (Aft Cockpit Only)

3.19.3.1 THERMAL AND ACOUSTICAL INSULATION.- Thermal and acoustical insulation shall conform with Spec MIL-I-7171B. Consideration shall be given in the design to the requirements of Spec MIL-A-8806.

3.19.3.2 thru 3.19.3.4 Not applicable.

3.19.3.5 INSTRUMENT GLARE SHIELD.- A glare shield fixed to the instrument panel shall be provided in the forward cockpit to prevent instrument reflections in the windshield.

3.19.3.6 SCREENS.- Not applicable.

3.19.3.7 BLACKOUT COVERS.- Blackout curtains shall be provided in the aft cockpit.

3.19.4 EMERGENCY EQUIPMENT.- Emergency equipment shall consist of:

Fire-Detection System

3.19.4.1 FIRE WARNING AND OVERHEAT DETECTION SYSTEM.- A fire-detecting system shall be provided for the engine compartments and an overheat detection system for the aft fuselage. Installation of the fire-detection system shall be in accordance with Spec MIL-D-7006 except that testing shall be in accordance with 4.2 of Spec MIL-D-7006A(ASG). Continuous type detectors shall be used. An aft fuselage overheat warning system shall be provided. Indication of aft fuselage overheating shall be provided by combination fire and overheat warning lights located on the main instrument panel. A fire-detection system for the electronic equipment compartments is not required.

3.19.4.2 thru 3.19.5 Not applicable.

3.20 AIR CONDITIONING AND ANTI-ICING EQUIPMENT.

3.20.1 AIR CONDITIONING

3.20.1.1 IN-FLIGHT AIR CONDITIONING. - In-flight air conditioning shall be provided as specified below.

3.201.1.1. OCCUPIED COMPARTMENT. - A cockpit pressurization and air conditioning system employing bleed air from the engine compressor for pressurizing, heating, cooling and ventilating the tandem cockpit and defogging the windshield and forward portion of the canopy shall be provided in accordance with Spec SR-163B, except as specified herein. The pressurization schedule shall be as noted below. The cockpit temperature control shall automatically maintain the incoming air at whatever value is selected. Operational controls shall be provided for the pilot. A combat pressure control shall not be required. Consideration shall be given in the design for minimizing the cabine leakage rate when the cabin differential pressure is at the maximum allowable value. It shall not be necessary to control the moisture content of the cockpit air supply. The comfort zone requirements of Spec SR-163B need not be maintained while delivering conditioned air to the pressure suit.

Flight Altitude	Pressurization Schedule
Sea Level - 8,000 Feet	No Pressurization $^{+0.35}_{-0}$ psi
8,000 Feet - 23,100 Feet	8,000 Feet Constant Cabin altitude $\pm$0.15 psi
23,100 Feet and above	5.0 psi differential $\pm$0.15 psi

3.20.1.1.2 OTHER COMPARTMENTS. - Air conditioning for the radar compartment shall be as specified in 3.17.9.

3.20.1.2 GROUND AIR CONDITIONING. - Applicable.

3.20.1.2.1 OCCUPIED COMPARTMENTS. - Pressure test fittings shall be provided for cockpit leakage test.

3.20.1.2.2 OTHER COMPARTMENTS. - Applicable, except that DWG's MS16052A and MS16051A shall apply. A single air inlet for connections to a duct from a mobile air conditioning unit shall be provided for ground air conditioning of the AN/AWG-10 in the fuselage nose group and the CNI, DDCS and AN/AWG-10 (Mod) AWCS located in the fuselage equipment compartments.

3.20.2 ANTI-ICING

3.20.2.1 thru 3.20.2.1.2 ANTI-ICING OF NONTRANSPAR NT AREAS. - Not required.

3.20.2.2 ANTI-ICING, DEFROSTING AND DEFOGGING OF TRANSPARENT AREAS OF.

3.20.2.2.1 ANTI-ICING.- Not required.

3.20.2.2.2 DEFROSTING AND DEFOGGING.- Applicable, except that Spec SR-163B shall apply in lieu of Spec MIL-T-5842, and that defrosting and defogging shall be for the pilot's windshield and canopy commensurate with side and aft vision afforded the pilot.

3.20.2.3 PROPELLER FLUID ANTI-ICING.- Not applicable.

3.20.3 CONTROLS.- Controls for operating air conditioning equipment shall be accessible to the pilot.

3.21 PHOTOGRAPHIC

3.21.1 DESCRIPTION.- Applicable.

3.21.2 thru 3.21.13 Not applicable.

3.21.14 RADAR RECORDING DEVICES (DIRECT RADAR SCOPE RECORDER (DRSR).- A radar recording camera and an associated control panel shall be provided in the radar intercept officer's (RIO) cockpit to monitor and record the radar tactical situation display during each azimuth sweep in the search mode and at preset intervals during track mode. Nomenclature assignment shall be in accordance with Spec MIL-STD-155A and nameplate shall be in accordance with Spec MIL-STD-130A. The camera assembly shall consist of two units, a periscope assembly and a 16 mm, KD-41A camera. The periscope assembly shall contain polaroid elements, a mirror, and an attachment for red filters. The 16 mm camera unit shall employ a standard 50 foot displacement type magazine and operate intermittently by pulses from a control panel. The camera assembly shall also contain intensity adjustment provision, a green motor run light, an amber "film remaining" light and correlator lights to monitor radar system functions and apply reference marks on recording film. The LD-58B control panel shall be readily accessible to the RIO and shall contain a rotary type power switch with "ON" and "OFF" positions; a three-position toggle "witness MK" switch with OFF, ON, and MC positions; and, a rotary type acquisition rate selector switch with FPS (frames per second) and a preset F/(aperature) setting.

3.22 AUXILIARY GEAR.- Applicable.

3.22.1 TOWING PROVISION.

3.22.1.1 LANDPLANES.- Towing provisions shall be in accordance with Spec MIL-STD-805 except that 5.1.3 shall not apply.

3.22.1.2 SEAPLANES.- Not applicable.

3.22.2 JACKING PROVISION.- Jacking provisions shall be in accordance with MIL-STD-809.

3.22.3 MOORING PROVISION.

3.22.3.1 LANDPLANES.- Tie-down fittings shall be provided to permit securing the airplane to the ground or carrier deck in accordance with the method shown in Spec MIL-A-8863. Tie-down fittings need not be provided on the wings; however, tie-down fittings for attaching to the pylon support lug B.L. 152.4 shall be provided to secure the airplane while being subjected to landing gear cycling. The tie-down fittings shall have a clear opening of not less than 3.2 square inches with the minor axis of the opening being not less than 1 inch. Sharp corners and abrupt bends in the fittings shall be avoided. The tie-down stock shall have essentially a circular cross-sectional shape.

3.22.3.2 SEAPLANES.- Not applicable.

3.22.4 HOISTING PROVISION.- Fittings shall be provided for attachment of slings to permit hoisting the complete airplane. Hoisting fittings also shall be provided on wing panels, tail surfaces, and other components when the weight is great enough to make manual handling for maintenance operations impracticable. (For hoisting slings, see 3.23.2.2.)

3.22.5 LEVELING.- Applicable, except that alignment of armament systems shall be as specified in 3.18.8.5.

3.22.6 WING SECURING PROVISION.- Not applicable.

3.22.7 ASSISTED TAKEOFF PROVISION

3.22.7.1 CATAPULTING.- Applicable.

3.22.7.2 JET-ASSISTED TAKEOFF.- Not required.

3.22.8 BARRICADE CRASH PROVISION (CARRIER BASED AIRPLANES).- Barricade crash provisions shall be provided. The structural design shall be in accordance with loading requirements described for this condition as specified in 3.4.1.1.4. Stainless steel barricade cutter knives shall be provided. The cutter knives shall be on the upper port and starboard fixed ramp support vanes which are located between the forward fuselage and the fixed ramp of the engine air duct.

3.22.9 ARRESTING HOOK INSTALLATION.- The arresting hook installation shall be designed in accordance with Spec SR-40D and McDonnell DWG 32-84001. The arresting hook shall be power retracted and shall have a contractor-furnished replaceable hook point. The arresting hook shall be suitable for use with the arresting gear specified in 1.1.3.3 and superior.

3.22.10 ARRESTING CHUTE.- A chute shall be provided in the tail cone section, in accordance with McDonnell DWG 32-33206. To deploy the chute, the control handle located in the pilot's cockpit shall be rotated in an up and aft direction. To jettison the chute, the pilot shall apply a slight aft motion to the control handle then depress button (located on the control handle), and permit the control handle to return to its original position. During initial rotation of the drag chute control handle, the chute "D" ring is permitted to lock in the mechanism and the remaining rotation shall open the door and deploy the chute. An access panel shall be provided to permit visual inspection of the chute rigging connection to the jettison mechanism.

3.23 SPECIAL EQUIPMENT.

3.23.1 GENERAL.- Applicable, except that the basic design gross weight shall be as specified in 3.4.1. Stowage provision need not be made in the airplane for special equipment. Safe-line wire rope clamps in lieu of spliced terminals may be used on ground service equipment furnished by the contractor.

3.23.2 SUPPORT EQUIPMENT.- Support equipment (including any design changes thereto) necessary for the support of F-4(FVS) airplanes shall be designed in accordance with Specs MIL-D-8512-1 or MIL-S-8512B-1, MIL-H-15362B(AER), MIL-T-18306A(AER), and MIL-T-21200(ASG) or MIL-T-21200C9ASG) as applicable. Special support equipment required solely for depot or overhaul use may be designed and fabricated and drawings prepared in accordance with best commercial practice in lieu of Military Specifications, unless otherwise specifically directed by the NAVAIRSYSCOM. Determination of support equipment shall be in accordance with the Addendum Y to WR-30. Special support equipment shall consist of the following items:

Hoisting Slings	Engine Covers
Wing Securing Devices	Air Intake Duct Screen
Engine Quick Change Unit	Landing Gear Ground Locks
Adapters	Special Tools
Removable Jack-Pads	Publications
Cockpit Covers	Steering and Tow Bars

3.23.2.1 BEACHING GEAR (SEAPLANES). - Not applicable.

3.23.2.2 HOISTING SLINGS.- Hoisting slings shall be in accordance with 3.4.3 of Spec MIL-A-8862 at a gross weight of 49,790 pounds.

3.23.2.3 thru 3.23.2.5 Not applicable.

3.23.2.6 WING SECURING DEVICES.- Devices for securing the wings in the overswept position shall be provided.

3.23.2.7 ENGINE QUICK CHANGE UNIT ADAPTERS.- Ground handling equipment for engine and afterburner removal shall be provided. Standard Navy equipment shall be used if possible.

3.23.2.8 REMOVABLE JACK-PADS.- Jack-pads shall be provided but need not be removable if installed flush with airplane contour.

3.23.2.9 STEERING AND TOW BARS.- Not required. A Navy universal tow bar shall be used if possible. If the Navy universal tow bar cannot be used, the design and furnishing of an alternate tow bar shall be the subject of separate negotiation.

3.23.2.10 REMOVABLE CONTROL SURFACE LOCKS.- Not required.

3.23.2.11 BORESIGHTING KITS.- Not applicable.

3.23.2.12 WING AND TAIL COVERS.- Not required.

3.23.2.13 ENGINE AND COCKPIT COVERS.- Engine covers shall be in accordance with Spec MIL-C-5778B and shall be of vinyl coated nylon. Cockpit covers shall be in accordance with Spec MIL-C-5778A.

3.23.2.14 AIR DUCT PLUGS AND SHIELDS.- Not applicable.

3.23.2.15 AIR INTAKE DUCT SCREENS.- Applicable, except that the screens shall be painted with an insignia red color number 11136 FED-STD-595 paint.

3.23.2.16 LANDING GEAR GROUND LOCKS.- Applicable.

3.23.2.17 RAM AIR TURBINE TEST EQUIPMENT ATTACHMENTS.- Not required.

3.23.2.18 SPECIAL TOOLS.- Special tools shall be provided as required for the proper maintenance and overhaul of the airplane. Applications requiring the use of special tools shall be kept to a minimum. The Catalog of Navy Material shall be reviewed to determine if existing special tools can be used. (For definition of special tools, see 6.5.14.)

3.23.3 PUBLICATIONS.- Applicable.

3.23.3.1 AIRPLANE LOGBOOK.- One government furnished Aircraft Logbook, NAVAER-418, or NAVWEPS 13090, shall be prepared and maintained, prior to delivery, in accordance with BUWEPSINST 4700.2, and shall be delivered with each airplane.

3.23.3.2 AERONAUTICAL EQUIPMENT SERVICE RECORD AND INVENTORY FORM.- One government furnished Aeronautical Equipment Service Record, NAVAER-418A or NAVWEPS 13090/30, for each equipment, and one Inventory Form DD 780 for each airplane shall be prepared and maintained prior to delivery with BUWEPSINST 4700.2, and shall be delivered with each airplane.

3.23.3.3 HANDBOOK OF WEIGHT AND BALANCE DATA.- Applicable.

3.23.3.4 AIRPLANE PUBLICATION KIT CONTAINER.- One Aircraft Publications Kit Container NAVAER-01-45HFE-506 shall be furnished by the government for stowing publications that are delivered with each airplane. Special stowage provision for this container shall not be required.

3.23.4 MISCELLANEOUS.- Not required.

4.0 SAMPLING, INSPECTION, AND TEST PROCEDURES.- Applicable.

5.0 PREPARATION FOR DELIVERY.- Preparation for delivery shall be as specified in the contract.

6.0 NOTES.

6.1 INTENDED USE.- Applicable.

6.2 SUPERSEDING DATA.- Applicable.

6.3 EXPLANATORY INFORMATION.

6.3.1 BUAER, BUWEPS AND NAVAIRSYSCOM.- Any reference to BUAER, BUWEPS, and NAVAIRSYSCOM herein shall mean Naval Air Systems Command, Washington, D.C., 20360.

6.3.2 BAR, BWR, AND NAVPLANTREPO.- Any reference to BAR, BWR, and NAVPLANTREPO herein shall mean the Naval Plant Representative, St. Louis, Missouri, for Naval Air Systems Command, Washington, D.C.

6.3.3 AIRPLANE.- Applicable.

6.3.4 USE OF GENERAL SPECIFICATION SD-24J.- Applicable.

6.4 ADDITIONAL INFORMATION.

6.4.1 AIRPLANES PROCURED FOR U.S. ARMY AND U.S. AIR FORCE.- Not applicable.

6.4.2 DEVIATIONS.- Applicable.

6.5 DEFINITIONS.

6.5.1 COMPLETE PROVISION FOR.- Applicable.

6.5.2 WEIGHT PROVISION FOR.- Applicable.

6.5.3 POWER PROVISION FOR.- Applicable.

6.5.4 SPACE PROVISION FOR.- Applicable.

6.5.5 AIRPLANE PARTS.- Applicable.

6.5.5.1 CRITICAL PARTS.- Applicable.

6.5.6 SHALL BE PROVIDED.- Applicable.

6.5.7 SHALL BE INSTALLED.- Applicable.

6.5.8 NOT INCLUDED IN NORMAL WEIGHT.- Applicable.

6.5.9 UNUSABLE FUEL.- "Unusable fuel" is defined as the total fuel that is unavailable to the engine under the conditions specified in Spec SR-73 for normal flight and landing conditions and includes "trapped fuel" as defined by Spec MIL-W-25140(ASG).

6.5.10 UNUSABLE OIL.- "Unusable oil" is defined as the total oil that is unavailable to the engine and other auxiliaries serviced by the engine oil tanks and includes "trapped oil" as defined by Spec MIL-W-25140(ASG).

6.5.11 ENGINE CHARACTERISTICS.- Applicable.

6.5.12 NONSTRUCTURAL.- Applicable.

6.5.13 PERSONAL EQUIPMENT.- Applicable.

6.5.14 SPECIAL TOOLS.- Special tools are defined as those tools required to maintain, repair, or replace parts peculiar to a specific airplane and are in addition to the tools contained in the standard procuring activity kit.

LIST OF APPENDICES

1 Master Configuration List (Part II) (attached)

Type

A Government furnished, Contractor installed

B Government furnished, Government installed

2 Complete List of ECP's (attached)

APPROVED

MASTER CONFIGURATION LIST

Model Designation F-4(FVS)

Fiscal Year Date

Page Number 1 Change Number BASIC Detail Specification Number SD-513-2

Comp Code	Item Number	Nomenclature	Specification Number	Drawing Number	Effectivity	Units Per	Type Inst	Weight	Inst Ld Tm	Cog
	101	J79-GE-10 ENGINE TURBOJET	E-2039		1-	2	A	7600.0		

EXPLANATIONS

EXPLANATIONS

NAVWEPS FORM 13050/3B (11-63)

APPROVED

MASTER CONFIGURATION LIST

Model Designation F-4(FVS)

Fiscal Year Date

Page Number 2 Change Number BASIC Detail Specification Number SD-513-2

Comp Code	Item Number	Nomenclature	Specification Number	Drawing Number	Effectivity	Units Per	Type Inst	Weight	Inst Ld Tm	Cog
	201	CLOCK A/C MECHANICAL ABU-9/A	MILC27298		1-	1	A	1.0		
	204	A-13A CLOCK ELAPSED TIME	MILC6499A	AND10403	1-	1	A	.5		
	205	MB-1 COMPASS STANDBY	MILC5604A	AN5766T4	1-	1	A	.7		
	206	INDICATOR AIRSPEED AND MACH NUMBER	MILI19570A	MS28095-1	1-	1	A	1.5		
	207	INDICATOR CABIN PRESSURE	MILI5099A-1		1-	2	A	.8		
	208	ABU-4/A ACCELEROMETER	MILA25949	MS23009-1	1-	1	A	1.5		
	202	AAU-19/A SERVOED ALTIMETER			1-	2	A	7.0		
	209	TRANSMITTER GAGE PRESSURE 0-5000 PSI	MILT7748B	MS28131-18	1-	3	A	3.4		

EXPLANATIONS

EXPLANATIONS

NAVWEPS FORM 13850/3B (11-63)

APPROVED

MASTER CONFIGURATION LIST

Model Designation F-4(FVS)

Fiscal Year Date

Page Number 3 Change Number BASIC Detail Specification Number SD-513-2

Comp Code	Item Number	Nomenclature	Specification Number	Drawing Number	Effectivity	Units Per	Type Inst	Weight	Inst Ld Tm	Cog
	210	GENERATOR TACHOMETER TYPE GEU-7/A	MILG26611		1-	2	A	1.6		
	211	TRANSMITTER GAGE PRESSURE 0-50 PSI	MILT7748B	MS28131-6	1-	2	A	.9		
	212	VERTICAL VELOCITY INDICATOR	MILI18804B	MS28075-2	1-	1	A	1.5		
	213	TRANSMITTER OIL PRESSURE 0-100 PSI TYPE MK-5	MILT25624B		1-	2	A	2.4		
	214	ATTITUDE DIRECTOR INDICATOR ID-1144/AJB-7 (MOD)			1-	1	A			
	220	ACCELEROMETER COUNTING GROUP NOTE: EITHER VJMV AND VTPB OR VJQB AND VTRD			1-	1	A	5.1		

EXPLANATIONS

EXPLANATIONS

NAVWEPS FORM 13050/3B (11-63)

APPROVED

MASTER CONFIGURATION LIST

Model Designation F-4(FVS)

Fiscal Year Date

Page Number 4 Change Number BASIC Detail Specification Number SD-513-2

Comp Code	Item Number	Nomenclature	Specification Number	Drawing Number	Effectivity	Units Per	Type Inst	Weight	Inst Ld Tm	Cog
	220-01	INDICATOR	MILA22145	MS25448-1	1-	1	A	3.5		
	220-02	TRANSDUCER	MILA22145	MS25447-6	1-	1	A	1.6		
	221	INDICATOR EXHAUST GAS TEMPERATURE	MILI27209	MS24569-1	1-	2	A	1.0		
	223	INDICATOR TACHOMETER	MILI25863A		1-	2	A	1.8		
	225	INDICATOR FUEL PRESSURE 0-50 PSI	MILI23479-2	MS17996-9	1-	1	A	1.4		
	226	INDICATOR HYDRAULIC PRESSURE 0-5000 PSI	MILI23479-2	MS17996-1	1-	3	A	2.1		
	227	INDICATOR OIL PRESSURE 0-100 PSI	MILI23479-2	MS17996-2	1-	2	A	1.4		

EXPLANATIONS

EXPLANATIONS

NAVWEPS FORM 13850/3B (11-63)

A

APPROVED

MASTER CONFIGURATION LIST

Model Designation F-4(FVS)

Fiscal Year Date

Page Number 5 Change Number BASIC Detail Specification Number SD-513-2

Comp Code	Item Number	Nomenclature	Specification Number	Drawing Number	Effectivity	Units Per	Type Inst	Weight	Inst Ld Tm	Cog
	228	AN/ASN-54(V) CONTROL SET APPROACH POWER			1-	1	A	12.5		
	228-01	AM-4376/ASN-54(V) AMPLIFIER ELECTRONIC CONTROL			1-	1	A	2.5		
	228-02	CP-832/ASN-54(V) COMPUTER THROTTLE CONTROL	MILC23866		1-	1	A	7.5		
	228-03	MX-6320/ASN-54(V) ACCELEROMETER AIRCRAFT			1-	1	A	1.5		
	228-04	MT-3512/ASN-54(V) MOUNTING			1-	1	A	1.0		
	229	INDICATOR ATTITUDE 2-INCH	MILI22859		1-	2	A	5.50		
	230	TRANSMITTER FUEL FLOW TYPE J-6A	MILT6598C		1-	2	A	11.5		

EXPLANATIONS

EXPLANATIONS

NAVWEPS FORM 13050/30 (11-63)

APPROVED

MASTER CONFIGURATION LIST

Model Designation F-4(FVS)

Fiscal Year Date

Page Number 6 Change Number BASIC Detail Specification Number SD-513-2

Comp Code	Item Number	Nomenclature	Specification Number	Drawing Number	Effectivity	Units Per	Type Inst	Weight	Inst Ld Tm	Cog
	301	AN/AWG-10 RADAR SET (MOD)			1-	1	A			
	301-01	AN/APG-59 RADAR SET (SINGLE SHOT) (MOD)			1-80	1	A			
	301-02	AN/APG-59 RADAR SET (MULTI-SHOT) (MOD)			81-					
	301-03	OA-6822/AWG-10 MISSILE CONTROL GROUP			1-	1	A			
	302	AN/ASW-27 DATA LINK SET			1-	1	A			
	302-01	CV-( )/ASW-27 DIGITAL-TO-DIGITAL ANALOG CONVERTER			1-	1	A	14.0		
	302-02	C-( )/ASW-27 DIGITAL DATA COMMUNICATIONS SET CONTROL			1-	1	A	1.0		
	304	AN/APN-154 X-BAND BEACON			1-	1	A	5.7		

EXPLANATIONS

EXPLANATIONS

NAVWEPS FORM 13850/3B (11-63)

APPROVED

MASTER CONFIGURATION LIST

Model Designation F-4(FVS)

Fiscal Year Date

Page Number 7 Change Number BASIC Detail Specification Number SD-513-2

Comp Code	Item Number	Nomenclature	Specification Number	Drawing Number	Effectivity	Units Per	Type Inst	Weight	Inst Ld Tm	Cog
	304-01	RT-681/APN-154 RECEIVER TRANSMITTER			1-	1	A	5.0		
	304-02	CU-1104( )/APN-154 DUPLEXER			1-	1	A	0.3		
	304-03	C-4419/APN-154 CONTROL PANEL			1-	1	A	0.4		
	303	AN/ARA-50 AUTOMATIC DIRECTION FINDER			1-	1	A			
	303-01	AM-3624/ARA-50 ADF			1-	1	A	5.0		
	305	ID-663/U OR ID-663A/U OR ID-663B/U OR ID-663C/U BEARING DISTANCE HEADING INDICATOR	MILI22075		1-	1	A	3.5		

EXPLANATIONS

EXPLANATIONS

NAVWEPS FORM 13050/3B (11-63)

APPROVED

MASTER CONFIGURATION LIST

Model Designation F-4(FVS)

Fiscal Year Date

Page Number 8 Change Number BASIC Detail Specification Number SD-513-2

Comp Code	Item Number	Nomenclature	Specification Number	Drawing Number	Effectivity	Units Per	Type Inst	Weight	Inst Ld Tm	Cog
	310	AN/APN-141(V) ALTIMETER SET ELECTRONIC			1-	1	A	11.4		
	310-01	RT-601B/APN-141(V) RECEIVER-TRANSMITTER			1-	1	A	6.0		
	310-02	SA-791A/APN-141(V) SWITCHING UNIT RADIO FREQUENCY			1-	1	A	3.0		
	310-03	ID-881A OR B/APN-141(V) HEIGHT INDICATOR			1-	1	A	2.0		
	310-04	AS-1233/APN-141(V) ANTENNA			1-	2	A	.4		

EXPLANATIONS

EXPLANATIONS

NAVWEPS FORM 13850/3B (11-63)

APPROVED

MASTER CONFIGURATION LIST

Model Designation F-4(FVS)

Fiscal Year Date

Page Number 9 Change Number BASIC Detail Specification Number SD-513-2

Comp Code	Item Number	Nomenclature	Specification Number	Drawing Number	Effectivity	Units Per	Type Inst	Weight	Inst Ld Tm	Cog
	312	ELECTRONIC CENTRAL CNI	MILI18309	32-87103-F	1-	1	A			
	312-02	RT-( )APX-72 AIMS TRANSPONDER			1-	1	A	12.0		
	312-04	AN/AIC-14A INTERCOMMUN STATION			1-	2	A	5.4		
	312-06	AS-909/ARA-48 ANTENNA			1-	1	A	9.5		
	312-07	ID-1311/ASQ INDICATOR FREQUENCY CHANNEL			1-	1	A	3.0		
	312-08	BIRD TYPE 5238 FILTER			1-	1	A	.6		

EXPLANATIONS

EXPLANATIONS

NAVWEPS FORM 13850/3B (11-63)

Model Designation F-4(FVS)

Fiscal Year Date

Page Number 10 Change Number BASIC Detail Specification Number SD-513-2

APPROVED

MASTER CONFIGURATION LIST

Comp Code	Item Number	Nomenclature	Specification Number	Drawing Number	Effectivity	Units Per	Type Inst	Weight	Inst Ld Tm	Cog
	312-09	C-6684/ASQ UHF AND AUX RECEIVER CONTROL			1-	2	A	10.0		
	312-10	C-6280(P)/APX TRANSPONDER CONTROL 28 VOLT			1-	1	A	2.0		
	314	AN-APX-76 AIR TO AIR IFF			1-	1	A	35.0		
	314-01	RT-( )/APX-76 INTERROGATOR RECEIVER - TRANSMITTER			1-	1	A	17.5		
	314-02	SN-( )/APX SYNCHRONIZER - CODER -DECODER			1-	1	A	8.0		
	314-03	SA-( )/APX RF AMPLIFIER - SWITCH			1-	1	A	8.0		

EXPLANATIONS

EXPLANATIONS

NAVWEPS FORM 13850/3B (11-63)

A

APPROVED

MASTER CONFIGURATION LIST

Model Designation F-4(FVS)

Fiscal Year Date

Page Number 11 Change Number BASIC Detail Specification Number SD-513-2

Comp Code	Item Number	Nomenclature	Specification Number	Drawing Number	Effectivity	Units Per	Type Inst	Weight	Inst Ld Tm	Cog
	314-04	C-( )/APX CONTROL PANEL			1-	1	A	1.5		
	316	WARNING RECEIVER SET			1-	1	A			
	316-01	R-( )/APR-27 RECEIVER			1-	1	A			
	316-02	SELF TEST UNIT			1-	1	A			
	317	RADIO RECEIVING SET, AN/ARR-69			1-	1	A			
	317-01	RADIO RECEIVER (AUX) R-1286/ARR-69			1-	1	A			
	317-02	MOUNT MT-3590/ARR.69			1-	1	A			

EXPLANATIONS

EXPLANATIONS

NAVWEPS FORM 13050/3B (11-63)

APPROVED

MASTER CONFIGURATION LIST

Model Designation F-4(FVS)

Fiscal Year Date

Page Number 12 Change Number BASIC Detail Specification Number SD-513-2

Comp Code	Item Number	Nomenclature	Specification Number	Drawing Number	Effectivity	Units Per	Type Inst	Weight	Inst Ld Tm	Cog
	400	ELECTRIC GENERATING SYSTEM 30 KVA	MILG21480	MS90302	1-	1	A	118.0		
	400-01	GENERATOR AC 30 KVA TYPE A	MILG21480	MS90302	1-	2	A	100.0		
	400-02	CONTROL PANEL	MILG21480	MS90302	1-	2	A	18.0		
	401	CONSTANT SPEED DRIVE TYPE A	MILT7101A	MS90301	1-	2	A	99.0		
	403	POWER SUPPLY TRANSFORMER RECTIFIER 28V 100 AMP	MILC7115B	MS17976-2	1-	2	A	19.0		
	404	POWER CONTROL BOX P/N 6043H1-5			1-	1	A	11.0		

EXPLANATIONS

EXPLANATIONS

NAVWEPS FORM 13850/3B (11-63)

APPROVED

MASTER CONFIGURATION LIST

Model Designation F-4(FVS)

Fiscal Year Date

Page Number 13 Change Number BASIC Detail Specification Number SD-513-2

Comp Code	Item Number	Nomenclature	Specification Number	Drawing Number	Effectivity	Units Per	Type Inst	Weight	Inst Ld Tm	Cog
	501	DCU-94/A CONTROL - MONITOR OR EQUIVALENT			1-	1	A	2.0		
	504*	MAU-9A/A EJECTOR RACK			1-	2	A			
	508*	MER-7 MULTIPLE EJECTOR RACK			1-	3	A			
	509*	TER-7 TRIPLE EJECTOR RACK			1-	2	A			

EXPLANATIONS

* RACKS SHALL BE DELIVERED CONCURRENT WITH THE CFE MULTIPLE CONVENTIONAL WEAPONS KIT, BUT NOT INSTALLED ON THE AIRPLANE.

EXPLANATIONS

NAVWEPS FORM 13050/3B (11-63)

APPROVED

MASTER CONFIGURATION LIST

Model Designation F-4(FVS)

Fiscal Year

Date

Page Number 14

Change Number BASIC

Detail Specification Number SD-513-2

Comp Code	Item Number	Nomenclature	Specification Number	Drawing Number	Effectivity	Units Per	Type Inst	Weight	Inst Ld Tm	Cog
	700	RIGID SEAT SURVIVAL KIT		ACEL 31H1260	1-	2	A	40.0		
	701	PARARAFT KIT PK-2 W/O INNER OR OUTER CONTAINER	MILK8664	NAF603946	1-	2	A	46.0		
	702	VALVE ANTI-BLACKOUT	MILV9370B		1-	2	A	1.7		
	703	CONVERTER LIQUID OXYGEN 10 LITER	MILC19803B	ACEL 33H1083	1-	1	A	20.0		
	707	M-B-B/MBEU/7840 CARTRIDGE PRIMARY			1-	2	A	1.0		
	708	M-B-B/MBEU/5351 CARTRIDGE AUXILIARY			1-	4	A	1.3		

EXPLANATIONS

EXPLANATIONS

NAVWEPS FORM 13850/3B (11-63)

APPROVED

MASTER CONFIGURATION LIST

Model Designation F-4(FVS)

Fiscal Year Date

Page Number 15 Change Number BASIC Detail Specification Number SD-513-2

Comp Code	Item Number	Nomenclature	Specification Number	Drawing Number	Effectivity	Units Per	Type Inst	Weight	Inst Ld Tm	Cog
	709	REAR VIEW MIRROR 2-1/2 TO 1	MIL-M-5755B		1-	5	A			
	710	OXYGEN GAGING ELECTRONIC CONTROL AMPLIFIER (PRIMARY)	MIL-G-19053		1-	1	A	.5		
	711	OXYGEN GAGING ELECTRONIC CONTROL AMPLIFIER (REPEATER)	MIL-G-19053		1-	1	A	.5		
	712	AN/AWW-2A FUSE FUNCTION SET			1-	1	A			

EXPLANATIONS

EXPLANATIONS

NAVWEPS FORM 13850/3B (11-63)

APPROVED

MASTER CONFIGURATION LIST

Model Designation F-4(FVS)

Fiscal Year Date

Page Number 16 Change Number BASIC Detail Specification Number SD-513-2

Comp Code	Item Number	Nomenclature	Specification Number	Drawing Number	Effectivity	Units Per	Type Inst	Weight	Inst Ld Tm	Cog
	801	AIRCRAFT LOGBOOK NAVAER 418 OR NAVWPES 13090			1-	1	A	.		
	802	AERONAUTICAL EQUIPMENT SERVICE RECORD NAVAER 418A OR NAVWEPS 13090/30			1-	1	A	.		
	803	HANDBOOK OF WEIGHT AND BALANCE DATA AN 01-1B-40			1-	1	A	.		
	804	AIRCRAFT PUBLICATIONS KIT CONTAINER NAVAER 1-45HFE-506		NAS 80020-	1-	1	A	.		
	805	MK-9-0 SEPARATION CARTRIDGE	0S11695	LD537906	1-	12	A	1.2		

EXPLANATIONS

EXPLANATIONS

NAVWEPS FORM 13050/3B (11-63)

APPROVED

MASTER CONFIGURATION LIST

Model Designation F-4(FVS)

Fiscal Year Date

Page Number 17 Change Number BASIC Detail Specification Number SD-513-2

Comp Code	Item Number	Nomenclature	Specification Number	Drawing Number	Effectivity	Units Per	Type Inst	Weight	Inst Ld Tm	Cog
	806	M3A1 INITIATOR			1-	4	A	3.0		
	807	M-B/MBEU/16650 CARTRIDGE GUILLOTINE			1-	2	A	.8		
	808	INITIATOR M5 (T5)			1-	1	A	.7		
	809	CARTIRDGE BOMB EJECTOR MK-1-3			1-	1	A	NEG.		
	810	CARTRIDGE BOMB EJECTOR MK-2-1			1-	1	A	NEG.		
	811	B/MBEU/7536 CARTRIDGE DROGUE GUN			1-	2	A	.2		

EXPLANATIONS

EXPLANATIONS

NAVWEPS FORM 13850/3B (11-63)

A

APPROVED

Model Designation F-4(FVS)

MASTER CONFIGURATION LIST

Fiscal Year Date

Page Number 18 Change Number BASIC Detail Specification Number SD-513-2

Comp Code	Item Number	Nomenclature	Specification Number	Drawing Number	Effectivity	Units Per	Type Inst	Weight	Inst Ld Tm	Cog
	315	MARK - XII IFF CRYPTOGRAPHIC UNITS			1-	1	B	29.0		
	315-01	KIR-1A/T SEC INTERROGATOR COMPUTER			1-	1	B	10.0		
	315-02	KIT-1A/T SEC CRYPTOGRAPHIC - COMPUTER			1-	1	B	19.0		
	510	LAU-7/A GUIDED MISSILE	MILI22620		1-	4	B	340.0		
	511	LAUNCHER								
		POWER SUPPLY PP-2581/A	MILP22621		1-	4	B			
	704	D-704 AIR REFUELING STORE DAC P/N 5547000-523	MILA22847		1/4-	1	B	725.0		

EXPLANATIONS

EXPLANATIONS

NAVWEPS FORM 13050/3B (11-63)

APPENDIX 2

COMPLETE LISTING OF ENGINEERING CHANGE PROPOSALS

ECP NO.	AUTHORIZATION (IBCC/CO. NO.)	TITLE OF CHANGE
3	E1350	Substitution of clock
4	E1128	Elimination of relief tube installation
5	F1008	Deletion of ejection seat lap belt and shoulder harness
6	F34	Provisions for spare lamp storage
8	F35	Installation of test receptacles
9	F38	Addition of switches
10	F33	Modification of instrument mounting and lighting
13	E1269	Provisions for use of portable bomb hoists
14	F706	Modification of sway brace installation
16	BuAer Ltr. Aer-AE-712/94, 21 Oct. 1957	Substitution of angle-of-attack indicator
19	F64	Automatic retraction of aft radar scope mounting
20	G107	Installation of blackout curtain in aft cockpit
21	F64	Change of composite disconnect and cabin altimeter addition
23	F955	Aero 15A combination bomb rack and rocket launcher
25	F283	Increase capacity of liquid oxygen converter
26	F424	Addition to and revision of exterior lights system
27	F591	Installation of continuous indicating oil pressure indicating system
31	F814	Deletion of requirement for radar set control and azimuth elevation-range indicator control in front cockpit
35	F678	Modification of special weapon and rocket installation
37	G477, H380	Design and installation of seat pan assembly
40	F45	Replacement of altimeters
41	F967	Incorporation of automatic stowage of radar control panel
42	G390	Modification of approach light installation
45	G265	Modification of caution & warning lights
47	F162	Deletion of control surface locks
50	G296	Addition of join-up auxiliary wing tip and anticollision lights

APPENDIX 2 (Cont)

ECP NO.	AUTHORIZATION (IBCC/CO. NO.)	TITLE OF CHANGE
51	BuAer ltr. Aer-AE-6314/219, 2 Aug. 1957	Addition of marking arrows for cockpit emergency ground entrance handles
53	H589, H824, H897	Addition of provisions to fire aft missiles with centerline tank aboard
54	F408	Engine section-revision to detail specification
57	G742	Changes in arrested landing strength
59	G370	Substitution of turbine outlet temperature indicator
60	F649e	Change to improved tachometer generator
61	G435 & L25	Provisions for neutral engine buildup
62	G369	Incorporation of nozzle position indicator
64	G22	Substitution of anti-blackout valve
73	G21	Removal of restriction on missile launching system (This ECP supersedes ECP 36)
74	G811, H380	Incorporation of Martin-Baker ground level ejection seat (This ECP supersedes ECP's 17, 18, 29 and 98)
75	G809	Installation of drag chute
83	M470, K624, H986, L647, K577, K623	Addition of data link (space provision only)
86	G197b	Cancellation of aircraft tail warning system
89 R-1	G768, H247, H569, H884, K540, K623, M36	Installation of sidewinder and additional Sparrow III Missiles
90	K506, K319	Incorporation of nosewheel steering capability
94	H985	Change in special store requirement
95	G528	Deletion of AN/APX-20
99 R-1	K526a, & b K623, L373, L412, L431, H696, H825	Extension of in-flight refueling probe
100	H173, H744	Redesign and relocation of radar hand control
101	G758a	Specification change for Model CP-5 pod (Supersedes ECP 28)
104	H695	Provisions for automatic emergency IFF
106	G954	Change of material for main landing gear wheel
107	H142	Deletion of communication electronic counter-measures system
108	H547	Incorporation of AABS radiating aural tone
110	H475, K26, K319	Cockpit modernization (This ECP supersedes ECP 52)

APPENDIX 2 (Cont)

ECP NO.	AUTHORIZATION (IBCC/CO. NO.)	TITLE OF CHANGE
111	H953, K623	Incorporation of 10° - 14° duct inlet ramp
112	H475, K26, K319	Incorporation of improved main instrument panel displays (This ECP supersedes ECP 52)
113	K34, K77b K421	Additions, corrections and deletions to F-4B Detail Specification (Supersedes ECP 91)
118	H499, K319	Elimination of magnesium from external surfaces
119	K456, K623, K36, H642, M284	Increased sink speed and gross weight for carrier landings
120	H642, K514 K554	Addition of M5-T5 initiators with cartridges Airplane improvements recommended by the Maintenance and Engineering inspection
123	K35, K241, K868, K673, L440	Redesign of the F-4B wing for increased fatigue strength
124	K247	Repositioning of pilot's control stick
125	K135	Incorporating of quick removal oxygen converter
125 Pt. II	L269, M29	Incorporation of J79-GE-8 engines (Supersedes ECP 69, 11 and 93)
128	H852, K319	Replacement of remote compass transmitter
130	H911e, K439e	Replacement of GFE counter-pointer altimeter by GFE three pointer altimeter
131	H883	Deletion of requirement of security antenna
135	K22, K334	Modifications to Martin-Baker seat
136 R-1	L34, L202, L777, M551 K639, L311	Provision for Douglas D-704 air refueling store (Supersedes ECP 44) MKH5 ejection seat; provisions for removal of seat bucket
140 R-1	K462	Landing gear heat shields, incorporation of
141	K160	Modification of impingement starting ducts
142	K405	Deletion of requirement for warning lights for primary fuel pump failure
149	K161	Change in detail specification for practice bomb containers
150	--	Three position T/E flaps, incorporation of
151	K571	Revision of brake bleeding system
157	K703, K789	Pneumatic system fiberglass air bottles; replacement of
159	L203, L778	Propulsion system controls and canopy control handles
160	M213	Autopilot, changes to
162 R-1	L578	Aft fuselage section, redesign of
164	K802	Nose strut lower bearing improvement
165	L274a & b	Special weapons installation corrections
166	M489, M490	Correction of BIS mandatory items
172	L663, 41-142	Aero 7A missile launcher modification

APPENDIX 2 (Cont)

ECP NO.	AUTHORIZATION (IBCC/CO. NO.)	TITLE OF CHANGE
174	L233	Fuel tank #2 alignment of fuel cell wall
175	BuWeps ltr. RAAE-2412/12: AEA 5/13/61	Redesign of fin tip
176	L477	Engine bleed line support brackets and flexible bellows improvement of
179	M165	Redesign of engine door seals
182	M28	Arresting hook shank redesign
183	L201	Cockpit indication of auxiliary air door position
184	L454	Replacement of electrical connectors in impingement starting system
189	K255, K758b	GFAEL, altimeter Type MC-3 change CFE to GFE
190	L424	Fin trailing edge skin, redesign of
193	L332, L540	Direct radar scope camera
194	L581	Lower engine side brace, redesign of
195	L358, L333	Alighting modification to axle
196	L425	Improvement of ram air turbine
197	L238, L348	Stabilator leading edge, redesign of
201	L478	Improvement of BLC system
202 R-1	N709	Bendix Pacific Radar Altimeter, AN/APN-141 incorporation of
206	L724, 41-142	Main landing gear inboard door mechanism, improvement of
207	L347	Flap control switch operating force, improvement of
210	L9	Instrument GFAEL differential pressure transmitter
215	L52	Wing and tail covers, deletion of
216	L481	Installation of ARI bellcrank
218	M666	Flight control modification of ARI system
219	L347	Increase exterior lights switch clearance
221	L238	Centerline store rack servicing improvements
226	L347	Altitude pressure sensing provisions, deletion of
228	L515	Wing missile pylon aft sway brace locking and addition of missile keeper slot on R/H wing missile pylon rail
231	L484	Flight director attitude indicator sensitivity, increase to
233	L498	Hydraulic shuttle valve, replacement of
239	M144	Reroute of generator drain line
240	L678	Leading edge BLC duct seals, improvement of
245	L751	Bendix navigation computer, incorporation of
247	M855	Catapult hook redesign

APPENDIX 2 (Cont)

ECP NO.	AUTHORIZATION (IBCC/CO. NO.)	TITLE OF CHANGE
250	M18	Separate wiring for buddy tank, incorporation of
251	M140	Airplane special weapons provisions, change to
253	L485	Change to time delay relay for missile firing circuit
255	L347	Dual temperature control of radar refrigeration unit, incorporation
258	L347, M266	Compact wire bundles, incorporation of
259	L348	Missile wing interference, elimination of
260	L348	Correction of BIS mandatory items by M.A.C.
261	L516	Pressure operated canopy valve, redesign of
262	L347	Missile indicator panel, changes to
263	L348	Exterior lights, changes to
265	L494	Brake control and hydraulic pneumatic valves, change in Vendors
269	L331	Fuel shut-off valve, change in
272	L644	Epoxy finish for F-4B aircraft, incorporation of (supersedes ECP 48)
273	L577	Anti-icing of engine bullet nose
274	L679	Simplification of hydraulic system
276	L583, N490	Manually operated sway brace of centerline stores
277	L543	MK 9 cartridge, external wing tanks
278	L517	Brake accumulator, relocate for clearance
280	L455	Modification of generator control panels and deletion of certain generator test requirements
282	L544	CADC for 32-inch radar antenna, changes to
283	L488	Nose landing gear up-latch bellcrank replacement
285	L583	Centerline rack improvement
287	L452	Installation of caution light control panel
289	L482	Improved liners for hydraulic hoses
291	L459, L459b	Martin-Baker seat modification for improved performance
303	L483, 41-550	Substitution of statistical accelerometer
305	L432, M41[illegible]	Improved material and support of hydraulic and pneumatic lines
308	L518	Changes required due to effect on spares
310	L645	Arresting hook trail angle modification
313	L585	Addition of cable guard and stiffener in survival kit
314	M214	AFCS improvements based on BIS-ITP comments
315	M142	Hydraulic motor driven fuel transfer pumps, changes to

APPENDIX 2 (Cont)

ECP NO.	AUTHORIZATION (IBCC/CO. NO.)	TITLE OF CHANGE
318	M57	Fuel transfer system revisions
319	M269	External fuel caution light, removal of
320	L682, M39, 41-142	Static drain line routing improvement
321	M268	Hydraulic motor driven transfer pump change
324	M472	Modification of nose gear steering wiring
325	M143	Oil tank fill line, deletion of
326	L797b	Liquid oxygen converter, change from CFE to GFE
327	M166	Steel L.E. flap fittings, incorporation of
329	L811, 41-142, M546, 41-153 N496, M821, M857, N708	Conventional weapons capability, incorporation of
330	L542	GFE hydraulic pressure transmitter, change of
331	L768	Canopy emergency air bottles standpipe, addition of
333	M167	Arresting hook not up light, addition of
335 R-3	M526, 41-847, 41-847 R-1	Modification of fuel tank (fuselage) pressure and vent system
336	M141	Stability augmentation off indication
339	M168	CADC revision, altitude and airspeed
340	M43	Modification of the J79-GE-8 engine oil scavenge system
343	M245, M961	Engine bleed air manifold duct clamp
345	M229, N107	Engine oil pressure transmitter insulation
346	M378	Prevention of throttle system freezing
352	M380, N222, N428	Addition of Sparrow III 6b capability
353	M667	CADC pressure lines connector, improvement of
356	M398, N166	Impingement starter duct support, redesign of
358	M703	Incorporation of poppet valve in pressurization system.
359	M740	Autopilot improvements
364	M471, M789	Installation of bumper assembly catapult pan
368	M17	Control monitor T-249A or DCU-75/A, change of (Supersedes ECP 337)
369	M626	Revised pressure system reference to oil pressure transmitter
371	M145	Addition of GFE cartridge, bomb ejector, CFAEL change
372	M538	Improve routing of wire bundle to stabilator actuator
377	M672	Fuselage-modification of fuel tank side panel

APPENDIX 2 (Cont)

ECP NO.	AUTHORIZATION (IBCC/CO. NO.)	TITLE OF CHANGE
378	M745	Modification of fuel system external wing fuel fuselage hose
381	M367	Hydraulic and fuel boost pump pressure, GFE
383	M628	Change of spring, flexible conduit, fire detector system
386 R-1	N288, 41-496	Sidewinder 1C missile audio tone, installation of
387	M704	Replacement of emergency pneumatic system, canopy pressure valve
388	M706	Addition of integral screen filter fitting, pneumatic system
389	M795	Power Plant - rerouting of CSD oil return line
391 Pt II, IV	N277, N662	Incorporation of wing fatigue improvements
395	N26	Dimming provisions for approach light indexer
396	N220, N480	Relocation of ARI disconnect
398	N225, 41-417	Improvement of forward missile cavity and fin door operating mechanism
405 R-1	41-172	Catapult holdback system redesign
406	M562, N230	GFAEL change, air refueling store Model D704
408	N164	Addition of two micron filters to CADC
409	M905	Changes to BLC OWLE flap, inboard fairing
411	N111	Arresting gear up-latch mechanism modification of
415	M473	Insulation of engine fuel inlet pressure transmitter
419	N112, N430, 51-83	Barricade cutter knife installation
420	N219	Bellmouth cylinder assembly, simplification of
424	N260	Emergency flap operation, change to
426	M922	Modification of external wing pylon attach mechanism
427 R-1	M938, 41-90	Fuel system fuel transfer line, replacement of
434 R-1	41-708, 6126	Autopilot system improvement
437 R-1	N227, N502, 41-433	Angle-of-attack transmitter, replacement of
438	N243	Total temperature sensor, replacement of
439	N287, N661	Airspeed pitot tube, replacement of
441 R-2	51-393, 51-810	Data link provisions
442	N700	Touch up of dimples and countersinks exposed to exterior environment

APPENDIX 2 (Cont)

ECP NO.	AUTHORIZATION (IBCC/CO. NO.)	TITLE OF CHANGE
443	N417	Feel system venturi and probe heaters, addition of
446 R-1, S-1	41-188, 41-399	Change in integral tank coating
447	N331	Fuel system, redesign of
448 R-1, S-1	N605, 51-277	Stabilator actuator improvement change
449	N495	Modification to IFF/TACAN antenna system, elimination of multiplexing system
457 R-1 Pt II	51-32, 51-341	Landing Gear; Main and Nose Wheel Tire and Actuator
457 R-2	51-267	Drooped aileron and slotted leading edge stabilator
457 R-3	51-388	Incorporation of structural beef-up for 38,000 lb. LGW
460	N555	Main landing gear tube filler, redesign of
461	41-3	Valve motors in heat and vent system, replacement of
465	N554	Main landing gear metering tube special nut, change of
468 R-1, R-2, R-3	41-246, 51-741, 51-748	Approach power compensator system, installation of
470	N136	Seal assembly BLC cutout and boot assembly clearance
471 R-1	41-86	Upper forward engine mount trunnion redesign
473 R-1	N391	Air conditioning system cabin cooling turbine modification of
484	N644	Down stop catapult holdback door
486	N646	Access door sealing and drain hole addition to improve behavior, wing and fuselage
487 R-1	41-130	LAU-17/A wing missile pylon explosive bolt
490	N284	Aft missile well fairing beef-up
491 S-2	51-570	Addition of MK-4 gun pod on centerline
494	N710	Incorporation of MK-43 and MK-57 special weapon capability
495	N525	Forward missile fin door closing time change
496	41-154	Aero 7A fuselage launcher latch indicator
497	N606	Fire detector element relocation on door 83 R/L
498	41-30, 41-30 R-1	Replace transformer rectifier input fuse with a circuit breaker
499 Pt. I	41-257	Rain removal system, modification of
501 R-3	61-366	J79-GE-10 engines; installation of
505 R-1	41-182, 41-182 R-1	Improved main landing gear side brace actuator for 36,000 lb. gross landing weight

APPENDIX 2 (Cont)

ECP NO.	AUTHORIZATION (IBCC/CO. NO.)	TITLE OF CHANGE
506	41-92	Replacement of auxiliary air door fitting
507	41-2	Incorporation of eject light
508 R-1	41-183, 41-183 R-1, 41-183 R-2	New outer barrel for nose landing gear strut
509	41-694	Replacement of buddy fill switch
510	41-225	Engine starting, alternate method for
515 S-1	41-637	Improvement of wing tip position light
518	N409	Weld assembly, aft missile fin fairing
519	41-416	Fuel quantity and oxygen gaging wiring system, change of electrical connectors in
520	41-275	Various components, second source of
522	41-418	Conventional weapon intervalometer, replacement of
523	41-520	Flight control - longitudinal feel system, damper linkage modification
526	41-420	Pneumatic system rerouting of canopy air lines
527	41-140	Hydraulic motor driven fuel transfer pump, improvement of shaft seal
529	41-376	Internal wing tank drain relocation
530 R-1 S-1	41-332 R-1, 51-31, 51-223	Two inch attitude indicator, installation of
532	51-1111R-1	Nose gear steering system; modification of
535	41-575	Fuel system marman clamp change of
536	41-848	Fuel system boost pump relay circuitry change
539	41-571	Pilot's flight indicator,secondary re-straining device
541 R-1	51-680	Incorporation of safety provisions into the engine fuel shut off valves
544 R-1	51-798	Rear seat map and data case; removal of
546	41-764	External wing fuel transfer circuitry change
547	51-387, 51-607	AWG-10 Radar, production incorporation
548	41-378	Stability augmentation off warning light wiring; correction to
553	51-61	B.L. 132.50 pylon support fitting
554	--	F-4 inservice configuration management program
556	41-462, 41-750	MCL change - PK-2 survival kit
559	41-616a	MCL change incorporation of pressure indicators
560	41-823	Addition of external power transformer rectifier fuse
562	41-826, 51-84	Incorporation of improved top latch assembly M/B ejection seat
564	51-35	Improved windshield assembly
565	51-389	3500 channel UHF

APPENDIX 2 (Cont)

ECP NO.	AUTHORIZATION (IBCC/CO. NO.)	TITLE OF CHANGE
566	51-873, 61-412	Incorporation of AIMS and MCL change
571	51-391	Weight saving - Items 4, 12, 13 and 14
571	51-284, 51-652, 51-959	Weight saving - Item 5
571	51-455	Weight savings - Item 11
571 S-1, R-1	51-390	Weight saving - Min. CNI
573 S-1, S-2	51-75, 51-453	30 KVA generator system
578	51-282	Fuel flowmeter fittings removal of
580	41-864	Fuel manifold bellows redesign
581	51-338	Aft overheat warning connector change
585	41-460	Fire warning flex assembly, replacement of
586	51-281	Wing leading edge BLC duct, replacement of
587	51-60	BLC valves trailing edge, modification of
589	51-778 R-1	Oxygen system; supply & vent lines, replacement of
591	51-699	Hydraulic, rudder power control cylinder modification of
594	51-337	Redesign of PCC main ram transducer
596	51-459	Change in vendors FY'65 cost review
598	51-553	Addition of aircraft service markings and NATO numbers
600	51-489	Replacement of parachute quick disconnect fittings
601 R-1	51-886	Installation of two point oil quantity gaging system
604 S-1	51-347a	A-C generators split bus operation
606 S-2	51-681	Incorporation of automatic fuel transfer provisions
609	51-325	Fuel system wing fuel transfer hose replacement of
610	51-1085	Boundary layer control (BLC) system; half-flap BLC malfunction light, incorporation of
612	51-392a	Brake control valve upgrading of manual mode
614	61-375	Ram air turbine generator drive quill shaft; modification of
619	51-912	Air conditioning system, temperature control system
621	61-208, 61-439	Improved corrosion protection
627	51-360	Fuel boost pump check switches
628 S-1, S-2	61-44, 61-302	Rear view mirror; addition of
630	61-41	Main landing gear sidebrace actuator downlock fitting; modification of

APPENDIX 2 (Cont)

ECP NO.	AUTHORIZATION (IBCC/CO. NO.)	TITLE OF CHANGE
631 Pt. II	61-494	Centerline fuel tank aboard warning light
633	61-39	Wheels warning light legend plate change
635	61-379	Wing trailing edge flap honeycomb redesign
640	51-976	Engine bleed air port; gasket and bolts; replacement of
641	61-547	Incorporation of AN/ASW-25A data link systems
649, Pt. I	61-482	Martin-Baker MK-H5 ejection seat; modification of leg restraint systems
649, Pt. II	61-785	Martin-Baker MK-H5 ejection seat - secondary firing control linkage modification
650	61-548	Cabin refrigeration unit water drains
663	61-181, 61-524	Incorporation of lumbar pad on F-4 ejection seat
665	61-213	Hydraulic system, utility pressure line assemblies; replacement of
669	51-1046	Canopy control system; modification of
672	51-797	Change for installation of standby compass
673	61-700	Engine bleed air check valve, modification of
674	61-111	Aero-7A launcher improvements
679 S-1	61-588	Canopy mechanism; addition of viscous damper
680 S-1,Pt. III	61-377	Fuel transfer pump; modification of
680 Pt. I, II	61-377, 61-87	Fuel transfer pump; modification of
686	61-589	Main landing gear shrink link attach lug bushing, replacement of
695	61-628	Engine hose and tube support clamp cushion replacement of
696	61-137	Aft fuselage rearward towing provisions requirements; deletion of
734	61-699	Conventional weapons bomb rack adapters
6001	N129, 41-63	External fuel tanks change from CFE to GFE
6002	N348	MCL change, differential fuel pressure transmitter, deletion of
6007	N645	MCL change, fuse function control set, incorporation of AN/AWW-1
6014	41-825	Deletion of GFAE dual control kit
6015	41-794e	Instruments, alternate for BDHI
6017	51-224	MCL change - pylon fuel tanks (wing)
--	41-748	Horizontal situation indicator group from CFE to GFE

APPENDIX 2 (Cont)

ECP NO.	AUTHORIZATION (IBCC/CO. NO.)	TITLE OF CHANGE
--	41-749	Accelerometer ABU-r/A from CFE to GFE
6020, S-1	41-623, 61-122b, 51-1041	AN/APN-141 CFE to GFAE
6022, S-1	61-411a	Instruments, alternate for Bearing-Distance- Heading indicator
6029	51-923	Emergency generator; change from CFE to GFAE
6033	61-185	MCL change- addition of Sargent Fletcher 370 gallon tanks
6037	51-972	Oxygen gaging electronic control amplifiers; change from CFE to GFAE
6039	61-440	MCL - change of power supply for Sidewinder Missile Launcher
6040	51-779	MCL - Change of various equipment from CFE to GFAE
6046	51-1040	MCL - Change of AN/ARR-69 from CFE to GFAE

ADDENDUM NO. 1

TO

DETAIL SPECIFICATION

FOR

MODEL F-4(FVS) AIRPLANE

FOREWORD

This document and Detail Specification SD-513-2, Revised 10 August 1966 define the F-4(FVS) airplane with One-Way Data Link (AN/ASW-25A) and Single-Shot Radar (AN/AWG-10) (Mod) capabilities, with all other capabilities remaining unchanged.

The paragraphs of Detail Specification SD-513-2, Revised 10 August 1966 forms a part of this document, except as modified herein. Paragraphs of SD-513-2 which are superseded, in whole or part, are completely rewritten.

Paragraph numbers in this addendum correspond to the paragraph numbers of SD-513-2, except that the prefix letter A has been added for identification purposes.

Addendum No. 1 to
SD-513-2

A3.14 INSTRUMENTS AND NAVIGATIONAL EQUIPMENT.

A3.14.1 INSTRUMENTS. - Applicable, except delete MIL-I-18373 and substitute SR-74b(1).

(1) The following instrument installations shall be convenient to the pilot:

QTY	INSTRUMENT	QTY	INSTRUMENT
One	Wing Position Indicator (CFE)	Two	Approach Indexers (CFE)
One	Mach, Airspeed and Command (CFE)	One	Slat (LE) Position Indicator (CFE)
One	Radar Altimeter (GFAE)	One	Optical Display (CFE)
One	Accelerometer ABU-4A (GFAE)	Two	Exhaust Gas Temp. Indicator (GFAE)
One	AAU-19/A Servoed Altimeter (GFAE)	One	Vertical Velocity Indicator (GFAE)
One	Clock (GFAE)	One	True Airspeed Indicator (CFE)
Two	Tachometer Indicators (GFAE)	One	Fuel Quantity Indicator (CFE)
Two	Fuel Flow Indicator (CFE)	One	Remote Radio Channel Indicator (GFAE)
Three	Landing Gear Position Indicator (CFE)	Three	Fuel Transfer Indicator Lights (CFE)
One	Angle of Attack Indicator (CFE)	One	Attitude-Director Indicator (GFAE)
Two	Nozzle Position Indicator (CFE)	One	Horizontal Situation Indicator (GFAE)
One	Fuel Boost Pressure Indicator (GFAE)	One	Liquid Oxygen Indicator (CFE)
One	Two-Inch Attitude Indicator (GFAE)	One	Compass Standby, MB-1 (GFAE)
One	Radar Warning Indicator (CFE)	One	Cabin Pressure Altitude Indicator (GFAE)
One	Flap (TE) Position Indicator (CFE)	Two	Oil Pressure Indicator (GFAE)
One	Pneumatic Pressure Gage (CFE)	One	Wing Trim Position Indicator (CFE)
Three	Hydraulic Pressure Indicator (GFAE)	One	Discrete Word Indicator (CFE)
One	Rudder Position Indicator (CFE)	One	Message Indicator (CFE)
One	Trim Position Indicator (Stabilator) (CFE)		
One	Azimuth, Elevation, Range Indicator (GFAE)		

(2) The following instrument installation shall be convenient to the radar intercept officer.

QTY	INSTRUMENT
One	Indicator Airspeed and Mach Number (GFAE)
One	AAU-19/A Servoed Altimeter (GFAE)
One	Clock Elapsed Time (GFAE)
One	Command Altitude Indicator (CFE)
One	True Airspeed Indicator (CFE)
One	Two-inch Remote Attitude Indicator (GFAE)
One	Bearing - Distance Heading Indicator (GFAE)

Addendum No. 1 to
SD-513-2

A3.14.1 (Continued)

QTY	INSTRUMENT
One	Cabin Pressure Indicator (GFAE)
One	Liquid Oxygen Indicator (CFE)
One	Tactical Situation Display Indicator (GFAE)
One	Discrete Word Indicator (CFE)

A3.17.2.1(2) Digital Data Communications Set (AN/ASW-25A) which shall consist of the following:

(a) CV( )/ASW-25A, Digital Data Converter-Receiver
(b) C( )/ASW-25A, Communications Set Control

See A3.17.2.2.4 for complete system definition.

Spec MIL-D-81124(WP)
Installation: Specs MIL-I-8700, MIL-W-5088A, and MIL-I-6051.
Testing: Specs to be prepared by the contractor and approved by NAVAIRSYSCOM or NAVPLANTREPO

A3.17.2.2.1 INERTIAL NAVIGATION/DIGITAL BOMBING SYSTEM (INDBS). - An INDBS which provides the basic navigation, air-to-surface weaponry, and an attitude reference shall be provided. The system shall feature an improved alignment capability which eliminates the necessity of transporting peripheral instrumentation to the aircraft. The system shall be capable of being hand-carried and manually inserted in the aircraft while it is operating in the navigate mode. The system shall feature a navigation accuracy of one nautical mile per hour and it shall provide instantaneous aircraft present position latitude and longitude anywhere over the earth including the polar regions. The INDBS shall provide a continuous basic all-attitude reference to associated electronic equipment for indicator and stabilization purposes. The INDBS shall provide a digital bombing capability which employs the Lead Computing Optical Sight and the air-to-ground ranging mode of the AN/AWG-10 radar system. The INDBS provides the basic digital ballistics computation and provides for weapon release. The INDBS provides range and bearing to any one of eight selected destinations. A Built-In-Test (BIT) shall be incorporated into the INDBS and it shall provide a self-test indication in the aft cockpit as a GO or NO-GO condition. The entire BIT procedure shall be performed within the cockpit. The INDBS shall operate in conjunction with the following associated equipment.

(a) Heading and Attitude Reference Set
(b) Central Air Data Computer (CADC)
(c) Bearing-Distance-Heading Indicator
(d) Horizontal Situation Indicator
(e) Airborne Weapon Control System (AN/AWG-10(Mod))
(f) Lead Computing Optical Sight System (AN/ASG-22(Mod))

A3.17.2.2.4 DIGITAL DATA COMMUNICATION SYSTEM (DDCS) AN/ASW-25A. - A DDCS shall be installed and/or provided for a one-way (receive) digital communications link for manual or automatic control of the aircraft in vector, traffic control, automatic carrier landing, and precision course direction phases of a mission and shall function as an airborne terminal of the AN/USC-2 data link working in conjunction with the appropriate control facility as follows:

(a) During a vector-to-intercept mission, the AN/ASW-25A data link shall receive commanding heading, speed, altitude, and target information to assist the flight crew in achieving an intercept.

(b) During a traffic control phase, the AN/ASW-25A data link shall receive command heading, speed, and altitude information for an optimum entry into the base traffic pattern.

(c) During an automatic carrier landing, the AN/ASW-25A shall provide either manual or automatic steering information, relative to a predetermined glide slope, for an optimum approach and landing. The glide slope error is displayed continuously on the ADI cross pointers.

(d) During a precision course direction phase, the data link provides an automatic, precision, tactical bombing capability under a wide range of altitude, armament, and weather conditions. Heading and altitude command signals are coupled to the autopilot and bombing course error signals and are displayed on the ADI. An automatic bomb-release feature is provided. At the option of the pilot, a fully manual bombing run may be accomplished.

A3.17.2.2.4.1 AIRPLANE COMPONENTS. - The following components shall be installed and/or provided to constitute the airborne terminal (AN/ASW-25A) of the AN/USC-2 data link system:

(a) CV ( )/ASW-25A (GFAE)
(b) C ( )/ASW-25A (GFAE)
(c) Discrete Word Indicator (CFE)
(d) Message Indicator (CFE)
(e) Decode/Display Coupler (CFE)
(f) Command Altitude Indicator (CFE)
(g) Ka-Band Beacon (CFE)

The AN/ASW-25A shall operate in conjunction with the following equipment:

(1) Central Air Data Computer (CADC)
(2) Automatic Flight Control System (AFCS)
(3) Communications Navigation Identification (CNI)
(4) Heading and Attitude Reference Set
(5) X-Band Radar Beacon (AN/APN-154)

Addendum No. 1 to
SD-513-2

A3.17.2.2.5 HEADING AND ATTITUDE REFERENCE SET. - The Heading and Attitude Reference Set shall have an all-attitude capability of providing a continuous basic attitude reference. The Heading and Attitude Reference Set shall consist of the following:

(a) Compass System Controller
(b) Electronic Control Amplifier
(c) Compass Transmitter
(d) Displacement Gyroscope

The Heading and Attitude Reference Set shall operate in conjunction with the following associated equipment:

(1) Inertial Navigation/Digital Bombing System
(2) Flight Control Group
(3) Flight Director Computer
(4) Communication Navigation Identification (CNI)
(5) Airborne Weapon Control System (AN/AWG-10 (Mod))
(6) Lead Computing Optical Sight Set (AN/ASG-22 (Mod))
(7) Data Link (AN/ASW-25A)

A3.17.9(B) Delete 3.17.9(B) of the Detail Specification.

A3.18.8.3.1 MISSILE CONTROL SYSTEM (MCS) AN/AWG-10 (Mod). - An AN/AWG-10 (Mod) shall be installed. The MCS shall provide information to only one Sparrow missile in flight at any one time. The MCS shall provide a coherent pulse-doppler mode as well as a pulse mode. The MCS shall provide launch zone computation, guidance, and control of Sparrow (AIM-7D/E/F/F(Mod) missiles; launch zone computation of Sidewinder (AIM-9B/D) missiles. The MCS shall provide lookdown and co-altitude air-to-air capability to detect and track airborne targets. The MCS shall provide air-to-ground capability for ground mapping, terrain clearance, and air-to-ground ranging. Resistance to electronic and passive countermeasures shall be provided. The MCS shall consist of:

(a) AN/APG-59 (Mod) Radar Set - Based on the design requirements of Spec MIL-R-81114 (Mod) reviewed by McDonnell and as changed, corrected, and agreed to by McDonnell and the procuring activity.

(b) OA-6822/AWG-10 Missile Control Group - Based on the design requirements of Spec MIL-M-81208(Wep).

A3.18.8.3.2 Delete 3.18.8.3.2 through 3.18.8.3.2.1.3 of the Detail Specification.

Addendum No. 1 to
SD-513-2

APPENDIX 1

Master Configuration Lists (MCL) of Detail Specification, SD-513-2, Revised 10 August 1966 shall apply, except as modified herein.

APPROVED

MASTER CONFIGURATION LIST

FOR OFFICIAL USE ONLY

Model Designation F-4(FVS)

Fiscal Year Date

Page Number 6 Change Number BASIC Detail Specification Number SD-513-2, Addendum No. 1

Comp Code	Item Number	Nomenclature	Specification Number	Drawing Number	Effectivity	Units Per	Type Inst	Weight	Inst Ld Tm	Cog
	301	AN/AWG-10 RADAR SET (MOD)			1-	1	A			
	301-01	AN/APG-59 RADAR SET (SINGLE SHOT) (MOD)			1-	1	A			
	301-02	OA-6822/AWG-10 MISSILE CONTROL GROUP			1-	1	A			
	302	AN/ASW-25A DATA LINK SET			1-	1	A			
	302-01	CV-( )/ASW-25A DIGITAL DATA CONVERTER-RECEIVER			1-	1	A	14.0		
	302-02	C-( )/ASW-25A DIGITAL DATA COMMUNICATIONS SET CONTROL			1-	1	A	1.0		
	304	AN/APN-154 X-BAND BEACON			1-	1	A	5.7		

EXPLANATIONS

EXPLANATIONS