PRESENTATION OF THE DONBASS STATE ENGINEERING ACADEMY (DSEA) KRAMATORSK, UKRAINE

25 April 2019

Oleksandr Tarasov, Prof., Doctor of Sciences,
Head of Computer and Information Technology Department
Eduard Grybkov, Doctor of Sciences, Oleksandr Altukhov, PhD

Donbass State Engineering Academy (DSEA) is a higher educational establishment of the IVth accreditation level training Bachelors and Masters of Science by full-time and part-time curriculum, including retraining of specialists.

The DSEA runs postgraduate and doctorate courses

Cooperation with the leading Ukrainian manufacturing enterprises in Kramatorsk

NKMZ

Fuhrländer
ВІНДТЕХНОЛОДЖІ

K3TC

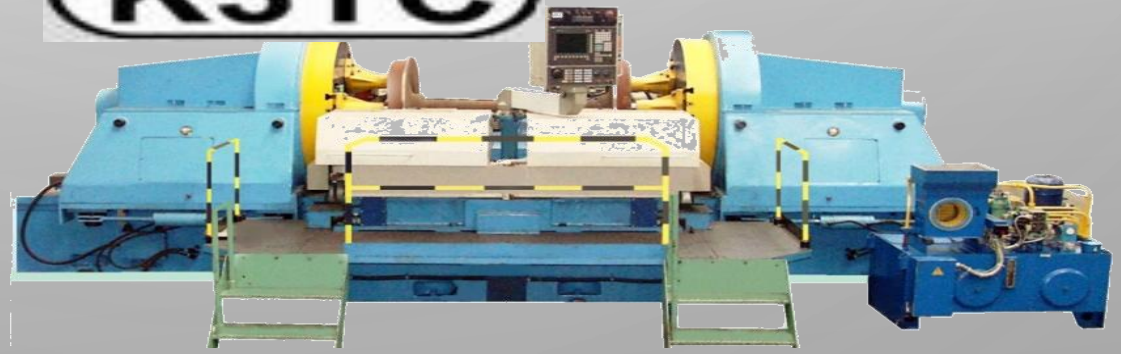

Key research areas:

- Development processes and machines for plastic deformation, impact and pressure forming, rolling mill
- Cast iron manufacture
- Technology of metalworking, heat treatment and welding
- Creation of different equipment
- CAD/CAM/CAE-systems research and software integration
- Creation of embedded systems based on automation equipment of foreign and domestic firms

Key research areas in the field of metal forming

- 1 Development and improvement of equipment for the processes of metal forming and SPD.
- 2 Designing new and improving known SDD processes for compact and non-compact materials.
- 3 Development of software integrated with CAD/ CAE systems. Automation of the creation of computational models and optimization of technological processes for SPD, including combined ones.
- 4 Development of models and software for image recognition of the microstructures of materials.

Development of new processes of severe plastic deformation`

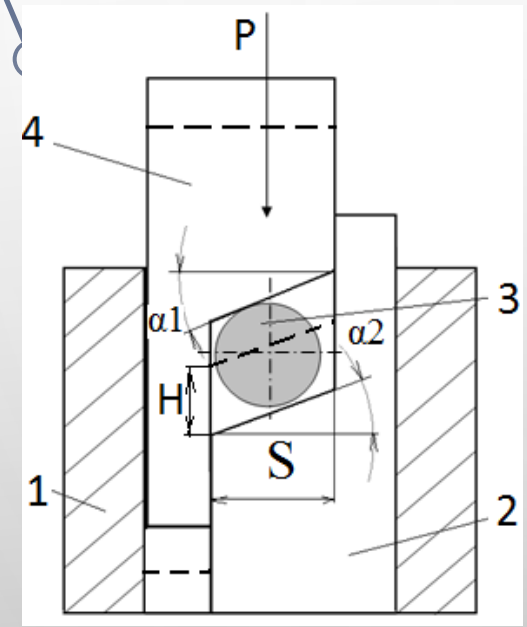

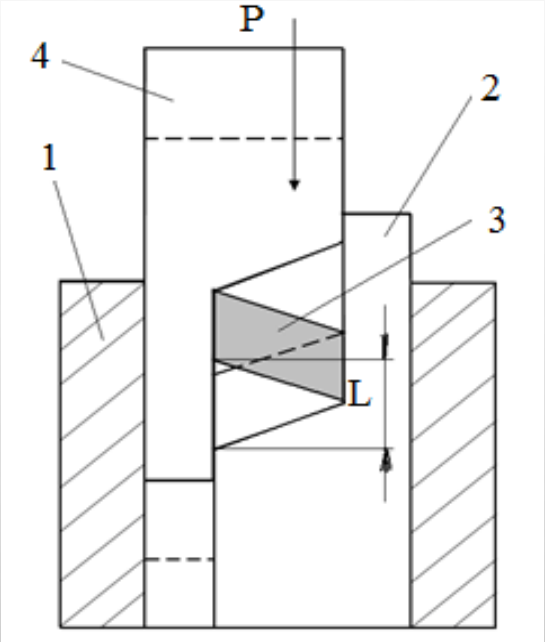

PC180

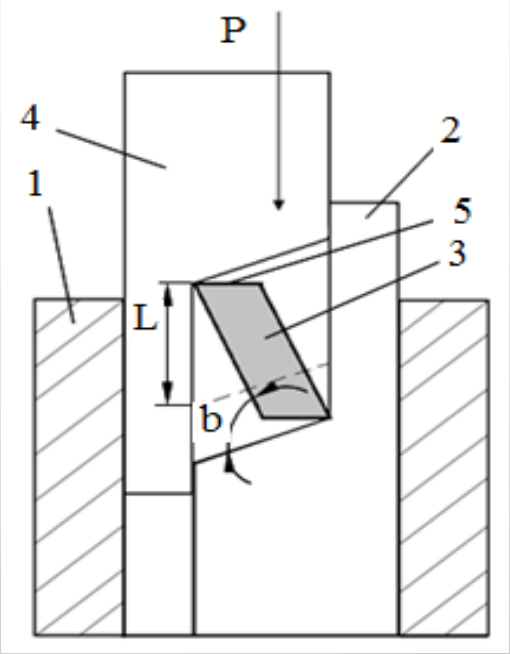

PC60

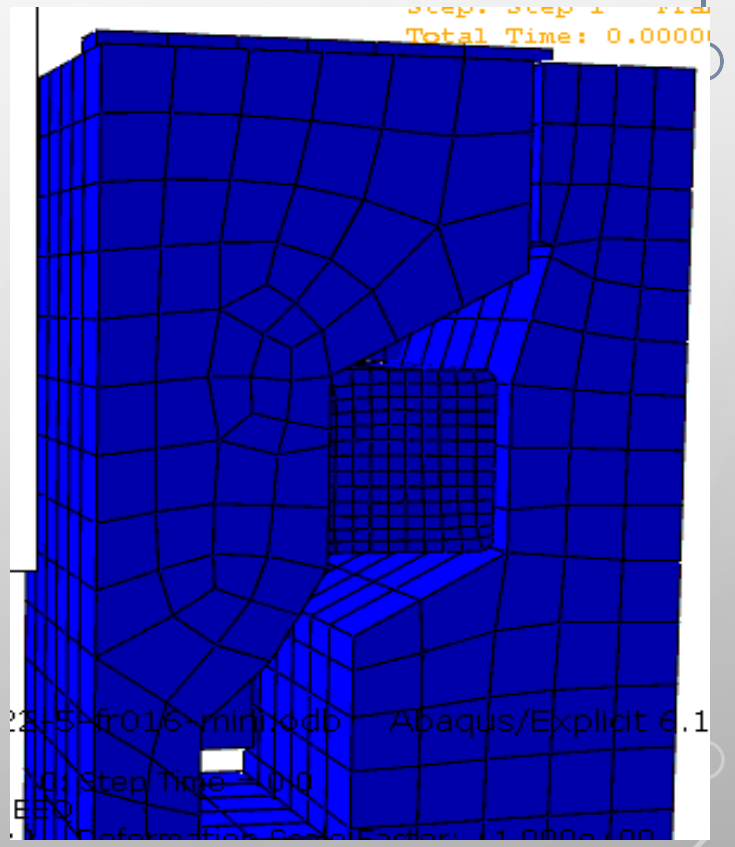

- New process of repeated severe (SPD) plastic deformation of the workpiece with the change of direction of deformation – “Reversible shear”

Automated rotation of the workpiece to increase productivity

Study of proposed process for SPD “Reversible shear”

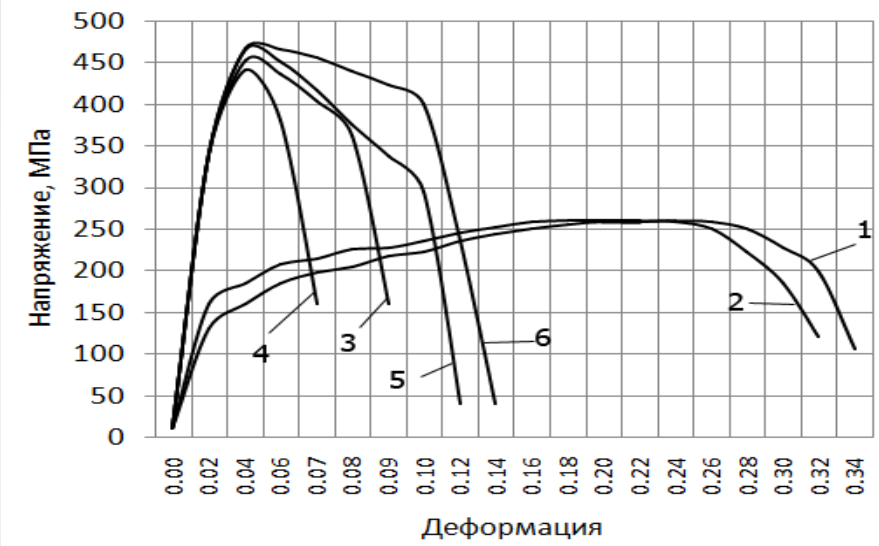

- Dependences of σ (ε) for samples from copper:
- 1,2 - the initial state;
- 3-6 deformed according to the PC scheme

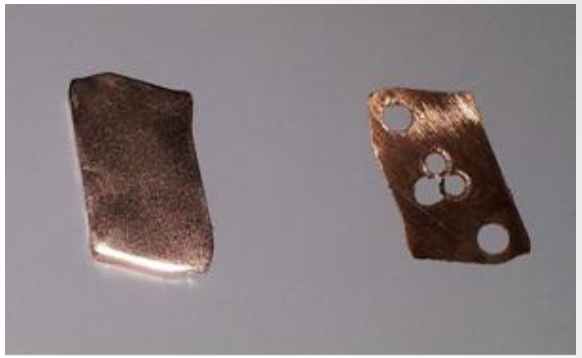

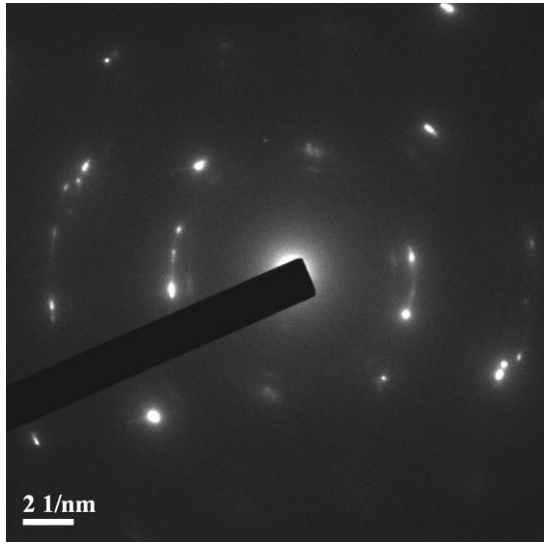

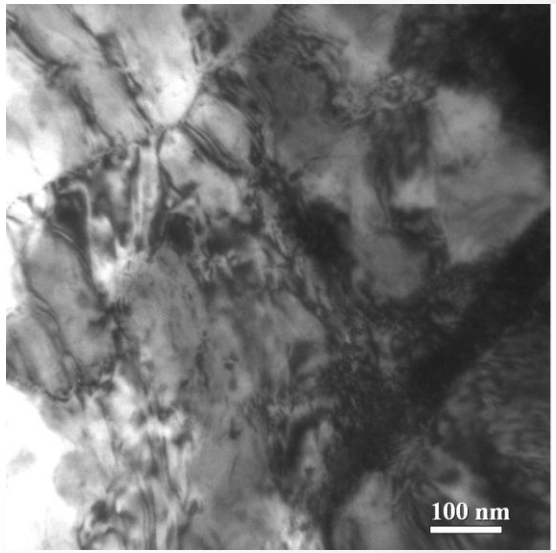

- Grain size 300-500 nm
- JEM 2100F (IPM NASU)

Development of equipment for high-pressure torsion process (HPT)

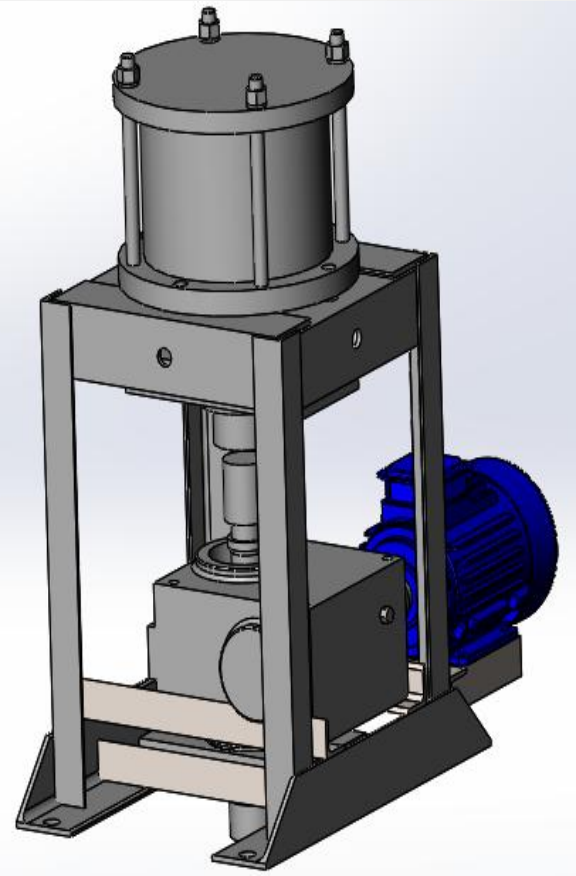

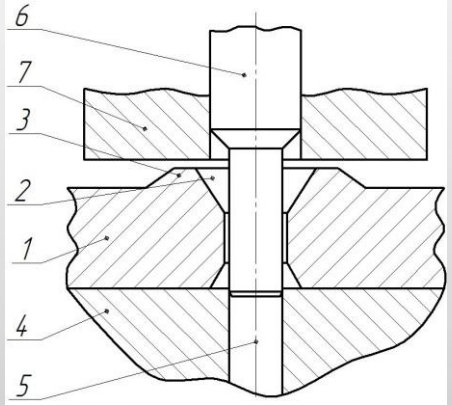

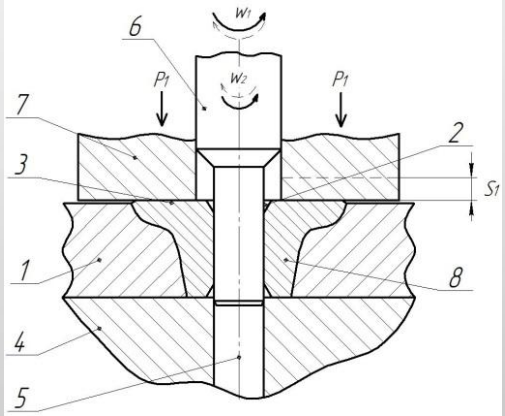

- HARDENING HOLES BASED ON HPT PROCESS AFTER 3D- PRINTING

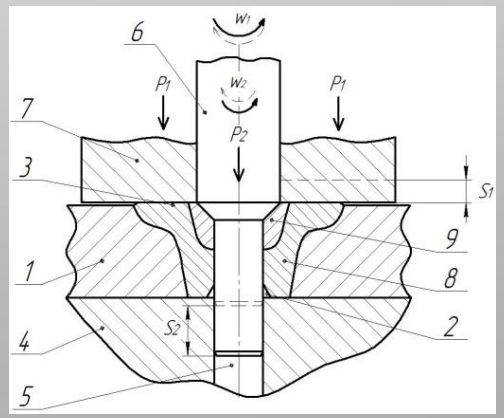

Groups of combined processes, metal forming (MF) and SPD

- Combining the SDI methods to increase the uniformity of the distribution of deformations over the volume of the workpiece
- Combination of SDI methods and classical Metal Forming operations for expansion of the assortment of received blanks
- Local hardening by SPD methods of blanks obtained from powder materials by powder metallurgy methods or additive technologies

Combined processing of SPD + MF: screw extrusion + rolling

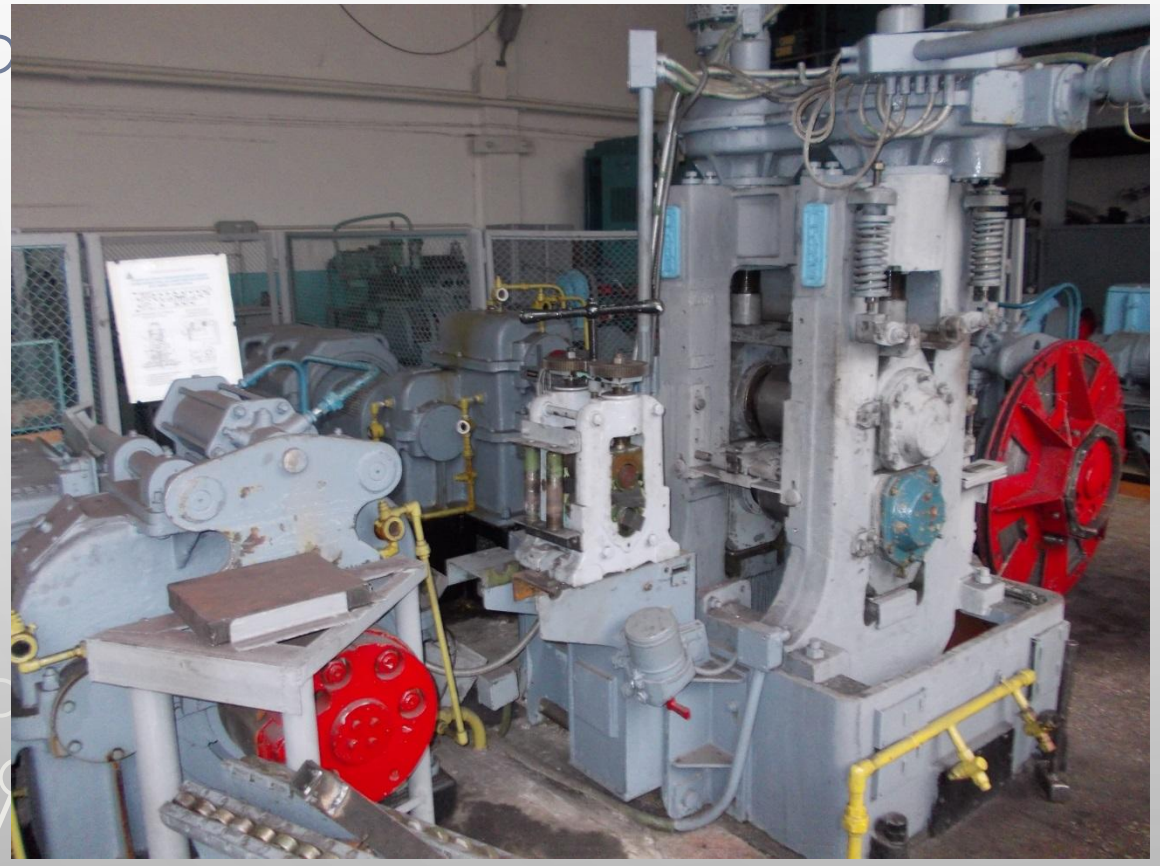

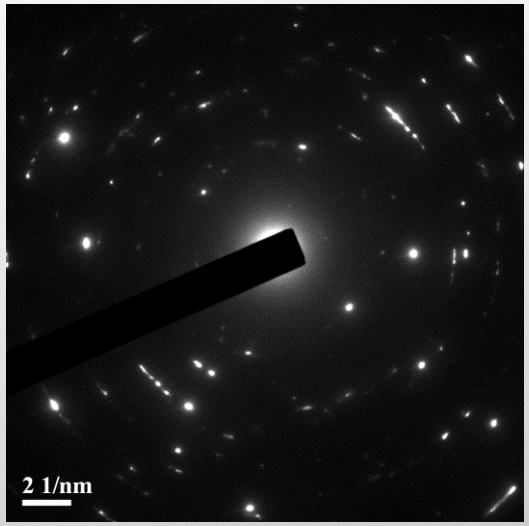

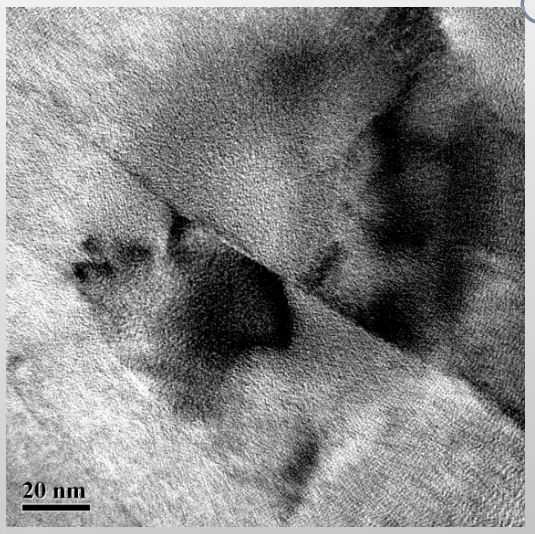

Rolling blanks from BT1-0 on the mill 200 (DSEA) with temperature control

Samples after rolling along to H = 2.2 mm and across H=1,5…1,2 mm, B=26…33 mm, L=52 mm

Cooperation with the National Academy of Sciences of Ukraine

- Donetsk institute for physics and engineering National Academy of Sciences of Ukraine
- Institute for problems of material sciences NAS of Ukraine
- Sytenko Institute of Spine and Joint Pathology of National Academy of Medical Sciences of Ukraine

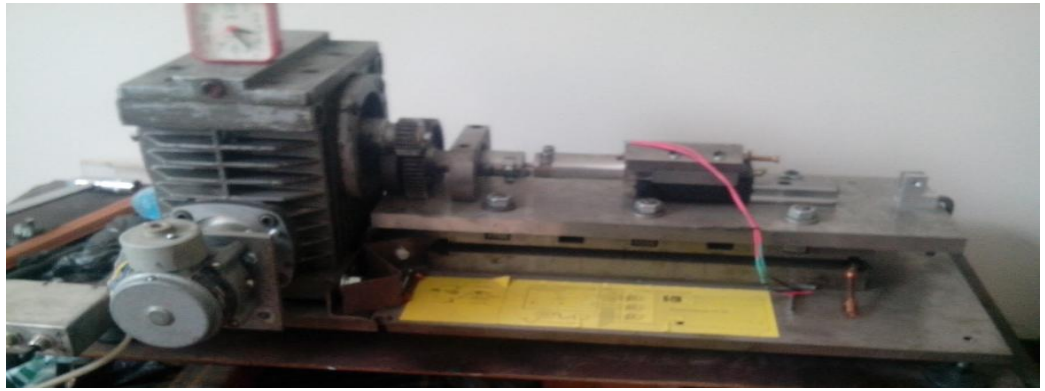

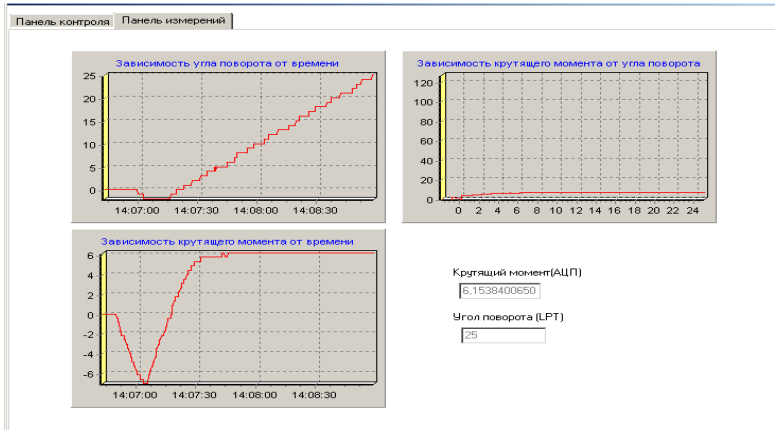

Development of new technologies, testing equipment's and tooling

Experimental equipment for screw extrusion (DonPhTI and DSEA)

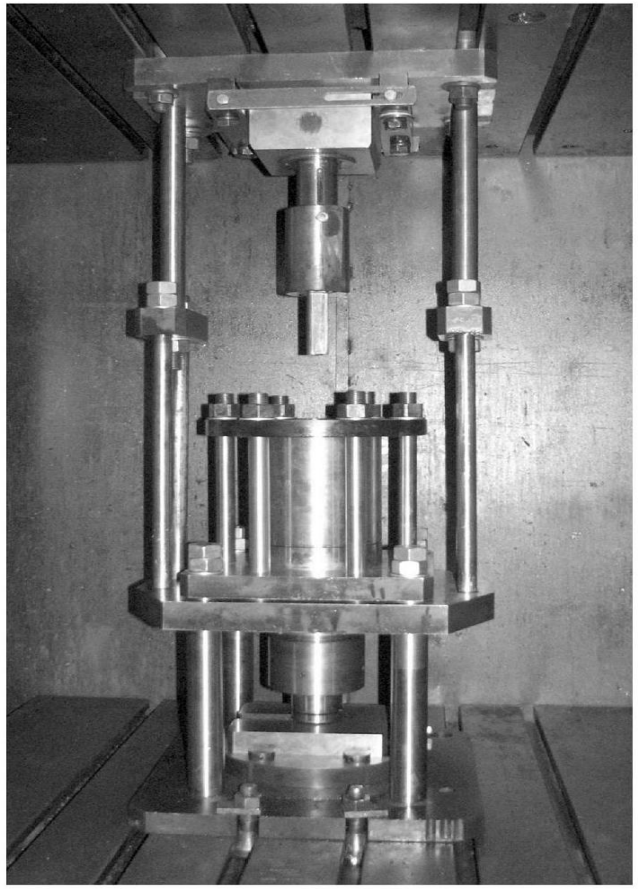

Experimental equipment for screw extrusion

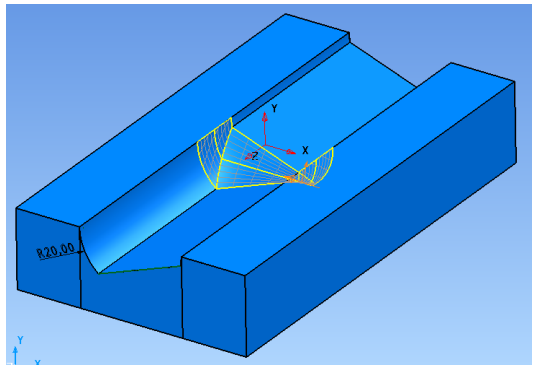

Split die for screw extrusion

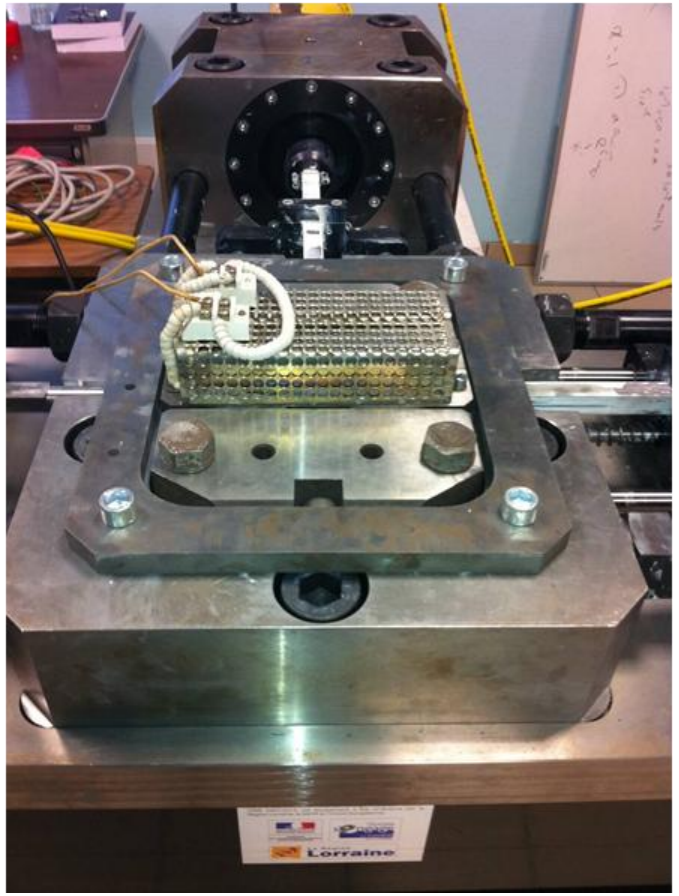

Equipment for screw extrusion

Screw extrusion installation for MotorSich (DSEA, DonPhTI, ZNTU, MotorSich)

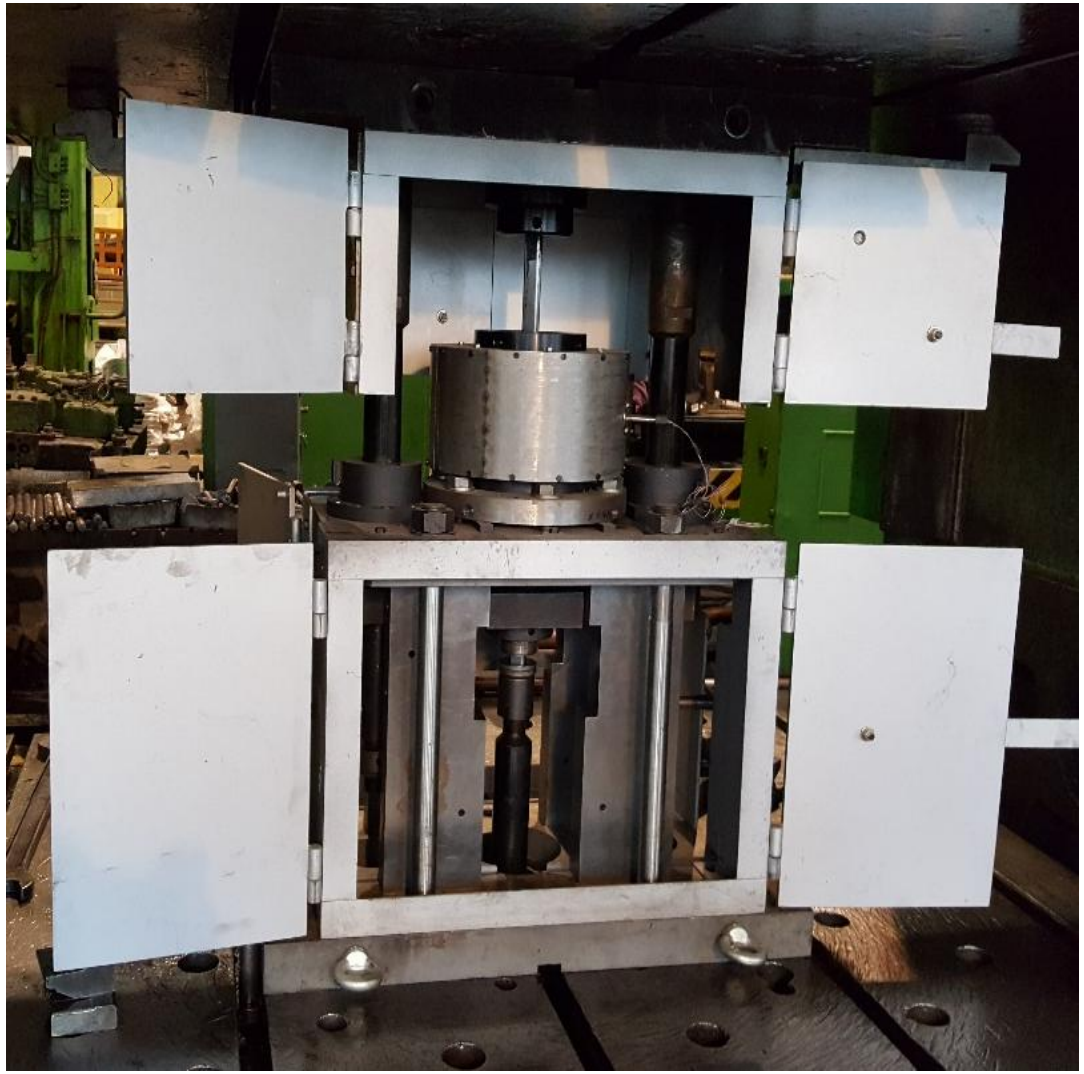

CAD components of the processes of severe plastic deformation (SPD) on the basis of integration with industrial CAD/CAE systems

The structure of integrated CAD on the basis of industrial CAD/CAE systems using API-interfaces is developed

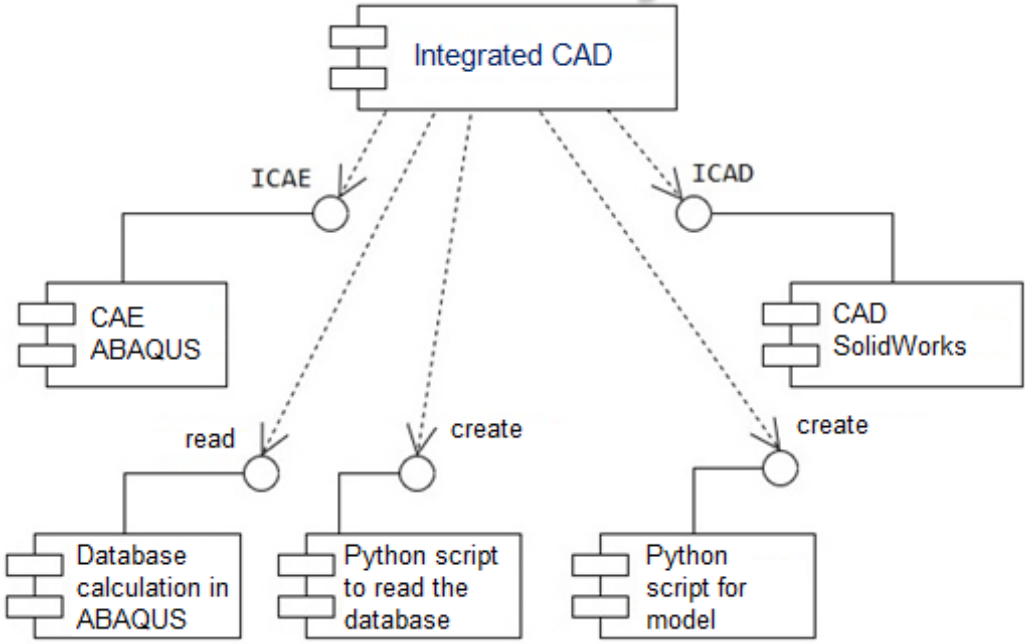

Results of validation of modeling adequacy in CAE-system

For integrated CAD SPD processes, Python modules have been developed to build parametric models of the deformation process in the CAE-system

```
mdb.models[modelName].Material(name='Material-Titan')
mdb.models[modelName].materials['Material-Titan'].Density(
    temperatureDependency=ON, table=((4.5e-06, 400.0), ))
mdb.models[modelName].materials['Material-Titan'].Elastic(
    temperatureDependency=ON, table=((112000.0, 0.32, 400.0), ))
mdb.models[modelName].materials['Material-Titan'].Plastic(
    temperatureDependency=ON, table=((1.0, 0.0, 400.0), (75.0, 0.1, 400.0),
    (125.0, 0.2, 400.0), (140.0, 0.3, 400.0), (160.0, 0.4, 400.0), (165.0,
    0.5, 400.0), (167.0, 0.6, 400.0), (175.0, 1.0, 400.0)))
mdb.models[modelName].Material(name='Stal140XN')
mdb.models[modelName].materials['Stal140XN'].Density(
    temperatureDependency=ON, table=((7.85e-06, 350.0), ))
mdb.models[modelName].materials['Stal140XN'].Elastic(
    temperatureDependency=ON, table=((200000.0, 0.3, 350.0), ))
mdb.models[modelName].materials['Stal140XN'].Plastic(
    temperatureDependency=ON, table=((1600.0, 0.0, 350.0), ))
mdb.models[modelName].HomogeneousSolidSection(name='piece',
    material='Material-Titan', thickness=None)
mdb.models[modelName].HomogeneousSolidSection(name='tool',
    material='Stal140XN', thickness=None)
```

Processing of images of microstructure of materials

The method of network analysis of the image using color binarization is developed and implemented.

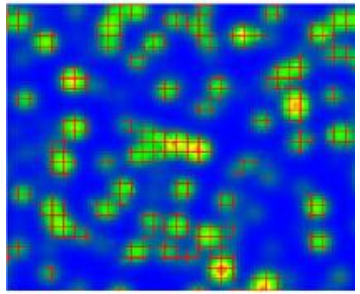

A clustering method based on a clear distance is developed and implemented.

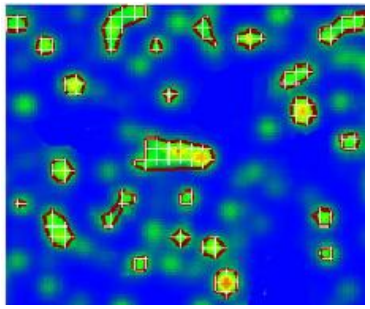

The method of constructing concave contours is developed and implemented.

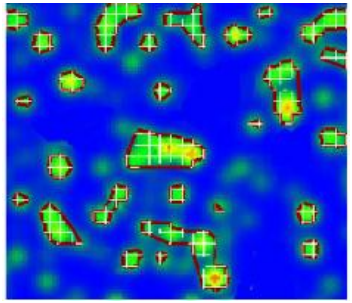

The program-methodical complex for automation of image processing with the obtaining of quantitative results of analysis of selected areas was developed and implemented.

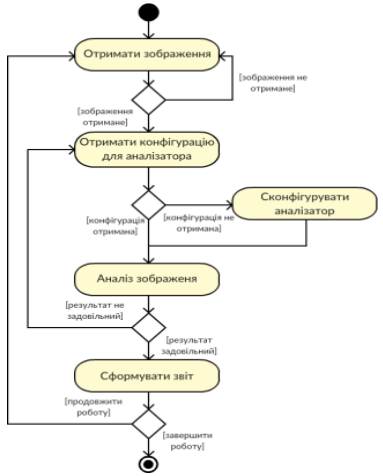

The result of the method of calculating the quantitative characteristics of the clusters (the angle between the cluster and axis, etc.).

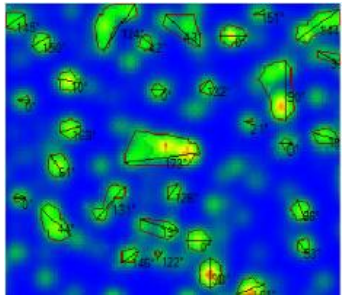

Visualize the image in 3D space

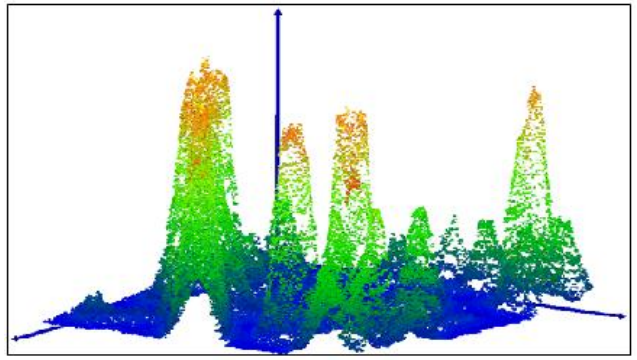

Image binarization and grain contouring

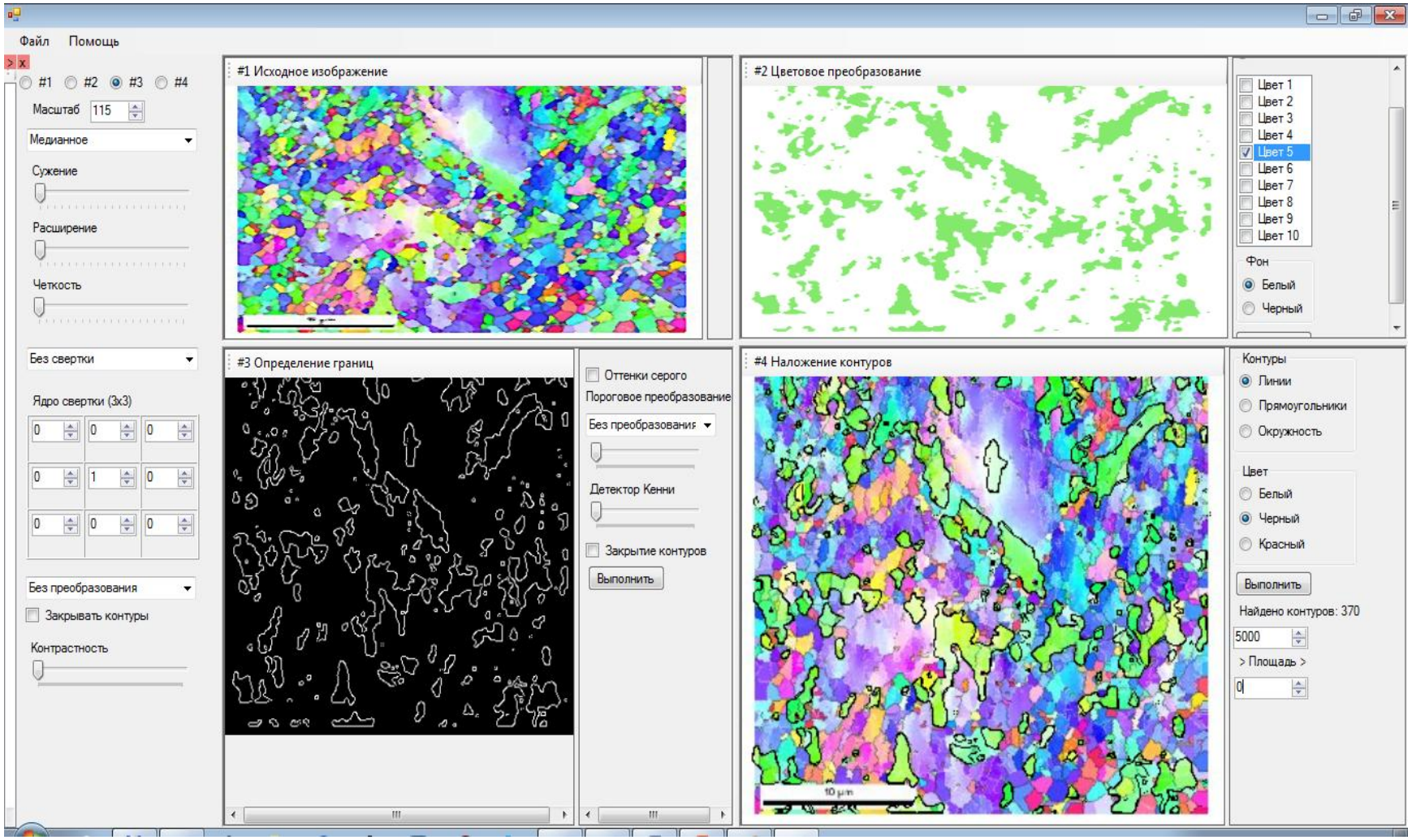

Thank You
for Your Attention

CONTACT INFORMATION

Oleksandr Tarasov, Prof., Doctor of Technical Sciences,

Head of the Computer and Information Technology Department, DSEA

Tel. +380626418655 Fax. +380626416315 Mob. +3805047226616

kit@dgma.donetsk.ua, alexandrtar50@gmail.com