Pipeline Monitoring in Alpine Terrain - Special Challenges for Leak Detections Pigs

By Joachim Klein, Key Account Manager, Gottsberg Leak Detection GmbH & Co. KG

Pipelines are, in many ways, the lifelines of modern society. Almost every aspect of life still relies on liquids and gas in some way, and ensuring the delivery of oil, gas and other products depends on an efficient pipeline network. Alongside avoiding supply disruptions that can lead to economic losses, protecting the environment is a top priority in pipeline operations.

In the event of a pipeline leak, it is not just the spilled liquid that poses a challenge but also the associated costs of disposing of it and cleaning up the contaminated soil over a large area. After locating the leak, the pipeline must be repaired, and the cleanup operation completed. Furthermore, the operator risks damage to their reputation, which can negatively affect societal acceptance of pipeline projects.

Leak detection is an essential component of pipeline risk management as it allows the operator to respond in time to the leaks to prevent further escalation of incidents. The scope includes leak detection for pipelines conveying various flowing fluids - gas, liquid, and multiphase flow. Pipeline environments include subsea and onshore. The higher the risk posed by the pipeline, the more sophisticated and important leak detection systems should be.

Pipeline routes pass through different countries, jurisdictions and cultures and knowledge of each is vital when facing the difficulties caused by a major incident.

With that in mind, operators need to address the question of which technology combinations optimize pipeline safety and what has been done to protect the pipeline from any potential risk.

Various methods exist to ensure the safety of these transit routes. One essential tool is the use of intelligent PIGs (Pipeline Inspection Gauges) for leak detection. While online systems provide continuous monitoring through mathematical modeling and external parameter measurements, they struggle to detect minor leaks as small as a few liters per hour.



In contrast, PIGs can record precise data at every point along the pipeline. Gottsberg Leak Detection from Germany has developed a highly accurate leak detection system based on ultrasonic technology. Passive acoustic sensor technology provides the means to create an acoustic image of the pipeline. All noises during the run are recorded by the tool. Passive leak detection technology can distinguish high frequency noises caused by imploding vapor cavities formed in a liquid by rapid changes in the pressure. This means even the smallest pinhole Leaks can been detected.

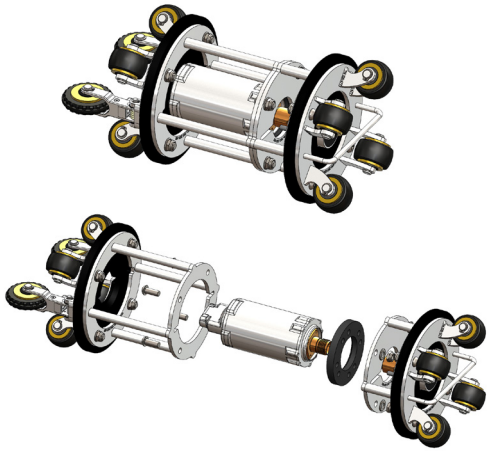

This system records data during normal pipeline operations, which is later analyzed by the specialist.

Unlike other pigging services, this system is easy to install and operate. Certified for use in Ex Zone 0 by TÜV Nord, the device can be used during normal pipeline operations without requiring a shutdown. It performs inspections unaffected by variations in pressure, speed, or flow rate, providing exceptional reliability.

Additionally, the system minimizes false alarms by using precise frequency analysis. This ensures that noises, such as those for example produced by construction work near the pipeline, are correctly identified and not mistakenly flagged as leaks.

In Germany the operation of leak detection systems is regulated by the TRFL (Technical Rules for Pipelines). Even though it is a national standard, it has international acceptance as for example API1175 recommendations follow the TRFL.

In March 2024 an updated version has been issued, including a modification of all relevant leak detection paragraphs, originally intended only for application within the German federal territory. All regulations should

normally be well known to pipeline operators, especially in Europe.

Challenges of Mountainous Terrain

In flat terrain, pipeline operators face fewer challenges during both construction and operation. However, when pipelines traverse mountainous regions like the Alps, new and complex challenges arise.

These challenges begin during the construction phase, with questions such as, "Should the pipeline cross over the mountain or pass through a tunnel to avoid steep altitude changes?" And, "How much energy is required to overcome the mountain range?" These considerations also play a significant role during operation and maintenance.

For instance, steep inclines demand significant energy, while sharp descents can cause the transported medium (and the PIGs within the pipeline) to accelerate nearly to free-fall speeds. To address these issues, Gottsberg Leak Detection, in collaboration with TAL (Transalpine Pipeline), developed a new generation of PIGs designed to meet the demands of the Alpine terrain.

The transalpine pipeline stretches from the oil port in Trieste, Italy, to refineries in Germany and Austria, crossing elevation differences exceeding 2,000 meters. In certain sections, steep descents create nearly free-fall conditions, making the durability of the PIG and its carrier critical. This required the development of entirely new structures and extensive simulations to ensure both the safety of the pipeline, and the accuracy of the data recorded.

Dummy PIGs were used in test runs, allowing for numerous modifications to be made before regular operations commenced. These changes included reinforced carriers and upgraded odometer devices to reliably measure speed and distance.



Innovative Solutions and Added Benefits

Despite the extreme conditions, the PIGs reliably deliver critical data. They can detect leaks as small as 6.8 liters per hour with a minimum detectable leak size: 0,2mm —an achievement previously unattainable.

The system also provides insights into pipeline conditions, such as wax buildup, contamination levels, and improperly functioning valves, which can produce distinctive noise signatures.

This additional data offers operators significant value, as it not only ensures leak-tightness but also identifies opportunities for energy efficiency in pipeline operations, ultimately reducing costs. Furthermore, the PIGs record parameters like temperature, pressure, and distance, which can enhance the accuracy of online monitoring systems, such as SCADA systems, by integrating these detailed measurements.



Thanks to a data compression rate of approximately 1:300, the PIGs can store up to 300 hours of data on a compact, energy-efficient 1GB memory card. Despite this high level of compression, no essential information is lost, ensuring precise leak detection and comprehensive analysis.

The engineers at Gottsberg Leak Detection have successfully overcome the challenges of the Alpine terrain. Their PIGs have completed more than a decade of inspections runs between Trieste and Ingolstadt, ensuring the continued safety and efficiency of the transalpine pipeline.

There is no one technology for leak detection that covers all areas, but a decisive advantage can be gained by combining different technologies. When it comes to detecting pinhole leaks and their precise location, Gottsberg Leak Detection's technology certainly has the potential to be a game changer.

If you would like to know more about the topics discussed in this article, please contact:

Gottsberg Leak Detection GmbH & Co. KG

Joachim Klein

Am Knick 20, 22113 Oststeinbek.

Germany

Phone +49 40 71486697

Mobile +49 176 10004906

klein@leak-detection.de

www.leak-detection.de

