VITO VL
Spec sheet

VITO oil filter system
MADE IN GERMANY

Functionality:

VITO VL cleans your oil in an easy and hygienic way. VITO is placed in the hot oil and filters the oil from suspended particles and bitter substances without supervision. After the set time (standard 4,5 min) VITO stops automatically and your oil is ready to be used. VITO is integrated into the VITOconnect system environment. VITOconnect gives you an online overview of productivity, services and updates.

Features:

- For all fryers from 20 l (medium to heavy sediment)
- Pressure flow filtration
- Automatic filtration - VITO stops after the adjustable time
- Automatic safety off - VITO has integrated tilt-switch & heat protection
- Up to 16 filtration cycles in a row to filter multiple fryers
- VITO made out of stainless steel (1.4301) and other food safe materials
- Pump-filter unit and drip pan can be cleaned in dishwasher
- Network connection (WiFi)
- Cable holder with snap button
- Acoustic and visual signals

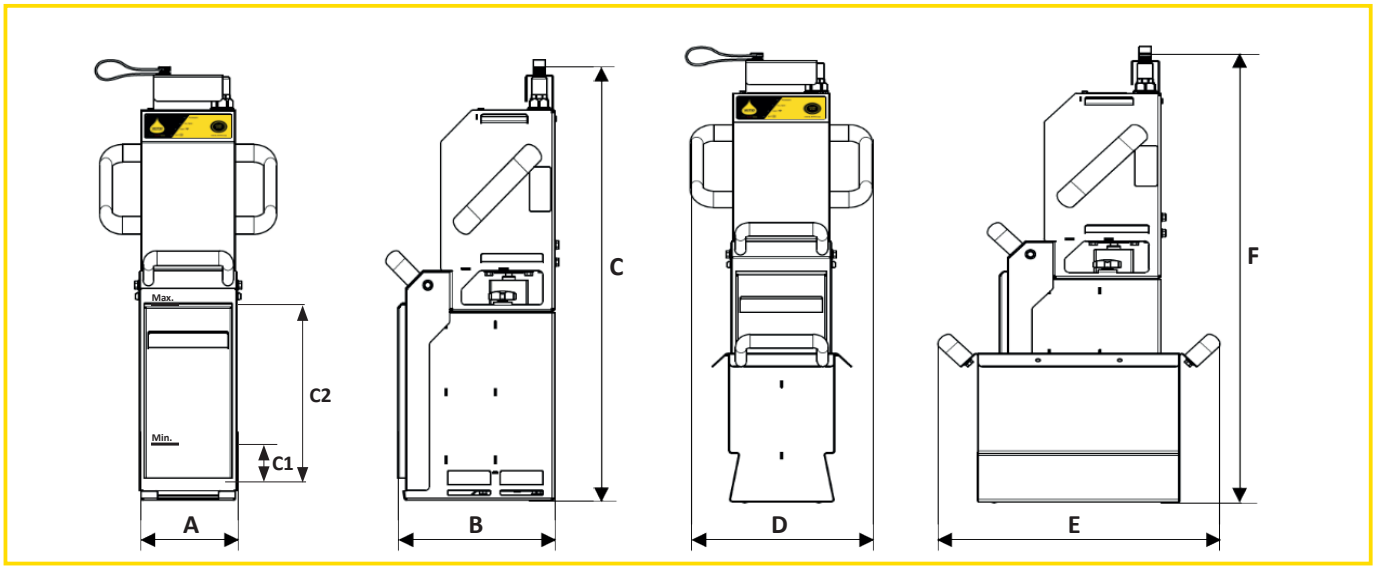

VITO VL technical Data:

Width A	Depth B	Height C	Immersion depth Min C1	Immersion depth Max C2		Width D	Depth E	Height F
116 mm	187 mm	502 mm	45 mm	205 mm		210 mm	324 mm	565 mm
Filtration power	**Filtration efficiency**	**Particle capacity**	**Work cycle**	**Suction depth**	**Max. power**	**Power connection**	**Fuse inside**	**Protection**
up to 100 l/min	5 µm effective/ 20 µm nominal	2,5 kg* (3 l)	4,5 min (adjustable)	~45 cm	500 W	220 - 240 V, 50-60Hz, single phase	4 AT	Protection Earth (PE)
WiFi	**Total weight**	**Weight**	**Temperature**	**Material**				
2.4 GHz	10,5 kg (with drip pan)	8,8 kg (without drip pan)	max. 200 °C	Stainless steel 1.4301				

*regular bread crumbs

Extensions & Accessories:

- Access to https://connect.vito.ag
- Brackets to accommodate all fryer types
- Particle filters

made in Germany

SANITATION NSF/ANSI 4

VITO AG
P: +49 7461 96289-0
info@vito.ag / www.VITO.ag