EO 05-25A-1

ROYAL CANADIAN AIR FORCE

PILOTS OPERATING INSTRUCTIONS

LANCASTER

"REVISION" NOTICE

LATEST REVISED PAGES SUPERSEDE THE SAME PAGES OF PREVIOUS DATE

Insert revised pages into basic publication. Destroy superseded pages.

ISSUED ON AUTHORITY OF THE CHIEF OF THE AIR STAFF

10 JUN 53

Revised 27 Apr 55

LIST OF RCAF REVISIONS

DATE	PAGE NO	DATE	PAGE NO
27 Apr 55	V		
27 Apr 55	Viii		
27 Apr 55	5		
27 Apr 55	6		
27 Apr 55	7		
27 Apr 55	9		
27 Apr 55	10		
27 Apr 55	14		
27 Apr 55	15		
27 Apr 55	17		
27 Apr 55	18		
27 Apr 55	19		
27 Apr 55	21		
27 Apr 55	23		
27 Apr 55	24		
27 Apr 55	25		
27 Apr 55	27		
27 Apr 55	28		
27 Apr 55	31		

NOTES TO USERS

1 This publication is divided into four parts: Description, Handling, Emergency Handling and Operating Data.

2 PART 1 - DESCRIPTION of the controls and equipment with which the pilot should be acquainted.

3 PART 2 - HANDLING describes the normal handling of the aircraft by the pilot.

4 PART 3 - EMERGENCY HANDLING describes the emergency handling of the Aircraft by the pilot.

5 PART 4 - OPERATING DATA gives the flying and engine limitations and includes information on fuel consumption, range and endurance under various conditions of flight.

6 The four parts described above are written around the Lancaster 10MR as the basic aircraft. Appendices will be added to define the differences that are peculiar to other specialized versions of the Lancaster 10.

7 These notes are complementary to EO 05-1-1 Pilot's Operating Instructions General and assume a thorough knowledge of its contents.

8 In the text, words written in capital letters indicate actual markings on the controls concerned.

9 Comments and suggestions should be forwarded through the usual channels to Air Force Headquarters.

TABLE OF CONTENTS

Part	Title	Page
1	DESCRIPTION	1
	INTRODUCTION	1
	FUEL SYSTEM	1
	Fuel Tanks	1
	Fuel Selection Controls	1
	Primers	1
	Booster Pumps	1
	Pressure Gauges	2
	Contents Gauges	2
	Fuel Jettison Controls	2
	Cross-Feed System	2
	OIL SYSTEM	2
	Oil Tanks	2
	Pressure and Temperature Gauges	2
	Oil Cooler Shutters Control	2
	Oil Dilution System	2
	HYDRAULIC SYSTEM	2
	Engine Driven Pumps	2
	Hand Pump	2
	Pressure Gauges	2
	Emergency System	3
	ELECTRICAL SYSTEM	3
	Ignition and Starting System	3
	Main Distribution Panel and Circuit Breaker Switches	3
	Battery Cart Receptacles	3
	Auxilliary Power Unit	4
	PNEUMATIC SYSTEM	4
	Wheel Brakes	4
	VACUUM SYSTEM	4
	Vacuum Pumps	4
	Vacuum Gauge	4
	Vacuum Selector Cock	4
	COOLANT SYSTEM	4
	Tank	4
	Temperature Gauges	4
	Shutter Controls	4
	FLYING CONTROLS	5
	General	5
	Trim Tab Controls	5
	Control Locking Gear	5
	Flap Selector Lever	5
	Landing Gear Selector Lever	5
	Landing Gear Position Indicator and Horn	5
	Landing Gear Safety Links	5
	AUTOMATIC PILOT	5
	LIMITATIONS	5
	Control Cock	5
	Control Switch	6

TABLE OF CONTENTS (Cont'd)

Part	Title	Page
1	Clutch Lever	6
	Pitch Control	6
	Combined Trim and Air Pressure Gauge	6
	ENGINE CONTROLS	6
	Throttle Controls	6
	Mixture Controls	6
	Idle Cut-Off Controls	6
	Supercharger Control	6
	Automatic Boost Cut-Out	6
	Carburettor Air Intake Control	6
	Propellor Speed Controls	6
	Throttle Quadrant Friction Locks	6
	Feathering Controls	7
	Radiator Shutter Controls	7
	FLIGHT AND ENGINE INSTRUMENTS	7
	Flight Instruments	7
	Engine Instruments	7
	LIGHTING SYSTEM	7
	Interior	7
	Exterior	7
	Identification Lights	7
	Navigation Lights	7
	Formation Lights	7
	Landing Lights	7
	HEATING AND VENTILATING SYSTEM	7
	DE-ICING EQUIPMENT	8
	Propellor Anti-Icing Controls	8
	Airframe De-Icing Controls	8
	Windscreen Anti-Icing Controls	8
	Windscreen Defrosting Controls	8
	Pitot Head Heater Switch	8
	OXYGEN EQUIPMENT	8
	High Pressure Economizer System	8
	RCAF Demand System	8
	Portable Oxygen Equipment	8
	ARMAMENT EQUIPMENT	8
	Turret Operation	8
	Bomb Door Control	8
	Bomb Jettison Control	9
	Guns and Ammunition	9
	TELECOMMUNICATION EQUIPMENT	9
	Interphone	9
	HF Command Radio	10
	VHF Radio	10
	Liaison Radio	10
	Radio Compass	10
	Marker Beacon	10
	Frequency Meter	10

TABLE OF CONTENTS (Cont'd)

Part	Title	Page
1	Instrument Landing System	10
	Low Level Radio Altimeter (0-4000 ft)	10
	High Level Radar Altimeter - (0-5000 ft, 0-40,000 ft)	10
	Loran AN/APN-4	10
	Rebecca AN/APN-2	10
	IFF Mk3	10
	Search Radar H_2S 2D	10
	Sonobuoy Receiver	10
	Dinghy Emergency Radio	10
	NAVIGATION EQUIPMENT	11
	Compasses	11
	Drift Instruments	11
	Air Position Indicator	11
	Ground Position Indicator	11
	Bomb Sight	11
	Emergency Maps	11
	EMERGENCY EQUIPMENT	11
	First Aid	11
	Fire Extinguishers	11
	Engine Fire Extinguishers	11
	Signal Pistol	11
	Emergency Exits	11
	Dinghy	12
	MISCELLANEOUS EQUIPMENT	12
	Seats	12
	Cameras	12
2	HANDLING	17
	PRELIMINARIES	17
	Before Entering the Aircraft	17
	After Entering the Aircraft	17
	OPERATION OF THE FUEL SYSTEM	18
	Tank Selection	18
	Booster Pumps	18
	Testing Booster and Transfer Pumps	18
	STARTING PROCEDURE	18
	Starting the Engines	18
	WARMING UP PROCEDURE	19
	Radiator Shutters	19
	Pressures and Temperatures	19
	Cockpit Check	19
	Radio Check	20
	TAXIING PROCEDURE	20
	Pre-Taxiing Check	20
	Taxiing	20
	ENGINE AND ACCESSORY CHECK	20
	Testing the Engines and Superchargers	20
	TAKE-OFF PROCEDURE	20
	Take-Off	21

TABLE OF CONTENTS (Cont'd)

Part	Title	Page
2	Vital Actions After Take-Off	21
	Control of Carburettor Heat	21
	FLYING CHARACTERISTICS	21
	Rudders	21
	Ailerons	21
	Elevators	21
	Trim Tabs	22
	Stability	22
	Change of Trim	22
	Slow Flying	22
	Stalling	22
	High Speed Stall	22
	Spinning	22
	Diving	22
	Aerobatics	22
	PRACTICE FEATHERING IN FLIGHT	22
	Feathering	22
	Unfeathering	23
	AUTOMATIC PILOT OPERATING PROCEDURES	23
	Ground Check	23
	Flight Operation	23
	LANDING PROCEDURE	24
	Before Joining Circuit	24
	Downwind Leg	24
	Crosswind Leg	24
	Final Approach	24
	Normal Landing	24
	Crosswind Landing	24
	Mislanding	24
	Three Engine Overshoot	25
	Vital Actions After Landing	25
	END OF FLIGHT PROCEDURE	25
	Oil Dilution	25
	Stopping the Engines	25
	Before Leaving the Aircraft	26
3	EMERGENCY HANDLING	27
	EMERGENCY TAKE-OFF	27
	ENGINE FAILURE PROCEDURES	27
	Feathering	27
	Failure During Take-Off	27
	Failure in Flight	27
	HANDLING WITH ASYMMETRIC POWER	27
	Handling on Three Engines	27
	Handling on Two Engines	27
	Fuel System	27
	MAIN SERVICE EMERGENCY PROCEDURES	27
	Flaps	27
	Landing Gear	28
	LANDING WITH ASYMMETRIC POWER	28

TABLE OF CONTENTS (Cont'd)

Part	Title	Page
3	Three Engine Landing	28
	Two Engine Landing	28
	CRASH LANDING PROCEDURE	28
	DINGHY AND DITCHING DRILL	28
	ACTION IN EVENT OF FIRE	28
	Engine Fire	29
	Mainplane Fire	29
	Cabin Fire	29
	ABANDONING THE AIRCRAFT	29
4	OPERATING DATA	31
	FLYING LIMITATIONS	31
	FUEL CONSUMPTION	32
	MAXIMUM PERFORMANCE	32
	Climb	32
	Combat	32
	MAXIMUM RANGE	32
	Climb	32
	Cruise	32

LIST OF ILLUSTRATIONS

Figure	Title	Page
	Frontispiece	vii
	Lancaster 10MR	viii
1-1	Fuel System Diagram	13
1-2	Key to General Cockpit Layout	14
1-3	General Cockpit Layout	15
1-4	Flight Engineer's Panel	16
4-1	Engine Limitations Table	31
4-2	Fuel Consumption Chart	32

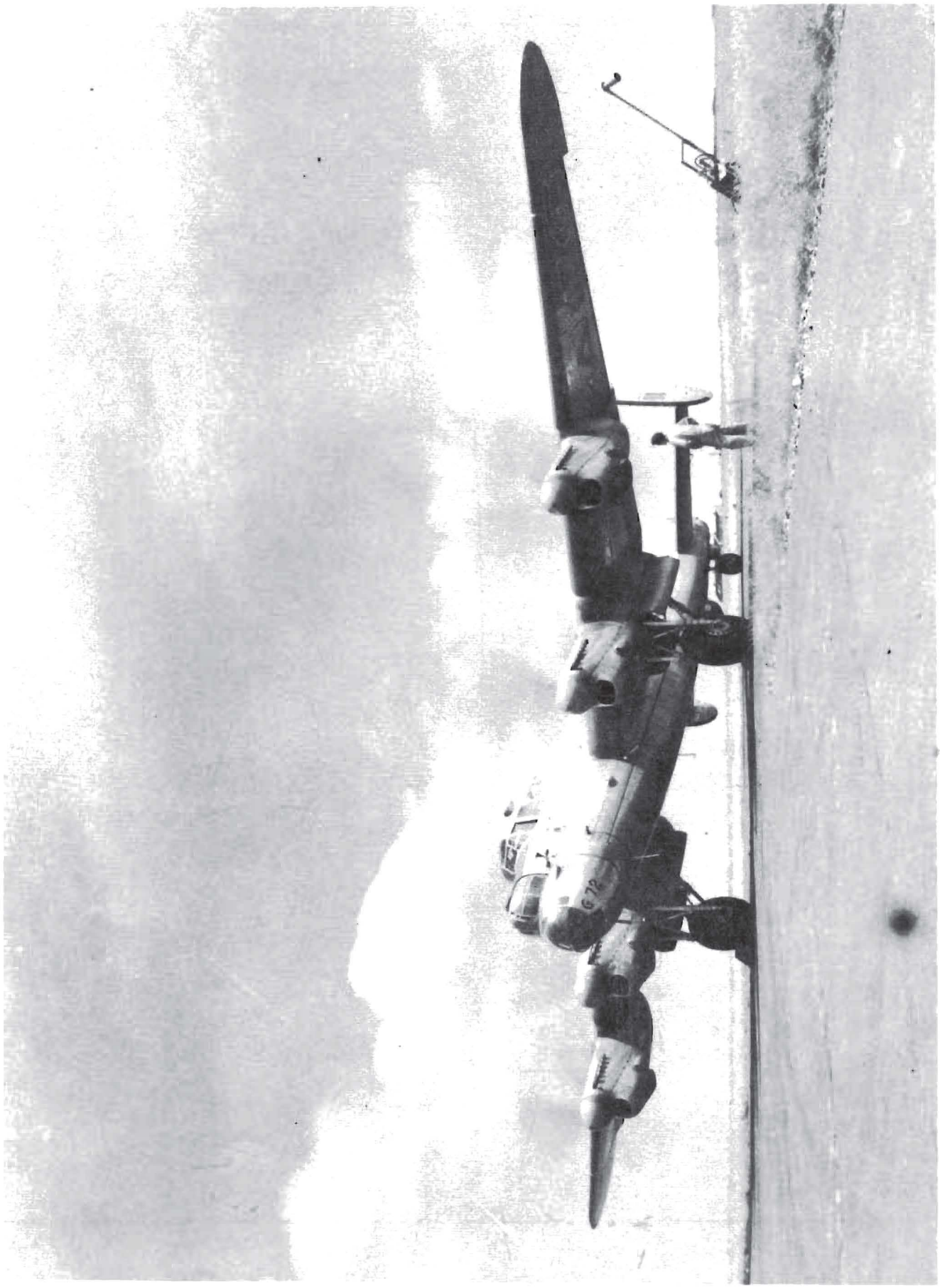

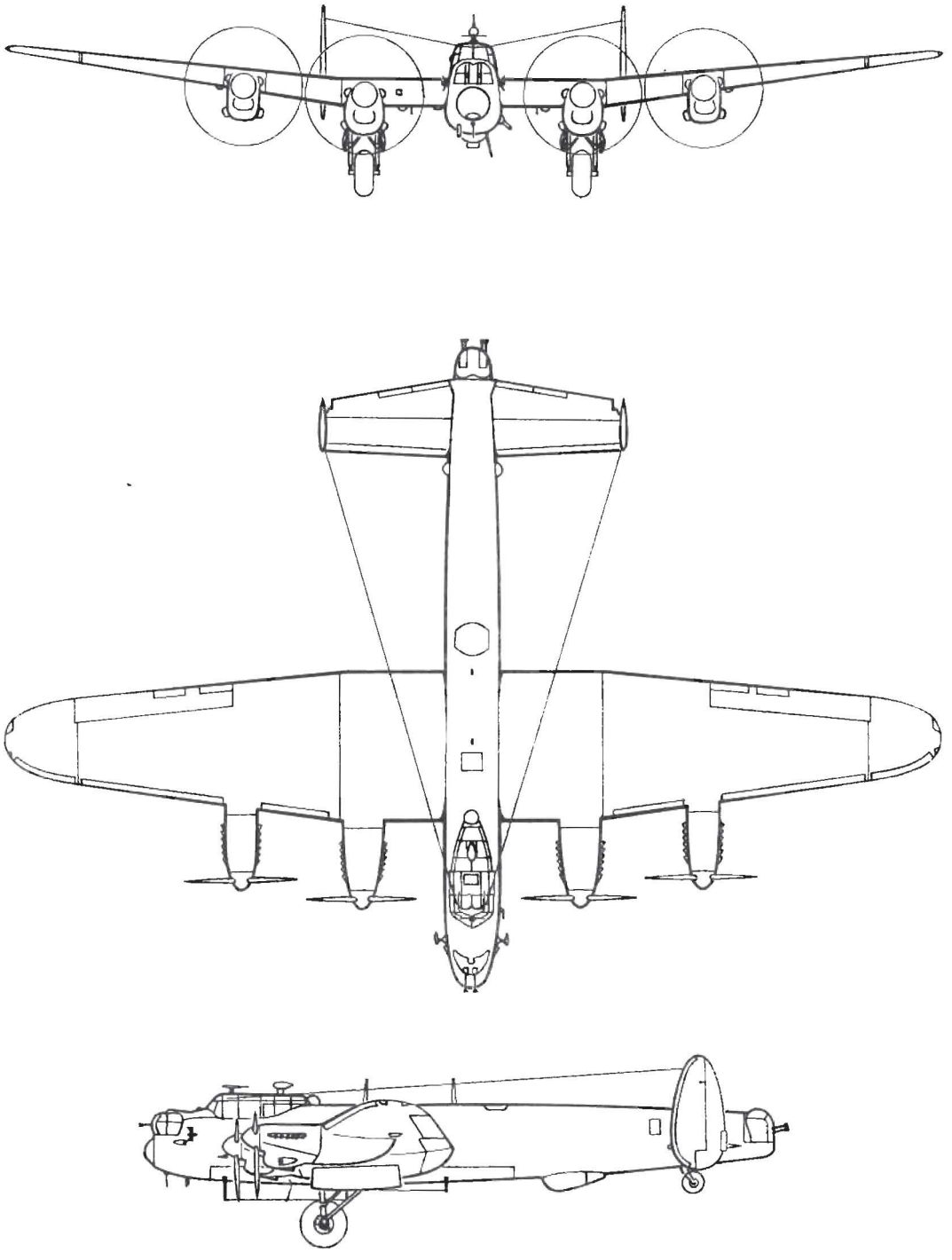

PART 1

DESCRIPTION

INTRODUCTION

1 The Lancaster 10 MR (Maritime Reconnaissance) aircraft is powered by four Packard-built Merlin 224/5 engines each using a Bendix Stromberg pressure injection carburettor and driving a three-blade, full feathering, hydromatic propellor. The aircraft can be used for numerous roles including long range patrols, air-escort for surface vessels, anti-submarine search and limited attack operations. The normal operational crew consists of eight members including two pilots, two navigators, three radio operators and a flight engineer.

FUEL SYSTEM

2 The fuel system consists of three tanks in each wing with a long range tank in the bomb bay. The systems in the wings are normally independent but are also connected by a cross-feed pipe and cock (BALANCE COCK). Fuel from #1 and #2 tanks feeds through a tank selector cock in each wing and then via individual engine master stop cocks, fuel filters and engine driven fuel pumps to the carburettors. The fuel in the #3 tanks can be fed into the corresponding #2 tanks by means of transfer pumps and the fuel from the long range tank can be similarly fed to the #1 tanks.

Fuel Tanks

3 The three tanks in each wing are situated between the front and rear spars and have capacities as follows:

#1 (inboard of engines)	580 Imp. (697 US) gal. each
#2 (between engines)	383 Imp. (460 US) gal. each
#3 (outboard of engines)	114 Imp. (137 US) gal. each
Total One Side	1,077 Imp. (1294 US) gal. on one side
Total Two Sides	2,154 Imp. (2588 US) gal. in all
One Long Range Tank (in bomb bay)	400 Imp. (480 US) gal.
Total Fuel Capacity	2,554 Imp. (3068 US) gal.

Fuel Selection Controls

4 The pilot controls the four master cocks from levers on either side of the control pedestal. The controls for the two tank selector cocks are situated on the flight engineer's panel and the balance cock is mounted on the floor just forward of the front spar with the control handle visible through the front spar cover. The ON and OFF cock for the long range tank is situated behind the front spar in the centre of the fuselage.

Primers

5 The aircraft is fitted with a high pressure (100 psi) priming system with the controls located just below the tank selector controls on the flight engineer's panel. The controls consist of port and starboard pressure gauges which operate only when the 400 cycle inverter switch is on, a port and starboard warning light which indicate which side has been selected, a port and starboard selector switch and four individual engine switches.

6 A hand priming pump is installed in each inboard nacelle. Each pump serves the inboard and outboard engines on their respective sides.

Booster Pumps

7 Each tank is fitted with an electric pump controlled by a switch mounted on the flight engineer's panel above the fuel selector cocks. Those for the #3 tanks and the long range tank are transfer pumps, to transfer the fuel from the #3 tanks into the #2 tanks, and from the bomb bay tank into the #1 tanks respectively. Each switch has three positions: up-TEST, centre-OFF, down-ON. The test position is

used in conjunction with an ammeter on the panel for checking the pumps' operation. The #3 tank switches are protected by guard covers to prevent inadvertent operation.

Pressure Gauges

8 Electrically operated fuel pressure gauges are mounted on the flight engineer's panel.

Contents Gauges

9 Electrically operated fuel contents gauges are mounted on the flight engineer's panel. Dip sticks for ground use are stowed on the starboard side of the fuselage just aft of the main door.

Fuel Jettison Controls

10 A hydraulically operated jettison system is provided for the #1 tanks only. The control handle is mounted on the port side of the pilot's floor, and is painted red. There are two positions, NORMAL and JETTISON. The jettison valve may be closed at any time during jettisoning and should be moved to NORMAL position while there is still about 100 gallons remaining in each tank. In case of failure of the engine driven pumps, the jettison system can be operated by a hand pump on the port side of the fuselage.

Gross-Feed System

11 The balance cock should be closed at all times unless it is necessary in an emergency to feed fuel from the tanks in one wing to the engines in the other wing. If the balance cock is open for this purpose, only one tank should be selected to feed all working engines.

OIL SYSTEM

12 An individual oil system is provided for each engine. There is a centre hopper arrangement in the main oil supply tank on each engine which retains 2 1/2 Imperial gallons for feathering the propellors.

Oil Tanks

13 Each engine has its own oil tank mounted behind the firewall bulkhead with a capacity of 37 1/2 Imperial (45 US) gallons of oil and 4 1/2 Imperial (5 1/2 US) gallons of air space.

Pressure and Temperature Gauges

14 Electrical oil pressure and oil temperature gauges are mounted on the flight engineer's panel.

Oil Cooler Shutters Control

15 Oil temperatures are automatically controlled in conjunction with the engine coolant system with the electro-pneumatically operated radiator shutters opening and closing automatically. The shutters can be opened by means of four radiator over-ride switches in the starboard cockpit wall which open the shutters when placed to the OPEN position. In flight, the radiator shutter switches are normally left in the AUTOMATIC position.

Oil Dilution System

16 Spring-loaded toggle switches for the oil dilution system are mounted on the flight engineer's panel.

HYDRAULIC SYSTEM

17 The hydraulic system operates the main landing gear, wing flaps, bomb doors, carburettor air intake shutters, fuel jettisoning, and the two turrets. The system operates in a pressure range of 220 - 900 psi.

Engine Driven Pumps

18 The nose and tail turrets are operated individually by pumps on the #3 and #1 engines respectively. Two pumps, one each on the #2 and #3 engines, operate the remaining services.

Hand Pump

19 The hydraulic hand pump, situated on the port side of the fuselage just aft of the front spar, is to be used only for ground test and for emergency operation of air intake shutters and fuel jettison valves. Owing to the large capacity of the flap and landing gear jacks, it is not practicable to operate them by the hand pump in an emergency. These services are supplied with an emergency pneumatic system.

Pressure Gauges

20 The hydraulic pressure gauge is mounted on the accumulator beside the hand pump.

Emergency System

21 In the event of failure of the engine driven pumps or hydraulic circuit, an emergency system of compressed air is provided for the landing gear and flaps, operating at 1200 psi. The release controlling this air is mounted on the bulkhead to rear of the flight engineer's panel.

ELECTRICAL SYSTEM

22 Direct current power is supplied by 1500 watt, 28.5 volt type KX generators, mounted on the inboard engines and two, 3000 watt, 28.5 volt, type UO generators mounted on the outboard engines. The DC generators charge two 12 volt - 80 ampere-hour batteries arranged in series to give 24 volt - 80 ampere-hours, for use on all general services. Mounted between the spars on the starboard side of the aircraft is fitted a main switch (GROUND/FLIGHT) which isolates all electrical services from the batteries. This switch should be kept in the GROUND position when the aircraft is on the ground and for starting the engines from an outside source of supply. Alternating current power, 1200 watts, 80 volts, at 1200 - 2400 cycles, is also derived from the UO generators and is supplied for the operation of special radio and radar equipment. Two invertors, 400 cycle, 115 volts, operate the B3 driftmeter, DR compass and high pressure priming gauges. The electrical system supplies the following services:

(a) All aircraft lighting.

(b) Radio and radar equipment.

(c) Engine starting, booster coils and high pressure priming.

(d) Bombing gear, bomb sight and cameras.

(e) Fuel system; booster pumps, pressure and contents gauges.

(f) Propellor feathering pumps.

(g) Flaps and landing gear indicators.

(h) DR compass.

(j) Pitot head heater.

(k) Controls for de-icing, radiator shutters, super-charger gear rams and idle cut-off rams.

(l) Heated clothing.

(m) Dinghy inflation.

Ignition and Starting System

23 The engine starting motors are controlled by push-button switches mounted on the pilot's instrument panel to the right of the ignition switches which are mounted centrally. A booster coil switch to assist in starting the engines is located between the ignition and starter sets of switches.

Main Distribution Panel and Circuit Breaker Switches

24 The main electrical panel is mounted on the starboard side of the fuselage aft of the flight engineer's position. This panel contains the circuit breaker switches, generator control switches, ammeters and voltmeters, radio control switches, wing tip and station light switches. The function of the circuit breakers is to protect the system against overloads and also act as distribution switches linking the operating switches to the batteries and generators. The breaker switches must be on before the service will operate. Should a momentary overload open one of the circuit breakers the switch may be reset after waiting 30 seconds to allow the breaker to cool. The circuit breaker switches are numbered and an index card is posted on the distribution panel to identify each switch.

25 An auxiliary panel containing a field switch, an ammeter and a circuit breaker for each outboard generator is mounted on the starboard side of the fuselage aft of the main panel. A two position switch on the flight engineer's panel operates the two 400 cycle invertors.

Battery Cart Receptacles

26 Each inboard nacelle is equipped with a receptacle for plugging in an external ground power supply for ground testing the aircraft services and for starting. In the port nacelle is an English type receptacle and in the starboard nacelle an American type.

CAUTION

When using the American type receptacle, the GROUND/FLIGHT switch must be in GROUND position or a short will result.

•

Auxilliary Power Unit

27 The aircraft is fitted with an auxilliary power unit mounted in the aft end of the fuselage. If not needed, the APU is easily removed.

PNEUMATIC SYSTEM

28 The pneumatic system of the aircraft operates the Dunlop type wheel brakes, and the electro-pneumatic rams connected to the radiator shutters, supercharger and idle cut-off controls. Compressed air is supplied from a container which is charged to 300 - 320 psi by a Heywood compressor mounted on #3 engine. An auxilliary compressor is mounted on #4 engine and operates all pneumatic services. An RAE compressor on #2 engine operates the automatic pilot.

Wheel Brakes

29 The working pressure of the wheel brakes is 85 - 90 psi, so that in the event the compressor fails, it is possible to obtain several applications of the brakes from the container. The brakes are applied by operating a lever on the pilot's handwheel, and then differential action is obtained by a relay valve connected to the port rudder bar. The brakes may be locked for parking by compressing the lever fully and engaging the locking catch which is beside the lever. The available pneumatic pressure and the pressure at each brake is shown on a triple pressure gauge mounted on the right of the front panel. Below this main gauge is another pressure gauge for the auxilliary system.

VACUUM SYSTEM

30 A vacuum system is provided to supply the necessary suction head to operate certain of the flying instruments and the Mk 3 low level bomb sight. The pressure side of these pumps help in the inflation of the de-icer boots.

Vacuum Pumps

31 Two Pesco pumps are used, mounted on #2 and #3 engines. Normally #2 engine vacuum pump operates the flight instruments while #3 engine pump operates the bomb sight. In an emergency #3 engine pump may be selected for the flight instruments but the other services would then be inoperative.

Vacuum Gauge

32 The suction gauge is mounted on the starboard side of the instrument panel and normally reads 3 1/2" - 5" Hg.

Vacuum Selector Cock

33 A change-over cock, on the right side of the instrument panel connects the instruments to the #2 engine pump in the #1 position and to #3 engine pump in the #2 position.

COOLANT SYSTEM

34 The cooling system of each engine comprises a header tank mounted behind the front cowling diaphragm, a radiator attached below the engine in a duct at the front end of the engine cowling and a thermostat. The system operates under pressure which is controlled by a thermostatic relief valve at the top of the header tank. The inboard engine cooling systems are each connected to one of the cabin heating radiators.

Tank

35 A horse shoe type header tank filled with 60% Glycol and 40% distilled water is mounted over the reduction gear of each engine. The coolant system has a capacity of 11 1/2 gallons on #1 and #4 engines, 12 1/2 gallons on #3 engine and 17 gallons on #2 engine. The greater quantities for #2 and #3 engines are required for the cabin heating systems.

Temperature Gauges

36 The four electrical coolant temperature gauges are mounted on the flight engineer's panel.

Shutter Controls

37 The radiator shutters are electro-pneumatically operated, and the control under normal conditions is entirely automatic. An over-ride switch for each ram is supplied on an auxiliary panel mounted on the starboard side of the cockpit forward of the flight engineer and is normal-

ly operated by the co-pilot. These switches prevent overheating of both engine and coolant during ground run-up, taxiing, etc. The switches are normally placed in the OPEN position for ground running and taxiing. They are switched to AUTOMATIC for flight and returned to the OPEN position after landing.

FLYING CONTROLS

General

38 The aircraft is fitted with conventional dual controls. The handwheel incorporates a bomb firing switch, a radio transmit switch and a brake lever. The rudders are of the pendulum type and each pedal is independently adjustable.

Trim Tab Controls

39 The aileron, elevator and rudder trim tabs are controlled by handwheels on the trim tab control gear box at the right of the pilot's seat, and these wheels operate in the natural sense. Indicators are provided beside the handwheels to show the position of the tabs.

Control Locking Gear

40 The flying control locking gear is stowed on the starboard side of the fuselage just aft of the radio operator's seat and consists of two struts, a T-tube and a landing gear lever lock.

Flap Selector Lever

41 The push-pull handle controlling the hydraulic operation of the flaps is on the right of the pilot's seat in front of the tab control gear box. To lower the flaps, the handle is pushed down until the indicator on the left hand side of the instrument panel shows the required setting in degrees. Then the handle is returned to the neutral position which is indicated by a spring-loaded catch. The flaps are raised by pulling the handle up, and again returning the handle to the neutral position.

Landing Gear Selector Lever

42 The lever controlling the hydraulic operation of the landing gear is on the right of the pilot's seat aft of the trim tab control gear box and has two positions only. To retract the landing gear the lever is pulled up. A spring-loaded safety bolt must be held aside before the lever can be raised, but automatically engages when the landing gear is lowered.

Landing Gear Position Indicator and Horn

43 The indicator is mounted on the left hand side of the instrument panel. When lowering the landing gear a pair of wheels show on the instrument moving to the down position, and when locked position is reached the wheels show vertically down. When the landing gear is being raised the instrument indicates wheels being raised until out of sight. The landing gear indicator instrument will not operate until the indicator switch has been turned on. To ensure that the instrument will be in operation during flight, it has been made impossible to turn on the ignition switches until the indicator switch has been turned on. A warning horn is also provided, but only works in conjunction with the throttle levers of the inboard engines.

Landing Gear Safety Links

44 Two red-coloured jury struts are provided for fixing into the landing gear frame when the aircraft is on the ground to prevent the landing gear from being accidently retracted.

AUTOMATIC PILOT

45 A pneumatically operated Mk 8 automatic pilot is installed by inoperative.

ENGINE CONTROLS

Limitations

46 The automatic pilot must be d[illegible] for all take-offs and landings and [illegible] for all operations below 1000 [illegible] the ground. The minimum pre[illegible] which the system can safely be [illegible] 45 psi. If this pressure canno[illegible] ined no attempt should be made [illegible] utomatic pilot.

DELETED

Control C[illegible]

47 [illegible]e normal means of engaging and [illegible] the automatic pilot. A locking catch [illegible]ded to prevent the lever from being

DELETED

moved inadvertently from "SPIN" to "IN

Control Switch

48 This switch has three positions OFF, COMPASS OR COURSE, JINK OR When set to "COMPASS OR COURSE" craft is controlled by the pilot's DR co epeater. With the switch in the "JINK C " position the aircraft executes a we noeuver of about plus or minus 15° ir d of approximately 30 seconds.

Clutch Lever

49 This is used clutching the servo motors which oper main control surfaces and should only in an emergency.

Pitch Control

50 This to alter the fore and aft attitude of t aft.

Combi n and Air Pressure Gauge

51 al of this instrument is divided into two s. The needle in the right-hand sector ir the main air pressure. The left hand ndicates fore and aft trim. The com- r, mounted on #2 engine holds the air ure at a constant 60 psi.

ENGINE CONTROLS

Throttle Controls

52 There are four throttle levers mounted on the control pedestal in the centre of the cockpit below the instrument panel.

Mixture Controls

53 There is no manual mixture control for the Bendix-Stromberg pressure injection carburettors that are fitted, since an automatic mixture control is incorporated. There is a further regulation by the boost to give an economical mixture below plus 7 psi mp and a richer mixture for higher boost settings.

Idle Cut-Off Controls

54 The electro-pneumatically operated idle cut-off controls are actuated by corresponding switches mounted on the top right hand side of the pilot's instrument panel. Each switch has two positions down OFF for the idle cut off position and up ON for the engine running position. The switches are spring-loaded in the ON position. In the case of electrical of pneumatic failure, the rams return to the running position.

Supercharger Control

55 The supercharger gear change is electro-pneumatically operated by a master switch mounted on the right side of the pilot's instrument panel. This switch has two positions, FS for high blower and MS for low blower, and controls all four engines simultaneously. A warning light mounted with the master switch will indicate red if the engines are run on the ground in high blower. In the event of electrical or pneumatic failure, the supercharger will stay in, or return to, low blower.

Automatic Boost Cut-Out

56 This lever is on the extreme left of the control pedestal and is pulled down to cut-out the automatic boost. The lever is locked in either position by a spring catch.

Carburettor Air Intake Control

57 A single lever for the hydraulic operation of all four carburettor warm air intakes is on the left of the pilot's seat. There are only two positions COLD and WARM. In the WARM position, air is drawn from the radiator to the engine. Emergency carburettor heat is controlled by a two position switch above the radiator shutter controls and is operated electrically allowing warm air from the radiator to pass around the roof of the carburettor and into the carburettor hot air intake only when the normal carburettor heat control is ON.

Propellor Speed Controls

58 Four propellor speed control levers are fitted in the control pedestal below the throttles. To increase the engine speed the levers are moved upward.

Throttle Quadrant Friction Locks

59 Friction adjusters for the throttles and propellor speed controls are mounted on the

starboard side of the control pedestal.

Feathering Controls

60 Four red-coloured push buttons are provided on the right side of the instrument panel for feathering the propellors.

Radiator Shutter Controls

61 The electro-pneumatically operated shutters are automatically controlled when the individual two-position switches, situated forward of the flight engineer's panel, are in the up or AUTOMATIC position. In the down or OPEN position, the thermostatic control is overridden and the shutters are opened. The OPEN position should be selected for all ground running.

FLIGHT AND ENGINE INSTRUMENTS

Flight Instruments

62 A normal flight instrument panel occupies the port side of the pilot's main instrument panel, see Figure 1-3.

Engine Instruments

63 Four boost gauges and below them four engine speed indicators are mounted at the centre of the pilot's instrument panel. The remaining engine instruments are mounted on the flight engineer's panel, see Figure 1-4.

LIGHTING SYSTEM

64 The general lighting services are fed from the circuit breaker switches on the main electrical panel.

Interior

65 Infra red flood lights with individual rheostats are provided for the cockpit and for each crew position. Call lamps are also provided at each crew station.

Exterior

66 A master external light switch, mounted on the lower portion of the pilot's panel, governs all of the following external lights.

Identification Lights

(a) Located above and below the forward end of the rear section of the fuselage, and are controlled by an identification switch box on the right hand side of the pilot's instrument panel. An additional white light located on the nose is controlled from the main electrical panel when the other identification lights are on.

Navigation Lights

(b) Located in the tail and on the wing tips and are controlled by an ON-DIM-BRIGHT switch located beside the pilot's seat directly behind the radio altimeter altitude control.

Formation Lights

(c) Three lights at each wing tip coloured red, green and yellow and one at the rear end of the fuselage are controlled by an identification switch box on the pilot's instrument panel.

Landing Lights

(d) Two landing lights are mounted on the forward undersurface of the port outer wing. Each light is individually controlled by switches located on the top of the pilot's position and have three positions - ON, OFF and RETRACT.

HEATING AND VENTILATING SYSTEM

67 The cockpit is heated by warm air from the radiator mounted in the main plane leading edge and connected to #3 engine cooling system. The control knob which operates a shutter in the air duct is on the starboard side of the fuselage just forward of the main spar. When turned anti-clockwise it opens the inlet to the cabin and closes the by-pass to the outer air. To control the escape of air from the cabin an extractor louvre is provided on each side of the nose of the fuselage. Rear cabin heating is obtained from the hot coolant from #2 engine running to a Morris radiator on the starboard side of the fuselage near the rear spar. A duct on the outside of the fuselage draws air which is heated by the radiator for rear fuselage and tail turret heating.

DE-ICING EQUIPMENT

Propellor Anti-Icing Controls

68 This system is operated by a rheostat switch located on the flight engineer's instrument panel, one switch for all four engines. One pump, motor and solenoid in each inboard engine nacelle feed the propellors. Filtered alcohol is delivered from common supply tanks located in the rear portion of the inner nacelles.

Airframe De-Icing Controls

69 There are ten boots in the installation, one on each tailplane and fin and three on each mainplane. To operate, turn on the master de-icing switch on the main distribution panel.

Windscreen Anti-Icing Controls

70 A spray of de-icing fluid can be directed over the windscreen by operating a hand pump mounted on the floor, forward and to the left of the pilot's seat. Similarly, a pump on the port side of the fuselage nose supplies de-icing fluid for the bomb aimer's window. The reservoir for the two pumps holds approximately four gallons and is fitted below the step at the rear of the nose section. If the pump is operated at the rate of once per minute, it will deliver fluid at the rate of two pints per hour.

Windscreen Defrosting Controls

71 When the cabin heat control is selected ON, automatic hot air defrosting is supplied to the pilot and co-pilot windscreens and the astro dome, The rear observation windows are equipped with flexible defrosting hoses.

Pitot Head Heater Switch

72 The switch is mounted on the flight engineer's panel and has three positions OFF, ON and TEST.

OXYGEN EQUIPMENT

73 There are two types of oxygen systems in use in the Lancaster 10MR, as follows:

High Pressure Economizer System

(a) Oxygen is supplied under high pressure to a regulator on the pilot's instrument panel and from there through four manifolds and low pressure pipes to the economizers at the crew stations. The main supply is controlled by the pilot, while at each crew station there are installed a flexible oxygen connection, an oxygen economizer, a flow meter and a cut-off valve, The cut-off valves are opened by the removal of the flexible pipe from the stowage slips. The British A-type mask is used with this system.

RCAF Demand System

(b) Oxygen is supplied from three transport cylinders with normal full pressure at 1800 psi. An oxygen pressure gauge is located on the ditching panel, together with two oxygen regulators to reduce the pressure from 1800 psi to 25 psi. There are fourteen outlet stations situated at crew positions, each consisting of a type C-3A Canadian demand oxygen regulator and a ball type oxygen flow indicator. The type A-13A mask is to be used with this oxygen system.

Portable Oxygen Equipment

74 On those aircraft fitted with the high pressure economizer system, there are British Mk 1A portable oxygen bottles installed while on those aircraft equipped with the RCAF demand system, three type D-2 walk around assemblies are installed.

ARMAMENT EQUIPMENT

75 The aircraft is protected by two power-operated gun turrets. The front turret forms the upper part of the nose of the aircraft, and the rear turret is mounted in the extreme tail of the aircraft.

Turret Operation

76 Each turret is operated by an individual engine driven hydraulic pump. The #1 engine pump supplies the rear turret and #3 engine pump supplies the nose turret.

Bomb Door Control

77 The bomb doors are opened hydraulically by pushing down the lever on the left of the pilot's seat. Although the bombing system will not function until the bomb doors open, the position of the doors must be checked visually before releasing bombs. If there is icing around

the hinges and joints, the bomb doors may open only part way and then stop due to the hydraulic pressure rising sufficiently to bring the cut-out into operation and stopping any further movement of the doors. In such cases, to open the doors further, move the bomb doors selector to SHUT and then immediately to OPEN; it may be necessary to repeat this several times to get the doors fully open.

Bomb Jettison Control

78 The complete bomb load may be jettisoned after the bomb doors have been opened by means of the jettison handle fitted on the right side of the instrument panel. If bomb containers are carried they should be jettisoned first by the bomb container jettison switch fitted to the left of the bomb jettison handle.

Guns and Ammunition

79 The following guns and ammunition can be carried.

Nose turret - Two Browning guns - ammunition 2000 Rds each gun
Rear turret - Four Browning guns - ammunition 2500 Rds each gun

TELECOMMUNICATION EQUIPMENT

80 The following telecommunications equipment is installed as described in the succeeding paragraphs:

(a) Interphone 3611B.

(b) HF Command Radio Set SCR 274N.

(c) VHF Radio set - Two SCR 522 (8 channels).

(d) Liaison Radio - ART-13 Transmitter, BC 348 Receiver.

(e) Radio Compass - AN/ARN6.

(f) Marker Beacon - MN-53A.

(g) Frequency Meter - SCR 211.

(h) Instrument Landing System - SCS 51.

(j) Low Level Radio Altimeter - AN/APN-1.

(k) High Level Radar Altimeter - SCR 718C.

(l) Loran - AN/APN-4.

(m) Rebecca - AN/APN-2.

(n) IFF Mk3.

(p) Search Radar - H_2S 2D.

(q) Sonobuoy Receiver.

(r) Dinghy Emergency Radio - SCR 578A.

Interphone

81 For crew member communication and for multiple crew member participation in radio operations, an interphone jackbox is installed at each crew member's station. The 3611B interphone system functions as follows:

(a) When a selection is made on the jackbox selector switch the following is accomplished:

When the jackbox selector switch is placed,

(1) On "COMP", supplies audio output of radio compass receiver.

(2) On "LIAISON", supplies audio radio output of radio receiver (liaison) and liaison transmitter sidetone and when operating adjustments are completed at radio operator's position permits all but navigator and sonobuoy operator to modulate liaison transmitter when microphone "push to talk" switch is pressed. The navigator and sonobuoy operator LIAISON positions are wired to the output of the sonobuoy receiver.

(3) On "COMMAND", supplies the audio output of command receivers of radio sets SCR 274N or SCR 522, and permits pilot, co-pilot, or radio operator to modulate command set transmitter when microphone push to talk switch is pressed.

(4) On "INTER", permits communication with any other crew member whose jackbox selector switch is on "INTER".

(5) On "CALL", permits any member of the crew to call any other crew member regardless

of setting of other member's selecting switch.

HF Command Radio

82 Two transmitters of the SCR 274N HF Command Sets and three receivers are fitted. The controls are installed on the pilot's radio control panel in the canopy roof.

VHF Radio

83 Two VHF 4 channel SCR 522 sets are fitted. The radio control box and the HF - VHF transmitter switch are on the VHF channel selector box located above the pilot's head.

Liaison Radio

84 The liaison transmitter ART-13 and the receiver BC-348 and controls are installed above the radio operator's table.

Radio Compass

85 This system may be controlled by either the pilot or the navigator through their individual control units. The pilot's control unit is installed on the centre frame of the pilot's windshield.

Marker Beacon

86 The marker warning lights and sensitivity switch are positioned on the upper left side of the pilot's main instrument panel.

Frequency Meter

87 This instrument is used to set up the frequencies of the liaison and HF command transmitters. The SCR 211 frequency meter is an accurately calibrated signal generator. It is located on the port side of the fuselage floor immediately behind the main spar.

Instrument Landing System

88 An indicator is [illegible] side of the pilot's [illegible] control box is [illegible] radio control panel on the

DELETED

Low Level Radio Altimeter (0-4000 ft)

89 The indicator and the three altitude limit lights for the AN/APN-1 radio altimeter are mounted on the port side of the pilot's instrument panel. The circuit switch is on the radio officer's circuit breaker panel.

High Level Radar Altimeter - (0-5000 ft, 0-40,000 ft)

90 The indicator for the SCR 718C radar altimeter is located on the port side above the navigator's table.

Loran AN/APN-4

91 The indicator is located on the navigator's table. The antenna changeover switch panel provides for the following alternative selections:

(a) Loran trailing and liaison fixed antenna.

(b) Liaison trailing and loran fixed antenna.

Rebecca AN/APN-2

92 The indicator is installed above the aft end of the navigator's table. The control box and the tuning unit are fitted in the same location.

IFF Mk3

93 The channel selector box is located in the radio operator's position.

Search Radar H_2S 2D

94 The indicator and controls are located in the radar operator's position.

Sonobuoy Receiver

95 The sonobuoy receiver equipment, including the Pierce wire recorder, is located on the port side at the rear rest position.

Dinghy Emergency Radio

96 An SCR 578A set is located on the starboard side at mid rest position.

NAVIGATION EQUIPMENT

Compasses

97 A Distance Reading Compass is fitted with a master unit situated on the starboard side forward of the main door and two repeaters, one in the pilot's canopy and one on the AP1 in the navigator's position. The control switches are on the navigator's panel. A P11 Direct Reading Compass is mounted on the port side of the pilot's instrument panel.

Drift Instruments

98 A Mk 2 Drift Recorder is mounted on the starboard side directly behind the navigator and a B3 Driftmeter is mounted on the starboard side in the nose section.

Air Position Indicator

99 This set is mounted on navigator's table.

Ground Position Indicator

100 This set is mounted above the navigator's table.

Bomb Sight

101 A Mk 3 low Level Bomb Sight is mounted in the nose section in the bomb aimer's position.

Emergency Maps

102 Located in locker beneath seat in rear rest position.

EMERGENCY EQUIPMENT

First Aid

103 A container is stowed on starboard side of fuselage aft of main door. It can be reached from outside by a pull out panel.

Fire Extinguishers

104 Hand fire extinguishers are installed as follows:

(a) One on the right side of air bomber's compartment.

(b) One on the left side of pilot's seat.

(c) One under the pilot's seat, accessible to flight engineer.

(d) One on the right side forward of the front spar.

(e) One on the right side forward of main door.

(f) One at left side of the rear turret.

Engine Fire Extinguishers

105 Each engine is provided with a fire extinguisher system having two electrically operated bottles in each nacelle. The bottles can be operated either manually by push buttons on the lower portion of the co-pilot's panel or by an inertia switch on the starboard side of the nose section. The inertia switch is set off automatically when the aircraft crashes with the wheels up. Wax sealed switches on the engine firewall and frame, when melted, give indication by red warning lights above the manual push buttons.

Signal Pistol

106 One signal pistol is stowed on top of the front spar, the firing position is in the roof above the stowed position. Cartridges are stowed on starboard side just forward of the main spar.

Emergency Exits

107 Three push-out type emergency exits are fitted in the roof of the fuselage; one in the pilot canopy, one in the mid rest position and one in the old mid upper turret position. THESE SHOULD NOT BE USED AS PARACHUTE EXITS. Parachute exits may be made from a hatch in the floor of the nose or from the main entrance door. The hatch in the nose is jettisoned by lifting the handle at the centre.

WARNING

The tailplane of the Lancaster is too close to the rear door to permit the safe ejection of equipment. In past, fatal accidents have occurred as a result of the starboard

elevator having been fouled by a parachute and packet of supplies which had been ejected from the rear door. Consequently, the ejection of supplies or equipment by any means from the rear door of the Lancaster is prohibited. The only exception to this rule will be at the aircraft captain's discretion in extreme emergencies.

Dinghy

108 A 10 man dinghy is stowed in the starboard wing and may be released and inflated in the following ways:

(a) From inside by pulling the release cord running along the fuselage roof aft of the rear spar.

(b) From outside by pulling the loop on the starboard side in front of the tail plane leading edge.

(c) Automatically by the two immersion switches in the nose.

MISCELLANEOUS EQUIPMENT

Seats

109 The pilot's seat is provided with hinged arm rests and is adjusted for height by a lever on the left side. The Sutton harness is released by a lever on the right arm rest. The co-pilot's seat is collapsible and folds up against the starboard wall. A bar is provided as foot rest and slides under the pilot's seat platform when not in use.

Cameras

110 A rear facing camera is mounted in the floor forward of the rear turret. Its operation is controlled by a bomb firing switch. A vertical camera is mounted on the port side of the nose section in the bomb aimer's position.

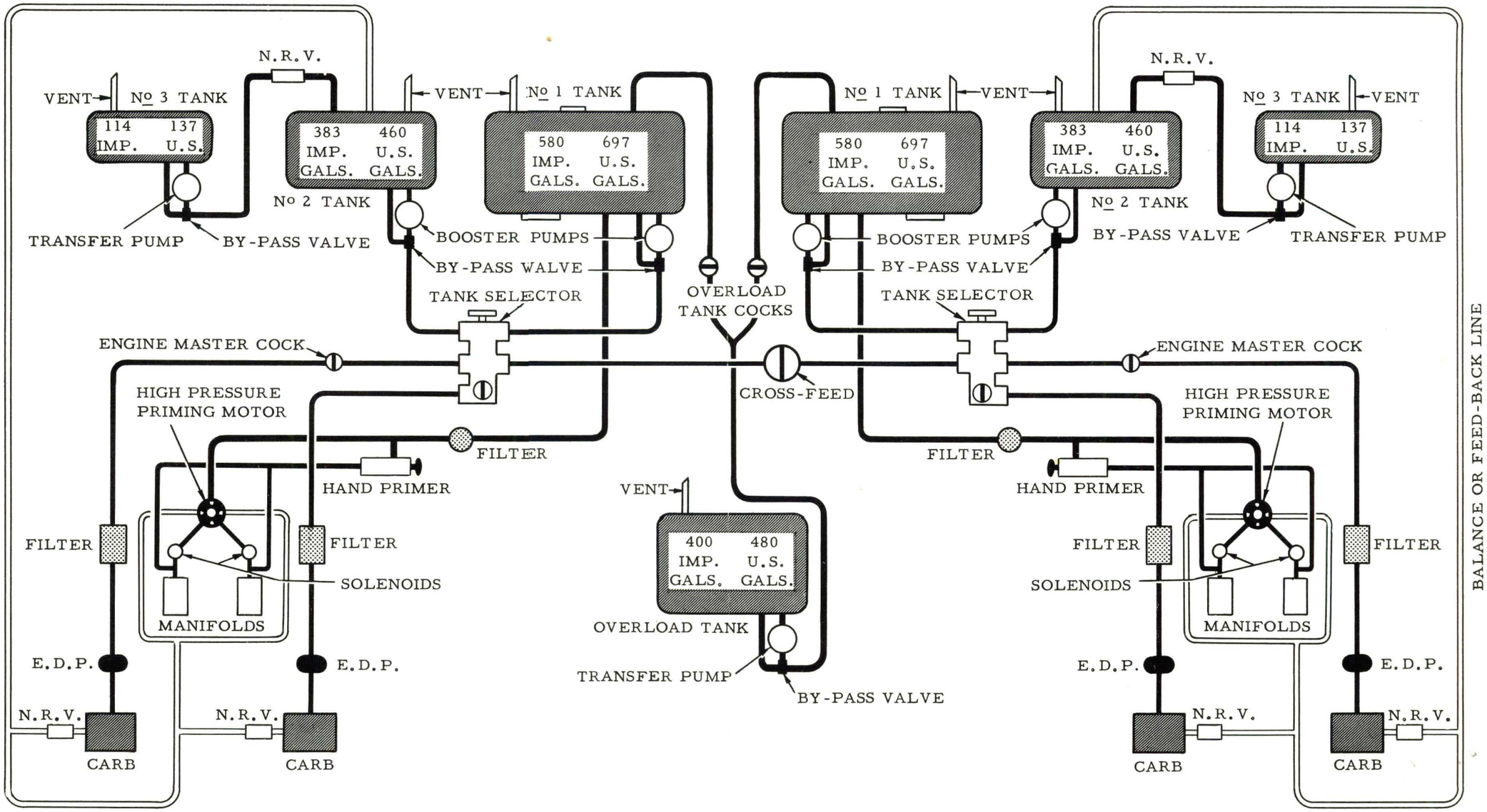

Figure 1-1 Fuel System Diagram

PUBLISHED BY AVIALOGS.COM

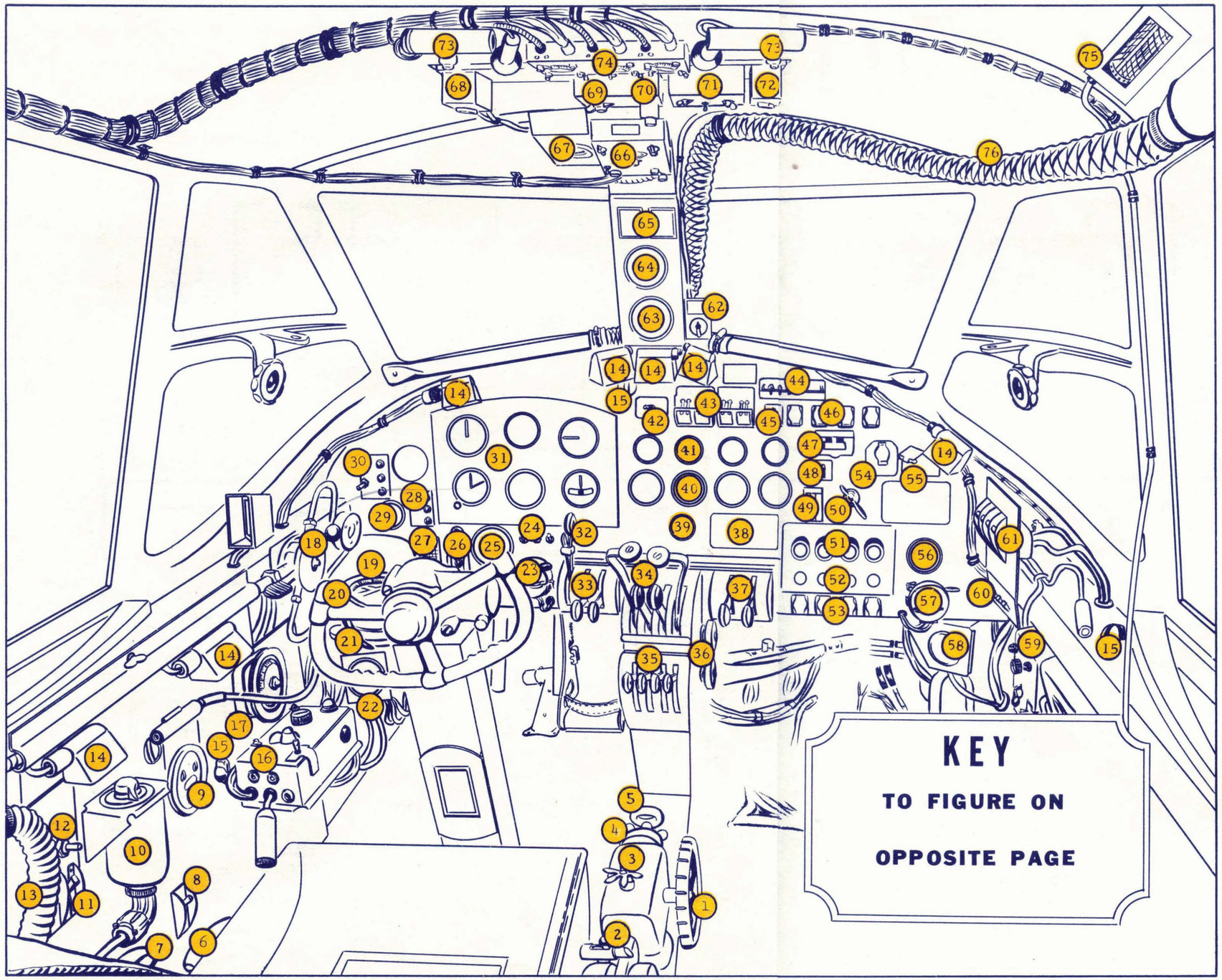

1 ELEVATOR TRIM CONTROL WHEEL
2 U/C SELECTOR LEVER AND LOCKING PIN
3 RUDDER TRIM CONTROL
4 AILERON TRIM CONTROL
5 FLAP SELECTOR LEVER
6 FUEL JETTISON LEVER
7 BOMB-DOOR CONTROL LEVER
8 ULTRA-VIOLET LIGHTING SWITCH
9 ASH TRAY
10 RADIO ALTIMETER
11 NAVIGATION LIGHTS ON-DIM-BRIGHT SWITCH
12 NAVIGATION LIGHTS ON-OFF SWITCH
13 PILOT'S OXYGEN SUPPLY
14 COCKPIT RED LIGHTING (7 Locations)
15 RED LIGHTING RHEOSTAT (4 Locations - One Behind Item 10)(Not Shown)
16 PILOT'S JUNCTION BOX
17* AUTO-PILOT ELEVATOR TRIMMER
18* AUTO-PILOT IN-OUT CONTROL
19 P COMPASS
20 PARKING BRAKE
21 PNEUMATIC BRAKE LEVER
22 OXYGEN FLOW INDICATOR
23 SIGNALLING SWITCH BOX
24 IDENTIFICATION LIGHTS
25 U/C AND FLAP POSITION INDICATOR
26 PILOT'S INSTRUMENT LIGHTING SWITCH
27 P COMPASS CORRECTION CARD
28 RADIO ALTIMETER INDICATOR LIGHTS
29 RADIO ALTIMETER
30 MARKER BEACON LIGHTS
31 STANDARD FLYING PANEL
32 BOOST CONTROL CUT-OUT
33 MASTER FUEL COCKS - PORT
34 THROTTLES
35 PROPELLOR CONTROLS
36 THROTTLES AND PROPELLOR CONTROLS FRICTION NUTS
37 MASTER FUEL COCKS - STARBOARD
38 SUPERCHARGER CONTROL PANEL

Figure 1-2 Key to General Cockpit Layout

PUBLISHED BY AVIALOGS.COM

39 CLOCK
40 RPM INDICATORS
41 BOOST-PRESSURE GAUGES
42 U/C INDICATOR MASTER SWITCH
43 MAGNETO IGNITION SWITCHES
44 SLOW-RUNNING CUT-OUT SWITCHES
45 BOOST-COIL SWITCH
46 ENGINE STARTING SWITCHES
47 IFF DETONATOR BUTTONS
48 IFF ON-OFF SWITCH
49 VACUUM SUCTION GAUGE
50 VACUUM SELECTOR
51 PROPELLOR FEATHER BUTTONS
52 ENGINE FIRE WARNING LIGHTS
53 ENGINE FIRE EXTINGUISHER BUTTONS
54 CONTAINER JETTISON BUTTON
55 BOMB JETTISON
56 PNEUMATIC PRESSURE GAUGE
57 SIGNALLING SWITCH BOX
58 AUXILIARY-AIR PRESSURE GAUGE
59 CO-PILOT'S JUNCTION BOX
60 RADIATOR SHUTTER CONTROLS
61 EMERGENCY CARBURETTOR HEAT
62 * AUTO-PILOT JINK CONTROL
63 RADIO COMPASS
64 GYROSYN COMPASS
65 CORRECTION CARD HOLDERS
66 AUTOMATIC RADIO COMPASS
67 DR COMPASS
68 RADIO JACK BOX
69 VHF CONTROL BOX
70 VHF/HF SELECTOR SWITCH
71 HF TRANSMITTER CONTROL
72 RADIO JACK BOX
73 ULTRA-VIOLET LIGHTING (2 Locations)
74 HF COMMAND SET
75 LOW-LEVEL BOMBING COMPUTER
76 * WINDSHIELD DEFROSTER DUCT

* Installed but inoperative.

Revised 27 Apr 55

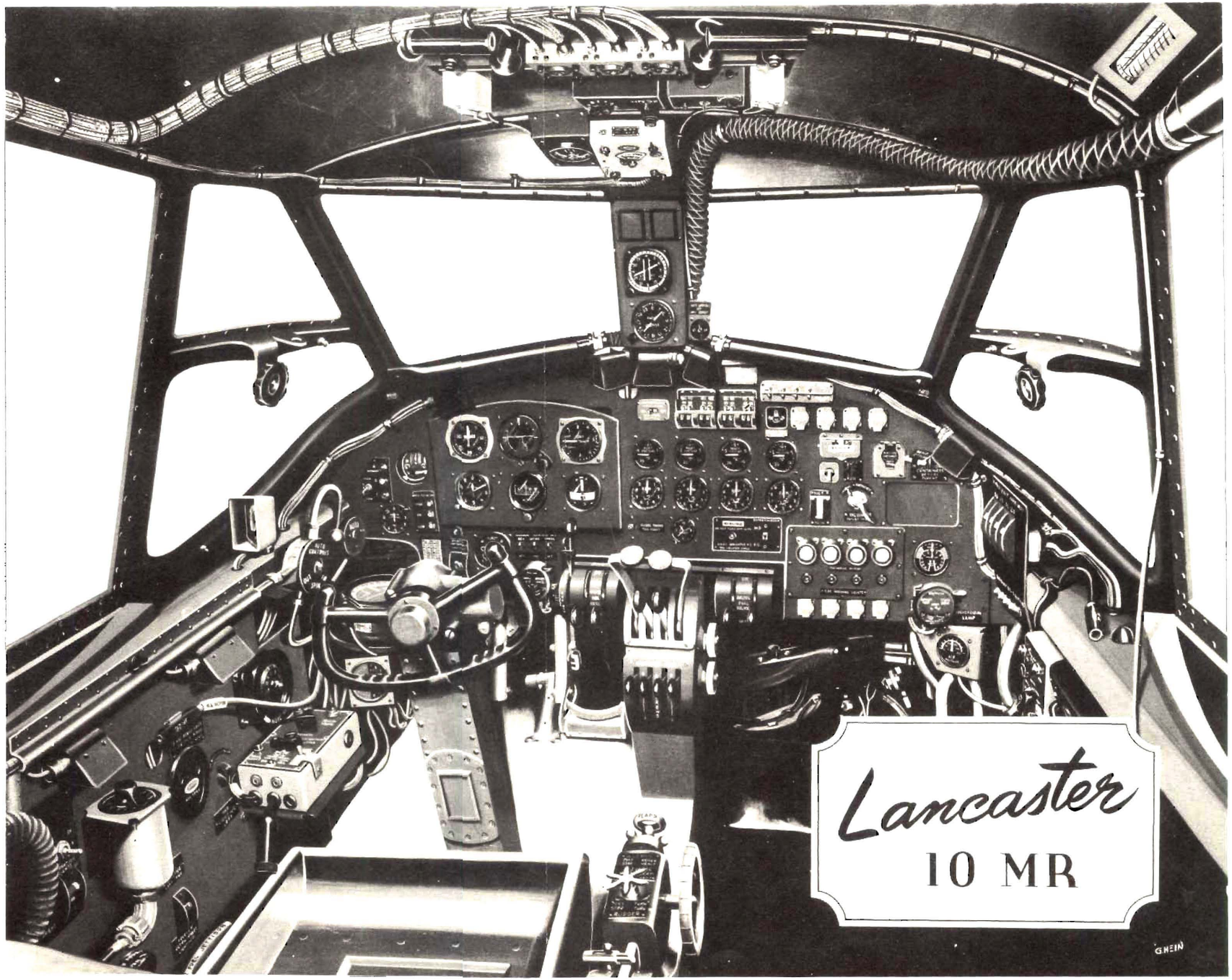

Figure 1-3 General Cockpit Layout

PUBLISHED BY AVIALOGS.COM

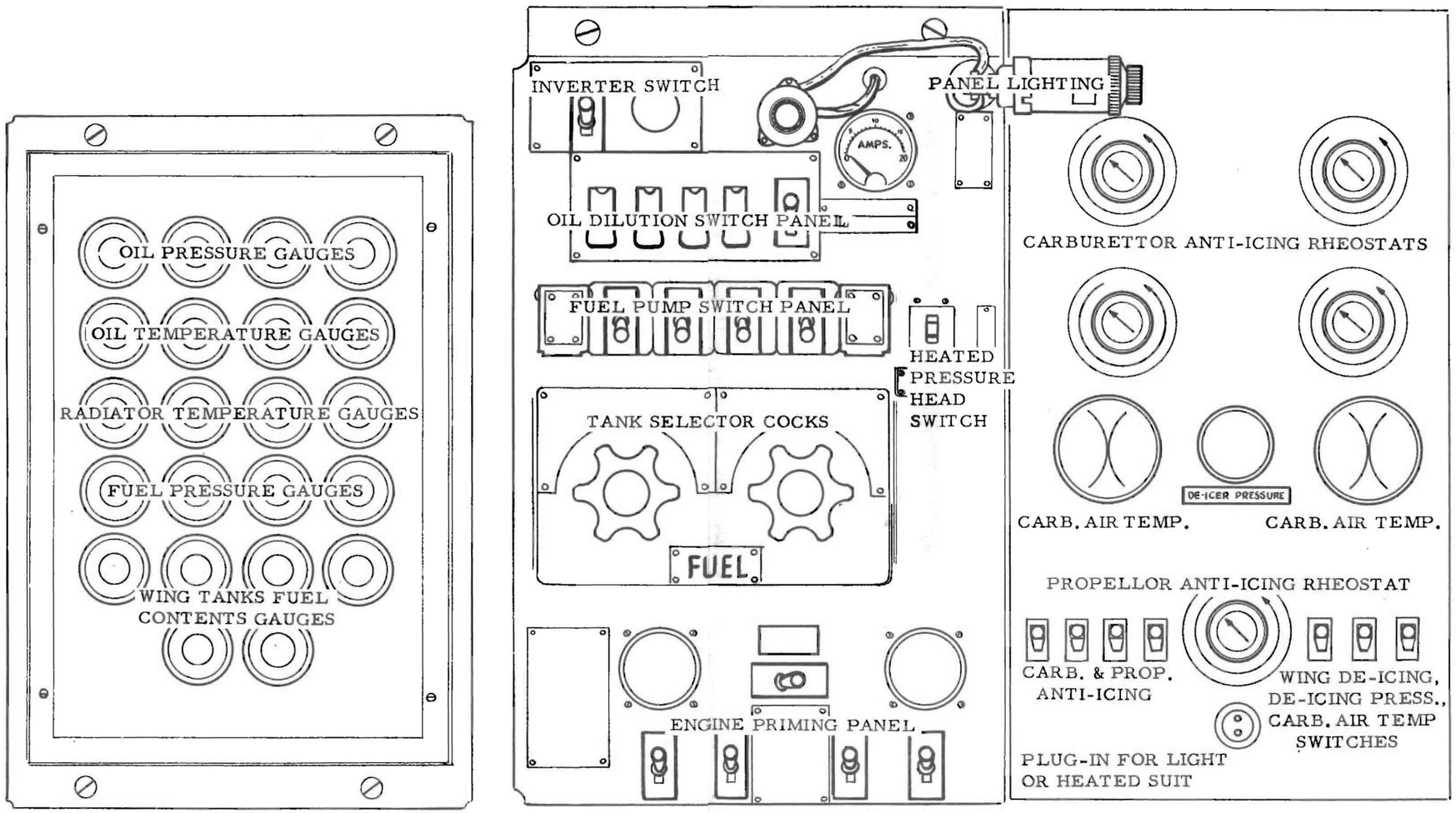

Figure 1-4 Flight Engineer's Panel

PUBLISHED BY AVIALOGS.COM

PART 2

HANDLING

PRELIMINARIES

Before Entering the Aircraft

1 Starting at the rear door, carry out an external check of the following items in a clockwise direction.

(a) Dispersal clear, fire extinguishers and chocks in position, all tires and engine covers removed, area to rear of aircraft clear for run-up.

(b) Starboard static vent plug removed.

(c) Dinghy release free, external access to first aid kits secure.

(d) Tail wheel for damage, pressure and creep. Valve free, oleo extension 3 to 5 inches.

(e) Empennage and control surfaces for obvious damage, rear turret locked central, flaps are of equal extension.

(f) Check filler caps on mainplanes.

(g) Port static vent plug removed.

(h) Port wing and control surfaces for obvious damage, outer and inner engines for external oil and coolant leaks, propellor, exhaust stubs, leading edges, navigation lights undamaged, cowling buttons secure, landing lights retracted, tank overflow pipes.

(j) Port landing gear micro switches and down locks, jury struts, oleo extension 6 to 11 inches, tire for cuts, pressure and creep, valve free, brake pipelines secure and clear of wheel, external primer secure, engine fire extinguisher bottles.

(k) Pitot head.

(l) Nose perspex.

(m) Leading edge inboard of inner engine secure.

(n) Fuel jettison cable centrally positioned and pin secure.

(p) Bomb-bay doors, tank and other contents of bomb-bay.

(q) Repeat items (n), (m), (j), (h), (g) on starboard side.

(r) Dinghy stowage in starboard mainplane secure.

After Entering the Aircraft

2 Check items as listed below:

(a) Rear turret doors closed.

(b) Rear bulkhead doors closed.

(c) Dip sticks, door key, first aid kits, axes and fire extinguishers correctly stowed.

(d) All loose equipment securely stowed.

(e) Control rods unobstructed and trim cables secure.

(f) Security of radio equipment.

(g) Escape hatches for security.

(h) Hydraulic accumulator 220 psi with slack oil.

(j) Emergency air pressure 1100 - 1250 psi.

(k) Ground/flight switch to FLIGHT.

(l) Battery cables secure, voltage over 24.

(m) Cross feed cock for freedom of movement. Leave in OFF position.

(n) Electrical panel - all circuit breaker switches ON (down) except #26. Generator charging switches OFF.

(p) Fuel contents, fuel cock operation, booster pumps (3 to 5 amps) and pitot heater.

(q) Control locks removed and stowed.

(r) Controls move freely to full extent. Adjust rudder pedals and seat.

OPERATION OF THE FUEL SYSTEM

Tank Selection

3 Structural considerations render it advisable that fuel should be kept outboard as much as possible. Therefore, the fuel system is to be operated as follows:

(a) Start up #2 tanks, switch to #1 tanks during warm-up and taxiing. Switch back to #2 tanks for run-up and take-off and continue to fly on these tanks for the first hour of flight. This allows space for carburettor venting.

(b) After the first hour select #1 tanks. When nearly empty, transfer the contents of the bomb bay tank into #1 tanks and continue to fly on them until empty.

(c) Re-select #2 tanks and use until approximately 200 gallons remain in each.

(d) Transfer contents of #3 tanks into #2 tanks.

Booster Pumps

4 The booster pumps in #1 and #2 tanks are to be used:

(a) Whenever a drop in fuel pressure is indicated. The pumps are necessary to maintain fuel pressure at approximately 17,000 ft and above.

(b) To raise the fuel pressure before starting and to assist in restarting during flight.

(c) During take-off and at all times below 1,000 ft. The pumps in both #1 and #2 tanks must be switched ON for take-off as a precaution against fuel failure as an immediate supply is then available by changing over the tank selector cock.

(d) Whenever it is necessary to run all engines from one tank by opening the cross feed cock.

(e) During all violent manoeuvers.

Testing Booster and Transfer Pumps

5 Before starting the engines, each booster and transfer pump must be tested in turn by switching to TEST position and checking the ammeter fitted on the engineer's panel for a perfectly steady reading between 3 and 5 amps. The booster pumps should be tested at all times prior to use.

STARTING PROCEDURE

Starting the Engines

6 The engines are started in the order 3, 4, 2, 1 as follows:

(a) Ensure rear door closed and ladder stowed.

(b) Turn ground/flight switch to GROUND and check ground starter battery plugged in. Turn ground/flight switch to FLIGHT if using APU for starting.

(c) Check items as indicated below:

(1) Carburettor heat control - COLD.

(2) Supercharger switches - MS.

(3) Brake pressure (minimum 130 psi), brakes on.

(4) Radiator shutters control - AUTO.

(5) RPM levers up - FULL FINE.

(6) Idle cut-off switches in ICO position.

(d) Open throttles 1/2".

(e) Select appropriate number 2 tank and turn ON master engine cock of engine to be started. Check cross feed cock OFF.

(f) Test and switch ON booster pump for #2 tank selected.

(g) Switch ON ignition and booster coil.

(h) Prime as required.

(j) Press starter button.

CAUTION

Do not operate the starter for more than 20 seconds of continuous direct cranking. Allow 30 seconds for cooling before the starter is operated again. After the second and succeeding direct cranking cycles, allow longer periods for cooling.

(k) When engine starts turn ICO switches ON.

(l) Check oil pressure. If a minimum of 30 psi is not reached in 30 seconds, shut down engine and investigate.

(m) Open throttle slowly to 1200 - 1500 rpm for warm-up.

(n) After all engines started, turn booster coil OFF, ground/flight switch to FLIGHT, generator and radio switches ON.

WARMING UP PROCEDURE

Radiator Shutters

7 The radiator shutters control switch is to be in OPEN position for all ground running.

Pressures and Temperatures

8 Check that temperatures and pressures are maintained within limits. Refer to Part 4 for engine limitations.

Cockpit Check

9 Carry out a complete cockpit check from port to starboard and from floor to roof as indicated below:

(a) Bomb doors closed.

(b) Carburettor air control for freedom of movement. Leave COLD.

(c) Fuel jettison switch NORMAL.

(d) Navigation light switch as required.

(e) Operation of windshield anti-icing pump.

(f) Automatic pilot [illegible], control OUT.

DELETED

(g) Standby compass.

(h) Radio altimeter OFF.

(j) External lights master switch as required.

(k) Identification light switches OFF.

(l) Landing lamps retracted and OFF.

(m) Instruments on the flight panel, gyros uncaged, altimeter set.

(n) Ignition switches, check mags.

(p) Boost and rpm gauges.

(q) Super charger in M Gear.

(r) Idle cut-off switch ON, in engine running position.

(s) Suction on both pumps, 3 1/2" - 5" Hg.

(t) Pneumatic pressure gauges (main and auxiliary), 200 psi minimum.

(u) Feathering buttons out.

(v) Radiator shutters as required - emergency carburettor air heat CLOSED.

(w) Landing gear lever DOWN, position indicators DOWN.

(x) Operation of flaps by lowering and raising, stopping at intermediate stages noting that the flap position indicator is functioning correctly.

(y) Pitch and throttle levers movements and tension.

(z) Boost control cut-out lever fully up.

(aa) Distant reading compass ON. Switch to SETTING for a maximum of 3 minutes only and check the operation of the compass repeaters on the pilot's panel and in the navigator's position.

Radio Check

10 Turn on the radio sets and check the following:

(a) The VHF frequencies that can be checked locally; one

(b) One point on each dial of the HF command set.

(c) One point on each frequency hand of the liaison set.

(d) The interphone set for functioning at all crew stations.

TAXIING PROCEDURE

Pre-Taxiing Check

11 Before taxiing, check the following:

(a) Radiator shutter switches OPEN.

(b) Brakes pressure - sufficient for safe taxiing.

(c) Chocks removed.

(d) Set 1000 rpm on inner engines.

Taxiing

12 As soon as possible after starting the aircraft to move, check the brake action and during taxiing check the gyro flight instruments. The following points should be observed when using the brakes.

(a) Use short, reasonably hard applications of brakes rather than lighter, longer applications.

(b) Slow aircraft down frequently rather than maintain a slow pace with constant braking.

(c) When slowing down with brakes, throttle back and then adjust throttles again afterwards.

(d) After landing, check that brakes are working and then use the full length of the runway to stop, letting the aircraft slow down itself as much as possible before further use of brakes.

ENGINE AND ACCESSORY CHECK

Testing the Engines and Superchargers

13 The engines are run-up and tested in the same order as for starting as follows:

(a) Ensure that minimum temperature and pressures have been reached for run-up.

(b) Open the radiator shutters and check that coolant temperatures are not exceeded during run-up.

(c) Test each magneto at 1500 rpm.

(d) Open up all four engines together to 0 psi boost and check superchargers. The rpm should drop and boost increase when FS blower is engaged and red warning light came on. Return to MS ratio.

(e) At same boost, exercise the CSU at least twice by moving the speed control lever through its full range. With control lever fully down, rpm should fall to 1800 rpm.

(f) Check that the generators are charging.

(g) Check carburettor heat controls. Note drop in boost and rise in carburettor intake temperature.

(h) Open throttle to take-off position and note boost and rpm. Normal indications are plus 9 psi boost and 2850 - 3000 rpm.

(j) Close throttle to plus 7 psi boost and test magnetos. The drop must not exceed 150 rpm.

(k) Throttle fully back and check slow running; 700 - 900 rpm.

(l) Open throttle to idle at 1200 - 1500 rpm.

TAKE-OFF PROCEDURE

14 Vital actions before take-off.

H - Harness and hatches secure, bomb doors closed.
Hydraulic and pneumatic pressure normal.

T - Trim, Elevator 3 - 4 nose heavy, rudder and aileron neutral.
Throttle tension adjusted correctly.

M - Mixture - carburettor air intake COLD.

P - Pitch, fully fine.

F - Fuel - check quantity in tanks and pressure selection to number 2 tanks all booster pumps ON and master cocks ON.

F - Flaps, 15° - 20° down.

G - Gills - radiator shutters automatic.

G - Gyros uncaged. Check directional indicator and check distant reading compass on normal.

S - Switches - Main switches ON, ICO's - ON Supercharger MS gear, pitot heater as required.

Take Off

15 Take-off is as follows:-

(a) Align the aircraft carefully on the runway, making certain that the tailwheel is straight. Put brakes on.

(b) Warn crew "Ready for take-off".

(c) Open up to 0 psi boost against the brakes to check that all four engines are responding evenly.

(d) Release the brakes gently and open the throttles slowly to the take-off position.

(e) Keep straight by coarse use of the rudder and by differential use of throttles.

(f) As speed is gained, ease the control column forward to raise the tail.

(g) Lift aircraft off ground at 95k (fully loaded 105k).

(h) When safely airborne, apply brakes and order "Landing gear up" with approved hand signal.

(j) Allow safety speed to build up (130k for light load, increase for heavier loads).

(k) When safety speed reached, order 2850 rpm.

(l) Climb at 140k and when at 300 feet raise flaps in 10° stages, retrim.

(m) Throttle back to plus 7 and reduce rpm to 2650.

Vital Actions after Take-Off

16 Proceed as follows:-

B - Brakes - Stop wheels spinning.

U - Undercarriage up.

M- Mixture - Carburettor air if required.

P - Power setting as required.

F - Flaps raised by stages.

F - Fuel - Booster pumps off above 1000 feet.

Control of Carburettor Heat

16A Air intake temperatures between +20°C and -10°C should be avoided at all times as this is the range where carburettor icing is most likely to occur. If loss of power or engine roughness is evident and carburettor icing is suspected, emergency hot air and/or induction alcohol should be used and continued only until the loss of power is restored or roughness disappears. Induction icing can be induced rather than avoided if hot air is used at an OAT below -10°C which would bring the air intake elbow temperature into the critical icing range.

FLYING CHARACTERISTICS

17 The following characteristics are applicable to the flying controls on Lancaster X aircraft.

Rudders

(a) Become heavy at high speeds.

Ailerons

(b) The ailerons are light and effective but become heavy at speeds over 225 kts and when aircraft is heavily loaded.

Elevators

(c) The elevators are relatively light and effective but tend to become heavy in turns.

Trim Tabs

(d) All trim tabs are powerful and sensitive and must be used with care.

Stability

18 At normal loadings and speeds stability is satisfactory. At loads above 67,000 lb there is a tendency for the aircraft to wallow. It is not advisable to attempt to correct this as use of the controls may aggravate it.

Change of Trim

19 Change of trim is as follows:

(a) Landing gear up - nose slightly up.

(b) Landing gear down - nose slightly down.

(c) Flaps up to 20° - strongly nose down.

(d) Flaps down to 20° - strongly nose up.

(e) Flaps fully down from 20° - slightly nose up.

(f) Bomb doors open - slightly nose up.

Slow Flying

20 For flying at reduced air speed, flaps may be lowered about 20°, rpm set as 2650 and the speed reduced to about 115 kts.

Stalling

21 There is little warning of the approach of the stall except for a slight buffeting of the tail which may be felt some 5k before the stall itself. At the stall the nose drops gently. Recovery is straight forward and easy.

(a) The approximate stalling speeds are:

Power off	at 60,000	at 65,000
Landing gear and flaps up	95k	105k
Landing gear and flaps down	80k	85k
Power on (21bs boost 2850 rpm)		
Landing gear and flaps down	70k	75k

High Speed Stall

(b) Adequate warning of the approach. If a stall in a turn is given by strong rudder and elevator buffeting. At the stall the inner wing and nose drop gently together. Recovery is immediate on pushing the control column forward.

Spinning

22 Practice spinning in Lancaster 10MR aircraft is strictly prohibited. If an inadvertent spin occurs, recovery is normal, but attention should be given to the wing loading during the pull-out.

WARNING

If an uncontrollable spin is allowed to develop below 5,000 feet abandon the aircraft.

Diving

23 There is a strong nose down change of trim as speed is gained in the dive. It is possible to recover from dives to the limiting speed without the assistance of the elevator trimming tabs even if the aircraft has been trimmed into the dive. If the elevator trimming tab is used it should be applied with care, since it is powerful and sensitive. The elevator trimming tab should never be used to assist entry, but should be used to reduce the very heavy pull force otherwise necessary for recovery.

Aerobatics

24 All aerobatic manoeuvers are prohibited.

PRACTICE FEATHERING IN FLIGHT

Feathering

25 The number of practice featherings to be carried out on any one flight should be limited, and practice feathering and unfeathering is prohibited if the outside air temperature is below -15°C (5°F).

(a) Booster pump ON.

(b) Close the throttle and push rpm lever to minimum.

(c) Press the feathering pushbutton and hold

it in only long enough to ensure that it stays in by itself; then release it so that it can spring out when feathering is complete.

(d) Turn master fuel cock to OFF.

(e) Switches and idle cut-off in OFF position when propellor has stopped.

Unfeathering

26 Do not unfeather at speeds above normal cruising speed to avoid the risk of overspeeding. The following sequence is to be used for unfeathering propellors:

(a) Throttle and rpm set to minimum.

(b) Turn master fuel cock to ON.

(c) Switches ON.

(d) Press the feathering push button and hold until rpm reaches 800 to 1000.

(e) Put on idle cut-off.

(f) Bring rpm and boost up to other engines slowly.

NOTE

If the propellor does not return to normal constant speed operation it must be refeathered and then unfeathered again releasing the button at a slightly higher rpm.

AUTOMATIC PILOT OPERATING PROCEDURES

Ground Check

27 To carry out ground che[DELETED] s follows:

(a) Set clutch to IN[DELETED]. move controls through compl[DELETED] nsure clutches in servo motor[DELETED].

(b) W[DELETED] running (automatic pilot is op[DELETED] pressor on #2 engine) check pr[DELETED] and air pressure gauge; Mini-[DELETED] maximum 60 psi.

(c) Place control cock to SPIN positi[DELETED]

(d) Check control switch OFF, pitch[DELETED] set at 0.

(e) After 5 minutes place contr[DELETED] to IN position. There will be a momen[DELETED] t in controls as autopilot takes over. Ch[DELETED] sion on controls by attempting to move[DELETED]

(f) Move pitch control to va[DELETED] ttitude conditions; elevator control s[DELETED] move in conjunction with selection.

(g) Check aileron control[DELETED] ting COMPASS on control switch and[DELETED] new course on DRC with pointer. Aile[DELETED] ntrol should turn to correct for new set[DELETED] heck aileron control similarily on JINK[DELETED]

(h) When the check i[DELETED] ete select control cock to OUT, leav[DELETED] lever IN.

Flight Operation[DELETED]

28 Flight operati[DELETED] s follows:

(a) Place cont[DELETED] k to SPIN position, check pressure 4[DELETED] si.

(b) Trim air[DELETED] or level flight.

(c) Pitch c[DELETED] at 0.

(d) Contr[DELETED] ch on DR repeater to the COURSE po[DELETED] on DRC to present course position.[DELETED]

(e) Af[DELETED] trol cock in SPIN for approximately 5[DELETED] s, place to IN.

(f) [DELETED] pitch control to maintain level flight.

(g) [DELETED] hange attitude of aircraft set desire[DELETED] of climb or descent on pitch control, res[DELETED] riginal position on reaching new altit[DELETED]

([DELETED] For a change of course up to 15°, set [DELETED] on DR to new course, Aircraft will [DELETED] bank to new course position.

[DELETED] For a change in course of over 15°, or [DELETED] n a rapid turn is necessary, select JINK

on control switch, set pointer to new co
At approximately 5° before new course i
ed, switch control back to COMPASS
prevent the aircraft from oversho se
and wandering before autopilot .tain
full control. It will be found th hours
flying it will be necessarv age auto-
matic pilot and retrim ecause de-
crease in weight by us

Autom uld be off for all operations feet above ground. Pressu in pilot's position indicates pounds.

LANDING PROCEDURE

Before Joining Circuit

29 Before joining circuit proceed as follows:

(a) Warn crew "Prepared for Landing".

(b) Automatic pilot control cock - out (or spin).

(c) Trailing aerial - in.

(d) Reduce airspeed to 150k.

(e) Leading edge de-icers - OFF.

Downwind Leg

30 Join the downwind leg at 130 knots and check the following:

G - Gas - on fullest tank, pressure adequate, booster pumps ON.
Gills - radiator shutters on AUTOMATIC

B - Brakes - check pressure.

U - Undercarriage down - check indicators.

M - Mixture - carburettor intake controls COLD.

P - Pitch 2650.

F - Flaps, 20 degrees.

H - Harness secure.

S - Supercharger in MS gear.

Crosswind Leg

31 On crosswing leg reduce to 125 knots and check the following:

U - Undercarriage - test horn by closing throttles on inner engines.

P - Pitch 2850.

F - Flaps as required.

Final Approach

32 Turn into wind, reducing to 110 - 115 knots, approaching over the fence at 100 knots and over the button at 90 knots. The approach speed should be increased by 5 knots for a glide approach or when no flaps are used and should be increased by 10 knots when aircraft at overload landing weight of 63,000 lb.

Normal Landing

33 Under normal circumstances, it is recommended that the aircraft be landed in the three-point attitude using full flaps.

Crosswind Landing

34 Wheel landings are recommended for strong cross-winds or severe tubulence.

Mislanding

35 In the event that it becomes necessary to take over shoot action, proceed as follows:

(a) The aircraft will climb satisfactorily with the landing gear and flaps down.

(b) Open throttles - (2nd pilot holds throttles open and tightens tension).

(c) Landing gear "UP".

(d) When landing gear up raise flaps to 40°.

(e) If overshooting with flaps at 30° speed 120 kts or more use plus 9 boost. If speed is below 120 kts (full flaps selected) open throttles to plus 14 boost. When flaps are up to 40° and speed 120 kts or more then reduce boost to plus 9.

(f) At safe height (300 feet) complete raising of flaps in 10° stages.

(g) Throttle back to plus 7 boost and 2650 rpm, maintain speed 140 kts.

Three Engine Overshoot

36 Proceed as follows:

(a) Open throttles to plus 9 if airspeed is below 120 kts, and plus 14 if airspeed above 120 kts, subject to being able to keep the aircraft straight (2nd pilot holds throttles and tightens tension).

(b) Landing gear UP.

(c) At 300 feet when airspeed is above 120 kts raise flaps in 10° stages.

(d) Throttle back plus 7 and 2650 rpm for climbing away at 140 kts.

NOTE

For practice purposes the 4th engine will not be feathered and the overshoot started above 600 feet.

Vital Actions after Landing

37 Come to full stop clear of runway and check:

G - Gills - Radiator shutters open.

G - Gas - Booster pumps off - Pitot heat off.

P - Pitch - fully fine.

F - Flaps - up.

B - Brakes - check pressure for taxiing.

T - Trim - to take-off position.

END OF FLIGHT PROCEDURE

Oil Dilution

38 The correct dilution period for this aircraft is:

Air Temperature above -10°C One Minute

Air Temperature below -10°C Two Minutes

Stopping the Engines

39 After reaching the ramp the engines are to be stopped in the following manner:

(a) Chocks in position.

(b) Check air pressure.

(c) Check [illegible] boost.

DELETED

(d) Open up all four engines to not more than 0 psi boost, change to FS ratio and run for 30 seconds. Change back to MS ratio, check mags, then throttle back slowly and idle the engines for a short period at 1000 - 1200 rpm.

(e) Before stopping the engines, open the bomb doors.

(f) Switch off all booster pumps before stopping engines.

(g) Stop engines (except for #2) by putting Idle Cut-Off switches in ICO position.

(h) When the other three engines have stopped, test hydraulic pump on #2 engine by lowering flaps.

(j) When engines have stopped.
Ignition OFF
Fuel turned OFF
Engine master cocks OFF

(k) Radiator shutters AUTOMATIC.

(l) Return the slow running cut-out switches (ICO) to the ENGINE RUNNING position.

(m) Check all other switches are off and gyros are caged.

(n) Switch off all electrical switches and turn master electrical switch to GROUND.

•

NOTE

If the slow-running cut-out switches are left in the idle cut-off position or the radiator shutters over-ride switches are left in the OVER-RIDE position, the rams will return to the ENGINE RUNNING and AUTOMATIC position respectively as soon as the master switch is turned to GROUND. Then, if any ground maintenance work is carried out which necessitates turning on and off the master switch, the rams are being continually operated.

Before Leaving the Aircraft

40 If the aircraft is to be left standing for long periods, check the following:

(a) Landing gear selector lever - DOWN.

(b) Flaps selector lever - UP.

(c) Gills - Radiator shutters automatic.

(d) Parking Brakes - OFF.

(e) Undercarriage safety struts inserted.

(f) Chocks placed in front of and behind each main wheel.

(g) Surface controls locks in position.

PART 3

EMERGENCY HANDLING

EMERGENCY TAKE-OFF

1 For take-offs from small airfields and short runways, line up the aircraft on the take-off path, apply brakes, lower 1/4 flap and then open up throttles to full take-off manifold pressure. Release the brakes evenly and take-off straight ahead.

ENGINE FAILURE PROCEDURES

Feathering

2 Feathering procedure in the event of an engine failure on take-off or in flight is the same as the procedure outlined in Part 2 Para 25, Practice Feathering in Flight.

Failure During Take-off

3 If the aircraft is airborne and safety speed reached, it will normally climb on 3 engines at 125 knots. Because of torque and slipstream effects, the aircraft tends to swing to the left. Hence, failure of #1 engine is the worst condition. Safety speed for normal loading using plus 9 boost and 3000 rpm is 120 knots. It goes up to 145 knots for a gross weight of 65,000 lbs when using plus 18 boost. For further details of engine failure procedures see Part 6, Chapter 7 of EO 05-1-1, Pilot's Operating Instructions General.

Failure in Flight

4 If an engine is stopped, air may be drawn into the fuel system through the carburettor of the failed engine. To prevent this, the master fuel cock must be turned off before feathering, unless the booster pump for the tank in use is on. If an engine seizes up, its master fuel cock should be turned off immediately to ensure that the fuel supply to the other engine on the same side is not affected. If the failed engine cannot be made to pick up again, feather its propellor, switch off and set mixture control to IDLE CUT-OFF.

HANDLING WITH ASYMMETRIC POWER

Handling on Three Engines

5 The aircraft will maintain height at full load on any three engines at 10,000 feet and can be trimmed to fly without foot load. Maintain at least 125 knots.

Handling on Two Engines

6 It should be possible to maintain height below 10,000 feet at 120 knots on any two engines after release of bombs and with half fuel used; but with two engines dead on one side, the foot load will be very heavy.

Fuel System

7 The cross-feed cock should only be turned on when it is desired to feed fuel from tanks on one side of the aircraft to engines on the other side. In this case, all live engines should be fed from one tank and the fuel booster pump for this tank should be on. The fuel selector for the tanks on the other side of the aircraft should be off. At all other times, the cross-feed cock should be off.

MAIN SERVICE EMERGENCY PROCEDURES

Flaps

8 After lowering the landing gear by pulling the emergency air toggle the flaps may be lowered by operating the flaps control, which admits the air pressure to the flaps system. The flaps can be raised again, but there may

not be sufficient air pressure to lower the flaps a second time; furthermore, it may cause the header tank to burst. If it is absolutely necessary to raise the flaps by emergency method, extreme care must be taken to raise them slowly by stages. If the flaps are lowered by the emergency method before landing, they must be left down after landing, owing to the likelihood of bursting the header tank.

Landing Gear

9 If the hydraulic system fails the landing gear can be lowered by compressed air from special bottles, irrespective of the position of the landing gear lever. The control for working the air system is on the bulkhead to the rear of the flight engineer's panel. The landing gear cannot be raised again by this method. Although the landing gear will lower by this method irrespective of the position of the selector the landing gear lever must be selected DOWN for landing and left in the down position after landing, except in cases where the landing gear selector cannot be moved through mechanical defect. Otherwise, any leakage of air pressure may cause the landing gear locks to be released and the landing gear to collapse.

NOTE

The flap selector should be neutral before using the landing gear emergency air system.

LANDING WITH ASYMMETRIC POWER

Three Engine Landing

10 Lowering flaps to 20° and of undercarriage may be carried out as normally on the circuit but further lowering of the flaps should be left until final straight approach, which should be made at a speed of 120 to 125 kts using as little power as possible, and rudder trim should not be wound off until definitely committed to landing. Use all good engines to regulate approach.

Two Engine Landing

11 A left-hand circuit can safely be made, and is recommended, irrespective of which engines have failed. Keep extra height in hand, if possible, and lower the undercarriage as late as practicable, ensuring that it is locked down just before commencing the straight approach to the airfield. The flaps may be lowered 20° before the undercarriage is lowered but they should not be lowered further until it is clear that the airfield is within easy reach.

CRASH LANDING PROCEDURE

12 For a wheels up landing turn switches off and place propellors in coarse pitch. Three push-out panels are fitted in the roof; one above the pilot, one just forward of the rear spar and one at the former mid turret position. Refer to EO 05-1-1 Part 6, Chapters 10 and 11.

DINGHY AND DITCHING DRILL

13 The flaps should be lowered 30° for ditching, but if the flaps will not lower by the hydraulic system do not attempt to lower them by the compressed air system, as this will also cause the undercarriage to lower.

(a) A dinghy stowed in the starboard wing may be released and inflated as follows:

(1) From inside by pulling the release cord running along the fuselage roof aft of the rear spar.

(2) From outside by pulling the loop on the starboard side, aft of the main entrance door.

(3) Automatically by an immersion switch.

NOTE

Correct procedure for dinghy drill and ditching is to be carried out as laid down in EO 05-1-1 Part 6 Chapter 12.

ACTION IN EVENT OF FIRE

Engine Fire

14 Each engine is provided with a fire extinguisher bottle which is operated by a push-button on the pilot's instrument panel. The fire extinguishers are also operated automatically by a crash switch on the starboard side of the nose. Procedures should be followed as detailed in EO 05-1-1 Part 4, Chapter 2.

Mainplane Fire

15. If a fire occurs in the mainplane for reasons other than the spreading of a fire originating from the engines, attempt to extinguish the fire by side-slipping the aircraft away from the wing afire. If this manoeuver is not successful, abandon the aircraft by parachute while the aircraft is still under control. A possible cause of such a fire may be a short circuit in the electrical wiring in which case ensure that the switches which control all the lights within the wing are turned off.

Cabin Fire

16 Use the hand fire extinguishers on the fire. When the fire is extinguished immediately open the windows and the cold air intake valve controls.

NOTE

Stand as far away from the fire as possible. The fire extinguishers have an effective range of 20 feet. The extinguisher fluid (carbon tetrachloride) when sprayed on a fire, produces phosgene, a poisonous gas.

ABANDONING THE AIRCRAFT

17 Pilot's Notes General, EO 05-1-1, Part 6 Chapter 10 and 13, lay down the instructions to be followed for abandoning aircraft, using the parachute exits described in Part 1, para 107.

PART 4

OPERATING DATA

FLYING LIMITATIONS

1 The aircraft is designed for manoeuvers appropriate to a heavy bomber and care must be taken to avoid imposing excessive loads with the elevators in recovery from dives and in turns at high speed. Spinning and aerobatics are not permitted. Violent use of the rudder at high speeds should be avoided. Speed and weight limitations are as follows:

(a) Maximum Speeds

Diving	315k
Bomb Door Open	315k
Landing Gear Down	175k
Flaps Down	175k
Dropping 4" AR Flares	180k

(b) Maximum Weights

Max permissible for take-off 65,000 lbs

Max permissible for landing 55,000 lbs

ENGINE LIMITATIONS

2 For the Merlin 224, the principal limitations with 100 octane fuel are as follows:

	RPM	MP (psi)	TEMPERATURE °C	
			COOLANT	OIL
Max Take-Off to 1,000 Feet	3000	plus 18	120°	85°
Max Climb 1 Hour Limit	2850	plus 9	120°	85°
Max Continuous	2650	plus 7	120°	85°
Combat 5 Minute Limit	3000	plus 18	120°	85°

Figure 4-1 Engine Limitations Table

Oil Pressure - Minimum In Flight 60 lbs sq in

Oil Temp - Minimum For Take-OFF plus 15°C

Coolant Temp- Minimum For Take-OFF plus 60°C

FUEL CONSUMPTION

3 The following figures are the approximate total gallons per hour for the aircraft and apply in MS ratio at 5,000 feet and FS ratio at 15,000 feet one gallon per hour should be added for every 1,000 feet above these heights.

Boost (psi)	RPM					
	2850	2650	2400	2200	2000	1800
+9	420					
+7		240	235	217	200	
+4		216	204	196	180	
+2		196	184	176	164	
0		172	164	156	144	128
-2		148	140	128	124	112
-4		124	120	108	104	96

Figure 4-2 Fuel Consumption Chart

MAXIMUM PERFORMANCE

Climb

4 The maximum climbing performance is achieved at the following speeds.

(a) 140 knots to 12,000 feet.

(b) 135 knots from 12,000 feet to 18,000 feet.

(c) 130 knots from 18,000 feet to 22,000 feet.

(d) 125 knots above 22,000 feet.

(e) Change to FS ratio when boost has fallen to plus 6 psi.

Combat

5 Use FS ratio if the boost obtainable in MS ratio is more than 3 psi below the maximum combat boost.

MAXIMUM RANGE

Climb

6 For maximum range, climb at 140 knots at plus 7 psi boost and 2650 rpm. Change to FS ratio when maximum boost obtainable in MS ratio has fallen by 3 psi.

Cruise

7 Fly in MS ratio at maximum obtainable boost not exceeding plus 7 psi, obtaining the recommended airspeed by reducing rpm which may be as low as 1800 if this will give the recommended speed. Higher speeds than those recommended may be used if obtainable in MS ratio at the lowest possible rpm. Engage FS ratio when the recommended speed cannot be maintained at 2500 rpm in MS ratio. The recommended speeds are:

(a) Fully loaded (outward journey):
Up to 15,000 feet 150 knots
At 20,000 feet in FS ratio 140 knots

(b) Lightly loaded (homeward journey):
140 knots