TM 1-1510-225-10

TECHNICAL MANUAL

OPERATOR'S MANUAL FOR ARMY C-12R AIRCRAFT

NSN 1510-01-425-1355

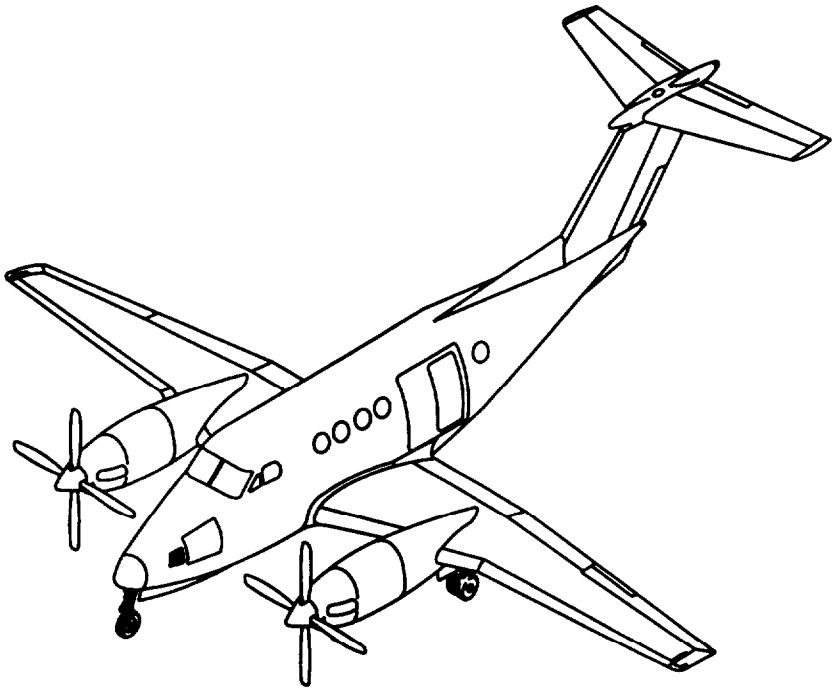

DISTRIBUTION STATEMENT A: APPROVED FOR PUBLIC RELEASE, DISTRUBUTION is UNLIMITED

HEADQUARTERS, DEPARTMENT OF THE ARMY

10 JUNE 1998

A958W00C0466 C

URGENT

TM 1-1510-225-10
C1

CHANGE

NO. 1

HEADQUARTERS
DEPARTMENT OF THE ARMY
WASHINGTON, D.C., 08 February 1999

TECHNICAL MANUAL

OPERATOR'S MANUAL
FOR
ARMY C-12R AIRCRAFT
NSN 1510-01425-1365

DISTRIBUTION STATEMENT A: Approved for public release; distribution Is unlimited.

TM 1-1510-225-10, dated 10 June 1998, is changed as follows:

1. Remove and insert pages **as** indicated below. New or changed text material is indicated by vertical bar in the margin. An illustration change is indicated by a miniature pointing hand.

Remove Pages	Insert Pages
2-1 through 2-6	2-1 through 2-6
2-15 and 2-16	2-15 and 2-16
2-29 and 2-30	2-29 and 2-30
2-35 and 2-36	2-35 and 2-36
3-1 through 3-6	3-1 through 3-6
—	3-6.1 through 3-6.6
Index-1 and Index-2	Index-l and Index-2

2. Retain this sheet in front of manual for reference purposes.

By Order of the Secretary of the Army:

DENNIS J. REIMER
General, United States Army
***Chief of* Staff**

Official:

JOEL B. HUDSON
Administrative Assistant to ***the***
Secretary of the Army
05294

DISTRIBUTION:
To be distributed in accordance with Initial Distribution Number (ION) 313764, requirements for TM 1-1510-225-10.

WARNING PAGE

Personnel performing operations, procedures, and practices which are included or implied in this technical manual shall observe the following warnings. Disregard of these warnings and precautionary information can cause serious injury or loss of life.

NOISE LEVELS

Sound pressure levels in this aircraft during some operating conditions exceed the Surgeon General's hearing conservation criteria, as defined in TB MED 501. Hearing protection devices, such as the aviator helmet or ear plugs, shall be worn by all personnel in and around the aircraft during its operation.

STARTING ENGINES

Operating procedures or practices defined in this technical manual must be followed correctly. Failure to do so may result in personal injury or loss of life.

Exposure to exhaust gases shall be avoided since exhaust gases are an irritant to eyes, skin, and respiratory system.

HIGH VOLTAGE

High voltage is a potential hazard around AC inverters, ignition exciter units, and strobe beacons.

USE OF FIRE EXTINGUISHERS IN CONFINED AREAS

Monobromotrifluoromethane (CF_3Br) is very volatile, but is not easily detected by its odor. Although non toxic, it must be considered to be about the same as other refrigerants and carbon dioxide, causing danger to personnel primarily by reduction of oxygen available for proper breathing. During operation of the fire extinguisher, ventilate personnel areas with fresh air. The liquid shall not be allowed to come into contact with the skin, as it may cause frostbite or low temperature bums because of its very low boiling point.

VERTIGO

The strobe beacon lights should be turned off during flight through clouds to prevent sensations of vertigo, as a result of reflections of the light on the clouds.

CARBON MONOXIDE

When smoke, suspected carbon monoxide fumes, or symptoms of lack of oxygen (hypoxia) exist, all personnel shall immediately don oxygen masks, and activate the oxygen system.

FUEL AND OIL HANDLING

Turbine fuels and lubricating oils contain additives which are poisonous and readily absorbed through the skin. DO not allow them to remain on skin.

SERVICING AIRCRAFT

When conditions permit, the aircraft shall be positioned so that the wind will carry fuel vapors away from all possible sources of ignition. The fueling unit shall maintain a distance of 20 feet between unit and filler point. A minimum of 10 feet shall be maintained between fueling unit and aircraft.

Prior to refueling, the hose nozzle static ground wire shall be attached to the grounding lugs.

SERVICING BATTERY

Improper service of the nickel-cadmium battery is dangerous and may result in both bodily injury and equipment damage. The battery shall be serviced in accordance with applicable manuals by qualified personnel only.

Battery electrolyte (potassium hydroxide) is corrosive. Wear rubber gloves, apron, and face shield when handling batteries. If potassium hydroxide is spilled on clothing, or other material, wash immediately with clean water. If spilled on personnel, immediately start flushing the affected area with clean water. Continue washing until medical assistance arrives.

JET BLAST

Occasionally, during starting, excess fuel accumulation in the combustion chamber causes flames to be blown from the exhausts. This area shall be clear of personnel and flammable materials.

RADIOACTIVE MATERIAL

Instruments contained in this aircraft may contain radioactive material (TB 55-1510-314-25). These items present no radiation hazard to personnel unless seal has been broken due to aging or has accidentally been broken. If seal is suspected to have been broken, notify Radioactive Protective Officer.

RF BURNS

Do not stand near the antennas when they are transmitting.

OPERATION OF AIRCRAFT ON GROUND

At all times during a towing operation, be sure there is an authorized person in the cockpit to operate the brakes.

Personnel should take every precaution against slipping or falling. Make sure guard rails are installed when using maintenance stands.

Engines shall be started and operated only by authorized personnel. Reference AR 95-1.

Ensure that landing gear control handle is in the DN position.

TECHNICAL MANUAL

No. 1-1510-225-10

HEADQUARTERS
DEPARTMENT OF THE ARMY
WASHINGTON, D.C., 10 JUNE 1998

OPERATOR'S MANUAL FOR ARMY C-12R AIRCRAFT

NSN 1510-01-425-1355

REPORTING OF ERRORS AND RECOMMENDING IMPROVEMENTS

You can help improve this manual, If you find any mistakes or if you know of any way to improve these procedures, please let us know. Mail your letter, DA FORM 2028 (Recommended Changes to Publications and Blank Forms), or DA Form 2028-2 located in the back of this manual direct to: Commander, U.S. Army Aviation and Missile Command, ATTN: AMSAM-MMC-LS-LP, Redstone Arsenal, AL 35898-5230. A reply will be furnished to you. You may also send in your comments electronically to our .e-mail address: ls-lp@redstone.army.mil or b fax 205-842-6546/DSN 788-6546. lnstructions for sending an electronic 2028 may be found at the back of this manual immediately preeding the hard copy 2028.

DISTRIBUTION STATEMENT A: Approved for public release; distribution is unlimited.

TABLE OF CONTENTS

CHAPTER 1
INTRODUCTION

1-1. GENERAL.

These instructions are for use by the operator(s). They apply to the C-12R aircraft.

1-2. WARNINGS, CAUTIONS, AND NOTES.

Warnings, cautions, and notes are used to emphasize important and critical instructions. Explanatory examples are as follows:

WARNING

An operating procedure, practice, etc., which, if not correctly followed, could result in personal injury or loss of life.

CAUTION

An operating procedure, practice, condition, or statement which, if not strictly observed, could result in damage to or destruction of equipment, loss of mission effectiveness, or long term health hazards to personnel.

NOTE

An operating procedure, condition, etc., which is essential to highlight.

1-3. DESCRIPTION.

This manual contains the best operating instructions and procedures for the C-12R aircraft under most circumstances. The observance of limitations, performance, and weight/balance data provided is mandatory. The observance of procedures is mandatory except when modification is required because of multiple emergencies, adverse weather, terrain, etc. Basic flight principles are not included. THIS MANUAL SHALL BE CARRIED IN THE AIRCRAFT DURING ALL FLIGHTS.

1-4. APPENDIX A, REFERENCES.

Appendix A is a listing of official publications, cited within this manual, which are applicable to and available for flight crews.

1-5. APPENDIX B, ABBREVIATIONS AND TERMS.

Appendix B is a listing of abbreviations and terms used throughout this manual.

1-6. APPENDIX C, NOT APPLICABLE.

1-7. INDEX.

The index lists, in alphabetical order, titled paragraphs, figures, and tables contained in this manual.

1-8. ARMY AVIATION SAFETY PROGRAM.

Reports necessary to comply with the safety program are prescribed in AR 385-40.

1-9. DESTRUCTION OF ARMY MATERIEL TO PREVENT ENEMY USE.

For information concerning destruction of Army materiel to prevent enemy use, refer to TM 750-244-1-5.

1-10. FORMS AND RECORDS.

Army aviators flight record and aircraft maintenance records which are to be used by crew members are prescribed in DA PAM 738-751 and weight and balance manual TM 55-1500-342-23.

1-11. EXPLANATION OF CHANGE SYMBOLS.

Except as noted in this paragraph, changes to text and tables, including new material on added pages, are indicated by a vertical line in the outer margin extending close to the entire area of the material affected.

NOTE

Pages with emergency markings, which consist of black diagonal lines around three edges, may have the vertical line or change symbol placed along the inner margins.

A miniature pointing hand symbol is used to denote a change to an illustration. However, a vertical line in the outer margin, rather than miniature pointing hands, is utilized when there have been extensive changes made to an illustration. Change symbols show current changes only. Change symbols are not utilized to indicate changes in the following:

a. Introductory material.

b. Indexes and tabular data where the change cannot be identified.

c. Blank space resulting from the deletion of text, an illustration or a table.

d. Correction of minor inaccuracies, such as spelling, punctuation, relocation of material, etc., unless correction changes the meaning of instructive information and procedures.

1-12. AIRCRAFT DESIGNATION SYSTEM.

The designation system prescribed by AR 70-50 is used in aircraft designations as follows:

EXAMPLE C-12R

C - Basic mission and type symbol (Cargo)

12 - Design number

R - Series symbol

1-13. USE OF WORDS SHALL, SHOULD, AND MAY.

Within this technical manual the word “shall” is used to indicate a mandatory requirement. The word “should” is used to indicate a nonmandatory but preferred method of accomplishment. The word “may” is used to indicate an acceptable method of accomplishment.

1-14. PLACARD ITEMS.

Where applicable, placarded items (switches, controls, etc.) are shown, throughout this manual, in boldface capital letters.

CHAPTER 2
AIRCRAFT AND SYSTEMS DESCRIPTION AND OPERATION

Section I. AIRMAN

2-1. INTRODUCTION.

The purpose of this chapter is to describe the aircraft and its systems and controls which contribute to the physical act of operating the aircraft. It does not contain descrip tions of avionics or mission equipment covered elsewhere in this manual. This chapter also contains the emergency equipment installed. This chapter is not designed to provide instructions on the complete mechanical and electrical workings of the various systems; therefore, each is described only in enough detail to make comprehension of that system sufficiently complete to allow for safe and cfficient operation.

2.2 GENERAL

The C-12R is a pressurized, low wing, all metal aircraft and is powered by two PT6A-42 turboprop engines. The aircraft has all-weather capability. Distinguishable features of the aircraft are the slender, streamlined engine nacelles, four-blade propellers, T-tail, and a ventral fin below the empennage. The basic mission of the aircraft is to provide scheduled or unscheduled air transportation of passengers and/or cargo in any area of the world. Cabin entrance is ma& through a stair-type door aft of the wing on the left side of the fuselage (fig. 2-1). The interior configuration of the aircraft is shown in figure 2-2.

2-3. DIMENSIONS.

Overall aircraft dimensions are shown in figure 2-3.

2-4. GROUND TURNING RADIUS.

Minimum ground turning radius of the aircraft is shown in figure 2-4.

26. MAXIMUM WEIGHTS.

a. Normal Category.

(7) *Takeoff.* Maximum gross takeoff weight is 12,500 pounds.

(2) *Landing.* Maximum gross landing weight is 12,500 pounds.

(3) *Maximum Ramp Weight.* Maximum ramp weight is 12,590 pounds.

(4) *Maximum Zero Fuel Weight.* Maximum zero fuel weight is 11,000 pounds.

b. Restricted Category (High Gross Weight Operations).

(1) *Takeoff.* Maximum gross takeoff weight is 14,000 pounds.

(2) *Landing.* Maximum gross landing weight is 13,500 pounds..

(3) *Maximum Ramp Weight.* Maximum ramp weight is 14,090 pounds.

(4) *Maximum Zero Fuel Weight.* Maximum zero fuel weight is 11,000 pounds.

2-6. EXHAUST AND PROPELLER DANGER AREAS.

Exhaust and propeller danger areas to be avoided by personnel while aircraft engines are being operated on the ground are depicted in figure 2-5. Distance to be maintained with engines operating at idle are also shown. Temperature and velocity of exhaust gases at varying locations aft of the exhaust stacks are shown for maximum power. The danger area extends to 40 feet aft of tae exhaust stack outlets. Distances to be maintained with engines operating at idle and propeller danger areas are also shown.

2-7. LANDING GEAR SYSTEM.

The retractable tricycle landing gear is electrically controlled and hydraulically actuated. The landing gear is extended and retracted by a hydraulic power pack, located in the left wing center section, forward of the main spar. The power pack consists primarily of a hydraulic pump, a 28 VDC motor, a gear selector valve and solenoid, a two section fluid reservoir, filter screens, a gear-up pressure switch, and a low fluid level sensor. Engine bleed air, regulated to 18 to 20 PSI, is plumbed into the power pack reservoir and the system fill reservoir to prevent cavitation of the pump. The fluid level sensor activates an amber caution annunciator, placarded **HYD FLUID LOW,** located on the caution/advisory annunciator panel, whenever the fluid level in the power pack is low. The annunciator is tested by pressing the **HYD FLUID SENSOR TEST** switch located on the pilot's subpanel (fig. 2-6).

power for the hydraulic power pack is supplied through the landing gear motor relay and a 60-ampere circuit

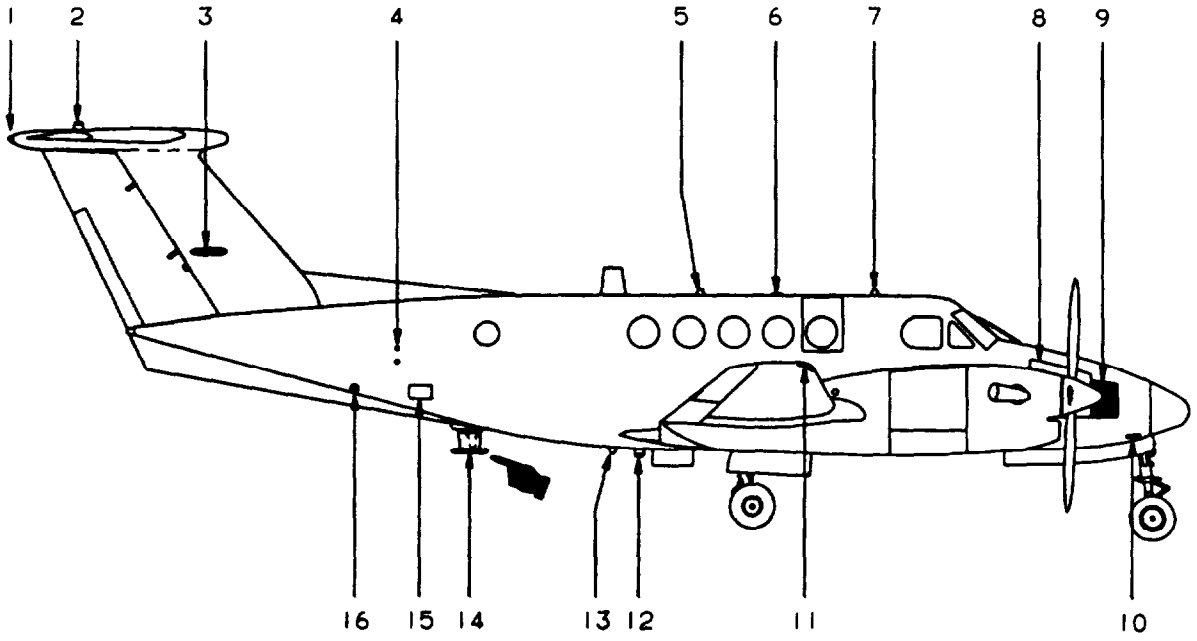

1. Toll Navigation Light
2. Strobe Beacon (Upper)
3. VOR/Localizer Antenna
4. Static Air Ports (Right)
5. Transponder Antenna
6. Global Positioning System Antenna
7. TACAN Antenna (Upper)
8. Nose Avionics Compartment Access Door
9. Air Conditioner Condenser Air Inlet
10. Pitot Tube (Right)
11. Navigation and Strobe Light
12. Strobe Beacon (Lower)
13. TACAN Antenna (Lower)
14. AM/FM (VHF/UHF) Communications Antenna
15. Oxygen System Servicing Door
16. Emergency Locator Transmitter Switch Access Door

BW02C960190C

Figure 2-1. General Exterior Arrangement - Right Side (Sheet 1 of 5)

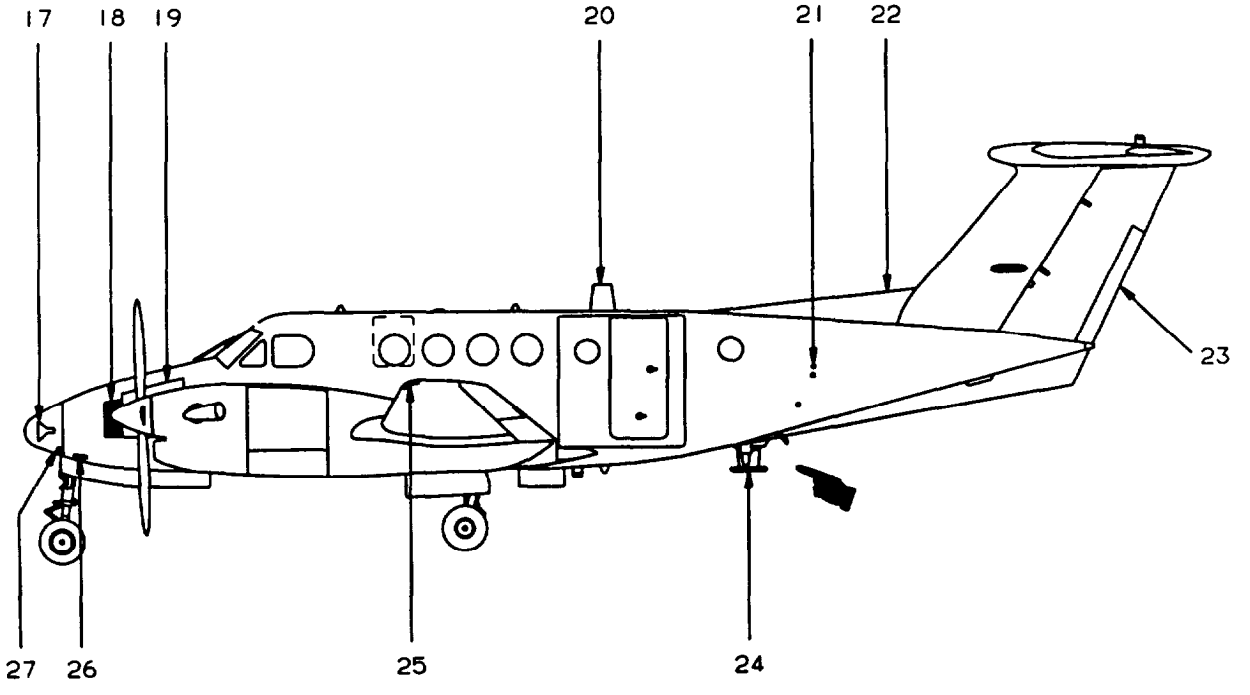

17. Radar Antenna
18 Air Conditioner Condenser Air Outlet
19. Nose Avionics Compartment Access Door
20. VHF/UHF Communications Antenna
21. Static Air Ports (Left)
22. Dorsal Fin
23. Rudder Trim Tab
24. UHF/Transponder Antenna
25. Navigation And Strobe Light
26. Pitot Tube (Left)
27. Glideslope Antenna

BW02C960191c

Figure 2-1. General Exterior Arrangement - Left Side (Sheet 2 of 5)

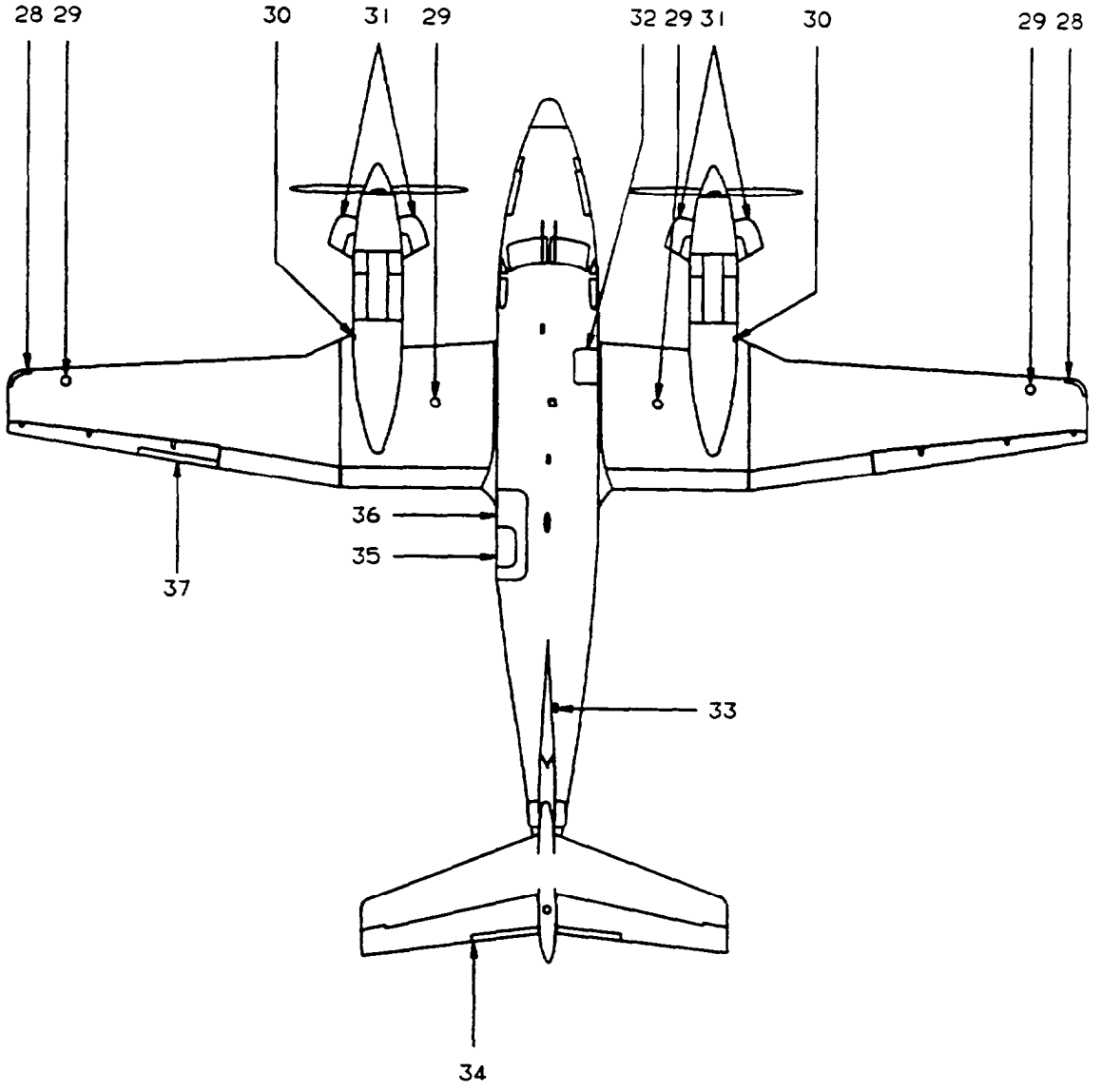

28. Recognition Light
29. Fuel Filler Cap
30. Ice Light
31. Exhaust Stock
32. Emergency Exit Hatch
33. Emergency Locator Transmitter Antenna
34. Elevator Trim Tab
35. Entrance Door
36. Cargo Door
37. Atleron Trim Tab

A958W02C0453 C

Figure 2-1. General Exterior Arrangement - Top (Sheet 3 of 5)

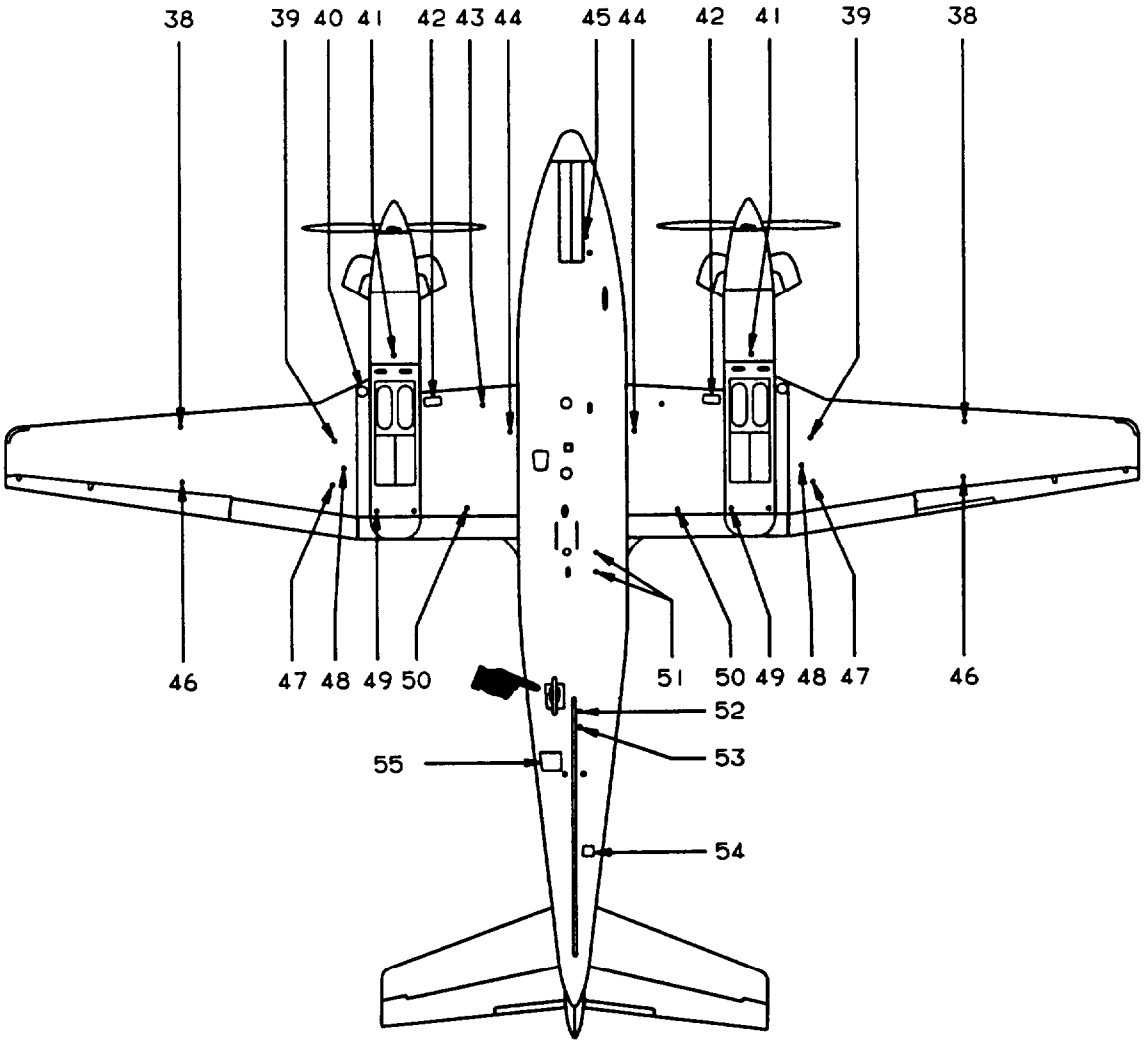

38. Tiedown Ring
39. Leading Edge Fuel Tank Drain
40. DC External Power Receptacle
41. Firework Fuel Filter Drain
42. Bleed Air Heat Exchanger Air Outlet
43. Battery Ram Air Vent
44. Extended Range Fuel System Drain
45. Hydraulic Reservoir Drain
46. Outboard Wing Fuel Sump Drain
47. Ron Heated Fuel Vent
48. Recessed Fuel Vent
49. Engine Oil Vent
50 Wing Jock Pod
51. Antenna Detce System Boot Hold-down Ejector Tubes
52. Oxygen Regulator Vent
53. Aft Comportment Drain
54. Lighting Sensor System Antenna
55. Tailcone Access Door

BWO2C960192C

Figure 2-1. General Exterior Arrangement - Bottom (Sheet 4 of 5)

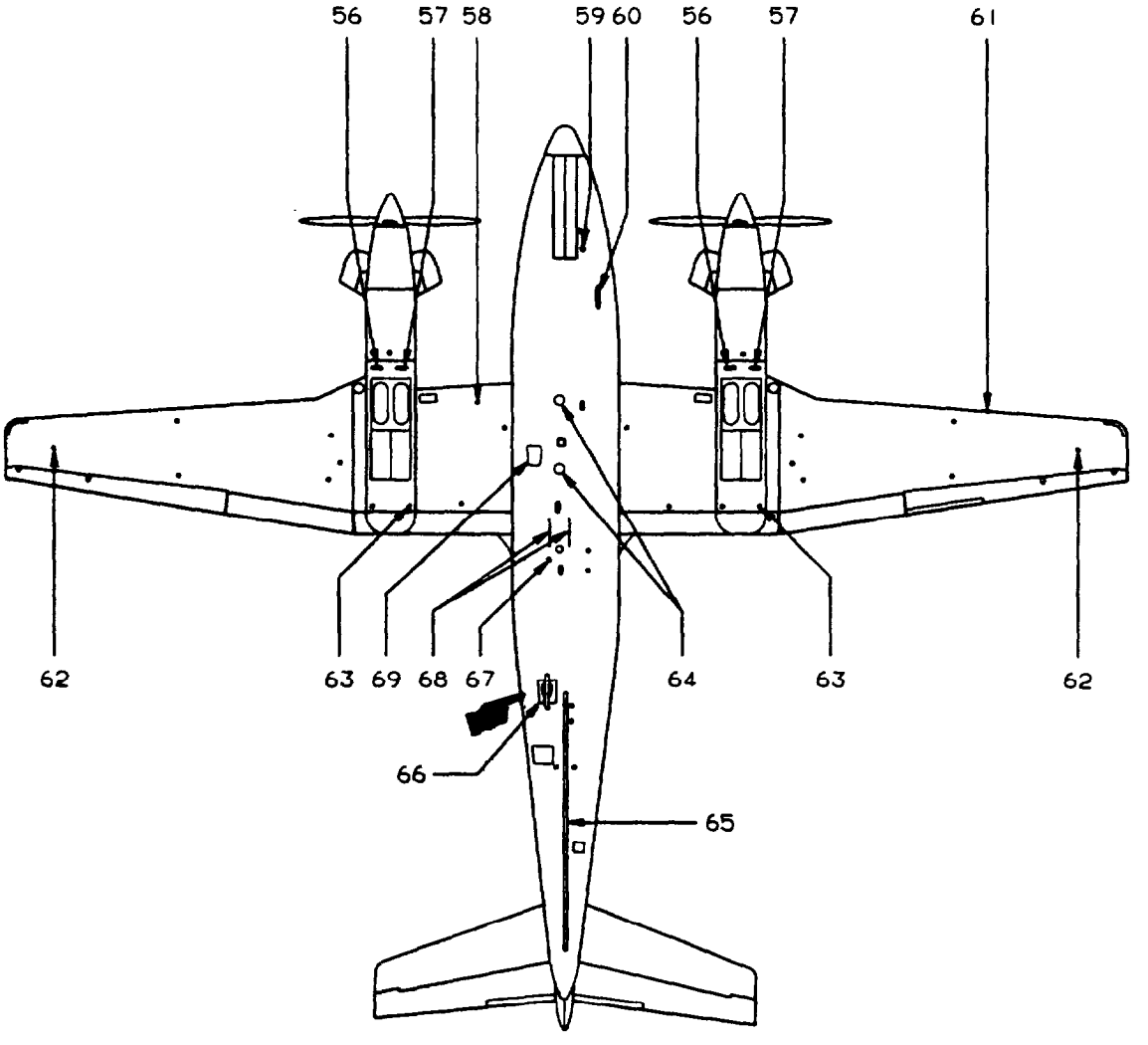

56. Standby Fuel Pump Drain
57. Strainer Drain
58. Battery Drain
59. Nose Jock Pod
60. Marker Beacon Antenna
61. Stall Warning Vane
62. Outboard Wing Fuel Vent
63. Gravity Fuel Lane Drain
64. Radio Altimeter Antenna
65. Ventral Fin
66. AM/FM (VHF/UHF) Communications Antenna
67. Surface Deice System Ejector Exhaust
68. Strobe Beacon Light Shields
69. ADF Antenna

BW02C960193c

Figure 2-1. General Exterior Arrangement - Bottom (Sheet 5 of 5)

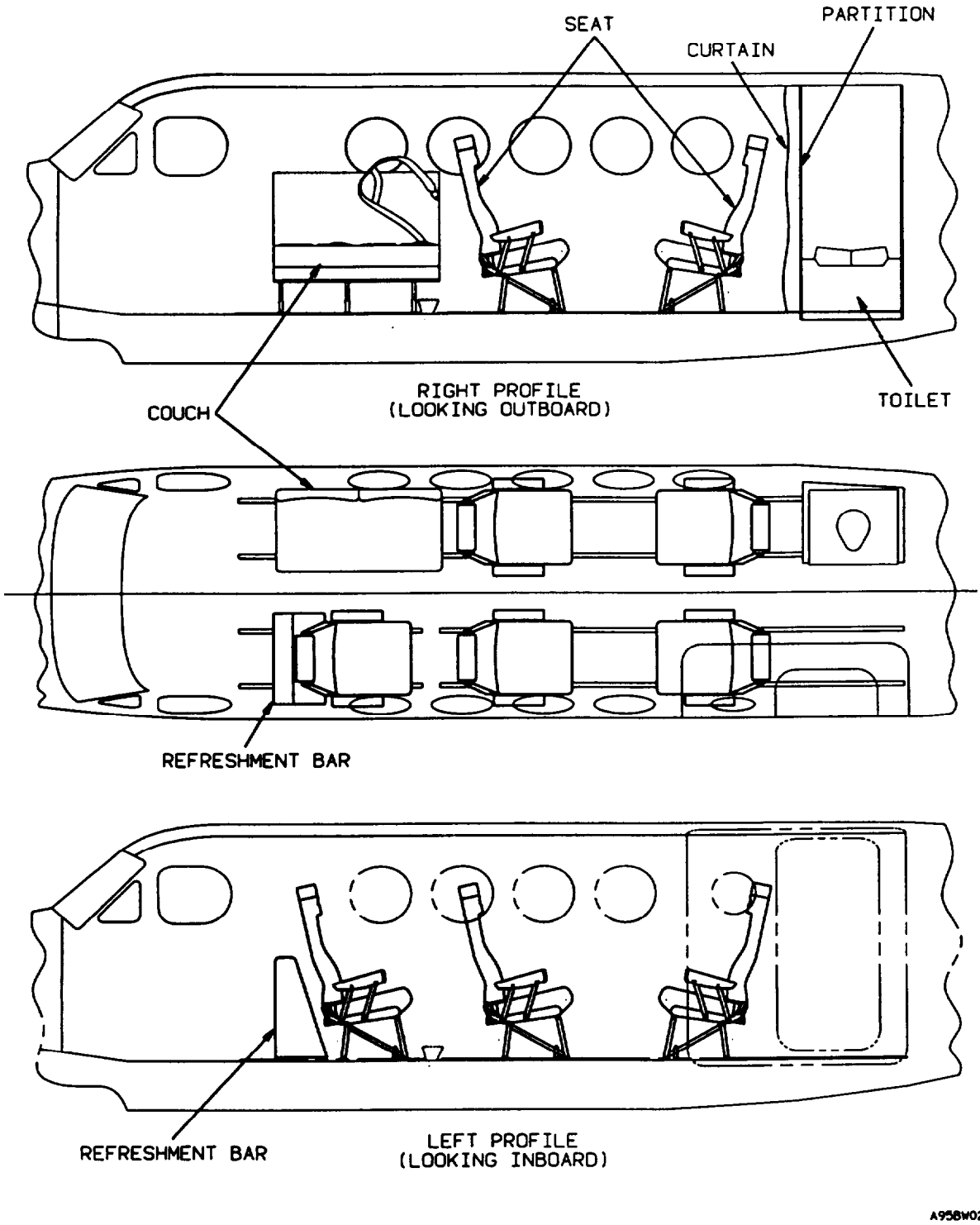

Figure 2-2. General Interior Arrangement

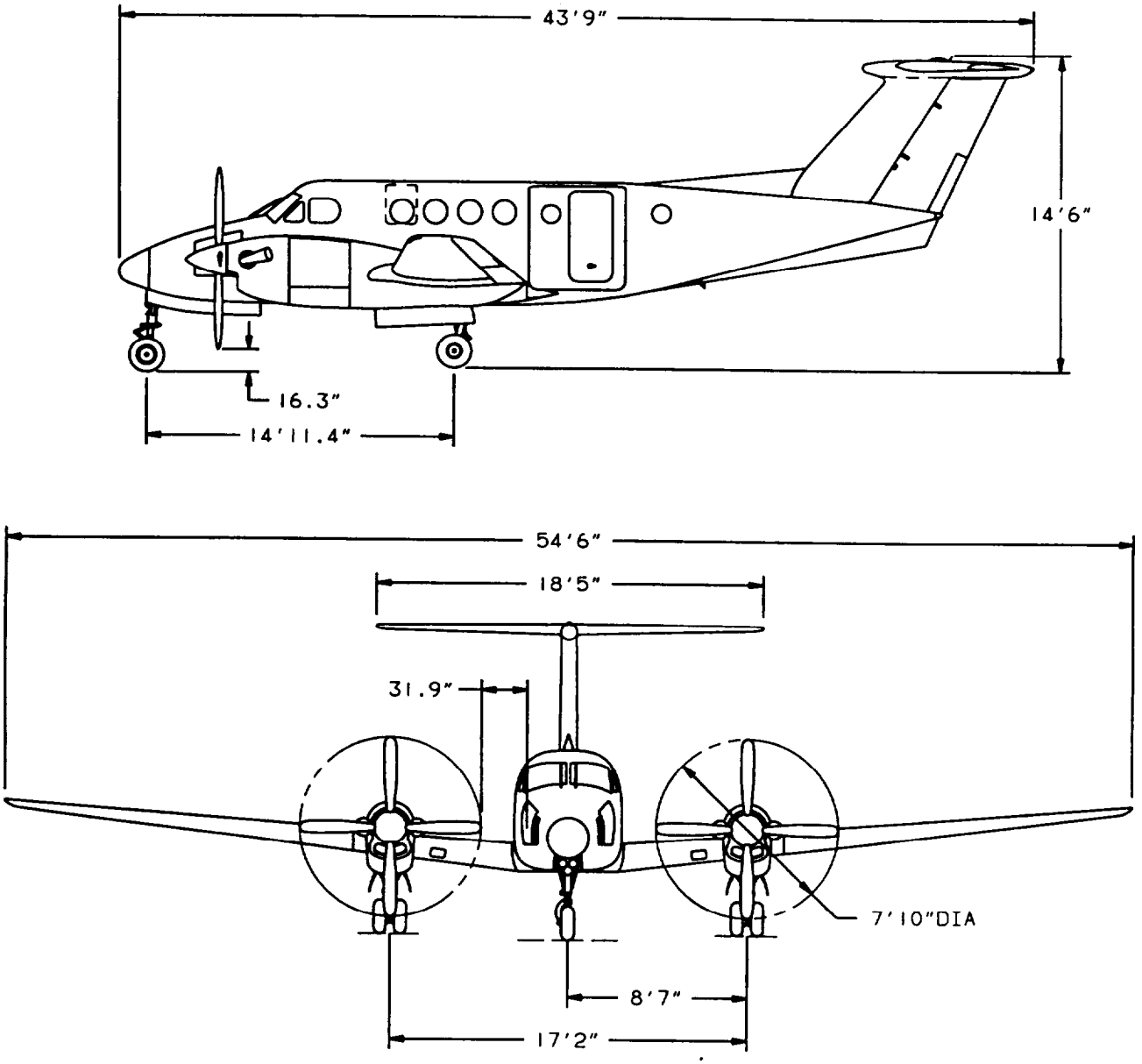

Figure 2-3. Principal Dimensions

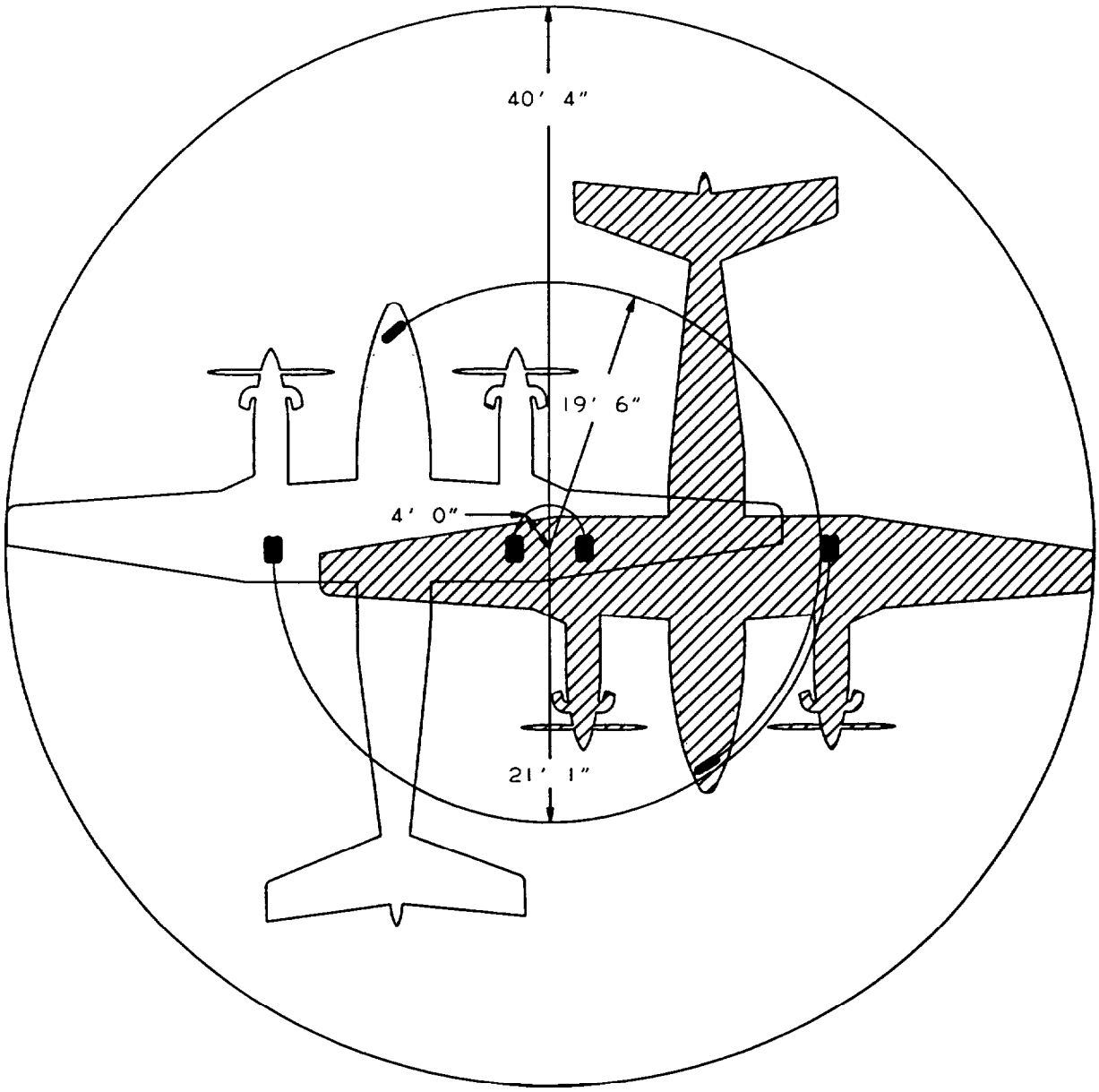

RADIUS FOR INSIDE GEAR	4 FEET
RADIUS FOR NOSE WHEEL	19 FEET 6 INCHES
RADIUS FOR OUTSIDE GEAR	21 FEET 1 INCH
RADIUS FOR WINGTIP	40 FEET 4 INCHES

TURNING RADII ARE PREDICATED ON THE USE OF DIFFERENTIAL BRAKING ACTION AND DIFFERENTIAL POWER. ACTUAL TURNING RADII DEPEND ON SURFACE CONDITIONS AND PILOT TECHNIQUE.

A95BWO2CO344 C

Figure 2-4. Ground Turning Radius

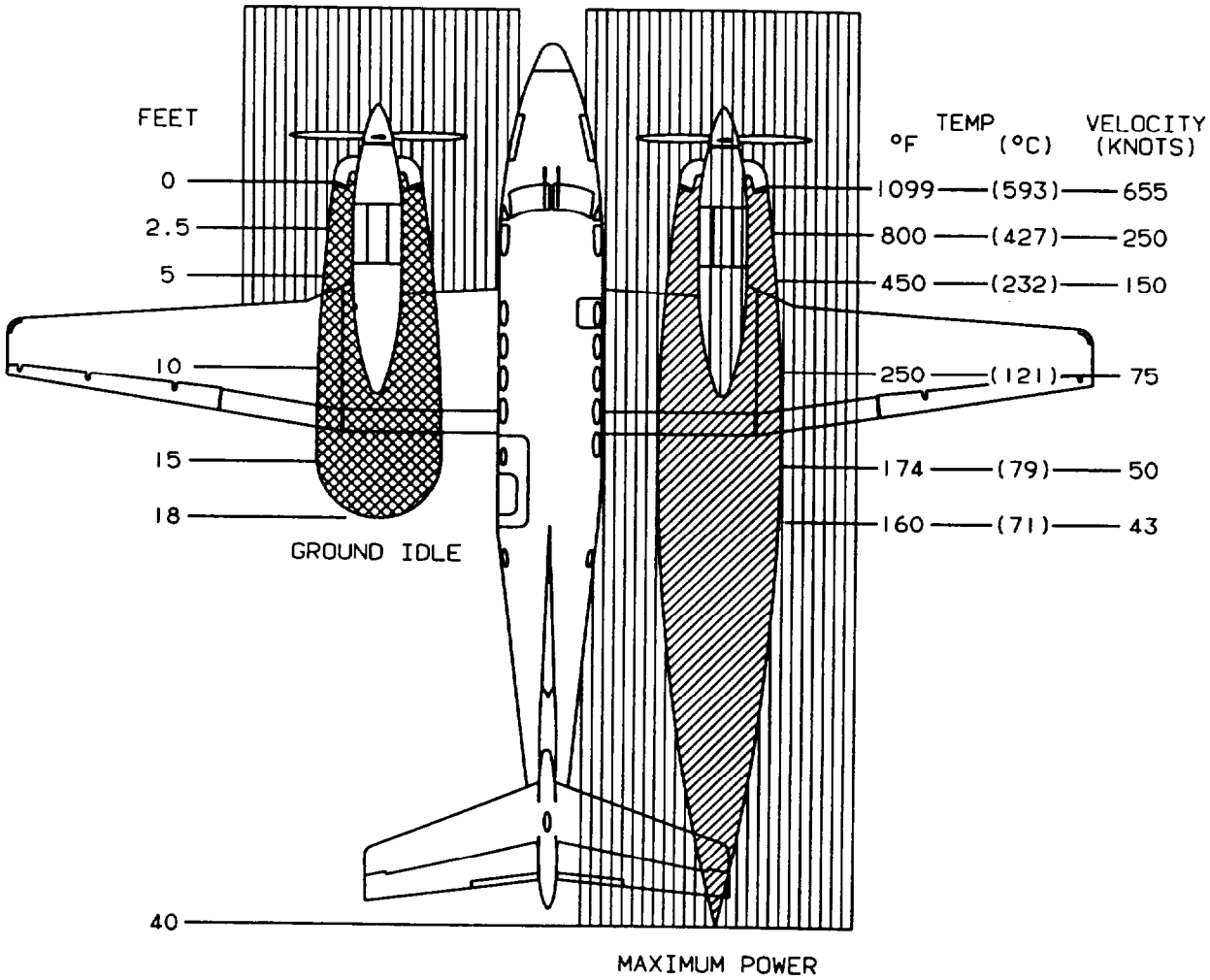

EXHAUST DANGER AREA (GROUND IDLE)

EXHAUST DANGER AREA (MAXIMUM POWER)

PROPELLER DANGER AREA

NOTE

THE DANGER AREAS INCLUDE THE RESULTANT INCREASE IN VELOCITY AND SIGNIFICANT REDUCTION IN TEMPERATURE DUE TO PROPELLER WAKE.

A95BWO2C345 C

Figure 2-5. Exhaust and Propeller Danger Areas

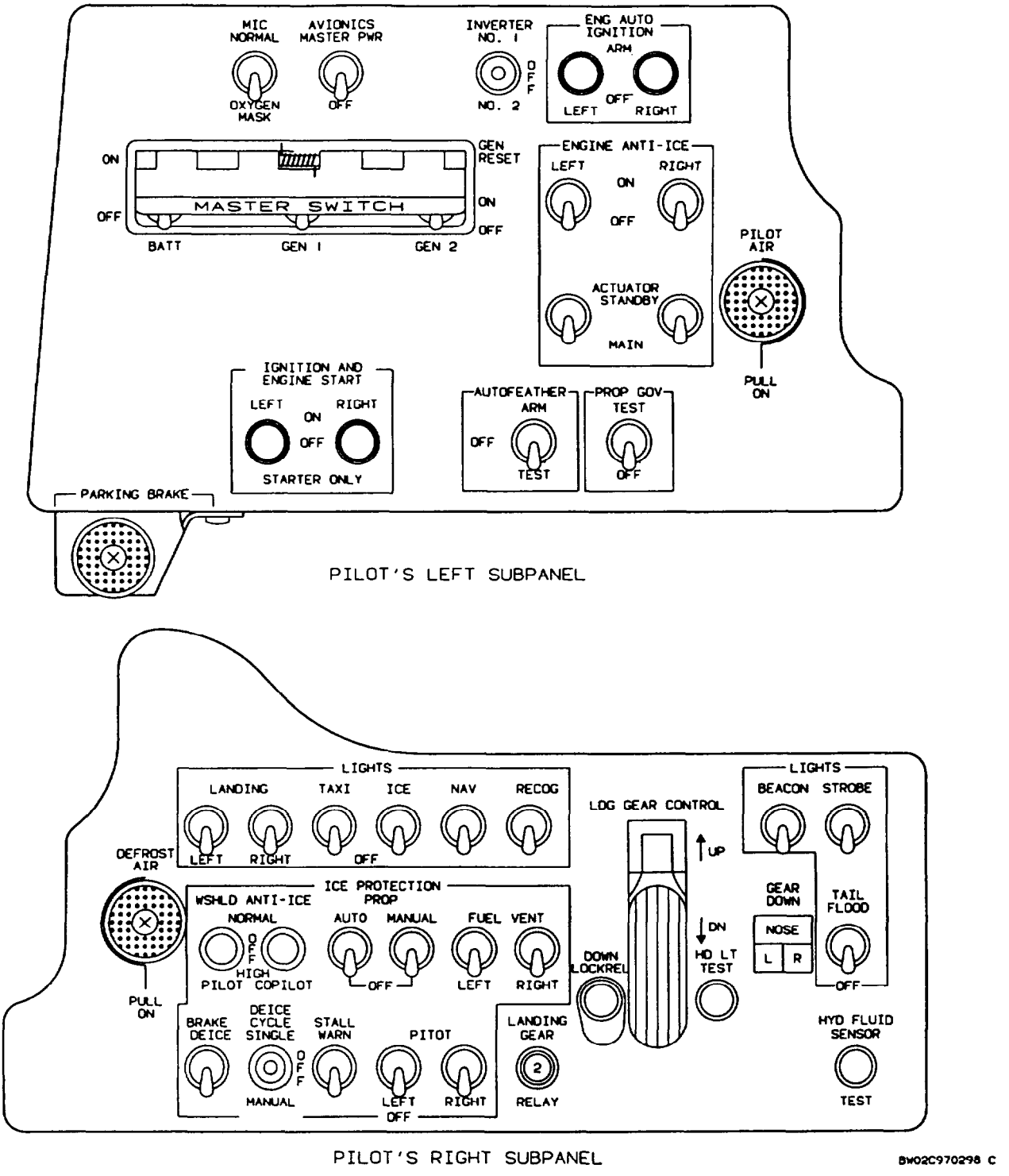

Figure 2-6. Subpanels (Sheet I of 3)

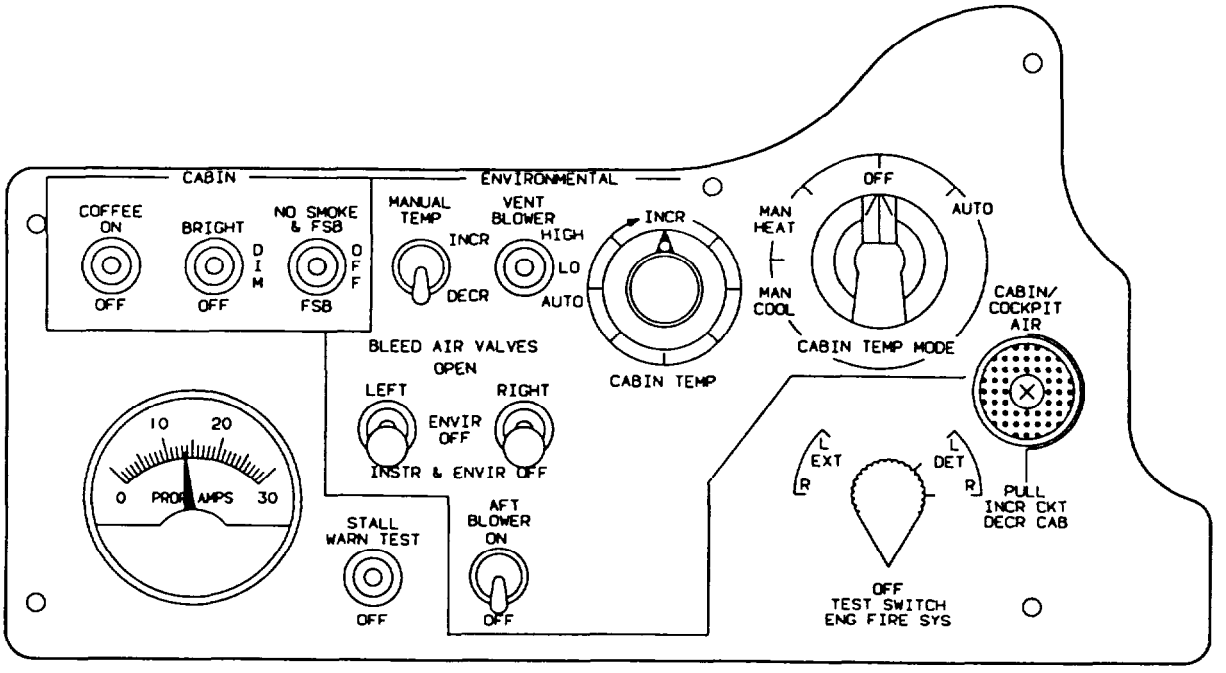

COPILOT'S LEFT SUBPANEL

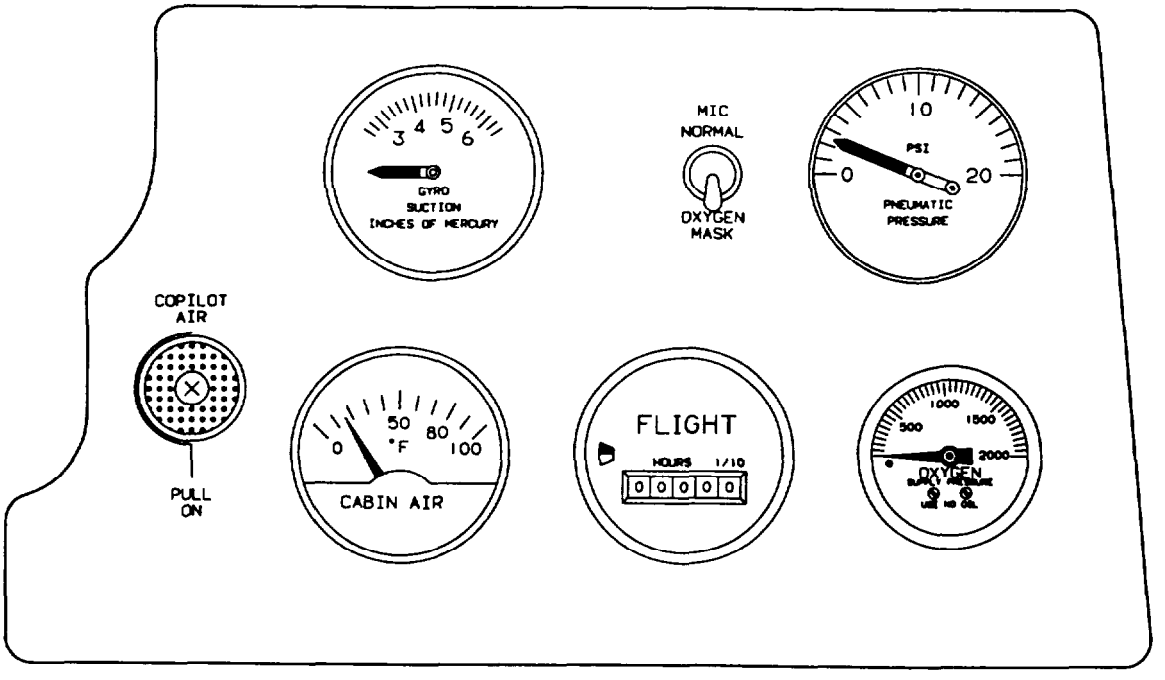

COPILOT'S RIGHT SUBPANEL

BW02C970299 C

Figure 2-6. Subpanels (Sheet 2 of 3)

L DC GEN		HYD FLUID LOW	RVS NDT READY		R DC GEN
L CHIP DETECT		IFF	DUCT OVERTEMP		R CHIP DETECT
L ENG ICE FAIL		BATTERY CHG	EXT PWR		R ENG ICE FAIL
L AUTO FEATHER		ELEC TRIM OFF	AIR COND N. LOW		R AUTO FEATHER
L ENG ANTI-ICE	BRAKE DEVICE ON	LOG/TAXI LIGHT	PASS OXY ON		R ENG ANTI-ICE
L IGNITION ON	L BL AIR OFF		FUEL CROSSFEED	R BL AIR OFF	R IGNITION ON

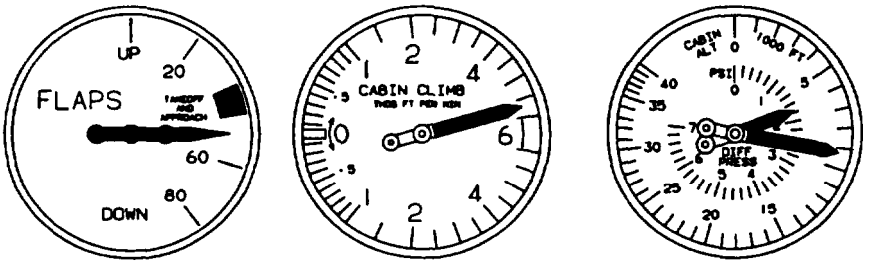

CENTER SUBPANEL

BWO2C970300 C

Figure 2-6. Subpanels (Sheet 3 of 3)

breaker located under the floorboard forward of the main spar. The motor relay is energized by power furnished through the 2-ampere **LANDING GEAR RELAY** circuit breaker located on the pilot's subpanel (fig. 2-6). The power pack motor is protected by a time delay module which senses operation voltage through a 5-ampere circuit breaker. Both are located beneath the aisleway floorboards, forward of the main spar. Landing gear extension or retraction is normally accomplished in 6 to 7 seconds. Voltage to the power pack is terminated after the fully extended or retracted position is reached. If electrical power has not terminated within 14 seconds, a relay and 2-ampere landing gear circuit breaker will open, and electrical power to the system power pack will be interrupted.

The landing gear system utilizes folding braces, called drag legs, that lock into place when the gear is fully extended. The nose landing gear actuator incorporates an internal down lock to hold the gear in the fully extended position. The two main landing gear are held in the fully extended position by mechanical hook and pin locks. The landing gear are held in the up position by hydraulic pressure. The pressure is controlled by the power pack pressure switch and an accumulator that is precharged with nitrogen to 800 ±50 psi. Gear doors are opened and closed through a mechanical linkage connected to the landing gear. The nose wheel steering mechanism is automatically centered and the rudder pedals relieved of the steering load when the landing gear are retracted Air-oil type shock struts, filled with compressed nitrogen and hydraulic fluid, are incorporated with the landing gear.

a. *Landing Gear Control Switch.* Landing gear system operation is controlled by a manually actuated, wheel-shaped switch, placarded **LDG GEAR CONTROL - UP - DN,** located on the pilot's subpanel (fig. 2-6). The control switch and associated relay circuits are protected by a 2-ampere circuit breaker, placarded **LANDING GEAR RELAY,** located on the pilot's subpanel (fig. 2-6).

b. Landing Gear *Down Position Indicator* Lights. Visual indication of landing gear position is provided by three individual green **GEAR DOWN** position indicator lights located on the pilot's subpanel. Testing of the indicator lights is accomplished by pressing the annunciator test switch. The circuit is protected by a 5-ampere circuit breaker, placarded **LANDING GEAR IND,** on the right sidewall circuit breaker panel (fig. 2-7).

c. Landing Gear Position Warning Lights, Two parallel-wired red indicator lights, located in the LDG **GEAR CONTROL** switch handle, illuminate to show that the gear is in transit or unlocked. The red indicator lights in the handle also illuminate when the landing gear warning horn is actuated. Both red indicator lights indicate the same warning conditions, but two are provided for a fail-safe indication in case one bulb burns out. The circuit is protected by a 5-ampere circuit breaker, placarded **LANDING GEAR IND,** on the right sidewall circuit breaker panel (fig. 2-7).

d. Landing Gear Warning Indicator tight Test Switch. A test switch, placarded **HDL LT TEST,** is located on the pilot's subpanel (fig. 2-6). When this test switch is pressed, failure of the landing gear handle to illuminate red indicates two defective bulbs or a circuit fault. The circuit is protected by a 5-ampere circuit breaker, placarded **LANDING GEAR WARN,** on the right sidewall circuit breaker panel (fig. 2-7).

e. Landing Gear Warning System. The landing gear warning system is provided to warn the pilot that the landing gear is not down and locked during specific flight regimes. Various warning modes result, depending upon the position of the flaps.

With flaps in the **UP** or **APPROACH** positions and either or both **POWER** levers retarded below approximately 80% N_1, the warning horn will sound and the landing gear switch handle indicator lights will illuminate. The horn can be silenced by depressing the **WARNING HORN SILENCE** switch, located on the left **POWER** lever. However, the lights in the landing gear switch handle cannot be cancelled. The gear warning silence switch is a magnetically held switch. Once actuated it will stay in the **UP** position until both **POWER** levers are advanced above 86% N_1. The landing gear warning system will be rearmed if both **POWER** levers are advanced above 86% N_1.

With the landing gear retracted and flaps beyond the **APPROACH** position, the warning horn and landing gear switch handle lights will be activated regardless of the power setting. The horn cannot be silenced in this case, until either the landing gear is lowered or the flaps are retracted to the **UP** or **APPROACH** position.

f. Landing Gear *Safety Switches.* A safety switch on each main landing gear shock strut controls the operation of various aircraft systems that function only during flight or only during ground operation. These switches are mechanically actuated whenever the main landing gear shock struts are extended (normally after takeoff) or compressed (normally after landing). The safety switch on the right main landing gear strut deactivates the landing gear control circuits, cabin pressurization circuits, and the flight hour meter when the shock strut is compressed. This switch also activates a downlock hook, preventing the landing gear from being raised while the aircraft is on the ground. The hook, which unlocks automatically after takeoff, can be manually overridden by pressing down on the red button, placarded **DN LOCK REL,** located adjacent to the landing gear handle on the pilot's subpanel (fig. 2-6). If the override is used, the landing gear warning horn will sound

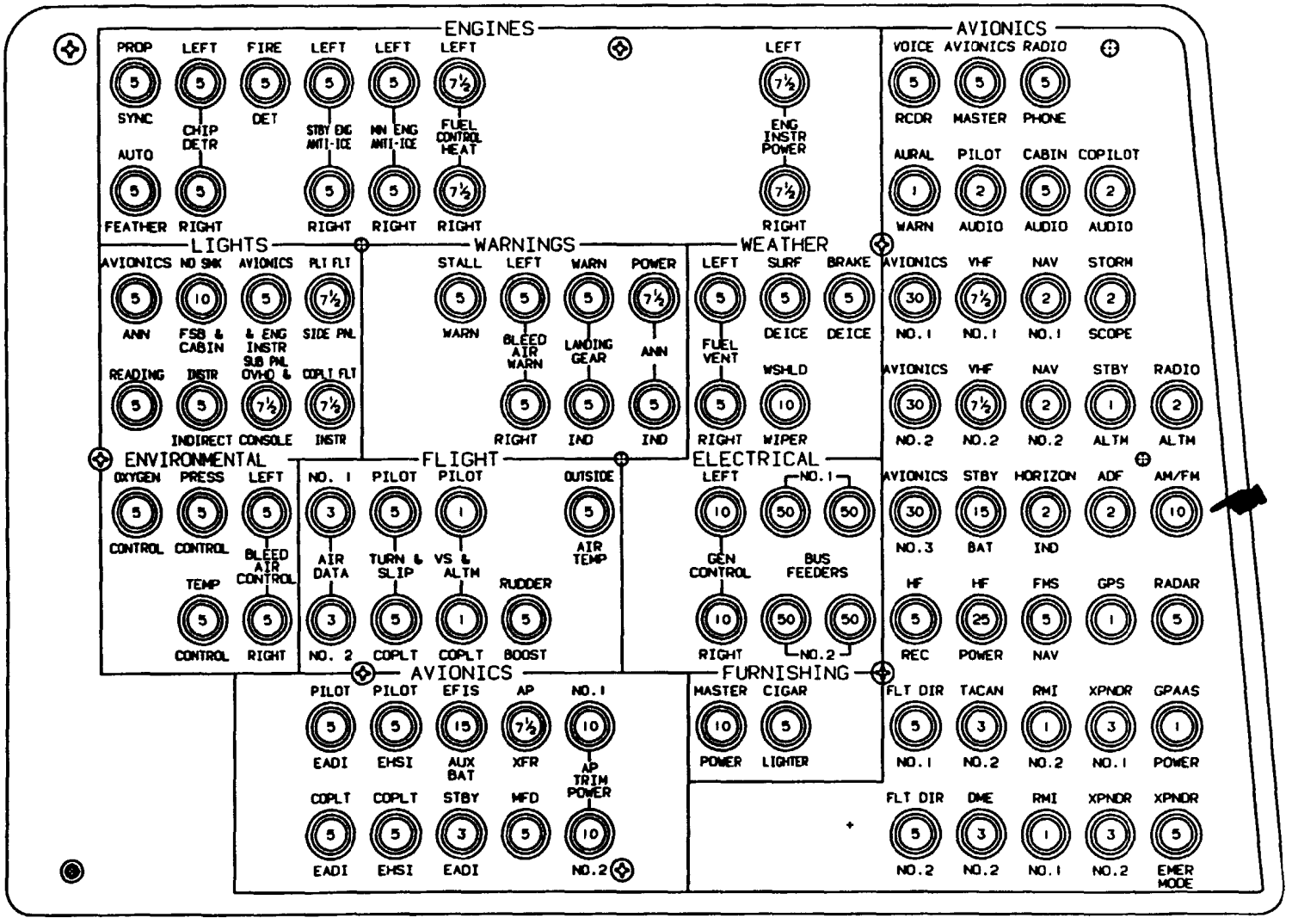

Figure 2-7. Right Sidewall Circuit Breaker Panel

intermittently and two parallel-wired red indicator lights, located in the landing gear control switch handle, will illuminate, provided the battery switch is on. The safety switch on the left main landing gear strut activates the left and right engine ambient air shut-off valves when the strut is extended.

g. Landing Gear Alternate Extension.

WARNING

After an emergency landing gear extension has been made, do not move any landing gear controls or reset any switches or circuit breakers until the aircraft is on jacks. The failure may have been in the gear-up circuit, which could cause the gear to retract while the aircraft is on the ground.

If for any reason the three green **GEAR DOWN** indicator lights do not illuminate (e.g., in case of an electrical system failure), continue pumping until sufficient resistance is felt to ensure that the gear is down and locked. Do not stow the hand pump handle. Stowing the handle will release hydraulic pressure. If the three. **GEAR DOWN** indicator lights are not illuminated, the landing gear downlocks may not be engaged and hydraulic pressure may be the only thing holding the landing gear down.

An extension lever, placarded **LANDING GEAR** ALTERNATE EXTENSION, is located on the floor between the crew seats. Manually pumping the lever lowers the landing gear. The hydraulic pump, which is utilized to manually lower the gear, is located under the floor.

To engage the system, pull the **LANDING GEAR RELAY** circuit breaker, located on the pilot's subpanel (fig. 2-6), and ensure that the **LDG GEAR CONTROL** handle is in the DN position. Remove the extension lever from the securing clip and pump the lever up and down until the three green **GEAR DOWN** indicator lights illuminate. As the handle is moved, hydraulic fluid is drawn from the hand pump suction port of the power pack and routed through the hand pump pressure part to the actuators. After an alternate extension of the landing gear, ensure that the extension lever is in the full down position prior to stowing the lever in the retaining clip. When the lever is stowed, an internal relief valve is actuated to relieve the hydraulic pressure in the pump.

After a practice alternate extension, stow the extension lever, reset the **LANDING GEAR RELAY** circuit breaker, and retract the gear in the normal manner with the landing gear control handle.

h. Tires. The aircraft is equipped with dual 22 x 6.75 x 10, 8 ply rated, tubeless rim-inflation tires on each main gear and a 22 x 6.75 x 10, 8 ply rated, tubeless tire on the nose wheel.

i. Nose wheel Steering System. The aircraft is maneuvered on the ground by the nose wheel steering system. Direct linkage from the rudder pedals (fig. 2-8) to the nose wheel steering linkage allows the nose wheel to be turned 12° to the left of center or 14° to the right. When rudder pedal steering is augmented by main wheel braking action, the nose wheel can he deflected up to 48° either side of center. Shock loads which would normally be transmitted to the rudder pedals are absorbed by a spring mechanism in the steering linkage. Retraction of the landing gear automatically centers the nose wheel and disengages the steering linkage from the rudder pedals.

CAUTION

Repeated application of brakes with insufficient cooling time between applications will cause a loss of braking efficiency, and may cause brake failure, wheel failure, tire blowout, or destruction of wheel assembly by fire.

j. Wheel Brake System. The main wheels are equipped with multiple-disc hydraulic brakes, actuated by master cylinders attached to the toe brake sections of the rudder pedals. Brake fluid is supplied to the system from a reservoir in the nose compartment. Braking is permitted from either set of rudder pedals. No emergency brake system is provided.

2-8. PARKING BRAKE.

Dual parking brake valves are installed below the cockpit floor. Both valves can be closed simultaneously by pressing both brake pedals in either cockpit position to build up pressure, then pulling out the handle, placarded PARKING BRAKE, on the pilot's subpanel (fig. 2-6). Pulling the handle full out sets the check valves in the system and any pressure being applied by the toe brakes is maintained. The parking brake is released when the brake handle is pushed in. The parking brake may be set from either the pilot's or copilot's position. The parking brake shall not be set during flight.

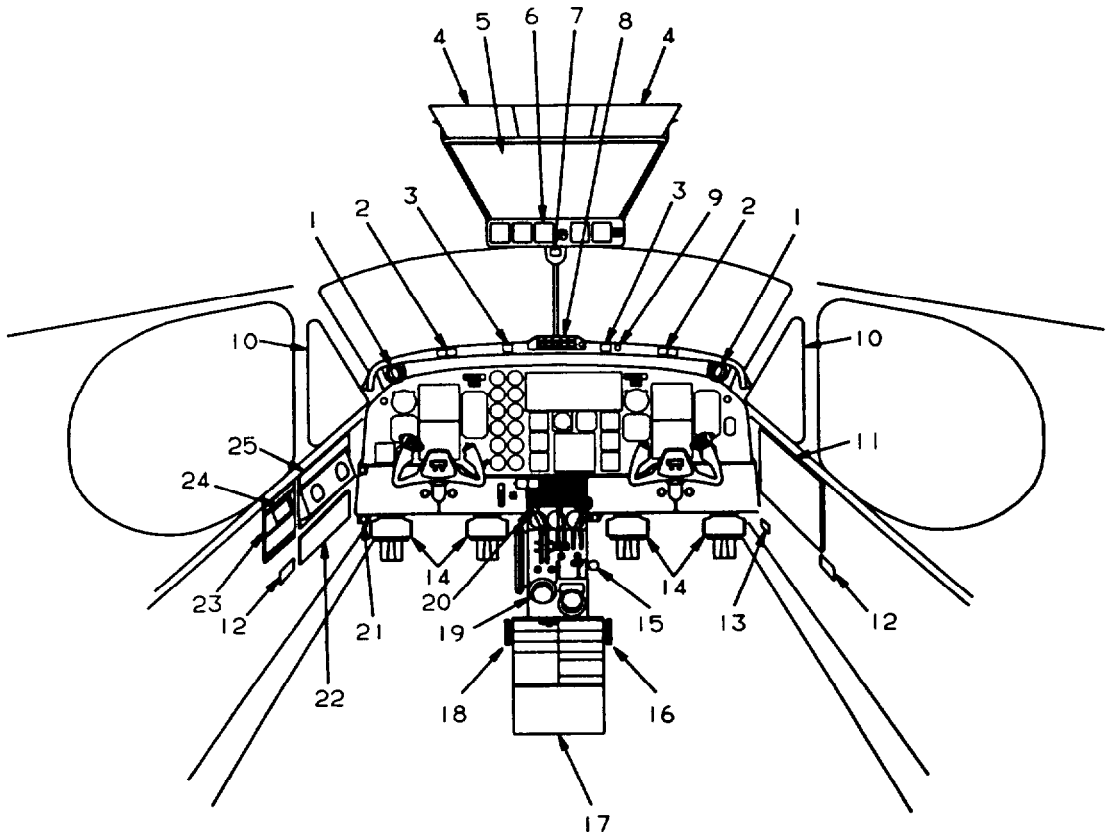

1. Ventilation Air Outlet
2. Master Warning/Master Caution Switches
3. Engine Fire Detection/Extinguisher Switch-Indicators
4. Crew Oxygen Masks
5. Overhead Control Panel
6. Electrical Equipment Gages
7. Standby Magnetic Compass
8. Warning Annunctator Panel
9. Cockpit Voice Recorder Microphone
10. Storm Window
11. Right Sidewall Circuit Breaker Panel
12. Headset Jocks
13. Alternote Static Air Source Selector Control
14. Rudder Pedals
15. Foot Operated Microphone Switch
16. Passenger ManuaL Oxygen Control Handle
17. Control Pedestal Extension
18. Oxygen On/Off Control Handle
19. Control Pedestal
20. Caution/Advisory Annunctator Panel
21. Parking Brake Handle
22. Left Sidewall Circuit Breaker Panel
23. ELT Transmit Indicator Light and Control Switch
24. Free Air Temperature Indicator
25. Fuel Management Panel

A95BWO2CO348 C

Figure 2-8. Cockpit

2-9. ENTRANCE AND EXIT PROVISIONS.

NOTE

Two keys are provided in the loose tools and equipment bag. Both keys fit the locks on the cabin door, emergency hatch, tailcone access door, and the right and left nose avionics compartment doors.

a. Cabin Door.

CAUTION

Structural damage may occur if more than one person is present on the airstair cabin door at one time. The door is weight limited to 300 pounds.

An airstair cabin door (fig. 2-9), hinged at the bottom, provides a stairway for normal and emergency entrance and exit. In the closed position, the door becomes an integral part of the cargo door. The cabin door is provided with steps, two of which fold flat against the door in the closed position. A step folds down over the door sill when the door opens to provide a platform (step) for door seal protection. A plastic-encased cable provides a handhold and support for the door in the open position and a convenience for closing the door from inside. A hydraulic damper permits the door to lower gradually during opening. A rubber seal around the door seals the pressure vessel while the aircraft is in flight. The door locking mechanism is by either of the two mechanically interconnected handles, one inside and the other outside the door. When either handle is rotated, three rotating cam-type latches on either side of the door capture posts mounted on the cargo door. A button adjacent to the door handle must be depressed before the handle can be rotated to open the door. A bellows behind the button is inflated when the aircraft is pressurized to prevent accidental unlatching and/or opening of the door. A placard adjacent to the window instructs the operator that the safety lock arm is in position around the bellows shaft which indicates a properly locked door. Pushing the red button adjacent to the window will illuminate the inside door mechanism. A **DOOR UNLOCKED** annunciator on the caution/advisory panel will illuminate if the door is not closed and all latches fully locked. The cabin door opening is 21.5 inches wide by 46.0 inches high.

b. Cargo Door. A swing-up cargo door (fig. 2-9), hinged at the top, provides access for loading cargo or bulky items. The cargo door opening is 52.0 inches wide by 52.0 inches high. After initial opening force is applied, gas springs will completely open the cargo door automatically. The door is counterbalanced and will remain in the open position. A door support rod is used to hold the door in the open position, and to aid in overcoming the pressure of the gas spring assemblies when closing the door. Once closed, the gas springs apply a closing force to assist in latching the door. A rubber seal around the door seals the pressure vessel while in flight. The door locking mechanism is operated only from inside the aircraft, and is operated by two handles, one in the bottom forward portion of the door and the other in the upper aft portion of the door. When the upper aft handle is operated per placard instructions, cam-type latches (two on the forward side of the door and two on the aft side) rotate, capturing posts mounted on the fuselage side of the door opening. The bottom handle, when operated per placard instructions, actuates four pin-lug latches across the bottom of the door. A button on the upper aft handle must be pressed before the handle can be released to open or latch the door. A latching lever on the bottom handle must be lifted to release the handle before the lower latches can be opened. These act as additional aids in preventing accidental opening or unlatching of the door. The cabin and cargo doors are equipped with dual sensing circuits to provide the crew with remote indication of cabin/cargo door security. An annunciator, placarded **DOOR UNLOCKED,** will illuminate if the cabin or cargo door is open and the battery switch is on. If the battery switch is off, the annunciator will illuminate only if the cabin/cargo door is not securely closed and latched. The cabin/cargo door sensing circuit receives power from the hot battery bus.

CAUTION

When operating the cargo door, ensure that the cabin door is closed and locked. Operating the cargo door while the cabin door is open may damage the door hinge and adjacent structure.

(1) Opening the cargo *door.*

CAUTION

To prevent damage to the mechanism, avoid side loading of the gas springs.

1. Handle access door (lower forward corner of door) - Unfasten and open.
2. Handle - Lift hook and move to **OPEN** position.
3. Handle access door - Secure.
4. Handle access door (upper aft comer of door) - Unfasten and open.
5. Handle - Press button and lift to **OPEN** position, then latch in place.

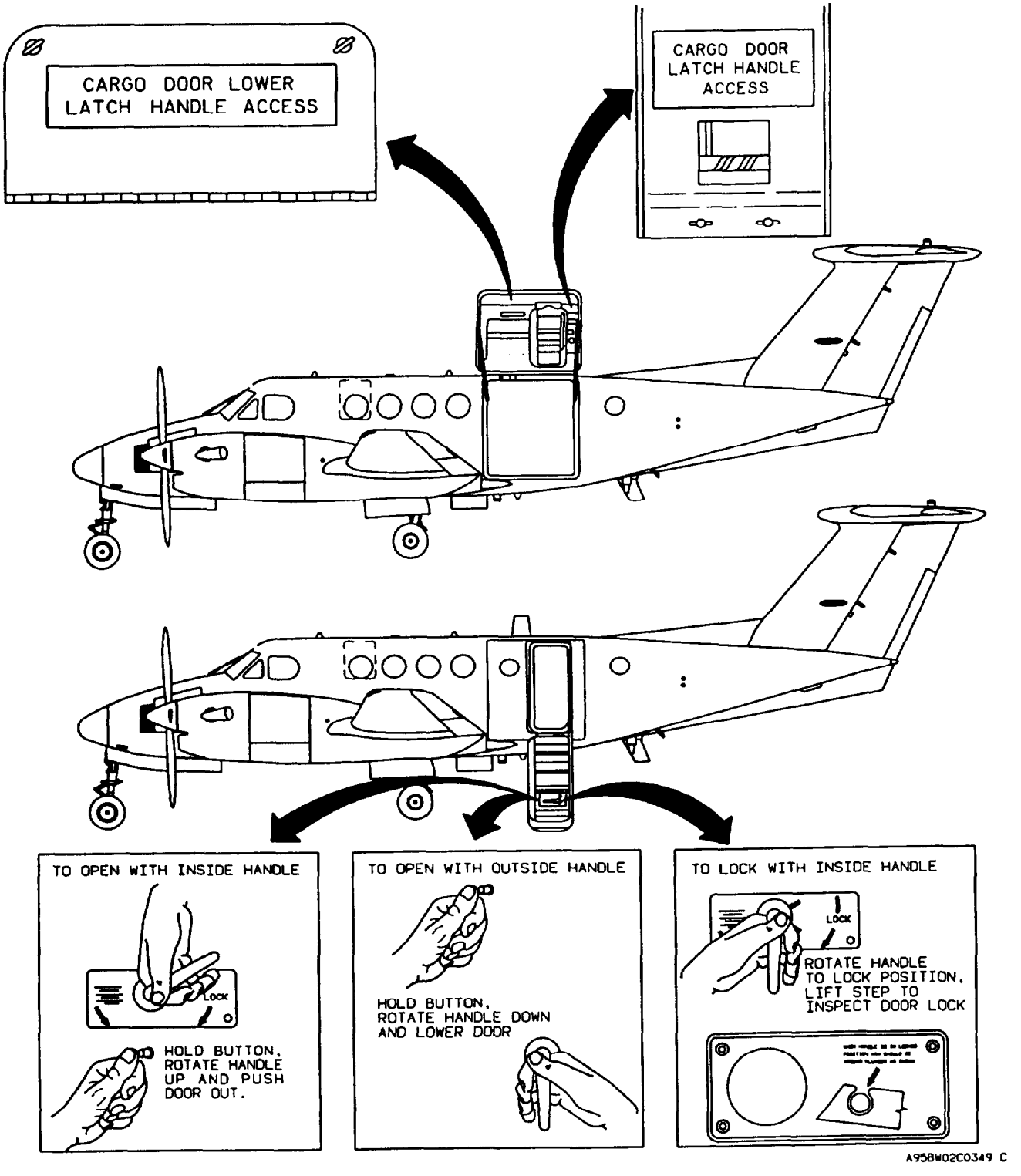

Figure 2-9. Cabin and Cargo Doors

6. Handle access door - Secure.

7. Door support rod - Attach one end to cargo door ball stud (on forward side of door).

8. Support rod detent pin - Check in place.

9. Cabin door sill step - Push out and allow cargo door to swing open. Gas springs will automatically open the door.

10. Door support rod - Attach free end to ball stud on forward fuselage door frame.

(2) Closing the cargo door.

CAUTION

To prevent damage to the mechanism, avoid side loading of the gas springs.

1. Door support rod - Detach from fuselage door frame ball stud, then firmly grasp free end of rod while exerting downward force to overcome the pressure of gas spring assemblies, then remove support rod from door as gas spring assemblies pass the over-center position.

2. Cargo door - Pull closed, using finger hold cavity in fixed cabin door step.

3. Handle access door (upper aft comer of door) - Unfasten and open.

4. Handle - Press button and pull handle down until it latches in closed position.

5. Handle access door - Secure.

6. Handle access door (lower forward corner of door) - Unfasten and open.

7. Handle - Move to full forward position.

8. Safety hook - Check locked in position by pulling aft on handle.

9. Handle access door - Secure.

c. Door Unlocked Annunciator. As a safety precaution, two flashing yellow **MASTER CAUTION** annunciators in the glareshield and a steadily illuminated **DOOR UNLOCKED** amber caution annunciator on the caution/advisory panel indicate the cabin door is not closed and locked. This circuit is protected by the two 5-ampere circuit breakers, placarded **ANN POWER** and **ANN IND,** located on the right sidewall circuit breaker panel (fig. *2-7).*

d. Cabin Emergency Exit Hatch. The cabin emergency hatch, placarded **EXIT - PULL,** is located on the right cabin sidewall just aft of the copilot's seat. The hatch may be released from the inside with a pull-down handle. A flush-mounted, pull out handle allows the hatch to be released from the outside. The hatch is of the non-hinged plug type which removes completely from the frame when the latches are released. The hatch can be key locked from the inside to prevent opening from the outside. The inside handle will unlatch the escape hatch, whether or not it is locked, by overriding the locking mechanism. The keylock should be unlocked prior to flight to allow removal of the escape hatch from the outside in the event of an emergency. The key remains in the lock when the hatch is locked and can be removed only when the hatch is unlocked. The key slot is in the vertical position when the hatch is unlocked. Removal of the key from the lock before flight assures the pilot that the hatch can be removed from the outside if necessary.

2-10. WINDOWS.

a. Cockpit Windows. The pilot and copilot have side windows, a windshield, and storm windows, which provide visibility from the cockpit. The storm windows may be opened on the ground or during unpressurized flight.

b. Cabin *Windows.* The outer cabin windows, constructed of two-ply stretched acrylic, are of the pressure type and are an integral part of the pressure vessel. Each cabin window is equipped with a pull down shade which allows individual adjustment of outside light transmission.

2-11. SEATS.

a. *Pilot's and Copilot's* Seats. The controls for vertical height adjustment and fore and aft travel are located under each seat. The forward and aft adjustment handle is located beneath the lower front inboard corner of each seat. Pulling up on the handle allows the seat to move fore or aft. The height adjustment handle is located beneath the lower front outboard corner of each seat. Pulling up on the handle allows the seat to move up and down. Both seats have moveable headrests and armrests which will raise and lower for access to the cockpit. Handholds on either side of the overhead panels and a fold-away protective pedestal step are provided for pilot and copilot entry into the cockpit. For the storage of maps and the operator's manual, pilot's and copilot's seats have an inboard-slanted, expandable pocket affixed to the lower portion of the seat back.

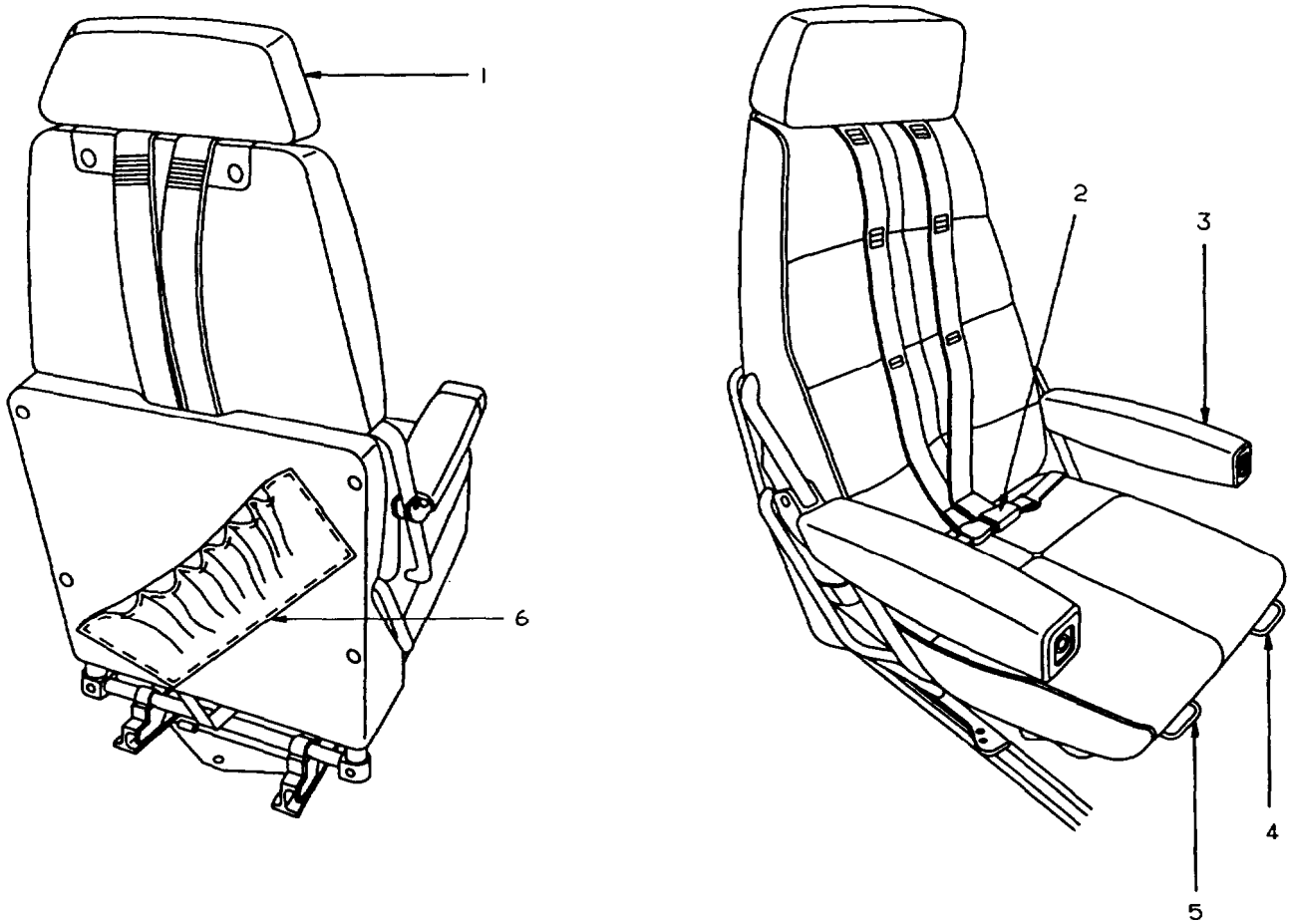

1.ADJUSTABLE HEADREST
2.SEATBELT/SHOULDER HARNESS BUCKLE
3.MOVEABLE ARMREST
4.SEAT HEIGHT ADJUSTMENT (PILOT), FORE AND AFT ADJUSTMENT (COPILOT)
5.SEAT FORE AND AFT ADJUSTMENT (PILOT). HEIGHT ADJUSTMENT (COPILOT)
6.EXPANDABLE MAP POCKET

A968WO2CO237 C

Figure 2-10. Pilot's and Copilot's Seats

Pocket openings are held closed by shock cord tension (fig. 2-10).

b, Pilot's and Copilot's Seat Belts and Shoulder Harnesses. The pilot's and copilot's seats are each equipped with a lap-type seat belt and shoulder harness connected to an inertia reel. The shoulder harness belt is of the Y configuration with the single strap being contained in an inertia reel attached to the base of the seatback. The two straps are worn with one strap over each shoulder and fastened by metal loops into the seat belt buckle. The inertia reel keeps the harness snug but will allow normal movement required during flight operations. The inertia reel is designed with a locking device that will secure the harness in the event of sudden forward movement or an impact action.

Section II. EMERGENCY EQUIPMENT

2-12. DESCRIPTION.

The equipment covered in this section includes all emergency equipment, except that which forms part of a complete system. For example, landing gear system, etc. Chapter 9 describes the operation of emergency exits and location of all emergency equipment.

2-13. HAND-OPERATED FIRE EXTINGUISHER.

WARNING

Repeated or prolonged exposure to high concentrations of monobromotrifluoromethane (CF_3Br) or decomposition products should be avoided. The liquid shall not be allowed to come into contact with the skin, as it may cause frost bite or low temperature burns because of its very low boiling point.

One hand-operated fire extinguisher is mounted below the pilot's seat and a second extinguisher is located in the left cabin sidewall, aft of the cabin door. They are of the monobromotrifluoromethane (CF_3Br) type. Each extinguisher is charged to a pressure of 150 to 170 PSI and emits a forceful stream. Use an extinguisher with care within the limited area of the cabin to avoid severe splashing.

NOTE

Engine fire extinguisher systems are described in Section III.

Section III. ENGINES AND RELATED SYSTEMS

2-14. ENGINES.

The aircraft is powered by two PT6A-42 turboprop engines, rated at 850 SHP each (fig. 2-11). Each engine is equipped with a hydraulically controlled, reversible, constant-speed, four-blade, full-feathering propeller. The engines are reverse-flow free turbines, and each employs a three-stage axial compressor and a single-stage centrifugal compressor in combination, driven by the gas generator turbine. The gas generator turbine and the two power turbines are in line and have opposite rotations. The power turbines are connected through planetary reduction gearing to a flanged propeller shaft. The oil tank, filler cap and dipstick are an integral part of the engine.

NOTE

The engine anti-ice system (ice vanes) should be on (extended) for all ground operations to minimize ingestion of ground debris. Turn off engine anti-ice (retract ice vanes) to maintain engine temperatures within limits.

The ram air supply enters the lower portion of the nacelle and is drawn in through the aft protective screens. The air is then routed into the compressor. After the air is compressed, it is forced into the annular combustion chamber and mixed with fuel that is sprayed in through 14 nozzles mounted around the gas generator case. A capacitance discharge ignition unit and two spark igniter plugs are used to start combustion. After combustion, the exhaust passes through the compressor turbine and two stages of power turbines, then is routed through two exhaust ports near the front of the engine. A pneumatic fuel control system schedules fuel flow to maintain power set by the gas generator POWER lever. The accessory drive at the aft end of the engine provides power to drive the fuel pumps, fuel control, oil pump, refrigerant compressor (right engine), starter/generator, and the tachometer generator. The reduction gearbox forward of the power turbine provides gearing for the propeller and drives the propeller tachometer generator, the propeller overspeed governor, and the propeller primary governor.

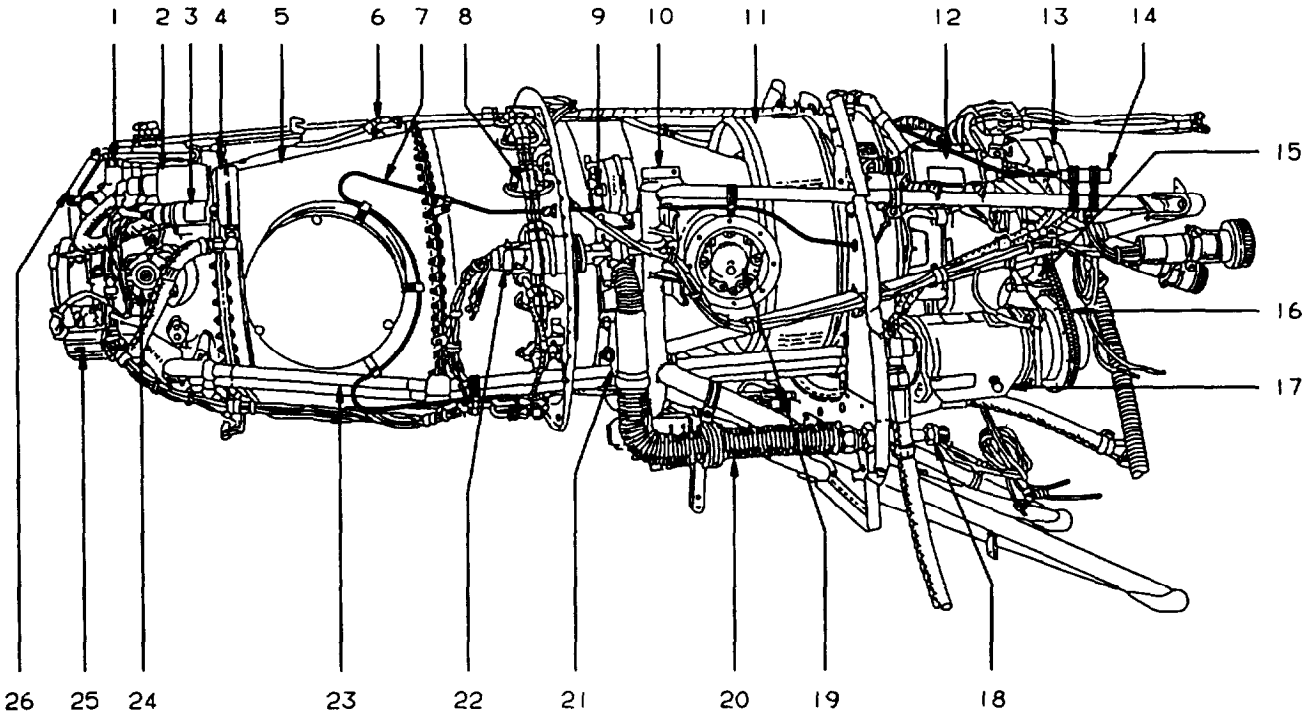

1. Primary Prop Governor
2. Torque Pressure Transmitter
3. Torque Pressure Switch
4. Torque Pressure Manifold
5. Exhaust Duct
6. ITT Temperature Probe
7. Fire Detector Tube
8. Fuel Flow Divider Manifold
9. Engine Mount Bolt
10. Engine Mount Truss Assembly
11. Engine Air Intake Screen
12. Ignition Exciter
13. Starter-Generator
14. Fire Detector
15. Fuel Boost Pump
16. Air Conditioner Compressor Drive
17. Air Conditioner Compressor (#2 Engine only)
18. Bleed Air Adopter
19. Bleed Air Valve (low pressure)
20. Bleed Air Line
21. Engine Mount
22. Ignition Exciter Plug
23. Overspeed Governor
24. Over-speed Governor
25. Prop Deice Brush Block Bracket
26. Prop Reverse Linkage Lever

A968WOODO230 C

Figure 2-11. Engine (Sheet *1* of 2)

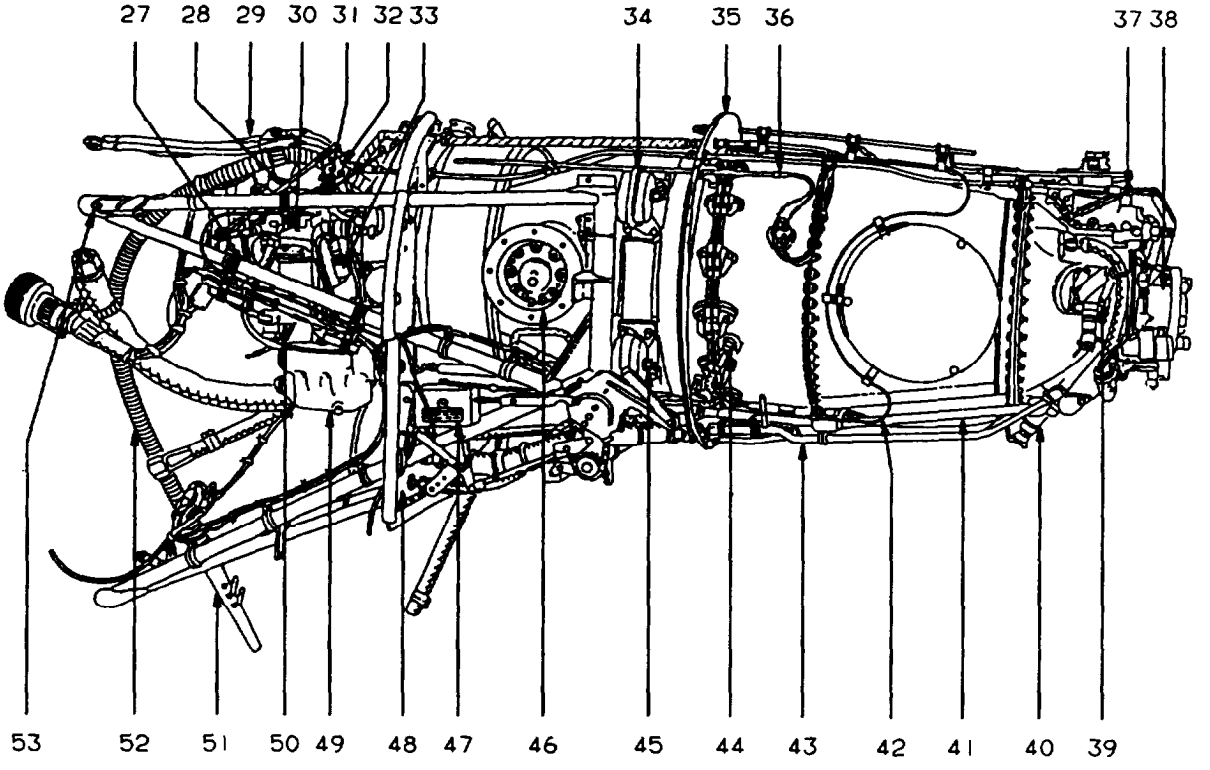

27. Fuel Control Unit
28. Fuel Control Unit Control Rod
29. Starter Generator Leads
30. Engine Driven Fuel Pump
31. Power Control Lever
32. Prop Interconnect Linkage (Aft)
33. Oil Pressure Transducer
34. Engine Mount
35. Fireshield
36. Trim Resistor Thermocouple
37. Prop Interconnect Linkage (Fore)
38. Prop Shaft
39. Prop Tach Generotor (N2)
40. Chip Detector
41. Oil Pressure Tube
42. Fire Detector Tube
43. Fire Extinguisher Line
44. Ignition Exciter PlUg
45. Engine Mount Bolt
46. Bleed Air Valve (high pressure)
47. Linear Actuator
48. Engine Baffle And Seal Assy
49. Fuel/Oil Heater
50. Tach-Generator (Aft) (N1)
51. Drain Manifold
52. Overhead Breather Tube
53. Engine Truss Mounting Bolt

A968W0000231 C

Figure 2-11. Engine (Sheer 2 of 2)

2-15. ENGINE COMPARTMENT COOLING.

The forward engine compartment, including the accessory section, is cooled by air which enters around the exhaust stack cutouts and through the gap between the propeller spinner and forward cowling, and exhausts through louvers in the upper forward and aft cowling.

2-16. AIR INDUCTION SYSTEMS - GENERAL.

Each engine and oil cooler receives ram air ducted from separate air inlets located within the lower section of the forward nacelle. Induction system components protect the power plant from icing and reduce the possibility of foreign object damage.

2-17. FOREIGN OBJECT DAMAGE CONTROL.

The engine has an integral air inlet screen designed to obstruct objects large enough to damage the compressor.

NOTE

The engine anti-ice system (ice vanes) should be on (extended) for all ground operations to minimize ingestion of ground debris. Turn off engine anti-ice (retract ice vanes) to maintain engine temperatures within limits.

2-18. ENGINE ICE PROTECTION SYSTEMS.

a. *Inertial* Separator. An inertial separation system is built into each engine air inlet to prevent moisture particles from entering the engine inlet plenum under icing conditions. A movable vane and a bypass door are lowered into the airstream when operating in visible moisture at 5 °C or colder, by energizing electrical actuators with the switches, placarded **LEFT** and **RIGHT ENGINE ANTI-ICE - ON - OFF,** located on the pilot's subpanel (fig. 2-6). The system incorporates an electrical back-up system which operates identically to the main system. The back-up ice vane system is controlled by two switches placarded **LEFT and RIGHT ACTUATOR - MAIN - STANDBY,** located on the pilot's subpanel (fig. 2-6). If the main system fails, placing the switch in the **STANDBY** position will allow use of the back-up system. Electrical protection is provided through two 5-ampere circuit breakers placarded **LEFT** and **RIGHT MN ENG ANTI-ICE** and two 5-ampere circuit breakers placarded **LEFT** and **RIGHT STBY ENG ANTI-ICE,** located on the right sidewall circuit breaker panel (fig. 2-7).

b. Engine Ice Protection *Systems Operation.* The vane deflects the ram airflow slightly downward to introduce a sudden turn in the airflow to the engine. Because of their greater momentum the particles continue undeflected and are discharged overboard.

Once the ice vane system is actuated, the extended position of the vane and bypass door is indicated by green annunciators, placarded **L** and **R ENG ANTI-ICE,** located on the caution/advisory panel. If for any reason the vane(s) do not attain the selected position within 33 seconds, an amber **L** or **R ENG ICE FAIL** annunciator will illuminate on the caution/advisory panel. In this event, the appropriate **LEFT** or **RIGHT ACTUATOR** switch should be placed in the **STANDBY** position. Once the vane is successfully positioned, using the standby system, the amber annunciator(s) will extinguish and the applicable green **LEFT** or **RIGHT ENG ANTI-ICE** annunciator(s) will illuminate.

c. *Engine* Anti-Ice System.

(I) Air in/et. A small duct, which faces into the exhaust flow in the left exhaust stack of each engine, diverts a small portion of the engine exhaust gases to the engine air inlet lip. The gases are circulated through the engine air inlet lip and then exhausted through a duct in the right exhaust stack. The continuous flow of hot engine exhaust gases heats the engine air inlet lip, preventing the formation of ice.

(2) *Fuel heater.* An oil-to-fuel heat exchanger, located in the engine accessory case, operates continuously and automatically to heat the fuel sufficiently to prevent ice from collecting in the fuel control unit.

(3) *Fuel Control Heat.* The engine fuel control unit is protected from icing by the fuel control heater, which is actuated by movement of its respective condition lever. The fuel control heater circuit breaker, placarded **LEFT** and **RIGHT FUEL CONTROL HEAT,** is located on the right sidewall circuit breaker panel (fig. 2-7).

2-19. ENGINE FUEL CONTROL SYSTEM.

a. Description. The basic fuel system for each engine consists of an engine driven fuel pump, a fuel control unit, a fuel flow divider, a dual fuel manifold, fourteen fuel nozzles, and a purge system. The fuel purge system forces residual fuel from the manifolds to the combustion chamber where it is consumed.

b. Fuel Control Unit. The fuel control unit is mounted on the accessory case of the engine. The unit is a hydro-pneumatic metering device which determines the proper fuel flow schedule required for the engine to produce the amount of power requested by the relative position of the associated **POWER** lever. The control of developed engine power is accomplished by adjusting the engine gas generator (N_1) speed. N_1 speed is controlled by varying the amount of fuel injected into the combustion chamber through the fue1 nozzles. Engine shutdown is accomplished by moving the appropriate **CONDITION** lever to

the full aft **FUEL CUTOFF** position, which shuts off the fuel supply.

2-20. POWER LEVERS.

CAUTION

Moving the **POWER** lever below the flight idle gate without the associated engine running may result in damage to the reverse mechanism linkage.

The two POWER levers are located on the control pedestal (fig. 2-12), and are placarded **POWER.** These levers regulate power in the reverse, idle and forward ranges, operating so that forward movement increases engine power. Power control is accomplished through adjustment of the N_1 speed governor in the fuel control unit. Power is increased when N_1 RPM is increased. The **POWER** levers also control propeller reverse pitch. Distinct movement (pulling up and then aft on the **POWER** lever) by the pilot is required for operation in the ground fine and reverse ranges. Forward lever travel range is designated **INCR** (increase), supplemented by an arrow pointing forward. Lever travel range is marked **IDLE, LIFT, GROUND FINE, LIFT,** and **REVERSE.** A placard below the lever slots reads: **CAUTION - REVERSE ONLY WITH ENGINES RUNNING**

2-21. CONDITION LEVERS.

The two **CONDITION** levers are located on the control pedestal (fig. 2-12). Each lever starts and stops the fuel supply, and controls the idle speed for its respective engine. The levers have three placarded positions: **FUEL CUTOFF, LOW IDLE,** and **HIGH IDLE.** In the **FUEL** CUTOFF position, the **CONDITION** lever controls the cutoff function of its engine-mounted fuel control unit. From **LOW IDLE** to **HIGH IDLE,** they control the governors of the fuel control units to establish minimum fuel flow levels. **LOW IDLE** position sets the fuel flow rate to attain approximately 61% N_1 and **HIGH IDLE** position sets the rate to attain approximately 70% N_1. The **POWER** lever for the corresponding engine can select N_1 from the respective idle setting, up to maximum power. An increase in low idle N_1 will be experienced at high field elevation.

2-22. FRICTION LOCK KNOBS.

Friction drag of the engine and propeller control levers is adjusted, as applicable, by four friction lock knobs. The friction lock knobs, placarded **FRICTION LOCK** are located on the control pedestal (fig. 2-12). One knob is below the propeller levers, one is below the **CONDITION** levers, and two are below the **POWER** levers. When a knob is rotated clockwise, friction is increased, opposing movement of the affected lever as set by the pilot. Counterclockwise rotation of the knob will decrease friction, thus permitting free and easy lever movement.

2-23. ENGINE FIRE DETECTION SYSTEM.

a. Description. A fire detection system (fig. 2-13) is installed to provide an immediate warning in the event of a fire or overtemperature in each engine compartment. The system consists of a temperature sensing cable for each engine; two red warning annunciators placarded **L ENG FIRE** and **R ENG FIRE,** located on the warning annunciator panel; a test switch on the copilot's left subpanel, and a S-ampere circuit breaker, placarded **FIRE DET** on the right sidewall circuit breaker panel. The test switch, placarded **TEST SWITCH ENG FIRE SYS, EXT L** and **R,** and **DET** L and R, is located on the copilot's subpanel. When the test switch is placed in the **DET L** or **R** position, the corresponding **L ENG FIRE** or **R ENG FIRE** annunciator on the warning annunciator panel and the **MASTER WARNING** annunciators will illuminate and flash.

NOTE

The system may be tested on the ground or in flight.

When a fire has been extinguished (if the integrity of the system has not been destroyed), the system will reset itself.

2-24. ENGINE FIRE EXTINGUISHER SYSTEM.

a. Description. The engine fire extinguisher system (fig. 2-14) consists of a supply cylinder, an explosive squib, and a valve located in each of the main gear wheel wells. A gage calibrated in PSI is provided on each supply cylinder for determining the level of charge. The extinguishing agent charge level should be checked during each preflight. When fired, the explosive squib opens the valve, releasing all of the pressurized extinguishing agent into a plumbing network. The plumbing network terminates in spray nozzles, strategically located in the probable fire areas of the engine compartment, which distribute the extinguishing agent.

b. Operation. The fire extinguisher control switch-indicators which are used to discharge the extinguisher system are located on the glareshield at each end of the warning annunciator panel. Each push to activate switch-indicator consists of three annunciators: A red annunciator placarded **D,** indicates that the system has been discharged, a green annunciator placarded **OK** is provided for system test. To discharge the extinguisher, raise the safety wired clear plastic cover and depress the **ENG**

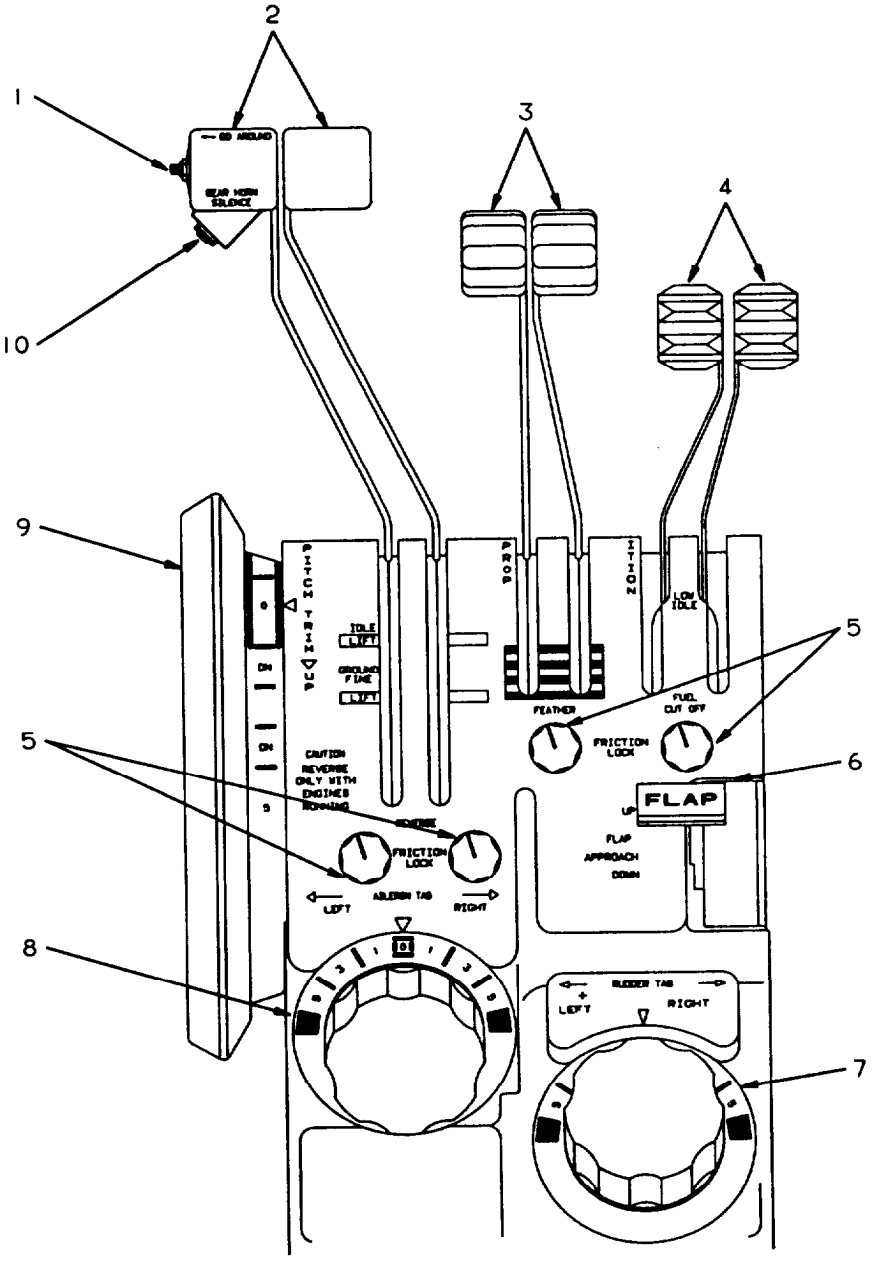

CONTROL PEDESTAL

1. Go Around Switch
2. Power Levers
3. Propeller Levers
4. Condition Levers
5. Friction Lock Knobs
6. Flop Switch
7. Rudder Trim Control
8. Atleron Trim Control
9. Elevator Trim Control
IO. Landing Gear Warning Horn Silence Switch

A968W02C0229 C

Figure 2-12. Control Pedestal and Pedestal Extension (Sheer 1 of 3)

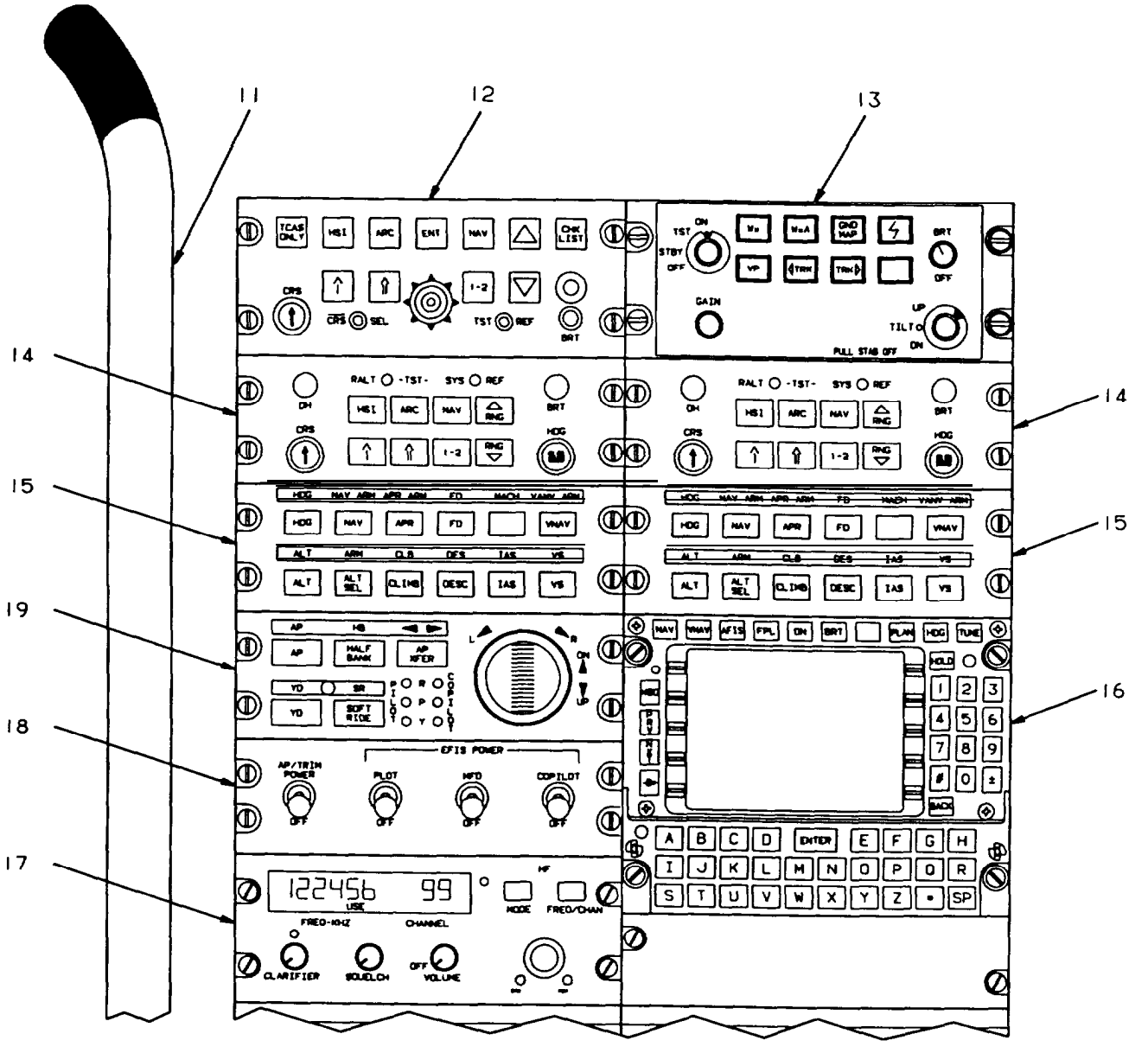

PEDESTAL EXTENSION (FORWARD HALF)

11. Alternate Landing Gear Extension Pump Handle
12. Multifunction Display Control Panel
13. Weather Radar Control Panel
14. EFIS Control Panel
15. Flight Director Mode Selector
16. Flight Management System Control Unit
17. HF Transceiver Control Unit
18. Autopilot/Electric Trim/EFIS Power Switch Panel
19. Autopilot Controller

BWO2C970297 C

Figure 2-12. Control Pedestal and Pedestal Extension (Sheet 2 of 3)

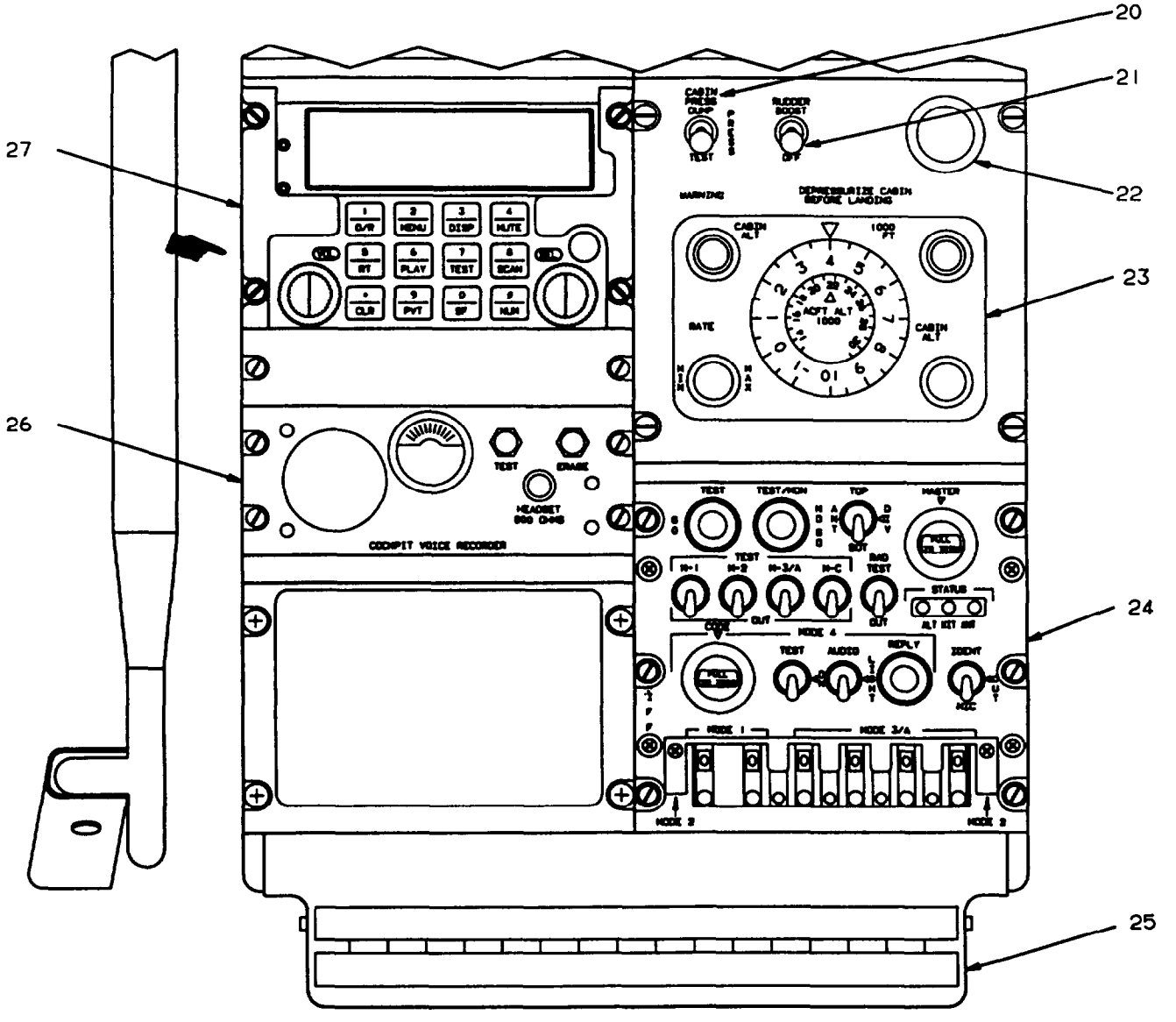

PEDESTAL EXTENSION (AFT HALF)

20. Cabin Pressurization Switch
21. Rudder Boost Switch
22. Cigarette Lighter
23. Cabin Pressurization Controller
24. Transponder Control Panel
25. Assist Step
26. Cockpit Voice Recorder Control Unit
27. AM/FM (VHF/UHF) Transceiver Control Unit

BW02C982457 C

Figure 2-12. Control Pedestal and Pedestal Extension (Sheet 3 of 3)

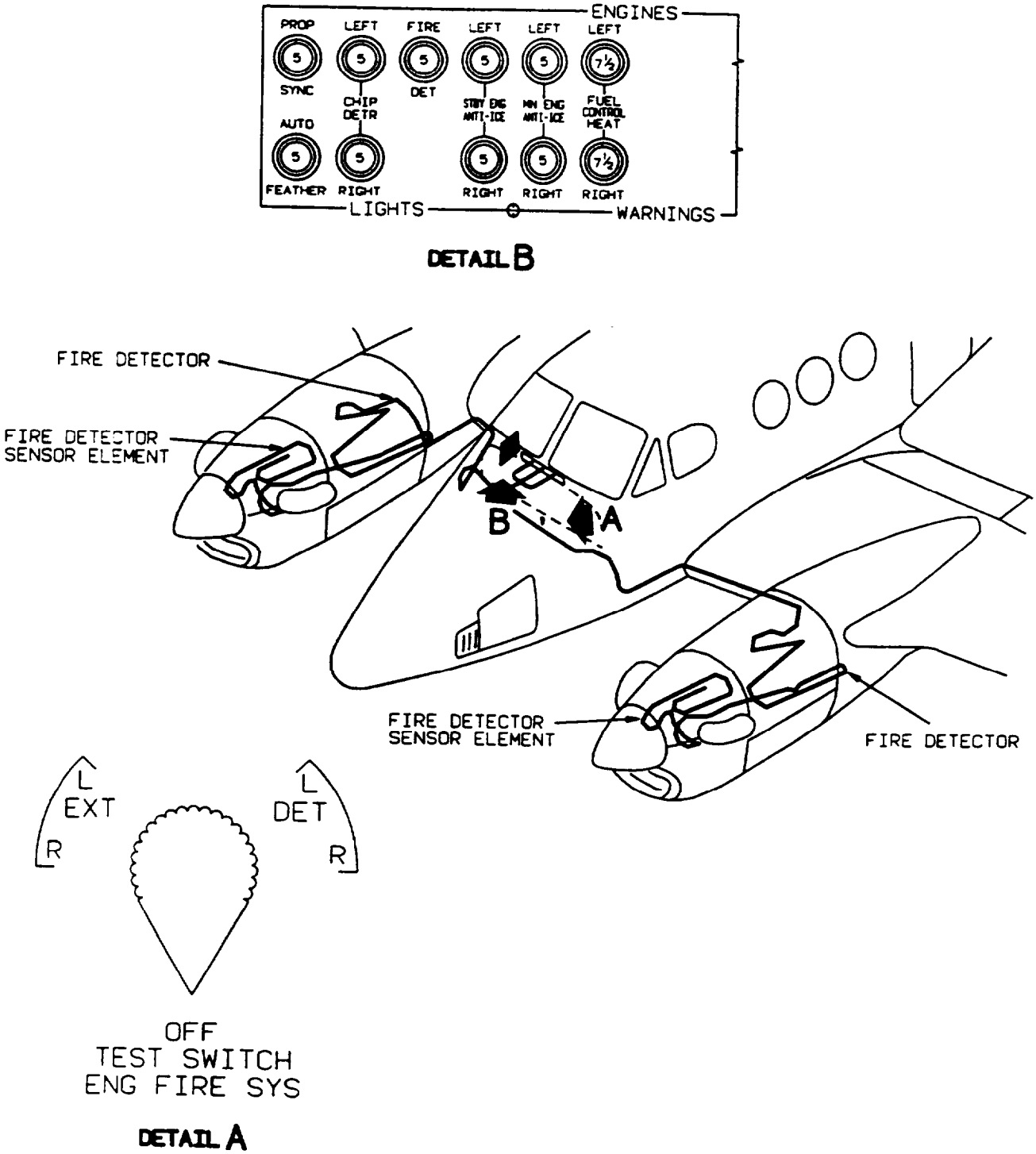

Figure 2-13. Engine Fire Detection System

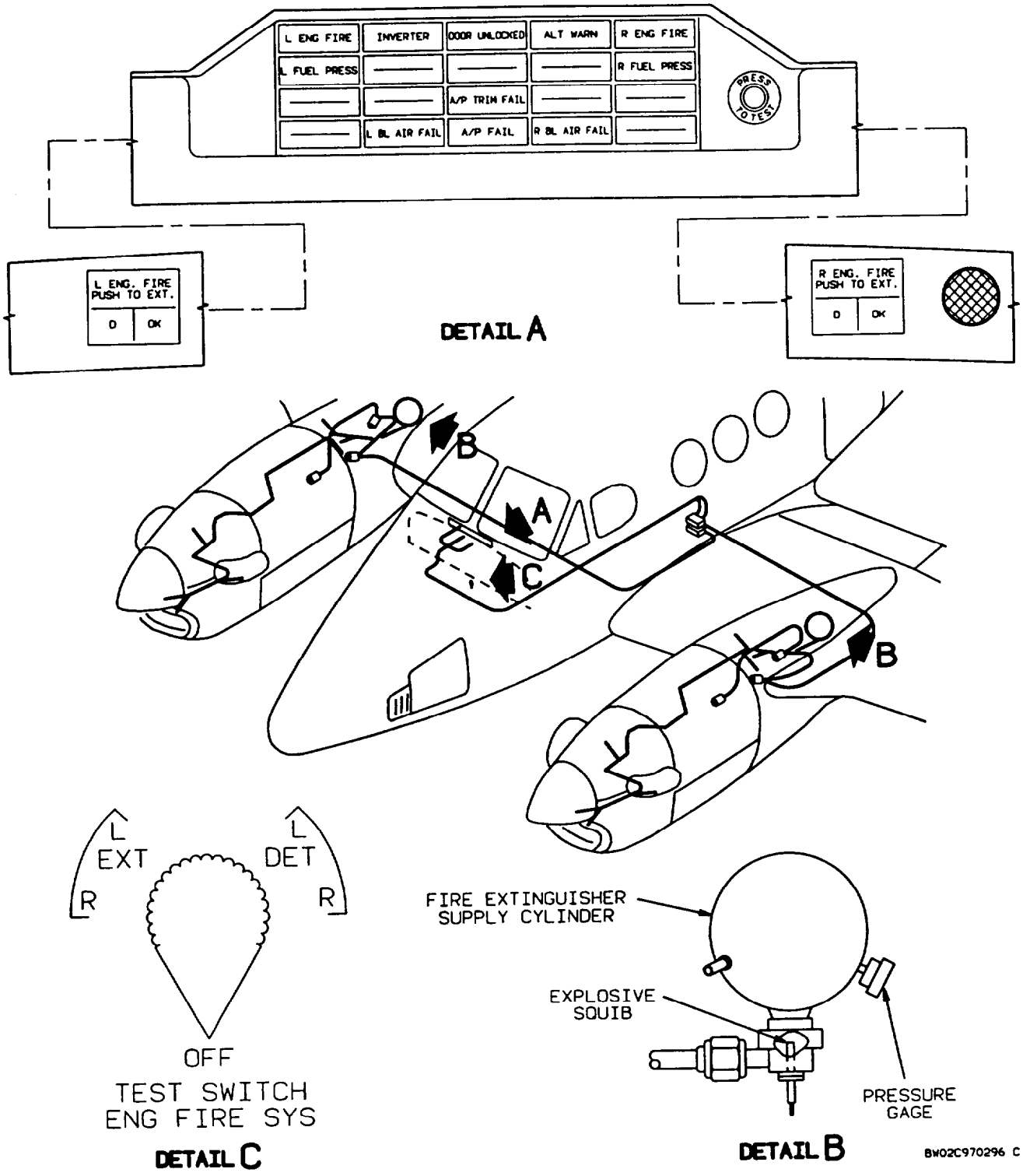

Figure 2-14. Engine Fire Extinguisher System

FIRE - PUSH TO EXT switch-indicator. These controls receive power from the hot battery bus. The fire extinguisher will be completely expended upon activation. The amber **D** annunciator will illuminate and remain illuminated, regardless of battery switch position until the pyrotechnic cartridge has been replaced.

c. Fire Extinguisher Test Switch. The fire extinguisher system-test switch is used to test the circuit integrity of the fire extinguishing system. During preflight the pilot should rotate the **TEST SWITCH** to the **EXT R** and **EXT L** positions and verify the illumination of the amber **D** annunciator and the green OK annunciator on each fire extinguisher activation switch on the glareshield.

d. Fire Extinguisher Pressure Gage. A gage, calibrated in PSI, is provided on each fire extinguisher supply cylinder for determining the level of charge. The gages should be checked during preflight (table 2-1).

2-25. OIL SUPPLY SYSTEM.

CAUTION

Maximum allowable oil consumption is one quart in 5 hours of engine operation.

a. The engine oil tank is integral with the air-inlet casting located forward of the accessory gearbox. Oil for propeller operation and lubrication of the reduction gearbox and engine bearings is supplied by an external line from the high pressure pump. Two scavenge lines return oil to the tank from the propeller reduction gearbox. A non-congealing, external oil cooler keeps the engine oil temperature within operating limits. The capacity of each engine oil tank is 2.5 U.S. gallons. The total system capacity for each engine, which includes the oil tank, oil cooler, lines, etc., is approximately 3.5 U.S. gallons. The oil level is indicated by a dipstick attached to the oil filler cap. Oil grade, specifications, and servicing points are described in Section XII, Servicing, Parking, and Mooring.

b. The oil system of each engine is coupled to an oil cooler unit (radiator) of fin-and-tube design. The oil cooler unit, located in the lower aft nacelle below the engine air intake, is the only airframe mounted part of the oil system. Each oil cooler incorporates a thermal bypass valve which assists in maintaining oil at the proper temperature range for engine operation.

2-26. ENGINE IGNITION SYSTEM.

a. Description. The basic ignition system for each engine consists of a solid state ignition exciter unit, two igniter plugs, two shielded ignition cables, pilot controlled **IGNITION AND ENGINE START** switches, and the **ENG AUTO IGNITION** switches (fig. 2-6). Placing either **ENGINE START** switch to the **ON** position will cause the respective engine to motor and igniter plugs to spark, igniting the fuel/air mixture sprayed into the combustion chamber by the fuel nozzles. The ignition system is activated for ground and air starts, but is switched off after combustion light up.

b. Ignition and Engine Stat-t Switches. TWO three-position toggle switches, placarded **IGNITION AND ENGINE START, LEFT** and **RIGHT, ON, OFF,** and **STARTER ONLY,** are located on the pilot's subpanel (fig. 2-6). These switches will initiate starter motoring and ignition in the ON position, or will motor the engine in the STARTER ONLY position. The ON switch position completes the starter circuit for engine rotation, energizes the igniter plugs for fuel combustion, and activates the respective **L IGNITION ON or R IGNITION ON** annunciator on the caution/advisory annunciator panel. The center switch position is **OFF.** Two 5-ampere circuit breakers on the left sidewall circuit breaker panel (fig. 2-15), placarded **LEFT** and **RIGHT IGNITOR POWER,** protect the ignition circuits. Two 5-ampere circuit breakers on the left sidewall circuit breaker panel, placarded **LEFT** and **RIGHT START CONTROL,** protect the starter control circuits.

2-27. AUTO IGNITION SYSTEM.

If armed, the auto ignition system automatically energizes both igniter plugs of either engine, should an accidental flameout occur. The system is not essential to normal engine operation, but is used to reduce the possibility of power loss due to icing or other conditions. Each engine has a separate **ENG AUTO IGNITION** control switch (fig. 2-6) and a green annunciator, **LEFT IGNITION ON** and **RIGHT IGNITION ON,** located on the caution/advisory annunciator panel. Auto ignition is accomplished by energizing both igniter plugs in each engine.

Table 2-1. Engine Fire Extinguisher Gage Pressure

TEMP °C	-40	-29	-18	-06	04	16	27	38	4 8
PSI	190 to 240	220 to 275	250 to 315	290 t0 365	340 to 420	390 to 480	455 to 550	525 to 635	605 to 730

BT00194

NOTE

The system should be turned **OFF** during extended ground operation to prolong the life of the igniter plugs.

a. Auto ignition Switches. Two switches located on the pilot's subpanel (fig. 2-6), each placarded **ENG AUTO IGNITION - ARM, LEFT and RIGHT,** control the auto ignition systems. The ARM position initiates a readiness mode for the auto ignition system of the corresponding engine. The system is disarmed when in the **OFF** position. Each circuit is protected by the corresponding 5-ampere **LEFT** or **RIGHT IGNITOR POWER** circuit breaker on the left sidewall circuit breaker panel (fig. 2-15).

b. Auto Ignition Annunciators. If an armed auto ignition system changes from a ready condition to an operating condition (energizing the igniter plugs in the engine) the corresponding engine's green **L** or R **IGNITION ON** annunciator will illuminate, indicating that the ignitors are energized. The auto ignition system is triggered from a ready condition to an operating condition when engine torque drops below approximately 20%. Therefore, when an auto ignition system is armed, the igniters will be energized continuously during the time when an engine is operating at a level below approximately 20% torque.

2-28. ENGINE STARTER-GENERATORS.

One starter-generator is mounted on the accessory drive section of each engine. Each starter-generator is able to function either as a starter or as a generator. In the starter function, 24 volts DC is required to power rotation. In the generator function, each unit is capable of 250 amperes DC output. When the starting function is selected, the starter control circuit receives power from either the aircraft battery or an external power source through the respective 5-ampere **LEFT** or **RIGHT START CONTROL** circuit breaker, located on the left sidewall circuit breaker panel (fig. 2-15). When the generating function is selected, the starter-generator provides electrical power.

2-29. ENGINE INSTRUMENTS.

The engine instruments are arranged vertically near the center of the instrument panel (fig. 2-16). The circuit breakers for all engine instruments are located on the left sidewall circuit breaker panel. All engine instrument circuit breakers are fed through the 7 1/2-ampere **LEFT** and **RIGHT ENG INSTR POWER** circuit breakers located on the right sidewall circuit breaker panel.

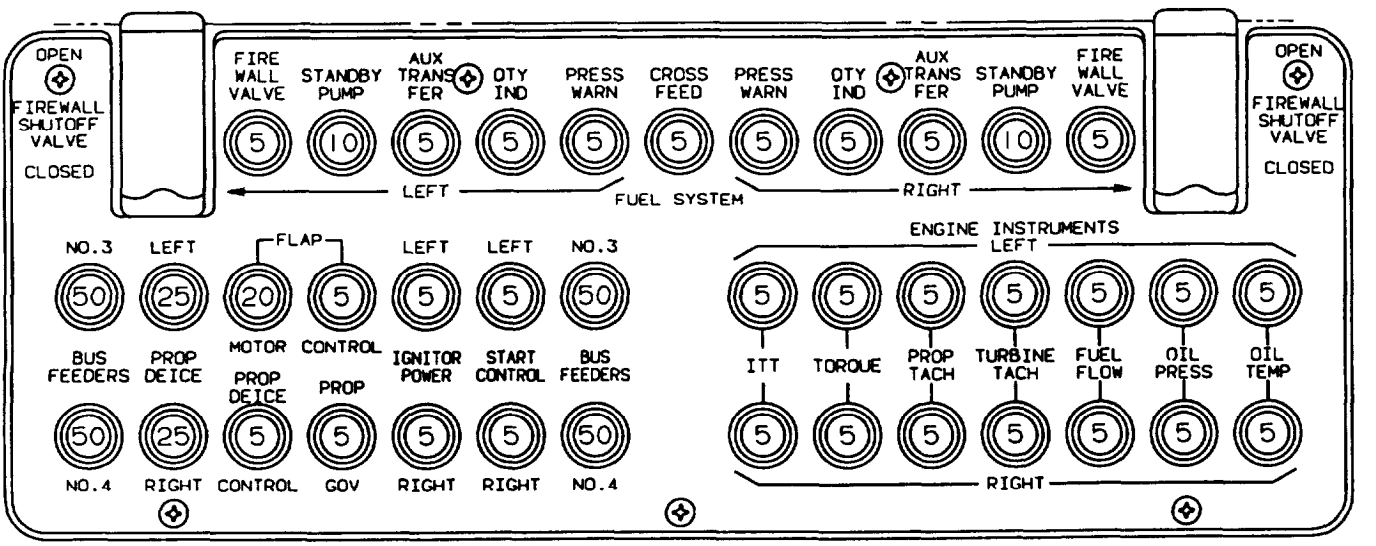

A95BWO2CO46I C

Figure 2-15. Left Sidewall Circuit Breaker Panel

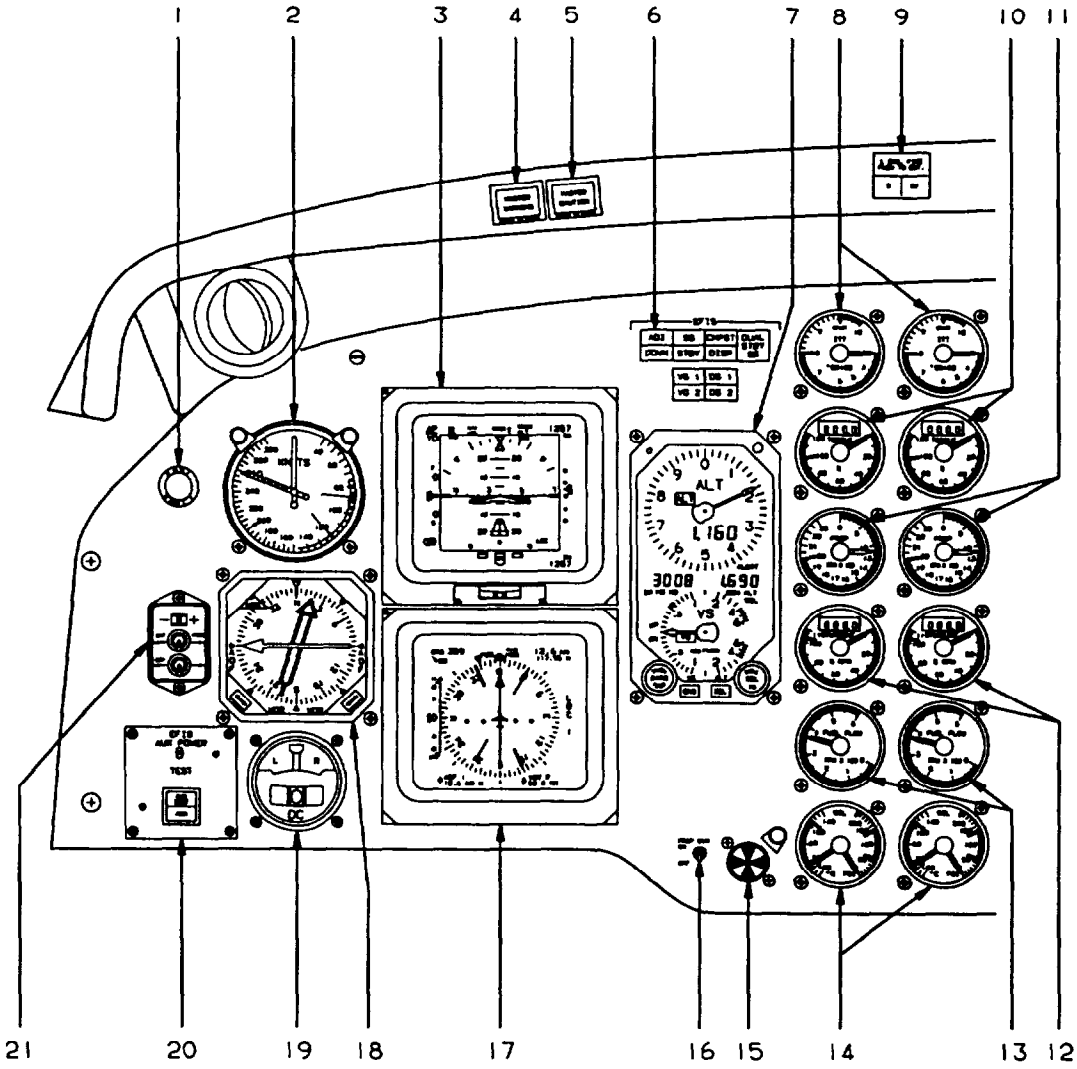

1. Vertical Gyro FAST ERECT Switch
2. Airspeed Indicator
3. Electronic Attitude Director Indicator (EADI)
4. MASTER WARNING Switch-Indicator
5. MASTER CAUTION Switch-Indicator
6. EFIS Switch-Indicators
7. Altitude/Vertical Speed Indicator/Control
8. Interstage Turbine Temperature Gages
9. Engine Fire Detection/Extinguisher Switch-Indicators
10. Torquemeters
11. Propeller Tachometers
12. Turbine Tachometers
13. Fuel Flowmeters
14. Oil Temperature/Pressure Gages
15. Propeller Synchroscope
16. Propeller Synchrophaser Control Switch
17. Electronic Horizontal Situation Indicator (EHSI)
18. Radio Magnetic Indicator
19. Turn and Slip Indicator
20. EFIS Auxiliary Power Control Panel
21. Compass Slaving Control Panel

A958W02C0354 C

Figure 2-16. Instrument Panel (Sheet 1 of 2)

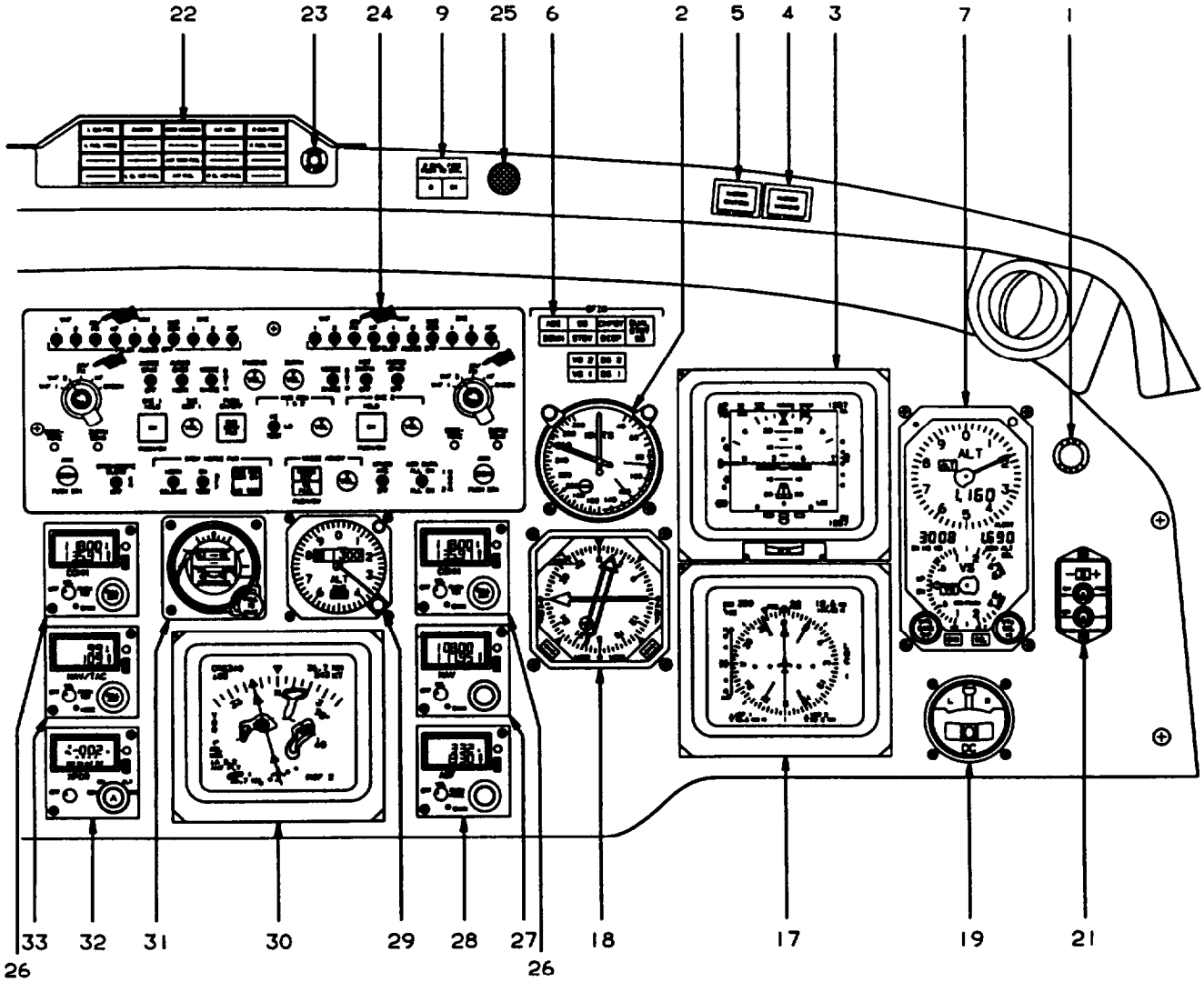

22. Warning Annunciator Panel
23. Annunciator Test Switch
24. Audio Control Panel
25. Cockpit Votce Recorder Microphone
26. Communications Transceiver Control Unit
27. Navigation Receiver Control Unit
28. ADF Receiver Control Unit
29. Standby Altimeter
30. Multfunction Display
31. Standby Attitude Indicator
32. Transponder Control Panel
33. Navigation/TACAN Receiver Control Unit

BW02C
984687AA

Figure 2-16. Instrument Panel (Sheet 2 of 2)

a. Interstage Turbine Temperature Indicators. The two IIT gages on the instrument panel (fig. 2-16) are calibrated in degrees Celsius. Each gage is connected to thermocouple probes located in the hot gases between the turbine wheels. The gages indicate the temperature between the compressor turbine and power turbine section for the corresponding engine. The interstage turbine temperature gage circuits are protected by individual 5-ampere **LEFT** and **RIGHT ITT** circuit breakers, located on the left sidewall circuit breaker panel (fig. 2-15).

b. *Engine Torquemeters.* Two torquemeters on the instrument panel (fig. 2-16) indicate torque in percent of maximum being applied to the propeller shaft of the respective engine (fig. 2-11). The torquemeter circuits are protected by individual S-ampere **LEFT** and **RIGHT TORQUE** circuit breakers, located on the left sidewall circuit breaker panel (fig. 2-15).

c. Turbine Tachometers. Two tachometers on the instrument panel (fig. 2-16) indicate compressor turbine RPM (N_1) for the respective engine (fig. 2-11) as a percentage of maximum gas generator RPM. Each instrument is slaved to a tachometer generator attached to the respective engine. The turbine tachometer circuits are protected by individual S-ampere **LEFT** and **RIGHT TURBINE TACH** circuit breakers, located on the left sidewall circuit breaker panel (fig. 2-15).

d. Fuel *Flow* Indicators. Two gages on the instrument panel (fig. 2-16) indicate the rate of flow for consumed fuel as measured by sensing units coupled into the fuel supply lines of the respective engines. The fuel flow indicators are calibrated in increments of hundreds of pounds per hour. Fuel flow indicator circuits are protected by individual 5-ampere **LEFT** and **RIGHT FUEL FLOW** circuit breakers, located on the left sidewall circuit breaker panel (fig. 2-15).

e. Oil Pressure/Oil Temperature Indicators. Two gages on the instrument panel (fig. 2-16) indicate oil pressure in PSI and oil temperature in °C. Oil pressure is taken from the delivery side of the main oil pressure pump. Oil temperature is transmitted by a thermal sensor unit which senses the temperature of the oil as it leaves the delivery side of the oil pressure pump. Each gage is connected to pressure and temperature transmitters installed on the respective engine. The oil pressure circuits are protected by individual 5-ampere **LEFT** and **RIGHT OIL PRESS** circuit breakers, located on the left sidewall circuit breaker panel (fig. 2-15). The oil temperature circuits are protected by individual S-ampere **LEFT** and **RIGHT OIL TEMP** circuit breakers, located on the left sidewall circuit breaker panel (fig. 2-15).

Section IV. FUEL SYSTEM

2-30. FUEL SUPPLY SYSTEM.

The engine fuel supply system (fig. 2-18) consists of two identical systems sharing a common fuel management panel (fig. 2-17) and fuel crossfeed plumbing (fig. 2-19). Each main fuel system consists of five interconnected wing tanks and a nacelle tank. Each auxiliary fuel system consists of one tank located between the nacelle and the fuselage. A fuel transfer pump is located within each auxiliary tank. Additionally, the system has an engine-driven boost pump, a standby fuel pump located within each nacelle tank, a fuel heater (engine oil-to-fuel heat exchanger unit), a tank vent system, a tank vent heating system, and interconnecting wiring and plumbing. Total fuel tank capacity is shown in table 2-2. Gravity feed fuel flow is shown in figure 2-20.

a. *Engine-Driven Boost Pumps.*

CAUTION

Engine operation using only the engine-driven primary (high pressure) fuel pump without standby pump or engine-driven boost pump fuel pressure is limited to 10 cumulative hours. This condition is indicated by illumination of either the **L** or **R FUEL PRESS** warning annunciator and the simultaneous illumination of both **MASTER WARNING** annunciators. All time in this category shall be entered on DA Form 2408-13 for the attention of maintenance personnel.

A gear-driven boost pump mounted on each engine supplies fuel under pressure to the inlet of the engine-driven primary high-pressure pump for engine starting and all normal operations. Either the engine-driven boost pump or electric standby pump is capable of supplying sufficient pressure to the engine-driven primary high-pressure pump and thus maintaining normal engine operation.

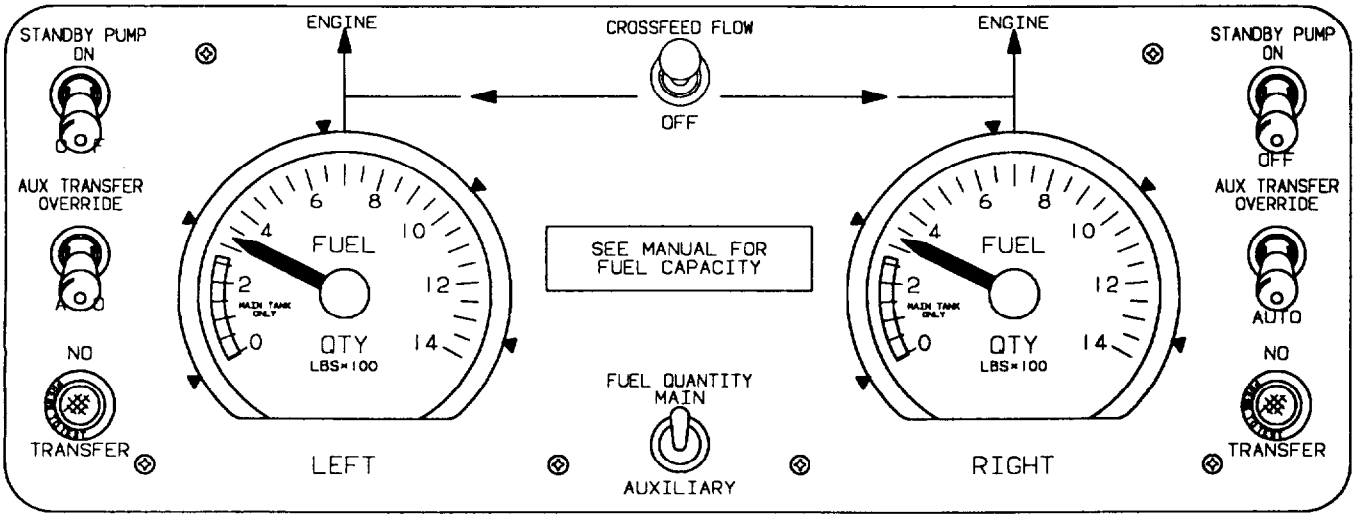

Figure 2-17. Fuel Management Panel

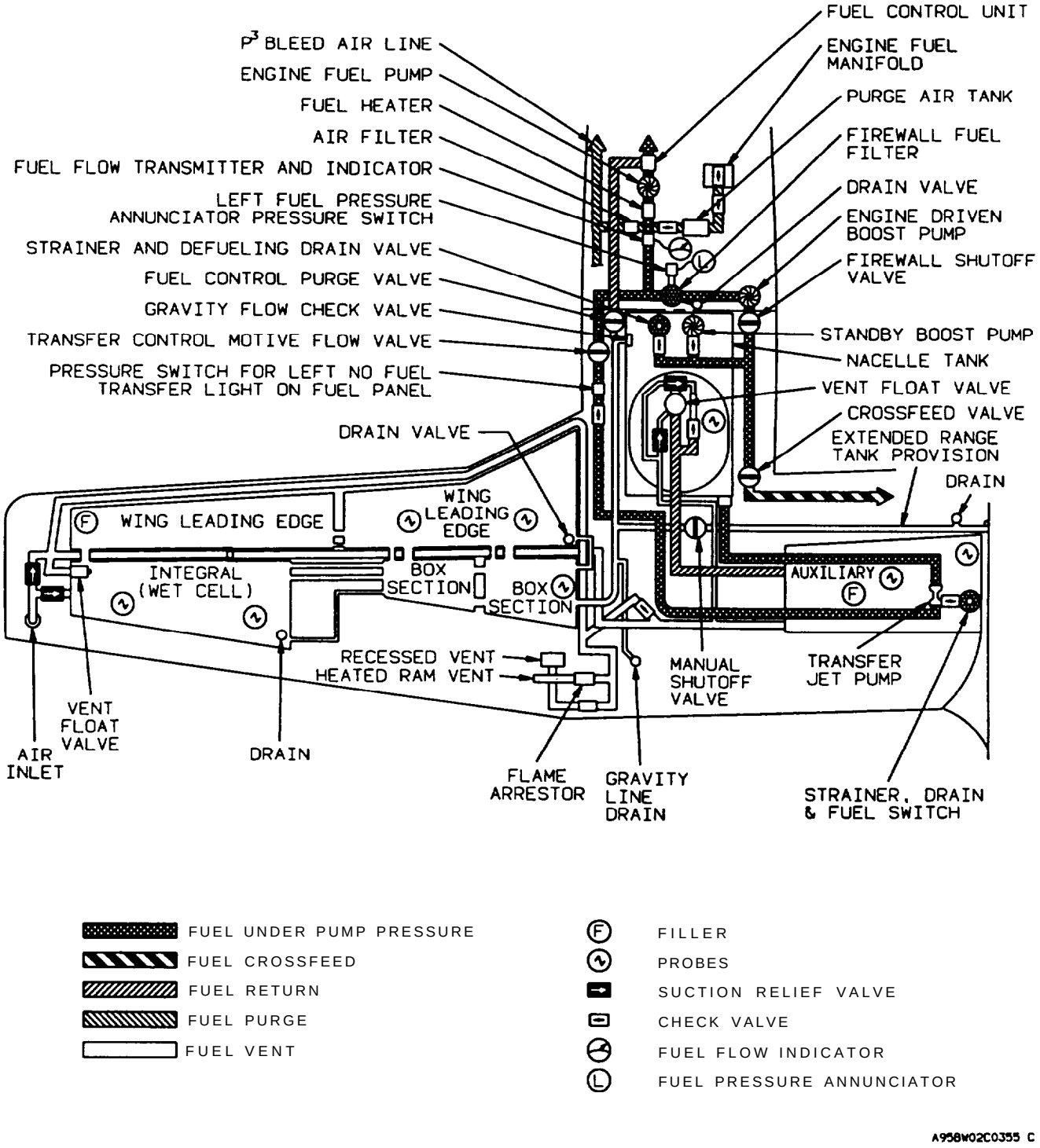

Figure 2-18. Fuel System Schematic

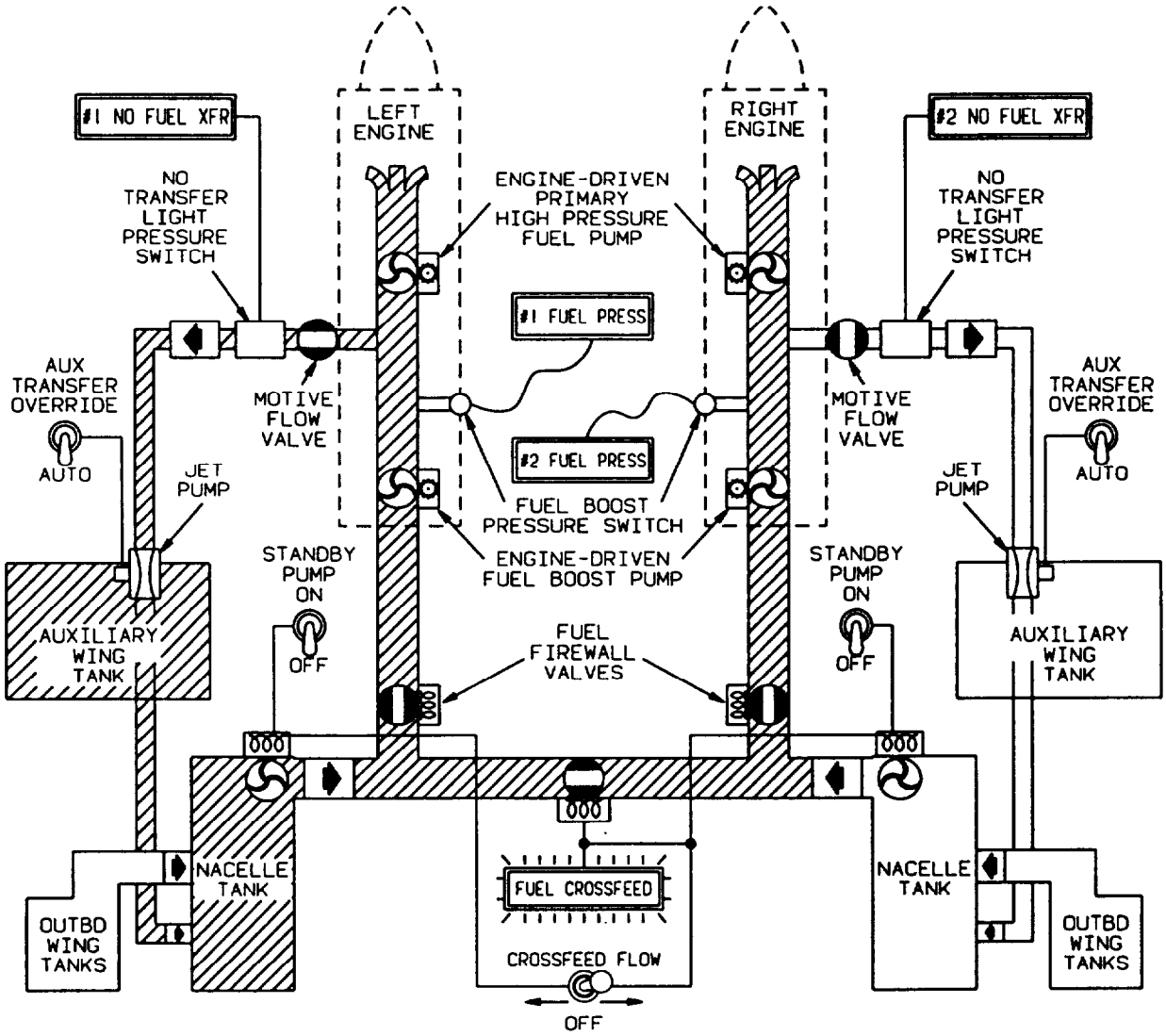

NOTE

BOTH STANDBY PUMP SWITCHES WILL BE OFF DURING CROSSFEED OPERATION.

NOTE

THE ENGINE-DRIVEN PRIMARY (HIGH PRESSURE) FUEL PUMP IS LIMITED TO 10 HOURS OF OPERATION THROUGHOUT ITS TBO PERIOD WITHOUT STANDBY FUEL PUMP OR ENGINE-DRIVEN BOOST PUMP FUEL PRESSURE.

NOTE

DIAGRAM SHOWS TYPICAL FUEL CROSSFEED SITUATION WITH LEFT WING FUEL SYSTEM SUPPLYING BOTH ENGINES (ALL BOOST AND STANDBY PUMPS OPERABLE). FOR SELECTION OF RIGHT WING FUEL FOR CROSSFEED REVERSE CROSSFEED SWITCH POSITION. EITHER CONFIGURATION WILL SUPPLY EITHER ENGINE DURING SINGLE-ENGINE OPERATION. FUEL WILL NOT CROSS TRANSFER BETWEEN TANK SYSTEMS.

PRESSURIZED FUEL FLOW FROM LEFT WING TANKS

APO1523I C

Figure 2-19. Crossfeed Fuel Flow

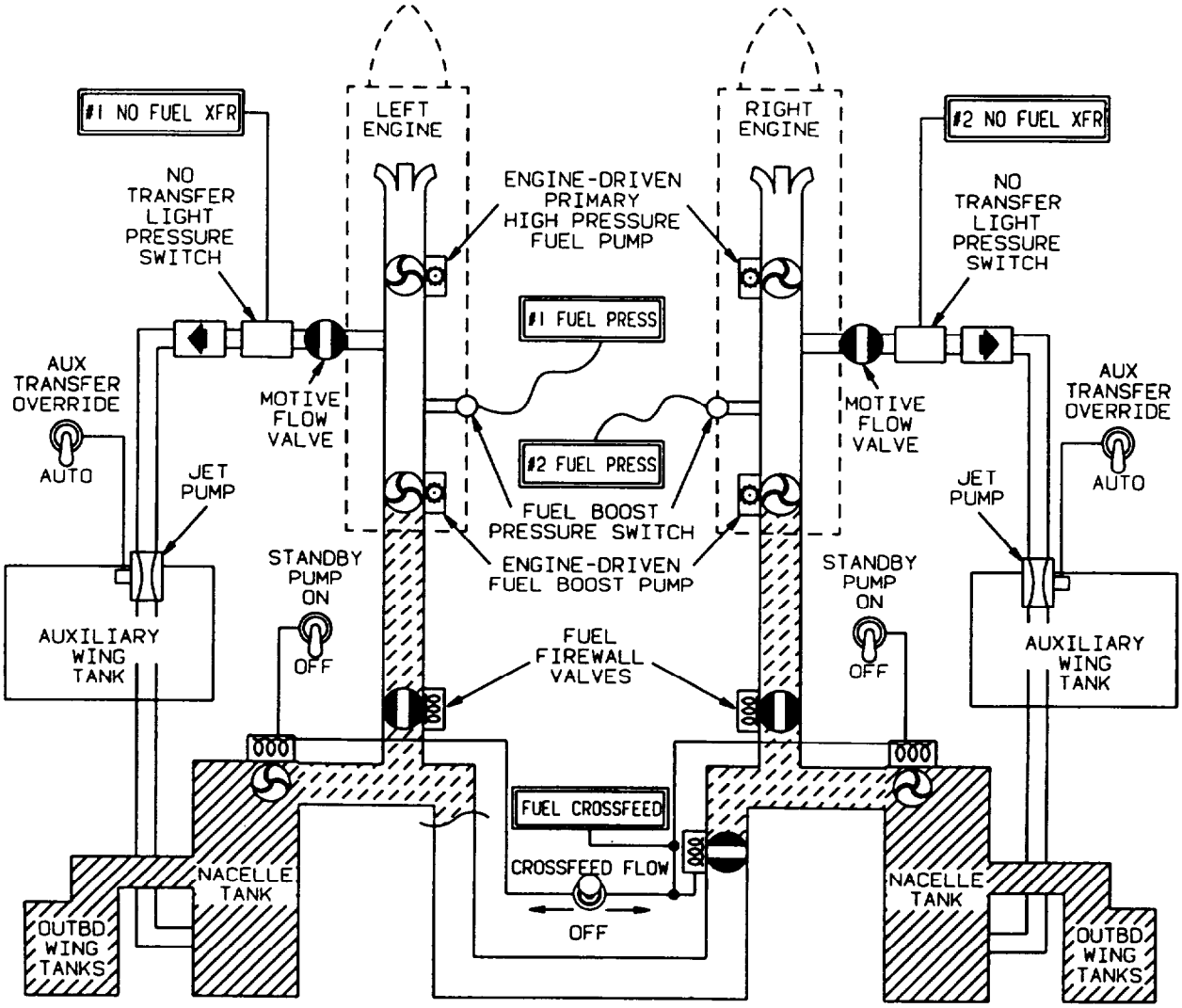

NOTE

IF AN ENGINE DRIVEN BOOST PUMP FAILS PRESSURE CAN BE MAINTAINED BY PLACING THE RESPECTIVE STANDBY PUMP SWITCH TO ON.

NOTE

THE ENGINE-DRIVEN PRIMARY (HIGH PRESSURE) FUEL PUMP IS LIMITED TO IO HOURS OF OPERATION, THROUGHOUT ITS TBO PERIOD, WITHOUT STANDBY FUEL PUMP OR ENGINE-DRIVEN BOOST PUMP FUEL PRESSURE.

NOTE

THE SYSTEM WILL SUCTION LIFT FUEL ONLY TO ITS RESPECTIVE ENGINE DRIVEN BOOST PUMP,I.E.. LEFT OR RIGHT. FUEL WILL NOT GRAVITY FEED THROUGH THE CROSSFEED SYSTEM.

APO15230 C

Figure 2-20. Gravity Feed Fuel Flow

b. Standby Fuel Pumps. A submerged, electrically-operated standby fuel pump, located within each nacelle tank, serves as a backup unit for the engine-driven boost pump. The standby pumps are switched off during normal system operations. A standby fuel pump will be operated during crossfeed operation to pump fuel from one nacelle tank to the opposite engine. Each standby fuel pump has an inertia switch included in the power supply circuit. When subjected to a 5 to 6 g shock loading, as in a crash situation, the inertia switch will remove electrical power from the standby fuel pumps. The standby fuel pumps are protected by two lo-ampere circuit breakers placarded **LEFT** or **RIGHT STANDBY PUMP,** located on the left sidewall circuit breaker panel (fig. 2-15), and four 5-ampere circuit breakers (two each in parallel) on the hot battery bus.

c. Fuel Transfer Pumps. The auxiliary tank fuel transfer system automatically transfers the fuel from the auxiliary tank to the nacelle tank without pilot action. Motive flow to a jet pump mounted in the auxiliary tank sump is obtained from the engine fuel plumbing system downstream from the engine driven boost pump and routed through the transfer control motive flow valve. The motive flow valve is energized to the open position, by the control system, to transfer auxiliary fuel to the nacelle tank to be consumed by the engine during the initial portion of the flight. When an engine is started, pressure at the engine driven boost pump closes a pressure switch, which, after a 30 to 50 second time delay to avoid depletion of fuel pressure during starting, energizes the motive flow valve. When auxiliary fuel is depleted, a low level float switch de-energizes the motive flow valve after a 30 to 60 second time delay. This time delay function prevents cycling of the motive flow valve due to sloshing fuel. If the motive flow valve or associated circuitry fails, the loss of motive flow pressure when there is still fuel remaining in the auxiliary fuel tank is sensed by a pressure switch which illuminates a yellow left or right indicator light on the fuel management panel, placarded **NO TRANSFER.** During engine start, the pilot should note that the **NO TRANSFER** indicator light extinguishes 30 to 50 seconds after engine start. The **NO TRANSFER** indicator light will not illuminate if auxiliary tanks are empty. A manual override is incorporated as a backup for the automatic transfer system. Manual override is initiated by placing the **AUX TRANSFER** switch, located on the fuel management panel, to the **OVERRIDE** position. This will energize the transfer control motive flow valve. The transfer systems are protected by two 5-ampere circuit breakers, placarded **LEFT** or **RIGHT AUX TRANSFER,** located on the left sidewall circuit breaker panel (fig. 2-15).

NOTE

In turbulence or during maneuvers, the **NO TRANSFER** indicator lights may momentarily illuminate after the auxiliary fuel has completed transfer.

d. Fuel Gaging System. Fuel quantity is measured by a capacitance type fuel gaging system. Two fuel gages, one for the left and one for the right fuel system, read fuel quantity in pounds. A maximum of 3% error may be encountered in each system; however, the system is compensated for fuel density changes due to temperature excursions.

e. Fuel Management Pane/. The fuel management panel (fig. 2-17) is located on the left cockpit sidewall. It contains the fuel gages, standby fuel pump switches, crossfeed valve switch, fuel gaging system control switch, **NO TRANSFER** indicator lights, and aux transfer override switches.

(1) Fuel gaging system control switch. A switch on the fuel management panel (fig. 2-17) placarded **FUEL QUANTITY, MAIN - AUXILIARY,** controls the fuel gaging system. When the switch is in the MAIN position, the fuel gages read the total fuel quantity in the left and right main fuel systems. When the switch is in the **AUXILIARY** position, the fuel gages read the fuel quantity in the left and right auxiliary tanks only.

Table 2-2. Usable Fuel Quantity Data

	TANKS	NUMBER	GALLONS
LEFT ENGINE	Main Tanks	6	193
	Auxiliary Tank	1	79
RIGHT ENGINE	Main Tanks	6	193
	Auxiliary Tank	1	79
*TOTALS		14	544

*Unusable fuel quantity not included in totals.

BT00102

(2) Standby fuel pump switches. Two switches, placarded **STANDBY PUMP - ON,** located on the fuel management panel (fig. 2-17), individually control a submerged fuel pump located in the corresponding nacelle tank. During normal aircraft operation both switches should be off, so long as the engine-driven boost pumps are operative.

NOTE

Both **STANDBY PUMP** switches shall be off during crossfeed operation. The loss of fuel pressure due to failure of an engine-driven boost pump will illuminate the **MASTER WARNING** annunciators on the glareshield, and will illuminate the respective **L FUEL PRESS** or **R FUEL PRESS** annunciator on the warning annunciator panel. Turning **ON** the **STANDBY PUMP** will extinguish the **FUEL PRESS** annunciator. The **MASTER WARNING** annunciators must be manually reset.

(3) Auxiliary fuel transfer override switches. Two switches on the fuel management panel (fig. 2-17), placarded **AUX TRANSFER OVERRIDE - AUTO,** individually control operation of the fuel transfer pumps. During normal operation both switches are in AUTO, which allows the system to be automatically actuated. If either transfer system fails to operate, the fault condition is indicated by the **MASTER CAUTION** annunciators on the glareshield and a steadily illuminated yellow left or right **NO TRANSFER** indicator light on the fuel management panel.

(4) Fuel crossfeed switch. The fuel crossfeed valve is controlled by a 3-position switch placarded **CROSSFEED FLOW - OFF,** located on the fuel management panel (fig. 2-17). Under normal flight conditions the switch is left in the **OFF** position. During emergency-single engine operation, it may become necessary to supply fuel to the operative engine from the fuel system on the opposite side. The crossfeed system is placarded for fuel system selection with a simplified diagram on the overhead fuel control panel. Place the **STANDBY PUMP** switches in the off position when crossfeeding. A lever lock switch, placarded **CROSSFEED FLOW,** is moved from the center OFF position to the left or to the right, depending on direction of fuel flow desired. This opens the crossfeed valve and energizes the standby pump on the side from which crossfeed is desired. During crossfeed operation with firewall fuel valve closed, auxiliary tank fuel will not crossfeed. When the crossfeed mode is energized, a green **FUEL CROSSFEED** annunciator on the caution/advisory panel will illuminate. Crossfeed system operation is described in Chapter 9. The crossfeed valve is protected by a 5-ampere circuit breaker, placarded **CROSSFEED,** located on the left sidewall circuit breaker panel (fig. 2-15).

f. Firewall Shutoff Valves.

CAUTION

Do not use the fuel firewall shutoff valve to shut down an engine, except in an emergency. The engine-driven high-pressure fuel pump obtains essential lubrication from fuel flow. When an engine is operating, this pump may be severely damaged (while cavitating) if the firewall valve is closed before the **CONDITION** lever is moved to the **FUEL CUTOFF** position.

The fuel system incorporates a fuel line shutoff valve mounted aft of each engine firewall. The firewall shutoff valves are controlled by two guarded switches placarded **LEFT** and **RIGHT FIREWALL SHUTOFF VALVE, OPEN - CLOSED,** located on the left sidewall circuit breaker panel. The firewall shutoff valves receive electrical power from the main buses, and also from the hot battery bus which is connected directly to the battery. The valves are protected by 5-ampere circuit breakers, placarded **LEFT** or **RIGHT FIREWALL VALVE,** on the left sidewall circuit breaker panel (fig. 2-15).

g. Fuel Tank Sump Drains. A sump drain wrench is provided in the aircraft loose tools to simplify draining a small amount of fuel from the sump drain.

(7) There are five sump drains and one filter drain in each wing (table 2-3).

(2) An additional drain for the extended range fuel system line extends through the bottom of the wing center section adjacent to the fuselage. Any time the extended range system is in use, the preflight inspection includes draining a small amount of fuel from this drain to check for fuel contamination. Whenever the extended range system is removed from the aircraft and the fuel line is capped off in the fuselage, the remaining fuel in the line shall be drained.

h. Fuel Purge System. Each engine is provided with a fuel purge system. The system is designed to ensure that any residual fuel in the fuel manifolds is consumed during engine shutdown. During engine operation, compressor discharge air is routed through a filter and check valve, pressurizing a small air tank mounted on the engine truss. On engine shutdown the pressure differential between the air tank and fuel manifolds causes air to be discharged from the air tank, through a check valve, and into manifolds, out through the nozzles and into the combustion chamber. The fuel forced into the combustion

chamber is consumed, causing a momentary rise in engine ITT.

i. Fuel Vent System. Each fuel system is vented through two ram vents located in the underside of the wing adjacent to the nacelle, and a secondary vent, located near the wing tip. To prevent icing of the vent system, one vent is recessed into the wing and the other ram vent protrudes out from the wing and contains a heating element. The vent line at the nacelle contains an inline flame arrester.

j. Engine Oil-to-Fuel Heat Exchanger. An engine oil-to-fuel heat exchanger, one located on each engine accessory case, operates continuously during engine operation to heat fuel delivered to the engine to prevent the freezing of water which the fuel may contain.

2-31. FUEL SYSTEM MANAGEMENT.

a. Fuel Transfer System. When the auxiliary tanks are filled, they will be used first. During transfer of auxiliary fuel, which is automatically controlled, the nacelle tanks are maintained full. A check valve in the gravity feed line from the outboard wing prevents reverse fuel flow. Normal gravity transfer of the main wing fuel into the nacelle tanks will begin when auxiliary fuel is exhausted. The system will gravity feed fuel only to its respective nacelle tank, i.e. left or right (fig. 2-20). Fuel will not gravity feed through the crossfeed system.

b. Operation With Failed Engine-Driven Boost Pump and Standby Pump. Two boost pumps in each fuel system provide inlet head pressure to the engine-driven primary high-pressure fuel pump. If crossfeed is used, a third pump (the standby fuel pump from the opposite system) will supply the required pressure. Operation under this condition will result in an unbalanced fuel load, as fuel from one system will be supplied to both engines while all fuel from the system with the failed boost pumps will remain unused.

2-32. FERRY FUEL SYSTEM.

Plumbing is installed for connection to long range fuel cells which may be installed in the cabin area.

Table 2-3. Fuel Sump Drain Locations

NUMBERS	DRAINS	LOCATION
1	Leading Edge Tank	Outboard of nacelle, underside of wing
2	Integral Tank	Underside of wing, forward of aileron
3	Firewall Fuel Filter	Underside of cowling forward of firewall
4	Sump Strainer	Bottom center of nacelle forward of wheel well
5	Gravity Feed Line	Aft of wheel well
6	Auxiliary Tank	At wing root, just forward of flap
7	Extended Range	Outboard of fuselage on underside of wing center section

BT00195

Section V. FLIGHT CONTROLS

2-33. FLIGHT CONTROL SYSTEM.

The aircraft's primary flight control system consists of conventional rudder, elevator, and aileron control surfaces. These surfaces are manually operated from the cockpit through mechanical linkage using a control wheel for the ailerons and elevators, and adjustable rudder/brake pedals for the rudder. Both the pilot and copilot have flight controls. Trim control for the rudder, elevators, and ailerons is accomplished through a manually actuated cable-drum system for each set of control surfaces. The autopilot has provisions for controlling the position of the ailerons, elevators, elevator trim tab, and rudder.

2-34. CONTROL WHEELS.

Elevator and aileron control surfaces are operated by manually actuating either the pilot's or copilot's control wheel (fig. 2-21). A control wheel is installed on each side of the instrument panel. Switches are installed in the outboard grip of each wheel to operate the elevator trim tabs. A microphone switch; an autopilot/yaw damp/electric trim disconnect switch; and a pitch synchronize and control wheel steering switch are also installed in the outboard grip of each control wheel. The outboard grip of the copilot's control wheel also has a go around **(GA)** switch. A transponder ident switch is installed on the forward side of the

inboard grip of each control wheel. Installed in the center of each control wheel is a digital electric clock. A map light switch is installed on the inboard grip of each control wheel.

2-35. RUDDER SYSTEM.

a. Rudder Pedals. Aircraft rudder control and nose wheel steering is accomplished by actuation of the rudder pedals from either the pilot's or copilot's station. The rudder pedals may be individually adjusted, forward or aft, to provide adequate leg room for the pilot and copilot. Adjustment is accomplished by depressing the lever alongside the rudder pedal arm and moving the pedal, forward or aft, until the locking pin engages in the selected position.

b. Yaw Damper System. A yaw damper system is provided to aid the pilot in maintaining directional stability and increase ride comfort. The system may be used at any altitude, but is required for flight above 17,000 feet. It must be deactivated for takeoff and landing. The yaw damper system is a part of the autopilot. The system is controlled by a yaw damp **(YD)** switch located on the autopilot control panel. The yaw damper may also be disconnected by depressing the control wheel autopilot/yaw damper/electric trim disconnect switch (placarded **AP DISC & TRIM INTRPT)** to the first level. Operating instructions for this system are contained in Chapter 3.

c. Rudder Boost System. Rudder boost is provided to aid the pilot in maintaining directional stability resulting from an engine failure or a large variation of power between the engines. Incorporated in the rudder cable system are two pneumatic rudder boosting servos that actuate the cables to provide rudder pressure to help compensate for asymmetrical thrust. Rudder boost is not required for flight.

NOTE

Rudder boost may be inoperative when brake deice is on.

(1) During operation, a differential pressure valve accepts bleed air pressure from each engine. When the pressure varies between the bleed air systems, the shuttle in the differential pressure valve moves toward the low pressure side. As the pressure difference reaches a preset tolerance, a switch closes on the low pressure side which activates the rudder boost system. This system is designed only to help compensate for asymmetrical thrust. Appropriate trimming is to be accomplished by the pilot. Moving either or both of the **BLEED AIR VALVES** switches on the copilot's subpanel to the **INSTR & ENVIR OFF** position will disengage the rudder boost system.

NOTE

Condition levers must be in **LOW IDLE** position to perform rudder boost check.

(2) The system is controlled by a switch placarded **RUDDER BOOST - OFF,** located on the pedestal extension, and is to be turned on before flight. A preflight check of the system can be performed during the runup by retarding the power on one engine to idle and advancing power on the opposite engine until the power difference between the engines is great enough to activate the switch to turn on the rudder boost system. Movement of the appropriate rudder pedal (left engine idling, right rudder pedal moves forward) will be noted when the switch closes, indicating that the system is functioning properly for low engine power on that side. Repeat the check with opposite power settings to check for movement of the opposite rudder pedal. The system is protected by a 5-ampere circuit breaker, placarded RUDDER BOOST, located on the right sidewall circuit breaker panel (fig. 2-7).

2-36. FLIGHT CONTROL LOCKS.

CAUTION

Remove control locks before towing the aircraft or starting engines. Serious damage could result in the steering linkage if towed by a tug with the rudder lock installed.

Positive locking of the rudder, elevator and aileron control surfaces, and engine controls **(POWER** levers, **PROP** levers, and **CONDITION** levers) is provided by a removable lock assembly (fig. 2-22) consisting of two pins, and an elongated U-shaped strap interconnected by a chain. Installation of the control locks is accomplished by inserting the U-shaped strap around the aligned control levers from the copilot's side; then the aileron/elevator locking pin is inserted through a guide hole in the top of the pilot's control column assembly. The rudder is held in a neutral position by an L-shaped pin which is installed through a guide hole in the floor aft of the pilot's rudder pedals. The rudder pedals must be centered to align the hole in the rudder bellcrank with the guide hole in the floor. Remove the locks in reverse order (rudder pin, control column pin, and power control clamp).

2-37. TRIM TABS.

Trim tabs are provided for all flight control surfaces. These tabs are manually actuated, and mechanically controlled by a cable-drum and jack-screw actuator system (except the right aileron tab, which is of the fixed, bendable type). Elevator and aileron trim tabs incorporate neutral, non-servo action, i.e., as the elevators or ailerons are

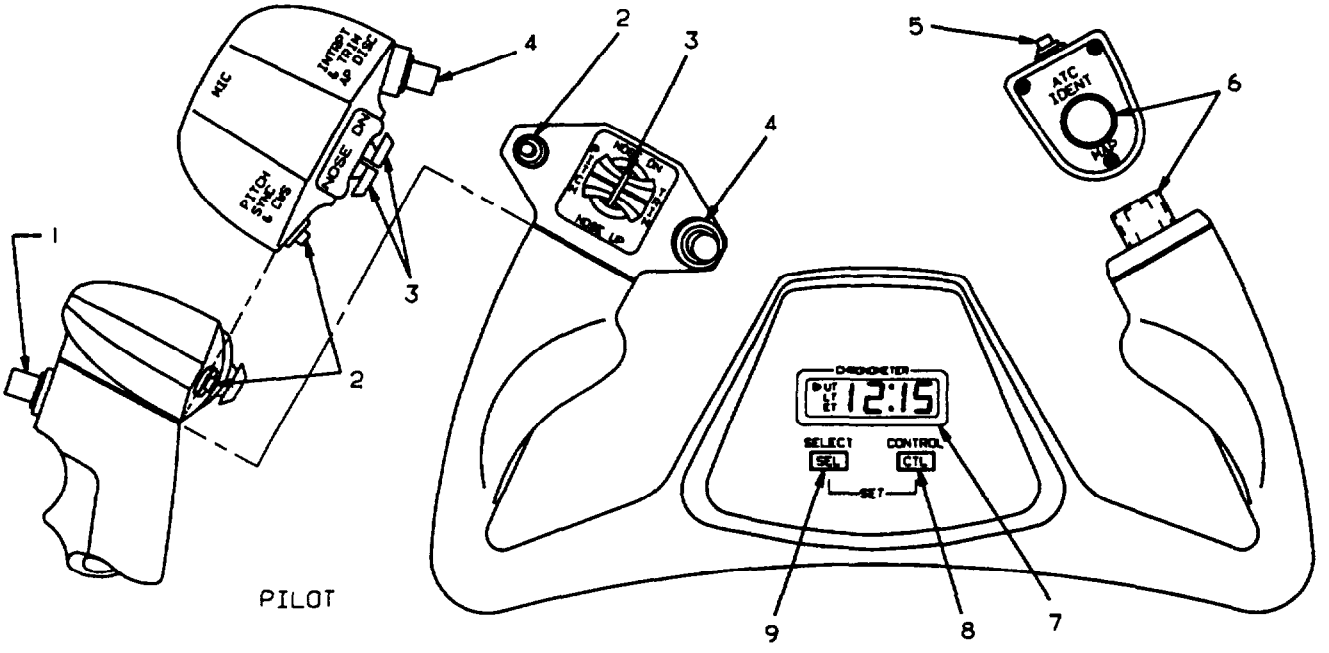

1. Microphone Switch
2. Pitch Synchronize and Control Wheel Steering Switch
3. Electric Elevator Trim Switches
4. Autopilot/Yaw Damper/Electric Trim Disconnect Switch
5. Transponder Ident Switch
6. Map Light Switch
7. Chronometer Digital Display
8. Chronometer Control Pushbutton Switch
9. Chronometer Mode Select Pushbutton Switch
10. Go-Around Switch

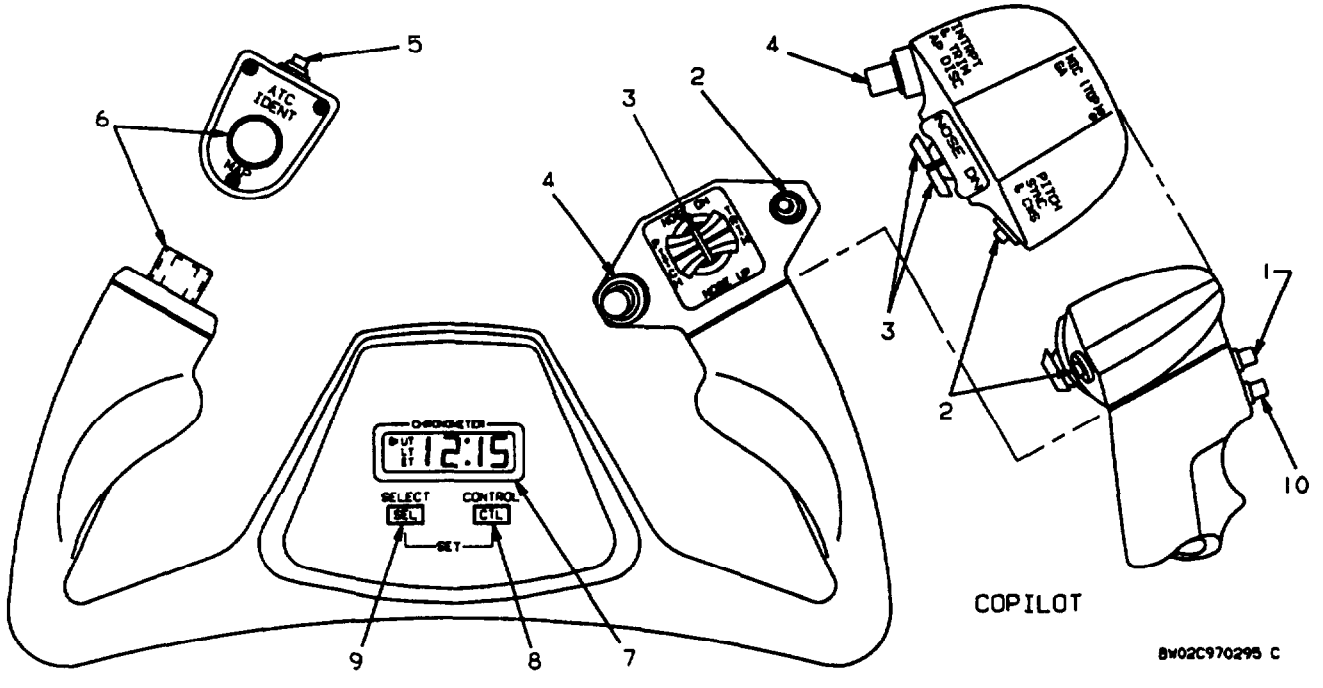

Figure 2-21. Control Wheels

displaced from the neutral position, the trim tab maintains an as-adjusted position. The rudder trim tab incorporates anti-servo action, i.e., as the rudder is displaced from the neutral position the trim tab moves in the same direction as the control surface. This action increases control pressure as the rudder is deflected from the neutral position.

a. Elevator Trim Tab Control. The elevator trim tab control wheel, placarded **PITCH TRIM, DN - UP,** is located on the left side of the control pedestal (fig. 2-12) and controls a trim tab on each elevator. The amount of elevator tab deflection, in units from a neutral setting, is indicated by a position arrow.

b. Electric Elevator Trim. The electric elevator trim system is controlled by dual element thumb switches on the control wheels (fig. 2-21), and a trim disconnect switch on each control wheel. The system is protected by two lo-ampere circuit breakers placarded **NO 1** and **NO 2 AP TRIM POWER,** located on the right sidewall circuit breaker panel (fig. 2-7). The dual element thumb switch is moved forward for trimming nose down and aft for nose up. When released, the switch returns to the center (off) position. Any activation of the trim system through the copilot's trim switch can be over-ridden by activation of the pilot's switch. Simultaneously operating the pilot's and copilot's switches in opposing directions results in the pilot having priority. An annunciator placarded **ELEC TRIM OFF** on the caution/advisory annunciator panel indicates failure or disconnect of the electric trim system.

A preflight check of the switches should be accomplished before flight by moving the switches individually on both control wheels. No one switch alone should operate the system; operation of elevator trim should occur only by movement of pairs of switches on each control wheel. The trim system disconnect is a bi-level pushbutton momentary-type switch, located on the outboard grip of each control wheel, placarded **AP DISC & TRIM INTRPT.** Depressing the switch to the first of two levels disconnects the autopilot and yaw damp system, and the second level disconnects the electric trim system.

c. Aileron Trim Tab Control. The aileron trim tab control, placarded **AILERON TRIM - LEFT, RIGHT,** located on the control pedestal (fig. 2-12), adjusts the aileron trim tab. The amount of aileron tab deflection from a neutral setting, as indicated by a position indicator, is relative only and is not in degrees.

d. Rudder Trim Tab Control. The rudder trim tab control knob, placarded **RUDDER TAB - LEFT, RIGHT,** located on the control pedestal (fig. 2-12), controls adjustment of the rudder trim tab. The amount of rudder tab

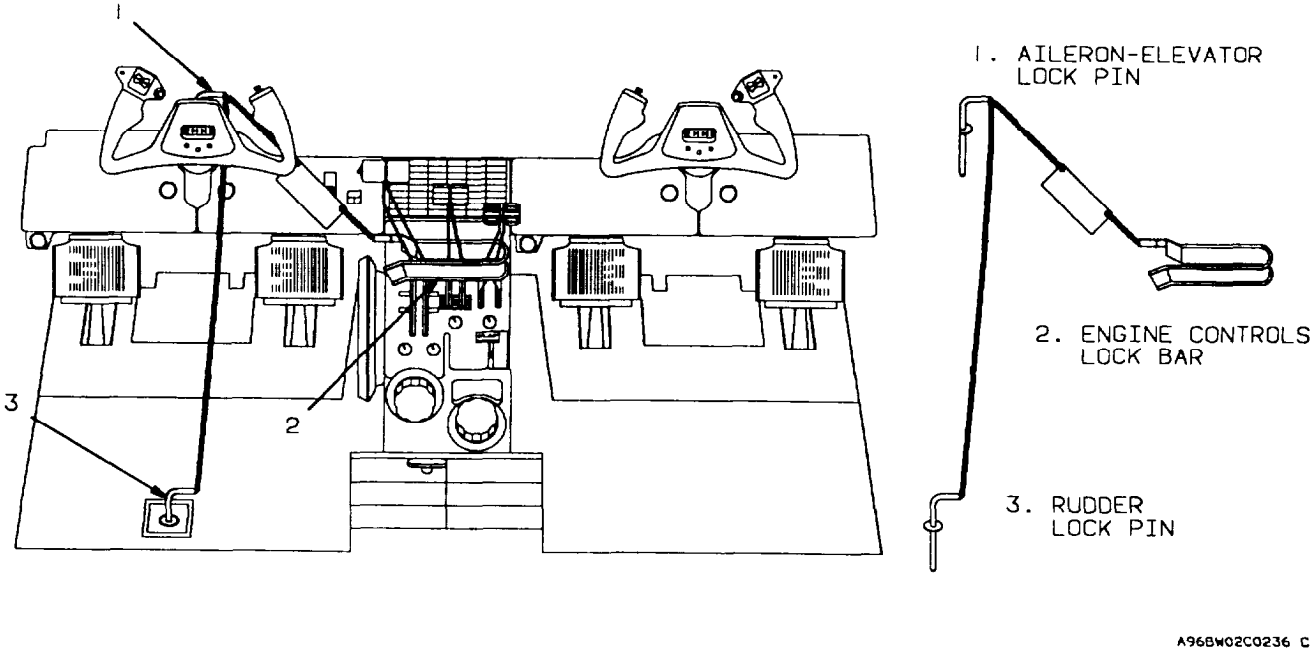

Figure 2-22. Control Locks

deflection, in units from a neutral setting, is indicated by a position indicator.

2-38. WING FLAPS.

The slot-type wing flaps are electrically operated and consist of two sections for each wing. These sections extend from the inboard end of each aileron to the junction of the wing and fuselage. During extension or retraction, the flaps are operated as a single unit, with each section actuated by a separate jackscrew actuator. The actuators are driven through flexible shafts by a single reversible electric motor. Wing flap position is indicated in percent of travel by a flap position indicator on the center subpanel. Full flap extension and retraction time is approximately 11 seconds. The flap control switch is located on the control pedestal. No emergency wing flap actuation system is provided. With flaps extended beyond the **APPROACH** position, the landing gear warning horn will sound, unless the landing gear is down and locked. The flap motor circuit is protected by a 20-ampere circuit breaker, placarded **FLAP MOTOR,** located on the left sidewall circuit breaker panel (fig. 2-15). The flap system control circuit is protected by a 5-ampere circuit breaker, placarded **FLAP CONTROL,** located on the left sidewall circuit breaker panel (fig. 2-15).

a. Wing Flap Control Switch. Flap operation is controlled by a three-position switch with a flap-shaped handle on the control pedestal (fig. 2-12). The handle of this switch is placarded **FLAP.** Switch positions are placarded **FLAP - UP, APPROACH** and **DOWN.** The amount of extension of the flaps is established by the position of the flap switch as follows: **UP** - 0%, **APPROACH** - 40%, and **DOWN** - 100%. Limit switches, mounted on the right inboard flap, establish the flap travel. Intermediate flap positions between **UP** and **APPROACH** cannot be selected. To return the flaps to full **UP,** place the flap switch to the **UP** detent position. To return the flaps to **APPROACH,** move the flap switch to the **UP** position and then to the **APPROACH** detent position. In the event that any two adjacent flap sections extend 3 to 5 degrees out of phase with the other, a safety mechanism is provided to discontinue power to the flap motor.

b. Wing Flap Position Indicator. Flap position in percent of travel from 0 percent (UP) to 100 percent **(DOWN)** is shown on an indicator, placarded **FLAPS,** located on the center subpanel (fig. 2-6). The approach and full down flap positions are 14 and 3.5 degrees, respectively. The flap position indicator is protected by a S-ampere circuit breaker, placarded **FLAP CONTROL,** located on the left sidewall circuit breaker panel (fig. 2-15).

Section VI. PROPELLERS

2-39. DESCRIPTION.

A four-blade aluminum propeller is installed on each engine. The propeller is full feathering, constant speed, variable-pitch, counterweighted, and reversible; and is controlled by engine oil pressure through single action, engine driven propeller governors. The propeller is flange mounted to the engine shaft. Centrifugal counterweights, assisted by a feathering spring, move the blades toward the low RPM (high pitch) position and into the feathered position. Governor boosted engine oil pressure moves the propeller to the high RPM (low pitch) hydraulic stop and reverse position. The propellet has no low RPM (high pitch) stops; this allows the blades to feather after engine shutdown. Low pitch propeller position is determined by the low pitch stop, which is a mechanically actuated, hydraulic stop. Ground fine and reverse blade angles are controlled by the **POWER** levers in the ground fine and reverse range.

2-40. FEATHERING PROVISIONS.

Both manual and automatic propeller feathering systems are provided. Manual feathering is accomplished by pulling the corresponding **PROP** lever aft, past a friction detent. To unfeather, the **PROP** lever is pushed forward into the governing range. The automatic feathering system senses loss of torque and feathers an unpowered propeller. Feathering springs feather the propeller when it is not turning.

a. Automatic Feathering. The automatic feathering system provides a means of immediately dumping oil from the propeller servo to enable the feathering spring and counterweights to start feathering the blades in the event of an engine failure. Although the system is armed by a switch on the pilot's subpanel (fig. 2-6), placarded **AUTOFEATHER ARM - OFF - TEST,** the completion of the arming phase occurs when both **POWER** levers are advanced above 89% N_1, at which time both annunciators on the caution/advisory annunciator panel indicate a fully armed system. The green annunciators are placarded **L AUTOFEATHER** (left engine) and **R AUTOFEATHER** (right engine). The system will remain inoperative as long as either **POWER** lever is retarded below approximately the 89% N_1, position, unless **TEST** position of the autofeather switch is selected to disable the **POWER** lever limit switches. The system is designed for use only during takeoff or landing, and should be turned off when establishing cruise climb. During takeoff or landing, should the

torque for either engine drop to an indication between 19 - 13%, the autofeather system for the opposite engine will be disarmed. Disarming is confirmed when the **AUTOFEATHER** annunciator of the opposite engine becomes extinguished. If torque drops further, to a reading between 13 and 7%, oil is dumped from the servo of the affected propeller, allowing a feathering spring to move the blades into the feathered position. Feathering also causes the **AUTOFEATHER** annunciator of the feathered propeller to extinguish. At this time, both the **L AUTOFEATHER** and **R AUTOFEATHER** annunciators are extinguished, the propeller of the defective engine has feathered, and the propeller of the operative engine has been disarmed from autofeathering capability. Only manual feathering control remains for the second propeller.

b. Propeller Autofeather Arm/Off/Test Switch. A switch placarded **AUTOFEATHER ARM - OFF - TEST,** located on the pilot's subpanel (fig. 2-6), is provided for arming and disarming the system and for selection of the **TEST** function. The **TEST** position of the switch checks the readiness of the autofeather system below 89% N_1.

c. Autofeather Annunciators. Autofeather annunciators consist of two green annunciators on the caution/advisory annunciator panel, placarded L **AUTOFEATHER** and **R AUTOFEATHER.** When illuminated, the annunciators indicate that the autofeather system is armed. Both annunciators will be extinguished if either propeller has been feathered or if the system is disarmed by retarding a **POWER** lever. Autofeather circuits are protected by a 5-ampere circuit breaker, placarded **AUTO FEATHER,** located on the right sidewall circuit breaker panel (fig. 2-7).

2-41. PROPELLER GOVERNORS.

A constant speed governor and an overspeed governor control propeller RPM. The constant speed governor, mounted on top of the reduction housing, controls the propeller through its entire range. The propeller control lever controls the propeller by means of this governor. If the constant speed governor should malfunction and request more than 2000 RPM, the overspeed governor cuts in at 2080 RPM and dumps oil from the propeller to keep the RPM from exceeding approximately 2120 RPM. A solenoid, actuated by the **PROP GOV TEST** switch, located on the pilot's subpanel (fig. 2-6), is provided for resetting the overspeed governor to approximately 1830 to 1910 RPM for test purposes. If the propeller sticks or moves too slowly during a transient condition, causing the propeller governor to act too slowly to prevent an overspeed condition, the power turbine governor, contained within the constant speed governor housing, acts as a fuel topping governor. When the propeller reaches 106% of selected N_2 RPM, the power turbine governor limits the fuel flow to the gas generator, reducing N_1 RPM, which in turn prevents the propeller from exceeding approximately 2120 RPM. During operation in the reverse range, the power turbine governor is reset to approximately 95% of propeller RPM before the propeller reaches a negative pitch angle. This ensures that engine power is limited, allowing a propeller RPM of somewhat less than that of the constant speed governor setting to be maintained. The constant speed governor, therefore, will always sense an underspeed condition and direct oil pressure to the propeller servo piston to permit propeller operation in beta and reverse ranges.

2-42. LOW PITCH STOP.

Low pitch propeller position is determined by a mechanically-monitored hydraulic low pitch stop. The propeller servo piston is connected by four spring-loaded sliding rods to the beta collar, mounted behind the propeller. A carbon brush block riding in the beta collar transfers the movement of the collar through the propeller reversing lever to the beta valve of the governor. The initial forward motion of the beta valve from its rigged position blocks off the flow of oil to the propeller. Further motion dumps the oil from the propeller into the reduction gear box sump. A mechanical stop limits the forward motion of the beta valve. Rearward movement of the beta valve from its rigged position does not affect normal propeller control. When the propeller is rotating at a speed lower than that selected on the governor, the governor pump provides oil pressure to the servo piston, decreasing pitch of the propeller blades until the feedback of motion from the beta collar pulls the beta valve into a position blocking the supply of oil to the propeller, thus preventing further pitch changes.

2-43. GROUND FINE.

Lifting the **POWER** levers and moving them aft past the flight idle stop will place the **POWER** levers into the ground fine position. Approximately half way back to the ground fine gate, a mechanical linkage at the propeller governor will begin to bleed P_y air from the fuel control unit, provided the **PROP** levers are positioned to the minimum RPM position. This results in a decrease in both engine N,, torque, and propeller RPM. With the **POWER** levers at the ground fine gate, engine N_1 should be within the range of 62% to 67%, and propeller RPM should not be less than 1000 RPM.

2-44. PROPELLER SYNCHROPHASER.

a. Description. The propeller synchrophaser matches left and right propeller RPM as well as propeller phase relationship. This phase relationship is designed to decrease cabin noise, and is not adjustable in flight. A toggle switch, placarded **PROP SYN - ON - OFF,** installed adjacent to the synchroscope on the pilot's instrument panel (fig. 2-16), turns the system on/off.

Signal pulses occurring once per revolution of the propeller are obtained from magnetic pickups (located in the front of the engine on the deice brush mounting bracket) when the target (mounted on the aft side of the spinner bulkhead) passes the magnetic pickup. The signal pulses are sent to a control box installed forward of the pedestal. The control box receives these signal pulses and compares them for pulse rate and relative position. Differences in pulse rate and/or propeller position cause the control box to vary the voltage in the primary governor coil, which in turn increases propeller speed until the correct speed and phasing are obtained.

A governor coil increases the speed set by the propeller control lever, but never decreases the speed set by the control lever. The maximum synchrophaser range is approximately 20 RPM. This limited range prevents either propeller from losing more than a limited RPM if the other propeller is feathered with the synchrophaser **ON.**

There is no master or slave engine in this system. There is a limited range for synchronizing, called the "holding range". There is a maximum RPM differential (capture range), at which the synchrophaser, when turned on, will begin to synchronize the propellers. For this reason the propellers should be manually synchronized before turning the synchrophaser on.

NOTE

If the synchrophaser is **ON** but does not adjust properly, the synchrophaser has reached the limit of its range. Turn the system **OFF,** manually adjust the propeller RPM into synchronization, then turn the synchrophaser **ON.**

The propeller synchrophaser may be used during takeoff at the pilot's option.

b. Synchrophaser Control Box. The control box, located forward of the pedestal, converts pulse rate differences into correction commands. Differences in pulse rate, and/or propeller position, cause the control box to vary the voltage in the primary governor coil, which in turn increases propeller speed until the correct speed and phasing are obtained. The system is protected by a S-ampere circuit breaker placarded **PROP SYNC,** located on the right sidewall circuit breaker panel (fig. 2-7).

c. Synchroscope. The propeller synchroscope, located on the pilot's instrument panel, provides an indication of synchronization of the propellers. If the right propeller is operating at a higher RPM than the left, a black and white cross pattern spins in a clockwise direction. Left, or counterclockwise, rotation indicates a higher RPM of the left propeller. This instrument aids the pilot in obtaining complete synchronization of the propellers.

2-45. PROPELLER LEVERS.

Two propeller levers on the control pedestal (fig. 2-12), placarded **PROP,** are used to regulate propeller speeds. Each lever controls a primary governor, which acts to regulate propeller speeds within the normal operational range. The full forward position of the levers is placarded **TAKE-OFF, LANDING, AND REVERSE - HIGH RPM.** The full aft position of the levers is placarded **FEATHER.** When a lever is placed at **HIGH RPM,** the propeller may attain a static RPM of 1700 depending upon **POWER** lever position. As a lever is moved aft, passing through the propeller governing range, but stopping at the feathering detent, the propeller RPM will correspondingly decrease to the lowest limit (approximately 1200 RPM). Moving a **PROP** lever aft past the detent into **FEATHER** will feather the propeller.

2-46. PROPELLER REVERSING.

CAUTION

Do not move the **POWER** levers below the flight idle gate unless the engine is running. Damage to the reverse linkage mechanisms will occur.

Propeller reversing on unimproved surfaces should be accomplished carefully to prevent propeller erosion from reversed airflow. Consideration should be given to not reversing propellers when operating in snow or dusty conditions, to prevent obscuring the pilot's vision.

The engine **POWER** levers actuate an engine mounted cambox which is connected to the engine fuel control unit (FCU) and the propeller reversing cable. The cambox is arranged so that the reversing cable is not affected by **POWER** lever movement forward of the idle stop. When the **POWER** levers are lifted over the reversing detent and moved rearward, the reversing cable is pulled aft. This action resets the beta valve rearward, allowing the governor to pump more oil into the propeller, thus moving the blades through the ground fine range toward reverse pitch. As the blades move, the mechanical feedback collar is moved forward. This movement is transmitted by a carbon block on the end of the reversing lever to the beta valve, causing it to move forward. As the **POWER** levers are moved further rearward (into the striped area), the propeller blades are moved further toward the reverse pitch stop, and the FCU is reset to increase engine speed.

2-47. PROPELLER TACHOMETERS.

Two tachometers on the instrument panel (fig. 2-16) register propeller speed in hundreds of RPM. Each indicator is slaved to a tachometer-generator unit attached to the corresponding engine, installed on the reduction gearbox.

Section VII. UTILITY SYSTEMS

2-48. DEFROSTING SYSTEM.

a. Description. The defrosting system is an integral part of the heating and ventilation system. The system consists of two warm air outlets connected by ducts to the heating system. One outlet is just below the pilot's windshield and the other is just below the copilot's windshield. A push-pull control placarded **DEFROST AIR,** on the pilot's subpanel, manually controls airflow to the windshield. When the control is pulled out, defrosting air is ducted to the windshield. As the control is pushed in, there is a corresponding decrease in airflow.

b. Automatic Operation,

1. **VENT BLOWER** switches - As required.
2. **CABIN TEMP MODE** switch - AUTO.
3. **CABIN TEMP rheostat** - As required.
4. **CABIN AIR, COPILOT AIR, PILOT AIR,** and **DEFROST AIR** controls - As required.

c. Manual Operation. If the automatic temperature control should fail to operate, the temperature of defrost air and cabin air can be controlled manually by setting the **CABIN TEMP MODE** switch to the **MAN HEAT** position, then using the **MANUAL TEMP** switch to set the desired temperature. This control is located on the copilot's subpanel (fig. 2-6). Use the following procedure for manual operation:

1. **PILOT** and **COPILOT AIR** controls - In.
2. **CABIN AIR** and **DEFROST AIR** controls - out
3. **CABIN TEMP MODE** switch - **MAN HEAT.**
4. Cold air outlets - As required.
5. **MANUAL TEMP** switch - As required.

2-49. SURFACE DEICING SYSTEM.

a. Description. Ice accumulation is removed from each inboard and outboard wing leading edge and both horizontal stabilizers by the flexing of deice boots which are pneumatically actuated. Bleed air is used to supply air pressure to inflate the deice boots, and to supply vacuum through the ejector system. A pressure regulator protects the system from over inflation. When the system is not in operation, a distributor valve keeps the boots held down by vacuum supplied through the ejector system.

CAUTION

Operation of the surface deice system in ambient temperatures below -40°C can cause permanent damage to the deice boots.

NOTE

Under conditions where one bleed air source is inoperative, sufficient bleed air pressure for deice boot inflation may not be available. Prior to deice boot inflation, check the regulated bleed air pressure gage for a minimum of 16 PSI. If insufficient pressure exists, increasing engine N_1 and/or decreasing aircraft altitude will increase bleed air pressure.

b. Operation.

(1) Deice boots are intended to remove ice after it has formed rather than prevent ice formation. For the most effective deicing operation, allow at least 1/2 inch of ice to form on the boots before attempting ice removal. Very thin ice may crack and cling to the boots instead of shedding.

WARNING

Never cycle the system rapidly. This may cause the ice to accumulate outside the contour of the inflated boots and prevent ice removal.

(2) A two position deice switch, placarded **DEICE CYCLE** and located on the pilot's subpanel (fig. 2-6), controls the deicing operation. The switch is spring loaded to return to the off position from **SINGLE** or **MANUAL.** When the **SINGLE** position is selected, the distributor valve opens to inflate the wing boots. After an inflation period of approximately 6 seconds, an electronic timer switches the distributor to deflate the wing boots and a 4 second inflation begins in the horizontal stabilizer, stabilon, and taillet boots. When these hoots have inflated and deflated, the cycle is complete.

(3) If the switch is held in the **MANUAL** position, the boots will inflate simultaneously and remain inflated until the switch is released. The switch will return to the **OFF** position when released. After the cycle, the boots will remain in the vacuum hold down condition until again actuated by the switch.

(4) Either engine is capable of providing sufficient bleed air for all requirements of the surface deice

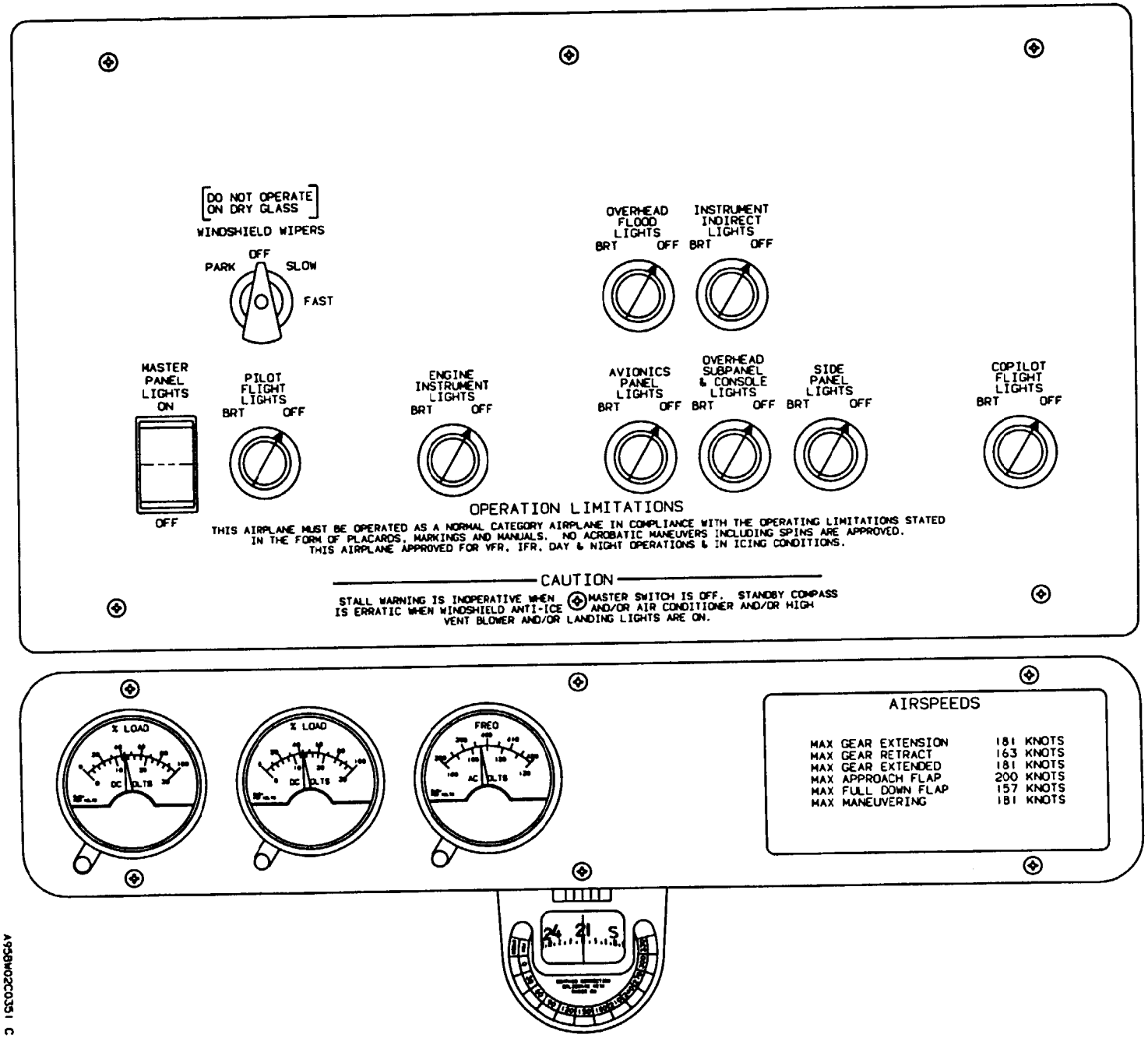

Figure 2-23. Overhead Control Panel

system. Check valves in the bleed air and vacuum lines prevent backflow through the system during single engine operation. Regulated pressure is indicated on a gage, placarded **PNEUMATIC PRESSURE,** located on the copilot's subpanel (fig. 2-6).

2-50. PROPELLER ELECTRIC DEICE SYSTEM.

a. Description. The propeller electric deice system includes electrically heated deice boots, slip rings and brush block assemblies, a timer for automatic operation, ammeter, circuit breakers for left and right propeller and control circuit protection, and two switches located on the pilot's subpanel (fig. 2-6), for automatic or manual control of the system.

b. Automatic Operation. The two position switch located on the pilot's subpanel, placarded **PROP AUTO - OFF,** is provided to activate the automatic system. When the switch is placed to the **AUTO** position, the timer diverts power through the brush block and slip ring to all heating elements on one propeller. Subsequently, the timer then diverts power to all heating elements on the other propeller for the same length of time. This cycle will continue as long as the switch is in the **AUTO** position. The system utilizes a metal foil type single heating element, energized by DC voltage. The timer switches every 90 seconds, resulting in a complete cycle in approximately 3 minutes.

c. Manual Operation. The manual propeller deice system is provided as a backup to the automatic system. The spring-loaded control switch located on the pilot's subpanel, placarded **PROP - MANUAL - OFF,** controls the manual override relay. When the switch is held in the **MANUAL** position, the automatic timer is overridden, and power is supplied to the heating elements of both propellers simultaneously. The switch is of the momentary type and must be held in position for approximately 90 seconds to dislodge ice from the propeller surface. Repeat this procedure as required to avoid significant buildup of ice, which will result in a loss of performance, vibration, and impingement of ice upon the fuselage. The propeller deice ammeter will not indicate a load while the propeller deice system is being utilized in the manual mode. However, each aircraft loadmeter will indicate an approximate 10% increase in load while the manual propeller deice system is operating.

2-51. PITOT HEAT SYSTEM.

CAUTION

Pitot heat should not be used for more than 15 minutes while the aircraft is on the ground. Overheating may damage the heating elements.

Heating elements are installed in both pitot masts, located on the nose. Each heating element is controlled by an individual 7 1/2-ampere circuit breaker switch placarded **PITOT, LEFT** and **RIGHT,** located on the pilot's subpanel (fig. 2-6).

2-52. STALL WARNING HEAT SYSTEM.

CAUTION

Heating elements protect the stall warning lift transducer vane and face plate from ice. However, a buildup of ice on the wing may change or disrupt the airflow and prevent the system from accurately indicating an imminent stall.

The lift transducer is equipped with anti-icing capability on both the mounting plate and the vane. Stall warning vane heat is controlled by and the circuit is protected by a 15-ampere circuit breaker switch located on the pilot's subpanel (fig. 2-6), placarded **STALL WARN.** The level of heat is minimal for ground operation, but is automatically increased for flight operation through the landing gear safety switch.

2-53. STALL WARNING SYSTEM.

The stall warning system consists of a transducer, a lift computer, warning horn, and a test switch. Angle of attack is sensed by aerodynamic pressure on the lift transducer vane located on the left wing leading edge. When a stall is imminent, the output of the transducer activates a stall warning horn. The system has preflight test capability through the use of a switch placarded **STALL WARN TEST** located on the copilot's subpanel (fig. 2-6). Holding this switch in the **STALL WARN TEST** position actuates the warning horn by moving the transducer vane. The circuit is protected by a 5-ampere circuit breaker, placarded **STALL WARN,** located on the right sidewall circuit breaker panel (fig. 2-7).

2-54. BRAKE DEICE SYSTEM.

a. Description. The brake deice system may be used in flight with gear retracted or extended, or on the ground. When the brake deice system is activated, hot air is diffused by means of a manifold assembly over the brake

discs on each wheel. Manual and automatic controls are provided. There are two primary occasions which require brake deicing. The first is when an aircraft has been parked in a freezing atmosphere, allowing the brake systems to become contaminated by freezing rain, snow, or ice, and the aircraft must be moved or taxied. The second occasion is during flight through icing conditions, when brake assemblies which are presumed to be frozen must be thawed prior to landing to avoid possible tire damage and loss of directional control. Hot air for the brake deice system comes from the compressor stage of both engines. Hot air is obtained by means of a solenoid valve attached to the bleed air system which serves both the surface deice system and the pneumatic systems operation.

b. Operation. A switch placarded **BRAKE DEICE,** located on the pilot's subpanel (fig. 2-6), controls the solenoid valve by routing power through a control module box under the aisleway floorboards. The system is protected by a 5-ampere circuit breaker, placarded **BRAKE DEICE,** located on the right sidewall circuit breaker panel (fig. 2-7). A timer limits operation to approximately 10 minutes to avoid excessive wheel well temperatures when the landing gear is retracted. The control module also contains a circuit to the green **BRAKE DEICE ON** annunciator, and has a resetting circuit interlocked with the gear uplock switch. When the system is activated, the **BRAKE DEICE ON** annunciator should be monitored and the control switch selected off after the annunciator extinguishes, otherwise, on the next gear extension, the system will restart without pilot action. The control switch should also be selected off if deice operation fails to self-terminate after approximately 10 minutes. If the automatic timer has terminated brake deice operation after the last retraction of the landing gear, the landing gear must be extended in order to obtain further operation of the system.

NOTE

The **BL AIR FAIL** annunciator lights may illuminate momentarily during simultaneous operation of the surface and brake deice systems at low N_1 speed. If lights extinguish immediately they may be disregarded.

(1) During certain ambient conditions, use of the brake deice system may reduce available engine power, and during flight will result in a ITT rise of approximately 20°C. Applicable performance charts should be consulted before brake deice system use. If specified power cannot be obtained without exceeding limits, the brake deice system must be selected off until after takeoff is completed. ITT limitations must also be observed when setting climb and cruise power. The brake deice system is not to be operated above 15°C ambient temperature. During periods of simultaneous brake deice and surface deice operation, maintain 85% N_1 or higher. If inadequate pneumatic pressure is developed for proper surface deice boot inflation, select the brake deice system off. Both sources of pneumatic bleed air must be in operation during brake deice system use. Select the brake deice system off during single engine operation.

2-55. FUEL SYSTEM ANTI-ICING.

a. Description. An oil-to-fuel heat exchanger, located in each engine accessory case, operates continuously and automatically to heat the fuel sufficiently to prevent freezing of any water in the fuel. No controls are involved. Three external fuel vents are provided on each wing. One is recessed to prevent ice formation, the second is flush mounted so that no ice can collect upon it, and the third is electrically heated. Heating is controlled by two toggle switches, placarded **FUEL VENT LEFT** and **RIGHT,** located on the pilot's subpanel (fig. 2-6). They are protected by two 5-ampere circuit breakers, placarded **FUEL VENT, LEFT** and **RIGHT,** located on the right sidewall circuit breaker panel (fig. 2-7).

CAUTION

To prevent overheat damage to electrically heated anti-ice jackets, the **FUEL VENT** heat switches should not be turned on unless cooling air will soon pass over the jackets.

b. Normal Operation. For normal operation, switches for the fuel vent anti-ice circuits are turned on as required during the **BEFORE TAKEOFF** procedures.

2-56. WINDSHIELD ELECTROTHERMAL ANTI-ICE SYSTEM.

a. Description. Both the pilot's and copilot's windshields are provided with an electrothermal anti-ice system. Each windshield is part of an independent electrothermal anti-ice system. Each system is comprised of the windshield assembly with heating wires sandwiched between glass panels, a temperature sensor attached to the glass, an electrothermal controller, two relays, a control switch, and two circuit breakers. Two switches, placarded **WSHLD, PILOT, NORMAL - OFF - HIGH,** and **WSHLD, COPILOT, NORMAL - OFF - HIGH,** located on the pilot's subpanel (fig. 2-6), control system operation. Each switch controls one electrothermal windshield system. The circuits of each system are protected by a 5-ampere circuit breaker and a 50-ampere circuit breaker, which are not accessible to the flight crew.

CAUTION

To help prevent windshield cracking, windshield heat should be placed in the **NORMAL** position for at least 15 minutes prior to using the **HIGH** position.

b. Normal Operation. Two levels of heat are provided through the three position switches, placarded **NORMAL** in the aft position, **OFF** in the center position, and **HIGH** after pulling the switch over a detent and moving it to the down position. In the **NORMAL** position, heat is provided for the major portion of each windshield. In the **HIGH** position, heat is provided at a higher watt density to a smaller portion of the windshield. The lever lock switch feature prevents inadvertent switching to the **HIGH** position during system shutdown.

2-57. PRESSURIZATION SYSTEM.

a. Description. A mixture of engine bleed air and ambient air is available for cabin pressurization at a rate of approximately 10 to 17 pounds per minute. The flow control unit of each engine controls bleed air from the engine to make it usable for pressurization, by mixing ambient air with the bleed air, depending upon aircraft altitude and ambient temperature. On takeoff, excessive pressure bumps are prevented by landing gear safety switch actuated solenoids incorporated in the flow control units. These solenoids, through a time delay, stage the input of ambient air flow by allowing ambient air flow introduction through the left flow control unit fist, then four seconds later allowing ambient air flow through the right flow control unit.

b. Pressure Differential. The pressure vessel is designed for a normal working pressure differential of 6.5 PSI, which will provide a cabin pressure altitude of 8,000 feet at an aircraft altitude of 29,700 feet, and a cabin pressure altitude of 10,000 feet at an aircraft altitude of 34,000 feet.

c. Pressurization Controller The pressurization controller, located on the pedestal extension (fig. 2-12), provides a display of the selected altitude, an altitude selector, and a rate control selector. The cabin and aircraft altitude display is a mechanically coupled dial. The outer scale, **(CABIN ALT)** of the display, indicates the selected cabin altitude. The inner scale **(ACFT ALT)** indicates the corresponding altitude at which the maximum differential pressure would occur. The indicated value on each scale is read as placarded, **ALT - FT X 1000.** The rate control selector, placarded **RATE INC,** regulates the rate at which cabin pressure ascends or descends to the selected altitude. The rate change selected may be from 200 to 2000 feet per minute.

d. Cabin Rate-of-Climb Indicator. An indicator, placarded **CABIN CLIMB,** is located on the center subpanel (fig. 2-6). It is calibrated in thousands of feet per minute change in cabin altitude.

e. Cabin Altitude Indicator. An indicator, placarded **CABIN ALT,** is located on the center subpanel (fig. 2-6). The longer needle indicates aircraft altitude in thousands of feet on the outside dial. The shorter needle indicates pressure differential in PSI on the inner dial. Maximum differential is 6.5 ±.10 PSI.

f. Outflow Valve. A pneumatically operated outflow valve, located in the aft pressure bulkhead, maintains the selected cabin altitude and rate-of-climb commanded by the cabin rate-of-climb and altitude controller. As the aircraft climbs, the controller modulates the outflow valve to maintain a selected cabin rate of climb and increases the cabin differential pressure until the maximum cabin pressure differential is reached. At a cabin altitude of 12,500 feet, a pressure switch mounted on the back of the overhead control panel completes a circuit to illuminate a red **ALT WARN** warning annunciator, to warn of operation requiring oxygen.

g. Safety Valve. Before takeoff, the safety valve is open with equal pressure between the cabin and the outside air. The safety valve closes upon lift off if the switch placarded **CABIN PRESS, DUMP - PRESS - TEST,** located on the pedestal extension (fig. 2-12), is in the **PRESS** mode. The safety valve, adjacent to the outflow valve, provides pressure relief in the event of an outflow valve failure. The safety valve is also used as a dump valve. The safety valve is opened by vacuum, which is controlled by a solenoid valve operated by the **CABIN PRESS** switch. It is wired through the right landing gear safety switch. If either of these switches is open, or if the vacuum source or electrical power is lost, the safety valve will close to atmosphere except at maximum pressure differential of 6.5 ±.10 PSI. A negative pressure relief diaphragm is also incorporated into the outflow and safety valves to prevent outside atmospheric pressure from exceeding cabin pressure during rapid descent.

h. Drain. A drain in the outflow valve static control line is provided for removal of accumulated moisture. The drain is located behind the lower sidewall upholstery access panel in the baggage section of the aft compartment.

i. Flow Control Unit. A flow control unit, located forward of the firewall in each engine nacelle, controls

bleed air flow and the mixing of ambient air to make up the total air flow to the cabin for pressurization, heating, and ventilation. An integral electric solenoid firewall shutoff valve is controlled by the **BLEED AIR VALVES** switches on the copilot's subpanel (fig. 2-6). A solenoid, operated by the right landing gear safety switch, controls the introduction of ambient air to the cabin upon takeoff. Both the ambient air flow control valve and the bleed air flow control valve are motor driven.

The unit receives bleed air from the engine into an ejector which draws ambient air into the venturi of the nozzle. The mixed air is then forced into the bleed air line routed to the cabin.

Bleed air flow is controlled automatically. When the aircraft is on the ground, circuitry from the landing gear safety switch prevents ambient air from entering the flow control unit to provide maximum heating.

The bleed air firewall shutoff valve in the control unit is a spring-loaded bellows-operated valve that is held in the open position by bleed air pressure. When the electric solenoid is shut off, or when bleed air diminishes on engine shutdown (in both cases the pressure to the firewall shutoff valve is cut off), the firewall valve closes.

2-58. OXYGEN SYSTEM.

a. Description. The oxygen system (fig. 2-24) is provided primarily as an emergency system; however, the system may also be used to provide supplemental (first aid) oxygen. One 77 cubic-foot capacity oxygen supply cylinder, charged with aviator's breathing oxygen, is installed in the unpressurized portion of the aircraft behind the aft pressure bulkhead. The pilot's and copilot's positions are equipped with mask mounted diluter demand/100% regulators, which automatically mix the proper amount of oxygen for a given amount of air at altitude. Drop out masks are provided for passengers. A first aid oxygen mask is also provided in the cabin. A gage, placarded **OXYGEN,** located on the copilot's subpanel (fig. 2-6), displays oxygen supply pressure. Oxygen system refilling is accomplished through a single filler valve located on the aft right side of the fuselage exterior. The oxygen system control circuit is protected by a 5-ampere circuit breaker placarded **OXYGEN CONTROL,** located on the right sidewall circuit breaker panel (fig. 2-7). Table 2-4 shows oxygen flow planning rates vs. altitude. Table 2-5 shows oxygen duration capacities of the system in liters per minute (LPM) per mask at normal temperature and pressure, dry (NTPD). Figure 2-25 provides a graph which depicts oxygen cylinder capacity.

b. Oxygen System Operation. A push/pull oxygen on/off control handle, located on the left side of the control pedestal arms the automatically deployed passenger oxygen system and applies oxygen pressure to the crew masks. Pulling this handle out opens a valve on the oxygen cylinder which is located aft of the aft pressure bulkhead. When this handle is pushed in no oxygen will be available anywhere in the aircraft. To ensure oxygen availability, the oxygen on/off control handle should be pulled and the **OXYGEN** pressure gage (located on the copilot's subpanel, fig. 2-6) should be checked prior to engine start.

C. Oxygen Duration. The oxygen system is based on an adequate oxygen flow for a pressure altitude of 35,000 feet. The passenger masks and oxygen duration chart (table 2-5) are based on a flow rate of 3.9 liters per minute - normal temperature and pressure, dry (LPM-NTPD). For oxygen duration computation, each diluter demand mask being used is counted as two masks at 3.9 LPM-NTPD.

d. Pilot and Copilot Oxygen masks. The pilot and copilot are each provided with a diluter-demand quick-donning oxygen mask which is stored overhead in the cockpit. The crew masks are stowed with the oxygen hose plugged in so that oxygen will be immediately available when required. This does not cause a loss of oxygen since the diluter demand masks will deliver oxygen only upon inhalation.

(7) Use of pilot and copilot oxygen masks. To don the mask, grasp the red levers protruding from the stowage compartment and pull the mask down. Inflate the mask harness by depressing the red lever on the left side of the regulator and then don the mask and release the lever. Three modes of operation are available which are controlled by a selector lever located on the bottom right side of the regulator:

(a) **NORMAL** mode, When the selector lever is placed in the **NORMAL** position, oxygen is automatically mixed with the proper amount of air at the aircraft's altitude. The **NORMAL** mode may be selected at the discretion of the user at any altitude.

(b) 100% mode. When the selector lever is placed in the 100% position, pure undiluted oxygen is supplied to the mask. The 100% mode may be selected at the discretion of the user at any altitude.

(c) **EMERG** mode. Turning the **EMERG** knob, located on the bottom of the regulator, places the mask in the emergency mode. In the emergency **(EMERG)** mode the regulator will supply 100% undiluted oxygen to the user under a positive pressure to the face mask. The emergency mode should be used if smoke or fumes are present in the aircraft. The emergency mode may be selected at the discretion of the user at any altitude.

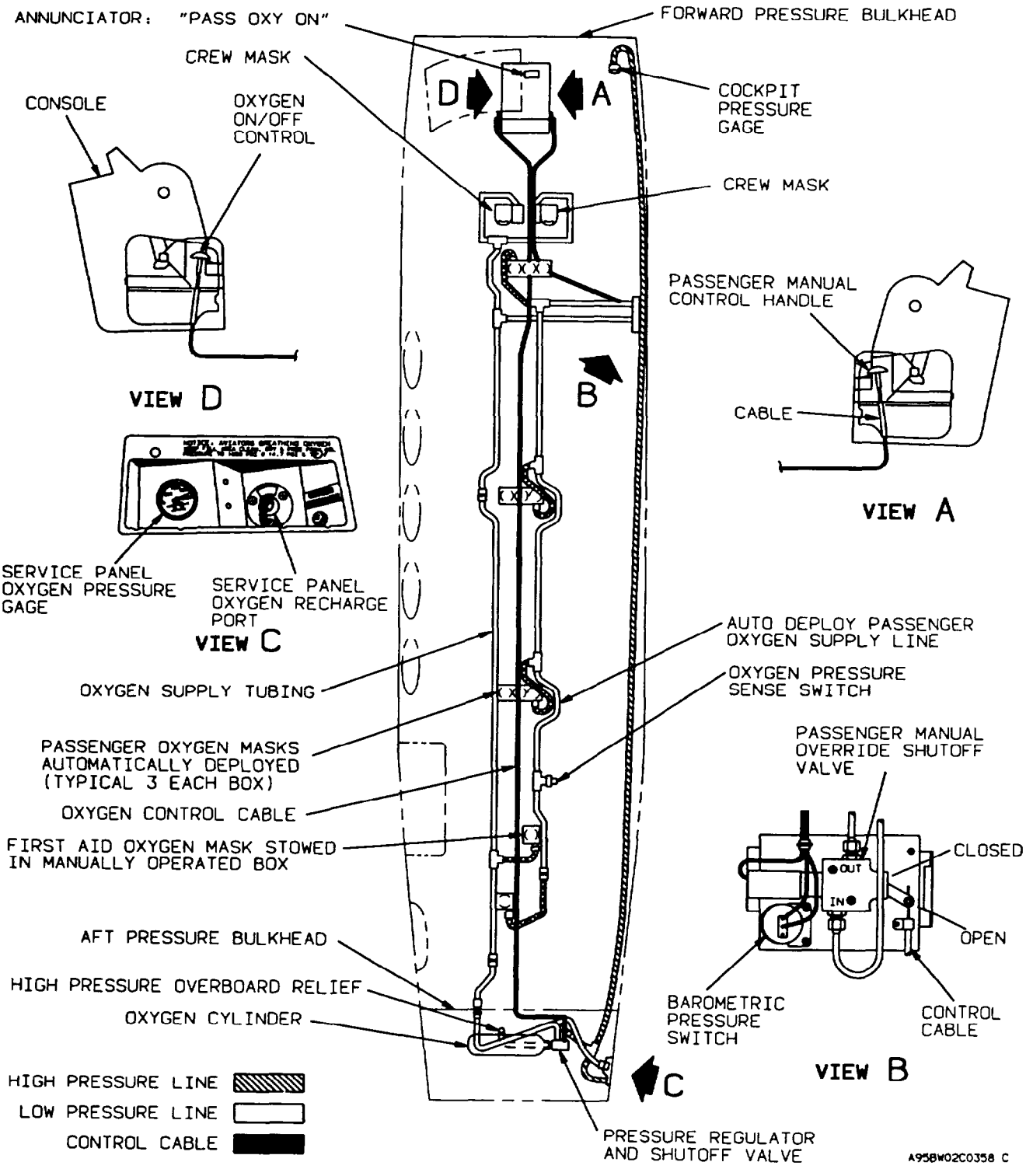

Figure 2-24. Oxygen System

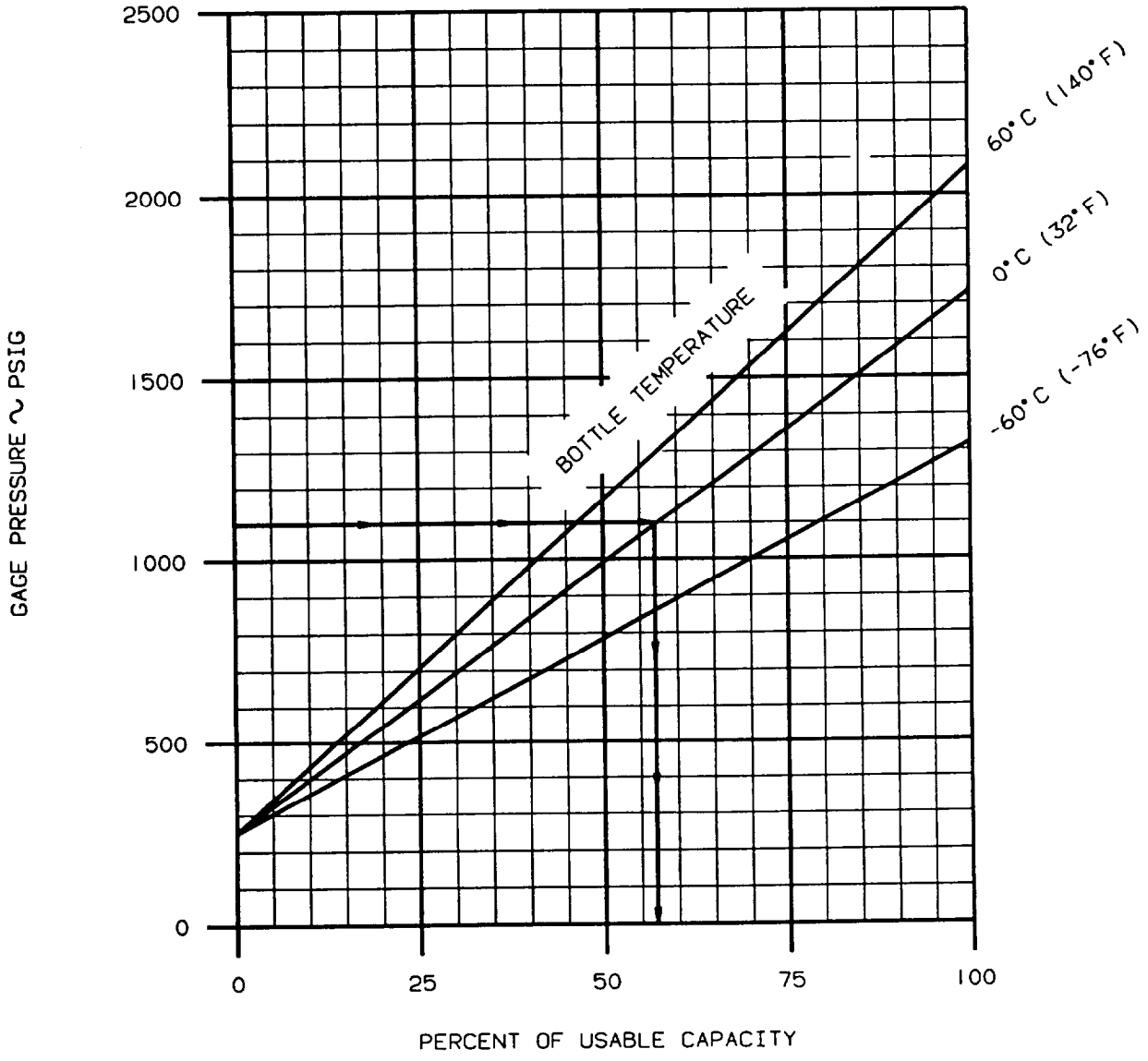

A968W00C0314 C

Figure 2-25. Oxygen Cylinder Capacity

Table 2-4. Oxygen Flow Planning Rates Vs Altitude
(All Flows in LPM Per Mask at NTPD)

CABIN PRESSURE ALTITUDE IN FEET	CREW MASK NORMAL (DILUTER DEMAND) (1)	CREW MASK 100% (1)	PASSSENGER MASK
35,000	-0-(2)	3.1	3.7 (3)
34,000	-0-(2)	3.4	3.7 (3)
33,000	-0-(2)	3.7	3.7 (3)
32,000	-0-(2)	3.9	3.7 (3)
31,000	-0-(2)	4.2	3.7 (3)
30,000	-0-(2)	4.4	3.7 (3)
29,000	-0-(2)	4.7	3.7 (3)
28,000	-0-(2)	5.0	3.7 (3)
27,000	-0-(2)	5.3	3.7 (3)
26,000	-0-(2)	5.6	3.7 (3)
25,000	-0-(2)	5.9	3.7
24,000	-0-(2)	6.2	3.7
23,000	-0-(2)	6.6	3.7
22,000	-0-(2)	6.9	3.7
21,000	-0-(2)	7.2	3.7
20,000	3.6	7.6	3.7
19,000	3.9	7.9	3.7
18,000	4.2	8.3	3.7
17,000	4.5	8.7	3.7
16,000	4.8	9.1	3.7
15,000	5.1	9.5	3.7
14,000	5.4	10.0	3.7
13,000	5.8	10.4	3.7
12,00	6.1	10.9	3.7
11,000	6.5	11.3	3.7
10,000	6.9	11.9	3.7

NOTES:

1) Based on minute volume of 20 LPM-BTPS (Body Temperature and Pressure Saturated).
2) Use 100% oxygen above 20,000 feet.
3) Not recommended for other than emergency descent use above 25,000 feet.

If average climb or descent flows are desired, add the values between altitudes and divide by the number of values used.

For example, to determine the average rate for a uniform descent between 25,000 feet and 15,000 feet perform the following:

5.9 + 6.2 + 6.6 + 6.9 + 7.2 + 7.6 + 3.9 + 4.2 + 4.5 + 4.8 + 5.1 ÷ 11 = 5.7 LPM

This method is preferred over averaging the extremes as some flow characteristics vary in such a way as to yield an incorrect answer.

BT00196

e. **Passenger Oxygen System.** The passenger oxygen system is of the constant flow type. Anytime the cabin pressure altitude exceeds approximately 12,500 feet, a barometric pressure switch automatically energizes a solenoid which opens the passenger oxygen system shut-off valve. The pilot or copilot can open the valve manually anytime by pulling out the passenger oxygen manual control handle, located on the right side of the pedestal (fig. 2-24). Once the passenger oxygen system shut-off valve has been opened (either automatically or manually), oxygen will flow into the passenger oxygen supply line, if the primary oxygen system line has been charged (that is, the oxygen supply cylinder contains oxygen and the **PULL ON SYS READY** handle in the cockpit is pulled out). When the passenger oxygen supply line is charged the green **PASS OXY ON** annunciator on the caution/advisory annunciator panel will illuminate, and the cabin lights, foyer light, and the center baggage compartment light will be illuminated in the full bright mode regardless of the position of the cabin lights switch, placarded **BRIGHT - DIM - OFF,** located on the copilot's subpanel. Oxygen pressure in the passenger line causes the passenger oxygen masks to drop out of the overhead mask compartments. The lanyard on the mask must then be pulled out in order to start the flow of oxygen.

NOTE

The lanyard valve pin must be manually reinserted into the valve to stop the flow of oxygen when the mask is no longer needed.

The passenger oxygen can be shut off and the remaining oxygen isolated to the crew and first air outlets by pulling the **OXYGEN CONTROL** circuit breaker, located on the right sidewall circuit breaker panel (fig. 2-7), providing the **PASSENGER MANUAL O RIDE** handle is pushed in to the OFF position.

f. First Aid Oxygen Mask. A first aid oxygen mask is installed in the aft cabin area as a supplemental or emergency source of oxygen. Anytime the primary oxygen supply line is charged, oxygen can be obtained from the first aid oxygen mask located in the toilet area, by manually opening the overhead access door (placarded **FIRST AID OXYGEN - PULL)** and opening the **ON - OFF** valve inside the box. A placard which reads: **NOTE: CREW SYS MUST BE ON,** reminds the user that the **PULL ON SYS READY** handle in the cockpit must be pulled out before oxygen will flow from the first aid oxygen mask.

2-59. WINDSHIELD WIPERS.

a. Description. Two electrically-operated windshield wipers are provided for use at all flight speeds. A rotary switch, placarded **WINDSHIELD WIPERS,** located on the overhead control panel (fig. 2-23), selects mode of windshield wiper operation. An information placard above the switch states: **DO NOT OPERATE ON DRY GLASS.** Function positions of the switch, as read clockwise, are placarded: **PARK - OFF - SLOW - FAST.** When the switch is held in the spring-loaded **PARK** setting, the blades will return to their normal inoperative position on the glass, then, when released, the switch will return to the **OFF** position, terminating windshield wiper

Table 2-5. Oxygen Duration in Minutes

OXYGEN DURATION WITH FULL BOTTLE (100% CAPACITY)									
STATED CYLINDER SIZE (CU FT)	*NUMBER OF PEOPLE USING								
	1	2	3	4	5	6	7	8	9
	DURATION IN MINUTES								
77	488	244	182	122	97	81	69	61	54
STATED CYLINDER SIZE (CU FT)	*NUMBER OF PEOPLE USNG								
	10	11	12	13	14	15	*16	*17	
	DURATION IN MINUTES								
77	48	44	40	37	34	32	30	28	

* For oxygen duration computations, count each diluter-demand crew mask in use as 2 (e.g. with 4 passengers and a crew of 2, enter the table at 8 people using).

BT05821

operation. The **FAST** and **SLOW** switch positions are separate operating speed settings for wiper operation. The windshield wiper circuit is protected by one lo-ampere circuit breaker, placarded **WSHLD WIPER,** located on the right sidewall circuit breaker panel (fig. 2-7).

CAUTION

Do not operate windshield wipers on dry glass. Such action can damage the linkage as well as scratch the windshield glass.

b. Normal Operation. To start, turn **WINDSHIELD WIPER** switch to **FAST** or **SLOW** speed, as desired. To stop, turn the switch to the **PARK** position and release. The blades will return to their normal inoperative position and stop. Turning the switch only to the **OFF** position will stop the windshield wipers, without returning them to the normal inactive position.

2-60. CHEMICAL TOILET.

a. Description. A side-facing chemical toilet which can also be used as an additional seat is installed in the aft cabin area. Two hinged-lid half-sections must be raised to gain access to the toilet. Waste is stored within a removable container located below the seat in the cabinet assembly. This non-flushing system uses a dry chemical preparation to deodorize the stored waste. A toilet tissue dispenser is contained in a slide-out compartment on the forward side of the toilet cabinet assembly. A box of disposable waste container liners and a box of chemical deodorant packets are also stored in the cabinet.

b. Operation. During use, a removable throw-away plastic liner is attached to the waste container. After use, dry chemical deodorant obtained from the storage cabinet is deposited on the waste and the hinged lid sections are closed over the cavity. After each flight, the waste container must be removed, emptied, relined, and replaced in the cabinet. Consumable toilet items should be resupplied as needed.

2-61. SUN VISORS.

CAUTION

When adjusting the sun visors, grasp only by the top metal attachment to avoid damage to the plastic shield.

Individual sun visors are provided for the pilot and copilot. Each visor is manually adjustable. When not needed as a sun shield, each visor may be rotated to a position flush with the top of the cockpit so that it does not obstruct view through the windows.

Section VIII. HEATING, VENTILATION, COOLING, AND ENVIRONMENTAL CONTROL SYSTEM

2-62. HEATING SYSTEM.

Warm air for heating the cockpit and cabin and for defrosting the windshield is provided by bleed air from both engines. Engine bleed air is combined with ambient air in the heating and pressurization flow control unit in each engine nacelle. If the mixed bleed air is too warm for cockpit comfort, it is cooled by being routed through an air-to-air heat exchanger located in the forward portion of each inboard wing. If the mixed bleed air is not too warm, the air-to-air heat exchangers are bypassed. The mixed bleed air is then ducted to a mixing plenum, where it is mixed with cabin recirculated air. The warm air is then ducted to the cockpit outlets, windshield defroster outlets, and floor outlets in the cabin compartment. The environmental system is shown in figure 2-26.

a. Bleed Air Flow Control Unit. A bleed air flow control unit, located forward of the firewall in each engine nacelle, controls the flow of bleed air and the mixing of ambient air to make up the total airflow to the cabin for heating, windshield defrosting, pressurization, and ventilation. The unit is electronically controlled with an integral electric solenoid firewall shutoff valve, controlled by the **BLEED AIR VALVES** switches located on the copilot's subpanel (fig. 2-6), and a normally open solenoid valve operated by the right landing gear safety switch.

b. Pneumatic Bleed Air Shutoff Valve. A pneumatic shutoff valve is provided in each engine nacelle to control the flow of bleed air to the surface and brake deice systems. These valves are controlled by the **BLEED AIR VALVES** switches located on the copilot's subpanel (fig. 2-6).

c. Bleed Air Valve Switches. The bleed air flow control unit shutoff valve and pneumatic bleed air shutoff valves are controlled by two switches placarded LEFT and **RIGHT BLEED AIR VALVES, OPEN - ENVIR OFF - INSTR & ENVIR OFF,** located on the copilot's subpanel

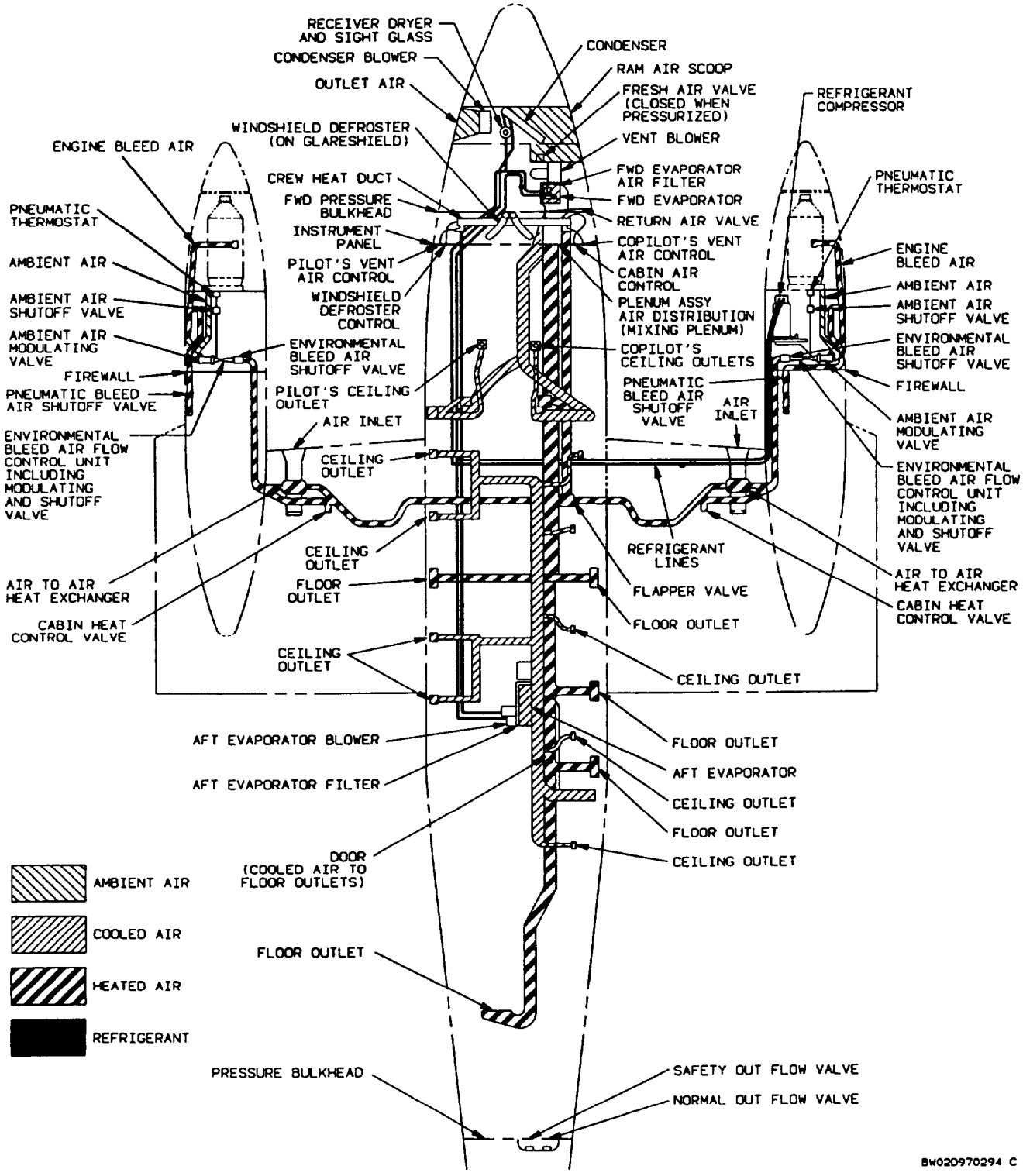

Figure 2-26. Environmental System

(fig. 2-6). When set to the **OPEN** position, both the environmental flow control unit shutoff valve and the pneumatic shutoff valve are open; when set to the **ENVIR OFF** position, the environmental flow control unit shutoff valve is closed, and the pneumatic bleed air valve is open; in the **INSTR & ENVIR OFF** position, both are closed. For maximum cooling on the ground, place the bleed air valve switches in the **ENVIR OFF** position.

d. Cabin Temperature Mode Selector Switch. A switch placarded **CABIN TEMP MODE - OFF - AUTO - MAN HEAT - MAN COOL,** located on the copilot's subpanel (fig. 2-6), controls cockpit and cabin heating and air conditioning. When the cabin temperature mode selector switch is set to the **AUTO** position, the heating and air conditioning systems are automatically controlled. Control signals from the temperature control box are transmitted to the bleed air heat exchanger bypass valves. Here, the temperature of the air flowing to the cabin is regulated by the bypass valves controlling the amount of air bypassing the heat exchangers. When the temperature of the cabin air has reached the temperature setting of the cabin temperature control rheostat, the automatic temperature control allows hot air to bypass the air-to-air exchangers, admitting hot air into the cabin. When the bypass valves are in the fully closed position, allowing no air to bypass the heat exchangers, the air conditioner begins to operate, providing additional cooling.

e. Cabin Temperature Control Rheostat. A control knob placarded **CABIN TEMP - INCR,** located on the copilot's subpanel (fig. 2-6), provides regulation of cabin temperature when the cabin temperature mode selector switch is set to the **AUTO** position. A temperature sensing unit in the cabin, in conjunction with the setting of the cabin temperature control rheostat, initiates a heat or cool command to the temperature controller for the desired cockpit or cabin compartment environment.

f. Manual Temperature Control Switch. A switch placarded **MANUAL TEMP - INCR - DECR,** located on the copilot's subpanel (fig. 2-6), controls cockpit and cabin compartment temperature with the cabin temperature mode selector switch set to the **MAN HEAT** or **MAN HEAT** or **MAN COOL** position. The manual temperature control switch controls the cockpit and cabin temperature by providing a means of manually changing the amount that the bleed air bypass valves are opened. To increase cabin temperature, the switch is held to the **INCR** position. To decrease cabin temperature, the switch is held to the **DECR** position. Approximately 30 seconds per valve is required to drive the bypass valves to the fully open or fully closed position. Only one valve moves at a time.

g. Forward Vent Blower Switch. The forward vent blower is controlled by a switch placarded **VENT BLOWER - HIGH - LO - AUTO,** located on the copilot's subpanel (fig. 2-6). In the **AUTO** position, the fan will run at low speed. The forward vent blower will not operate when the **CABIN TEMP MODE** selector switch is set to the **OFF** position.

h. Aft Vent Blower Switch. The aft vent blower is controlled by the switch placarded **AFT BLOWER - ON - OFF,** located on the copilot's subpanel (fig. 2-6). The blower operates continuously when the switch is placed in the ON position with the air conditioner compressor operating.

(1) Automatic heating mode.

1. **BLEED AIR VALVES** switches - **OPEN, LEFT** and **RIGHT.**
2. **CABIN TEMP MODE** switch - **AUTO.**
3. **CABIN TEMP** rheostat - As required.
4. **CABIN, PILOT, COPILOT,**
5. and **DEFROST AIR** knobs - As required.

(2) Manual heating mode.

1. **BLEED AIR VALVES** switches - **OPEN, LEFT**
2. and **RIGHT.**
3. **CABIN TEMP MODE** switch **- MAN HEAT.**
4. **VENT BLOWER** switches - As required.
5. **MANUAL TEMP** switch - As required.
6. **CABIN, PILOT, COPILOT,** and **DEFROST AIR** knobs - As required.

2-63. AIR CONDITIONING SYSTEM.

a. Description. Cabin air conditioning is provided by a refrigerant-gas, vapor-cycle refrigeration system (fig. 2-26). The system consists of a belt-driven engine-mounted compressor, installed on the # 2 engine accessory section, refrigerant plumbing, N_1 speed switch, high and low pressure protection switches, condenser coil, condenser underpressure switch, condenser blower, forward and aft evaporators, receiver-dryer, expansion valve, and a bypass valve. The plumbing from the compressor is routed through the

right inboard wing leading edge to the fuselage and then forward to the condenser coil, receiver-dryer, expansion valve, bypass valve, and forward evaporator, which are located in the nose of the aircraft.

(1) Forward evaporator. The forward evaporator and blower supplies airflow for the cockpit, forward ceiling outlets, and forward floor outlets. The forward evaporator blower is controlled by a switch placarded **VENT BLOWER HIGH - LO - AUTO,** located on the copilot's subpanel (fig. 2-6).

(2) Aft evaporator. The aft evaporator and blower are located in the fuselage center aisle equipment bay, aft of the rear spar. Environmental air is circulated through the evaporator in either manual or automatic control modes. The rear evaporator supplies airflow for the aft ceiling outlets, rear floor outlets, and toilet compartment.

(3) High and low pressure limit switches. High and low pressure limit switches are provided to prevent compressor operation beyond operational limits. When the low or high pressure switches are activated, compressor operation will be terminated. When compressor operation has been terminated by limit switch activation, the system should be thoroughly checked before returning it to service.

(4) Thermal sense switch. A thermal sense switch is installed on the forward evaporator. This sense switch actuates a hot gas bypass valve which bypasses a portion of the refrigerant from the forward evaporator, thereby preventing icing of the evaporator.

(5) Condenser blower. A vane-axial blower draws air through the condenser when the aircraft is on the ground.

b. Norma/ Operation.

(1) Automatic cooling mode.

1. **BLEED AIR VALVES** switches - **OPEN, LEFT** and **RIGHT.**
2. **CABIN TEMP MODE** switch - **AUTO.**
3. **CABIN TEMP** rheostat - As required.
4. **CABIN, PILOT, COPILOT,** and **DEFROST AIR** knobs - As required.

(2) Manual cooling mode.

1. **BLEED AIR VALVES** switches - **OPEN, LEFT** and **RIGHT.**

NOTE

For maximum cooling on the ground, set the **BLEED AIR VALVES** switches to the **ENVIR OFF** position.

2. **CABIN TEMP MODE** switch - **MAN COOL.**

2-64. UNPRESSURIZED VENTILATION.

Ventilation is provided by two sources. One source is through the bleed air heating system in both the pressurized and unpressurized mode. The second source of ventilation is obtained from ram air which enters the condenser section in the nose and passes through a check valve in the vent blower plenum. The check valve closes during pressurized operation. Ventilation from this source is in the unpressurized mode only, with the **CABIN PRESS** switch in the DUMP position. The check valve closes during pressurized operation. Ram air ventilation is distributed through the main ducting system to all outlets. Ventilation air, ducted to each individual eyeball cold air outlet, can be directionally controlled by moving the ball in the socket. Volume is regulated by twisting the outlet to open or close the valve.

2-65. ENVIRONMENTAL CONTROLS.

An environmental control section on the copilot's subpanel (fig. 2-6) provides for automatic or manual control of the system, This section contains all the major controls of the environmental system, including bleed air valve switches, forward and aft vent blower switches, manual temperature switch for control of the heat exchanger valves, a cabin temperature level control, and the cabin temperature mode selector switch for selecting automatic heating/ cooling or manual heating/cooling.

a. Heating Mode.

(1) If the cockpit is too cold:

1. **PILOT** and **COPILOT AIR** knobs - As required.
2. **DEFROST AIR** knob - As required.
3. **CABIN AIR** knob - Pull out in small increments. Allow 3 to 5 minutes after each adjustment for system to stabilize.

(2) If the cockpit is too hot:

1. **CABIN AIR** knob - As required.
2. **PILOT** and **COPILOT AIR** knobs - In as required.
3. **DEFROST AIR** knob - In as required.

b. Cooling Mode:

(1) If the cockpit is too co/d:

1. **PILOT** and **COPILOT AIR** knob - In as required.
2. **DEFROST AIR** knob - In as required.
3. Overhead cockpit outlets - As required.

(2) If the cockpit is too hot:

1. **PILOT** and **COPILOT AIR** knobs - Out as required.
2. **CABIN AIR** knob - Close in small increments. Allow 3 - 5 minutes after each adjustment for system to stabilize. If **CABIN AIR** knob is completely closed before obtaining satisfactory cockpit comfort, it may be necessary to place the **AFT BLOWER** switch in the **ON** position to activate the aft evaporator and recirculate cabin air.

c. Automatic Mode Control. When the **AUTO** mode is selected on the **CABIN TEMP MODE** switch, the heating and air conditioning systems are automatically controlled. When the temperature of the cabin has reached the selected setting, the automatic temperature control allows heated air to bypass the air-to-air exchangers in the wing center section. The warm bleed air is mixed with the cooled air. The rear evaporator picks up recirculated cabin air only.

When the automatic control drives the environmental system from a heat mode to a cooling mode, the bypass valves close. When the left bypass valve reaches a fully closed position, the refrigeration system will begin cooling, provided the right engine N_1 speed is above 65%. When the bypass valve is opened to a position approximately 30° from full open, the refrigeration system will turn off.

The **CABIN TEMP** control rheostat provides regulation of the temperature level in the automatic mode. A temperature sensing unit in the cabin, in conjunction with the control setting, initiates a heat or cool command to the temperature controller for desired cockpit and cabin environment.

d. Manual Mode Control. With the **CABIN TEMP MODE** switch in the **MAN HEAT** or **MAN COOL** position, regulation of the cabin temperature is accomplished manually with the **MANUAL TEMP** switch.

(1) In the **MAN HEAT** mode, the automatic system is overridden and the system is controlled by opening and closing the bleed air bypass valves (two) using the **MANUAL TEMP** switch. To increase cabin temperature, hold the switch to the **INCR** position; to decrease cabin temperature, hold the switch in the **DECR** position. Allow approximately 30 seconds per valve to drive the bypass valves to the fully open or fully closed position. Only one valve moves at a time.

(2) With the **CABIN TEMP MODE** switch in the **MAN COOL** position, the automatic temperature control system is bypassed. When the left bypass valve reaches a fully closed position, the refrigeration system will begin cooling, provided the right engine N_1 speed is above 65%. When the bypass valve is opened to a position approximately 30° from full open, the refrigeration system will turn off. Hold the **MANUAL TEMP** switch to **DECR** position for approximately one minute to fully close air-to-air heat exchanger bypass valves,

(3) Bleed air entering the cabin is controlled by two switches placarded **LEFT** and **RIGHT BLEED AIR VALVES OPEN - ENVIR OFF - INSTR & ENVIR OFF.** When a switch is in the **OPEN** position, the environmental flow control unit shutoff valve and the pneumatic shutoff valve are open. When the switch is in the **ENVIR OFF** position, the environmental flow control unit shutoff valve is closed and the pneumatic bleed air valve is open. In the **INSTR & ENVIR OFF** position, both are closed. For maximum cooling on the ground, place the bleed air valve switches in the **ENVIR OFF** position.

(4) The forward vent blower is controlled by a switch placarded **VENT BLOWER - HIGH - LO - AUTO.** The **HIGH** and **LO** positions regulate the blower in two speeds of operation. In the AUTO position, the fan will run at low speed except when the **CABIN TEMP MODE** switch is placed in the **OFF** position. In the **OFF** position, the blower will not operate.

(5) The aft vent blower is controlled by the switch placarded **AFT VENT BLOWER - ON - OFF.** The blower operates continuously when the switch is placed in the ON position with the air conditioner compressor running.

Section IX. ELECTRICAL POWER SUPPLY AND DISTRIBUTION SYSTEM

2-66. DESCRIPTION.

The aircraft employs both direct current (DC) and alternating current (AC) electrical power. The DC electrical power supply (fig. 2-27) is the basic power system energizing most aircraft circuits. Electrical power is used to start the engines, power the landing gear and flap motors, operate the standby fuel pumps, ventilation blower, lights, and electronic equipment. AC power is obtained from the DC power system through inverters. The single phase AC power system is shown in figure 2-28. The three sources of DC power consist of one 20 cell 34-ampere/hour battery and two 250-ampere starter-generators. DC power may be applied to the aircraft through an external power receptacle on on the underside of the right wing, just outboard of the nacelle. The starter-generators are controlled by generator control units. The output of each generator passes through a cable to the respective generator bus. Other buses distribute power to aircraft DC loads, deriving power from the generator buses. The generators are paralleled to balance the DC loads between the two units. When one of the generating systems is not on line, and no fault exists, all aircraft DC requirements may be supplied by either the other on-line generating system or by an external power source. The generator system is designed to allow cross starting of the other engine. When one generator is on line, all current limiters are bypassed while starting the other engine. Most DC distribution buses are connected to both generator buses but have isolation diodes to prevent power crossfeed between the generating systems, when connection between the generator buses is lost. Thus, when either generator is lost because of a ground fault, the operating generator will supply power for all aircraft DC loads except those receiving power from the inoperative generator's bus, which cannot be crossfed. When a generator is not operating, reverse current and over-voltage protection is automatically provided. Two inverters operating from DC power produce the required single-phase AC power.

2-67. DC POWER SUPPLY.

One nickel-cadmium battery furnishes DC power when the engines are not operating. This 24-volt 34-ampere/hour battery, located in the right wing center section, is accessible through a panel on the top of the wing. DC power is produced by two engine-driven 28 volt, 250-ampere starter-generators. Controls and indicators associated with the DC supply system are a battery switch, two generator switches, and two DC volt-loadmeters.

a. Battery Switch. A switch, placarded **BATT, OFF - ON,** is located on the pilot's subpanel (fig. 2-6) under the **MASTER SWITCH** (gang bar). The **BATT** switch controls DC power to the aircraft bus system through the battery relay, and must be **ON** to allow external power to enter aircraft circuits. When the **MASTER SWITCH** (gang bar) is placed down, the **BATT** switch is forced **OFF.**

NOTE

With battery or external power removed from the aircraft electrical system due to fault, power cannot be restored to the system until the **BATT** switch is moved to **OFF,** then **ON.**

b. Generator Switches. Two switches, placarded **GEN 1** and **GEN 2, OFF - ON - GEN RESET,** are located on the pilot's subpanel (fig. 2-6). These switches control electrical power from the designated generator to paralleling circuits and the bus distribution system. When a generator is removed from the aircraft electrical system, due either to fault or from placing the **GEN** switch in the **OFF** position, the affected unit cannot have its output restored to aircraft use until the **GEN** switch is moved to **RESET,** then **ON.**

c. Master Switch. All electrical current may be shut off using the **MASTER SWITCH** gang bar (fig. 2-6) which extends above the battery and generator switches. The **MASTER SWITCH** gang bar is moved upward or generator switch is turned on. When moved downward, the bar positions the switches to the OFF position.

d. DC Volt-loadmeters. Two volt-loadmeters, located on the overhead control panel (fig. 2-23), display bus voltage and current load as a percentage of maximum from the left and right generating systems. The volt-loadmeters normally display load. Voltage may be read by depressing a pushbutton switch on the respective volt-loadmeter.

e. Battery Charge Monitor. Nickel-cadmium battery overheating will cause the battery charge current to increase if thermal runaway is imminent. The aircraft has a charge-current sensor which will detect a charge current. The charge current system senses battery current through a shunt in the negative lead of the battery. Any time the battery charging current exceeds approximately 7 amperes for 6 seconds or longer, the amber **BATTERY CHG** annunciator and the **MASTER CAUTION** annunciator will illuminate. Following a battery engine start, the caution annunciator will illuminate approximately six seconds after the generator switch is placed in the **ON** position. The annunciator will normally extinguish within two to five minutes, indicating that the battery is approaching a full charge. The time interval will increase if the battery has a low State Of charge, the battery temperature is very low, or if the battery

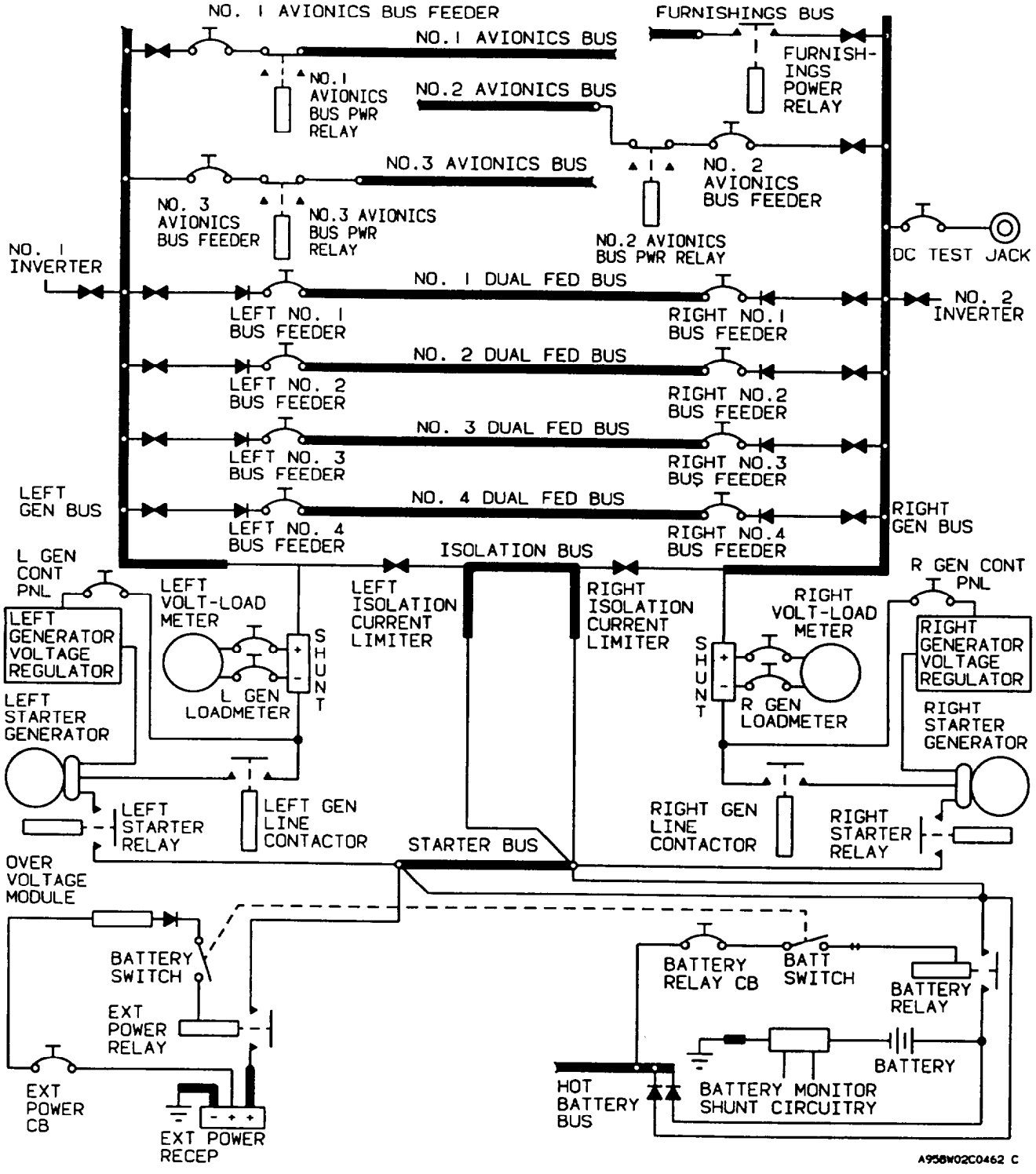

Figure 2-27. DC Electrical System (Sheet 1 of 3)

FURNISHINGS BUS

REFRESHMENT BAR
VANITY HEAT AND TOILET

NO. 1 AVIONICS BUS

NO. 1 COMM RECEIVER
NO. 1 NAV RECEIVER
ADF
GPAAS
NO. 1 DME (NAV/TACAN)
NO. 1 AUTOPILOT
NO. 2 RMI
NO. 1 FLIGHT DIRECTOR
NO. 1 TRANSPONDER (MODE S)
UHF COMM
WEATHER MAPPING SYSTEM

NO. 2 AVIONICS BUS

NO. 2 COMM TRANSCEIVER
NO. 2 NAV RECEIVER
NO. 2 DME
NO. 2 FLIGHT DIRECTOR
NO. 2 AUTOPILOT
NO. 2 TRANSPONDER (IFF)
TRANSPONDER EMERGENCY MODE
STANDBY ALTIMETER
HF RECEIVE
NO. 1 RMI

NO. 3 AVIONICS BUS

RADAR
HF TRANSMIT
RADIO ALTIMETER
FLIGHT MANAGEMENT SYSTEM
GLOBAL POSITIONING SYSTEM
STANDBY GYRO HORIZON
STANDBY GYRO HORIZON BATTERY
AIRBORNE TELEPHONE

LEFT GENERATOR BUS

PILOT WINDSHIELD ANIT-ICE

RIGHT GENERATOR BUS

COPILOT WINDSHIELD ANTI-ICE
VENT BLOWER
AFT EVAPORATOR BLOWER
AIR CONDITIONER CLUTCH

NO. 1 DUAL FED BUS

AVIONICS MASTER CONTROL
TAIL FLOOD LIGHTS
LEFT LANDING LIGHT
LEFT MAIN ENGINE ANTI-ICE
LEFT STANDBY ENGINE ANTI-ICE
PROP SYNC
LEFT FUEL VENT HEAT
LEFT BLEED AIR WARNING
PILOT VS/ALTIMETER
PILOT TURN AND SLIP INDICATOR
LEFT PITOT HEAT
BEACON LIGHTS
LEFT GENERATOR CONTROL
LEFT ENGINE FUEL CONTROL HEAT
FIRE DETECTOR
BRAKE DEICE
ANNUNCIATOR POWER
STALL WARN
PILOT EADI
OUTSIDE AIR TEMPERATURE
AUTO OXYGEN CONTROL
PROP AUTO HEAT
STROBE LIGHT
LEFT ENGINE INSTRUMENTS
LEFT BLEED AIR CONTROL
LEFT CHIP DETECTOR
PNEUMATIC SURFACE DEICE
LANDING GEAR WARNING HORN
AUTOPILOT TRANSFER
PILOT AUDIO
CABIN LIGHTS
AVIONICS AND ENGINE INSTRUMENT LIGHTS

A95BW02C0511 C

Figure 2-27. DC Electrical System (Sheet 2 of 3)

NO. 1 DUAL FED BUS (Cont'd)

PILOT AIR DATA
CABIN PRESSURE CONTROL
SIDE PANEL/OVERHEAD FLOOD LIGHTS
PILOT EHSI
EFSI AUXILIARY BATTERY
AURAL WARNING
COCKPIT VOICE RECORDER
PILOT FLIGHT INSTRUMENT LIGHTS

NO. 2 DUAL FED BUS

STALL WARNING HEAT
TAXI LIGHT
RIGHT ENGINE INSTRUMENTS
RIGHT MAIN ENGINE ANTI-ICE
AUTOFEATHER
ANNUNCIATOR INDICATOR
COPILOT FLIGHT INSTRUMENT LIGHTS
CABIN READING LIGHTS
CABIN AUDIO
COPILOT VS/ALT
COPILOT AUDIO
COPILOT TURN AND SLIP INDICATOR
RIGHT PITOT HEAT
NAV LIGHTS
RIGHT LANDING LIGHT
RIGHT STANDBY ENGINE ANTI-ICE
WINDSHIELD WIPER
INSTRUMENT INDIRECT LIGHTS
OVERHEAD, SUBPANEL AND CONSOLE LIGHTS
RIGHT GENERATOR CONTROL
RIGHT BLEED AIR CONTROL
COPILOT EADI
COPILOT EHSI
COPILOT AIR DATA
LANDING GEAR CONTROL
ICE LIGHTS
RIGHT ENGINE FUEL CONTROL HEAT
RIGHT CHIP DETECTOR
RIGHT FUEL VENT HEAT
RIGHT BLEED AIR WARNING
LANDING GEAR POSITION INDICATOR
RUDDER BOOST CONTROL
CABIN TEMP CONTROL
MULTIFUNCTION DISPLAY
STANDBY EFIS ADI
CIGARETTE LIGHTER

NO. 3 DUAL FED BUS

LEFT MANUAL PROP DEICE
LEFT IGNITOR POWER
LEFT STANOBY PUMP
LEFT AUX FUEL QUANTITY WARNING AND TRANSFER
FLAP MOTOR
LEFT START CONTROL
LEFT FUEL PRESSURE WARNING
FLAP CONTROL AND INDICATOR
LEFT FIREWALL VALVE
LEFT FUEL QUANTITY

NO. 4 DUAL FED BUS

RIGHT MANUAL PROP DEICE
RIGHT IGNITOR POWER
RIGHT STANDBY PUMP
RIGHT AUX FUEL QUANTITY WARNING AND TRANSFER
MANUAL PROP DEICE CONTROL
RIGHT START CONTROL
RIGHT FUEL PRESSURE WARNING
PROP GOVERNOR
RIGHT FIREWALL VALVE
RIGHT FUEL FUEL QUANTITY
FUEL CROSSFEED

HOT BATTERY BUS

LEFT FIREWALL FUEL SHUTOFF VALVE
RIGHT FIREWALL FUEL SHUTOFF VALVE
BATTERY RELAY
LEFT ENGINE FIRE EXTINGUISHER
RIGHT ENGINE FIRE EXTINGUISHER
NAV MEMORY
ENTRY LIGHTS

A95BW02C0510 C

Figure 2-27. DC Electrical System (Sheet 3 of 3)

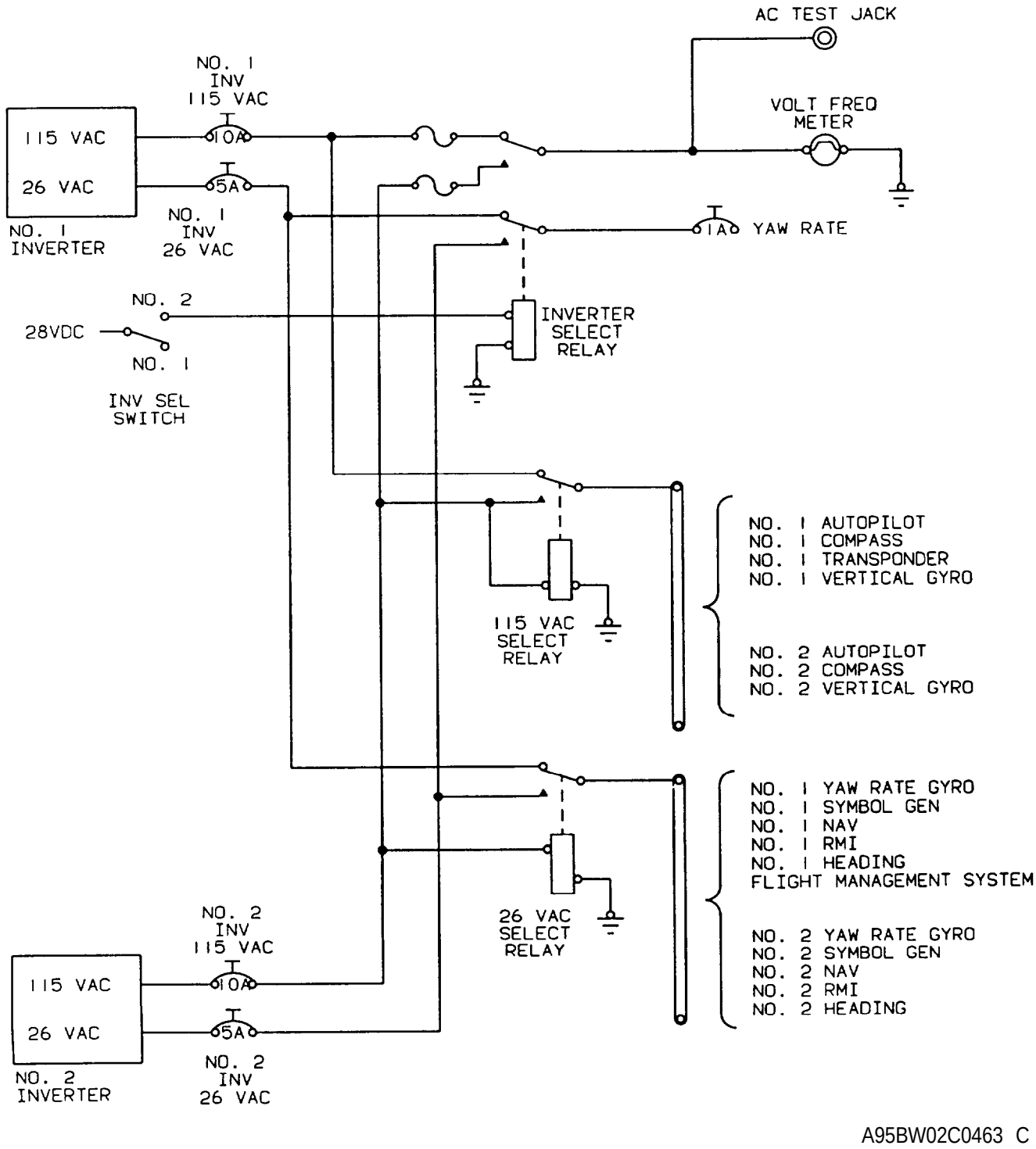

Figure 2-28. Single Phase AC Electrical System

has previously been discharged at a very low rate (i.e., battery operation of radios or lights for prolonged periods). The caution annunciator may also illuminate for short intervals after landing gear and/or flap operation. If the caution annunciator should illuminate during normal steady-state cruise, this indicates that conditions exist that may cause a battery thermal runaway. If this occurs, the battery current should be monitored using the volt-loadmeters. If battery current continues to increase, the battery is in thermal runaway and should be selected OFF and may be turned back ON only for gear and flap extension and approach to landing.

f. Generator *Out Warning Annunciators.* Two caution/advisory annunciator panel fault annunciators inform the pilot when either generator is not delivering current to the aircraft DC bus system. These annunciators are placarded **L DC GEN** and **R DC GEN.** Illumination of the two **MASTER CAUTION** annunciators and either fault annunciator indicates that either the identified generator has failed or voltage is not sufficient to keep it connected to the power distribution system.

CAUTION

The GPU shall he adjusted to regulate at 28 ±.2 volts. The GPU shall be capable of producing 1000 amperes for 5 seconds, 500 amperes for 2 minutes, and 300 amperes continuously.

g. DC External Power Source. External DC power can be applied to the aircraft through an external power receptacle on the underside of the right wing, just outboard of the engine nacelle (fig. 2-1). The receptacle is installed inside the wing structure and is accessible through a hinged access panel. DC power is supplied through the DC external power plug, through the external power relay, directly to the battery bus. Turn off all external power while connecting the power cable to or removing it from the external power supply receptacle. The holding coil circuit of the relay is energized by the external power source when the battery switch is in the ON position. The GPU shall be adjusted to regulate at 28.2 volts maximum to prevent damage to the aircraft battery. The EXT PWR annunciator indicates that the DC external power plug is connected.

h. Circuit Breakers. The right and left sidewall circuit breaker panels (fig. 2-7 and 2-15) contain the circuit breakers for most aircraft systems. The circuit breakers on the panels are grouped into areas which are placarded as to their general function. A DC power distribution panel is mounted beneath the aisleway, forward of the main spar. This panel contains higher current rated circuit breakers and is not accessible to the flight crew under normal conditions.

2-68. AC POWER SUPPLY.

AC power for the aircraft is supplied by two single-phase inverters, which obtain operational current from the DC power system. Each inverter provides 115 and 26 volts, 400 Hz AC output. The inverters are protected by circuit breakers mounted on the DC power distribution panel mounted beneath the floor.

(1) AC power annunciators. Illumination of the two **MASTER WARNING** annunciators, and the illumination of the **INVERTER** warning annunciator indicates inverter failure.

(2) Inverter control switches. The inverters are controlled by a switch placarded **INVERTER, NO 1 - OFF - NO 2,** located on the pilot's subpanel (fig. 2-6).

a. Volt-Frequency Meter. A volt-frequency meter is located on the overhead control panel (fig. 2-23). Normal bus conditions will be indicated by a reading of 115 VAC and 400 Hz. The volt-frequency meter normally displays frequency. Voltage may be read by depressing a pushbutton switch on the meter.

SECTION X. LIGHTING

2-69. EXTERIOR LIGHTING.

Exterior lighting (fig. 2-29) consists of a navigation light on the aft end of the aft portion of the vertical stabilizer; one standard navigation light on the outside of each wing tip; two strobe beacons, one on top of the horizontal stabilizer (directly above the vertical stabilizer) and one on the underside of the fuselage section; three white strobe lights, one on each wing tip and one on the tail; Two recognition lights, one in the leading edge of each wing tip; dual landing lights and a taxi light mounted on the nose gear assembly; two ice lights, one light flush mounted in each nacelle positioned to illuminate along the leading edge of each outboard wing; two tail floodlights which illuminate the vertical stabilizer; and an entry light that illuminates the ramp area around the airstair door.

a. Navigation Lights. The navigation lights are controlled by and the circuit is protected by a S-ampere circuit breaker switch placarded **NAV,** located on the pilot's subpanel (fig. 2-6).

b. Strobe Beacons. One strobe beacon is installed on the underside of the fuselage, and another is installed on top of the horizontal stabilizer. These lights are controlled by and their circuits are protected by a lo-ampere circuit-breaker switch, placarded **BEACON,** located on the pilot's subpanel (fig. 2-6).

c. *Strobe* Lights. One white strobe light is installed on each wing tip and one is installed on the tail. These lights are controlled by and their circuits are protected by a 5-ampere circuit-breaker switch, placarded **STROBE,** located on the pilot's subpanel (fig. 2-6).

d. Landing Lights. Dual landing lights are mounted on the nose gear assembly. The lights are controlled by and the circuits are protected by two lo-ampere circuit-breaker switches placarded **LANDING - LEFT** and **LANDING - RIGHT,** located on the pilot's subpanel (fig. 2-6). Illumination of the landing lights is indicated by a green advisory light, placarded **LDG/TAXI LIGHT,** located on the aircraft annunciator panel (fig. 2-6).

NOTE

Landing lights are not automatically turned off when the landing gear is retracted.

e. Taxi Light. A single taxi light is mounted on the nose gear assembly. The taxi light is controlled by and the circuit is protected by a 15-ampere circuit-breaker switch placarded **TAXI,** located on the pilot's subpanel (fig. 2-6). Illumination of the taxi light is indicated by a green advisory light, placarded **LDG/TAXI LIGHT,** located on the aircraft annunciator panel (fig. 2-6).

NOTE

The taxi light is not automatically turned off when the landing gear is retracted.

f. Ice Lights. The ice lights are controlled by and the circuit is protected by a 5-ampere circuit-breaker switch placarded ICE on the pilot's subpanel (fig. 2-6).

g. Recognition Lights. A white recognition light is mounted in the leading edge of each wing tip. The recognition lights are controlled by and the circuit is protected by a 7 1/2-ampere circuit-breaker switch placarded **RECOG,** located on the pilot's subpanel (fig. 2-6).

h. Tail Flood Lights. A white tail flood light is mounted on the outboard underside of each horizontal stabilizer to illuminate each side of the vertical stabilizer. The tail flood lights are controlled by and the circuit is protected by a 7 1/2-ampere circuit-breaker switch placarded **TAIL FLOOD,** located on the pilot's subpanel (fig. 2-6).

i. Entry Light. A flush-mounted floodlight, located forward of the flap on the bottom surface of the left wing, provides illumination of the ramp area around the airstair door. The entry light is controlled by the threshold light switch which is located just inside the cabin door on the forward door frame. The entry light will extinguish automatically when the cabin door is closed.

2-70. INTERIOR LIGHTING.

a. Cockpit Lighting.

(1) Master pane/ lights switch. A switch placarded **MASTER PANEL LIGHTS, ON - OFF,** located on the overhead control panel (fig. 2-23) controls cockpit lighting.

(2) Overhead Flood lights. Two overhead flood lights are installed in the cockpit to provide overall illumination of the entire cockpit area. The lights are controlled by a rheostat switch placarded **OVERHEAD FLOOD LIGHTS, BRT - OFF,** located on the overhead control panel (fig. 2-23). The overhead flood lights circuit is protected by a 7 1/2-ampere circuit breaker placarded **SUB PNL, OVHD & CONSOLE,** located on the right sidewall circuit breaker panel (fig. 2-7).

(3) Instrument indirect lights. Indirect lighting to the instrument panel is provided by lights in the

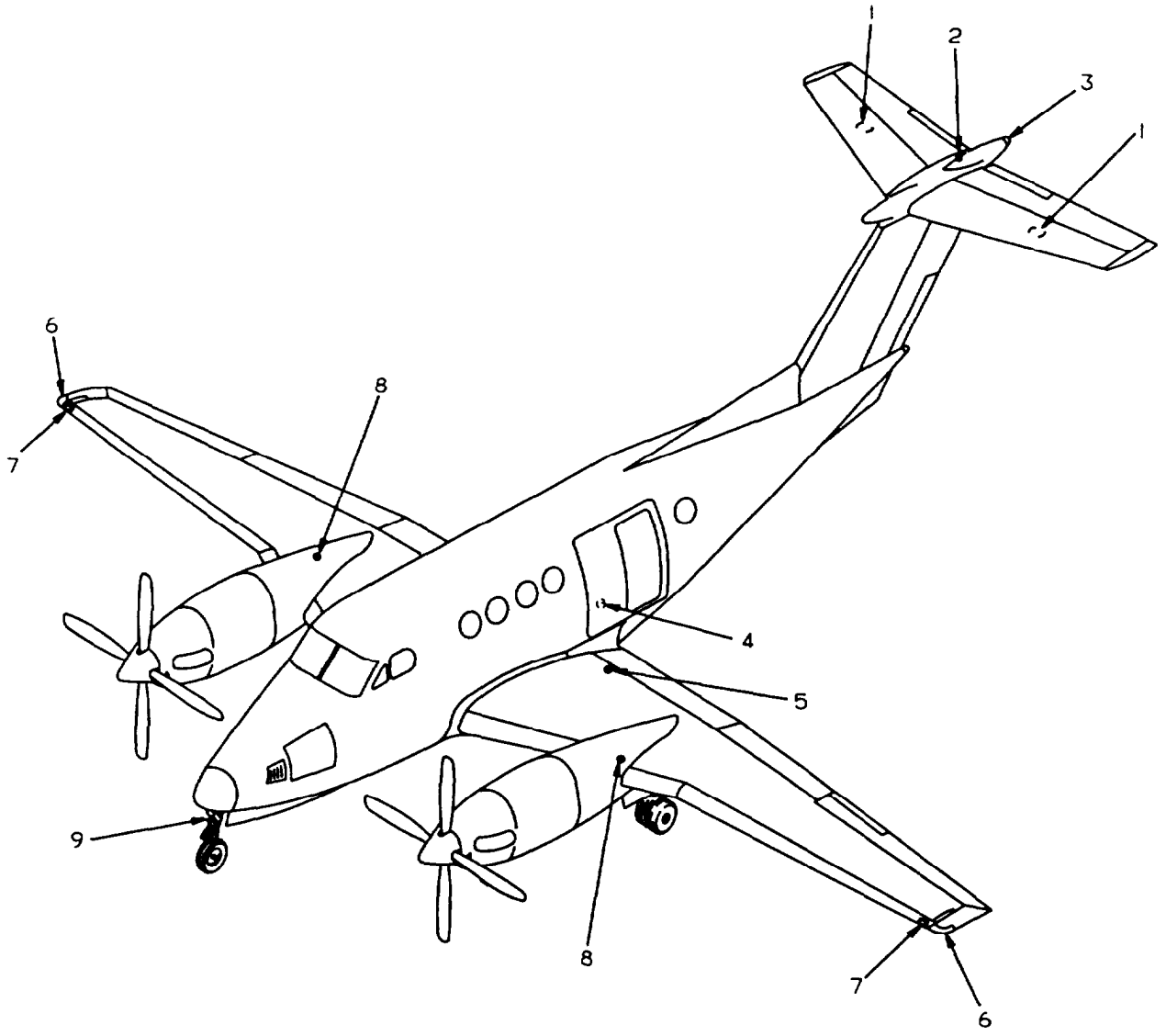

1. Tail Floodlight
2. Upper Strobe Beacon
3. Tail Navigation Light/Strobe Light
4. Lower Strobe Beacon
5. Entry Light
6. Wing Navigation Lights/Strobe Lights
7. Recognition Lights
8. Ice Lights
9. Landing/Taxi Lights

A958W02C0360 C

Figure 2-29. Exterior Lighting

glareshield. The instrument indirect lights are controlled by a rheostat switch placarded **INSTRUMENT INDIRECT LIGHTS, BRT - OFF,** located on the overhead control panel (fig. 2-23). The instrument indirect light circuit is protected by a 5-ampere circuit breaker placarded **INSTR INDIRECT,** located on the right sidewall circuit breaker panel (fig. 2-7).

(4) Pilot's flight instrument lights. Illumination of the pilot's flight instruments is controlled by a rheostat switch placarded **PILOT FLIGHT INSTRUMENT LIGHTS, BRT - OFF,** located on the overhead control panel (fig. 2-23). The pilot's flight instrument light circuit is protected by a 7.5-ampere circuit breaker placarded **COPLT FLT INSTR,** located on the right sidewall circuit breaker panel (fig. 2-7).

(5) Copilot's flight instrument lights. Illumination of the copilot's flight instruments is controlled by a rheostat switch placarded **COPILOT FLIGHT INSTRUMENT LIGHTS, BRT - OFF,** located on the overhead control panel (fig. 2-23). The copilot's flight instrument light circuit is protected by a 7.5-ampere circuit breaker placarded **COPLT FLT INSTR,** located on the right sidewall circuit breaker panel (fig. 2-7).

(6) Avionics pane/ lights. Illumination of the avionics panels is controlled by a rheostat switch placarded **AVIONICS PANEL LIGHTS, BRT - OFF,** located on the overhead control panel (fig. 2-23). The avionics panel light circuit is protected by a 5-ampere circuit breaker placarded **AVIONICS, & ENG INSTR,** located on the right sidewall circuit breaker panel (fig. 2-7).

(7) Engine instrument lights. Illumination of the engine instruments is controlled by a rheostat switch placarded **ENGINE INSTRUMENT LIGHTS, BRT - OFF,** located on the overhead control panel (fig. 2-23). The engine instrument light circuit is protected by a 5-ampere circuit breaker placarded **AVIONICS, & ENGINE INSTR,** located on the right sidewall circuit breaker panel (fig. 2-7).

(8) Overhead control panel, subpanels, and console lights. Illumination of the overhead control panel, subpanels, and console is controlled by a rheostat switch placarded **OVERHEAD SUBPANEL & CONSOLE LIGHTS, BRT - OFF,** located on the overhead control panel (fig. 2-23). The avionics panels and engine instrument light circuit is protected by a 7 1/2-ampere circuit breaker placarded **SUB PNL, OVHD & CONSOLE,** located on the right sidewall circuit breaker panel (fig. *2-7).*

(9) *Side pane/ lights.* Illumination of the side panels is controlled by a rheostat switch placarded SIDE **PANEL LIGHTS, BRT - OFF,** located on the overhead control panel (fig. 2-23). The avionics panels and engine instrument light circuit is protected by a 7 1/2-ampere circuit breaker placarded **PLT FLT, SIDE PNL,** located on the right sidewall circuit breaker panel (fig. 2-7).

b. Cabin Lighting.

(1) No smoking/fasten seat belt light. A switch placarded **NO SMOKE & FSB - OFF - FSB,** located on the copilot's subpanel controls the NO **SMOKING/FASTEN SEAT BELT** sign in the cabin. The circuit is protected by a lo-ampere circuit breaker placarded **NO SMK, FSB & CABIN,** located on the right sidewall circuit breaker panel (fig. 2-7).

(2) Threshold and aisle lights. A threshold light is installed just above floor level on the left side of the cabin, just inside the cabin door. An aisle light is installed at floor level immediately aft of the main spar cover. Both circuits are connected to the emergency battery bus. Both lights are controlled by a switch mounted adjacent to the threshold light. This switch also turns the exterior entry light on and off. If the lights are illuminated, closing the cabin door will automatically extinguish them.

(3) Cabin door latching mechanism light. A light is provided to check the cabin door latching mechanism. It is controlled by a red pushbutton switch located adjacent to the round observation window, which is just above the second step.

Section XI. FLIGHT INSTRUMENTS

2-71. PITOT SYSTEM.

The pitot system (fig. 2-30) provides ram air pressure for the airspeed indicators and air data computer. The pitot system consists of two pitot masts (one located on each side of the lower portion of the nose), and associated plumbing. The pitot masts are protected from ice formation by internal electric heating elements.

2-72. STATIC AIR SYSTEM.

a. Description. The static system (fig. 2-30) provides static air pressure for the pilot's and copilot's airspeed indicators, copilot's altimeter, air data computer, and pilot's and copilot's vertical speed indicators. The static air pressure ports are located on the right and left sides of the aft fuselage exterior skin.

b. Alternate Static Air Source. An alternate static air line, which terminates just aft of the rear pressure bulkhead, provides a source of static air for the pilot's instruments in the event of source failure from the pilot's static air line. A control on the right cockpit sidewall, placarded **PILOTS STATIC AIR SOURCE,** may be actuated to select either the **NORMAL** or **ALTERNATE** air source by a two position selector valve. The valve is secured in the **NORMAL** position by a spring clip.

2-73. TURN-AND-SLIP INDICATOR.

The pilot and copilot are each provided with a turn-and-slip indicator (fig. 2-31). The turn needle on these instruments indicate the direction and rate of turn. A one needle width deflection indicates a two-minute (180 degrees per minute) turn. Deflection of the inclinometer ball from the center of the inclinometer tube indicates that the aircraft is not in a coordinated turn (that it is either in a slipping or skidding turn, depending on direction of turn). These indicators are gyroscopically operated and electrically powered through two individual 5-ampere circuit breakers placarded **TURN & SLIP, PILOT,** and **COPLT,** located on the right sidewall circuit breaker panel (fig. 2-7).

a. Turn-and-Slip Indicator Controls, Indicators, and Functions.

(1) Gyro warning indicator. Presence indicates loss of electrical power to instrument.

(2) Rate of turn index. Used in conjunction with the rate of turn indicator needle to show direction and rate of turn.

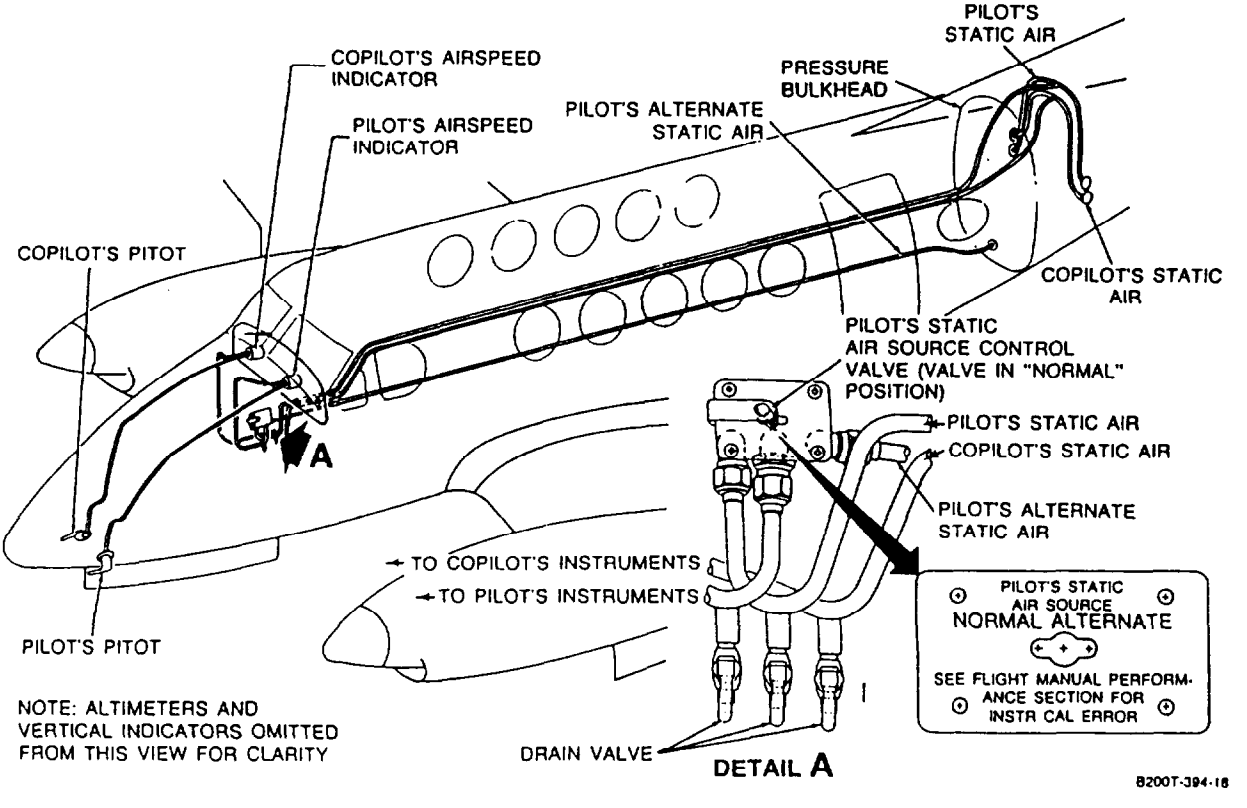

Figure 2-30. Pitot and Static System

(3) Rate of turn indicator needle. Deflection left or right indicates direction and rate of turn.

(4) Inclinometer. Deflection of the inclinometer ball from the center of the inclinometer tube indicates that the aircraft is in a slipping or skidding turn, depending on turn direction.

2-74. AIRSPEED INDICATORS.

Two identical airspeed indicators are installed separately on the pilot's and copilot's sides of the instrument panel (fig. 2-16). These indicators require no electrical power for operation. The indicator dials are calibrated in knots from 40 to 300. A striped pointer automatically displays the maximum allowable airspeed at a given aircraft altitude.

2-75. STANDBY BAROMETRIC ALTIMETER.

a. Description. The standby barometric altimeter (fig. 2-32) provides an indication of the aircraft's pressure altitude above sea level.

b. Controls, Indicators, and Functions.

(1) Altitude scale. Used in conjunction with altitude indicator needle to indicate aircraft altitude in hundreds of feet, subdivided into 20 foot increments.

(2) Counter-drum altitude display. Indicates aircraft altitude in tens of thousands, thousands, and hundreds *of feet above sea level.*

(3) Altitude indicator needle. Used in conjunction with altitude scale to display aircraft altitude in hundreds of feet.

(4) Barometric pressure setting knob. Used to manually set barometric pressure displayed in the IN HG display.

(5) Barometric pressure display (Inches of mercury). Indicates the barometric pressure in inches of mercury that has been set by the barometric pressure setting knob.

NOTE

If the altimeter does not read within 70 feet of field elevation, when the correct local barometric setting is used, the altimeter needs calibration or internal failure has occurred. An error of greater than 70 feet also nullifies use of the altimeter for IFR flight.

2-76. STANDBY ATTITUDE INDICATOR.

An electrically operated standby attitude indicator (fig. 2-33), with a backup battery system is located on the

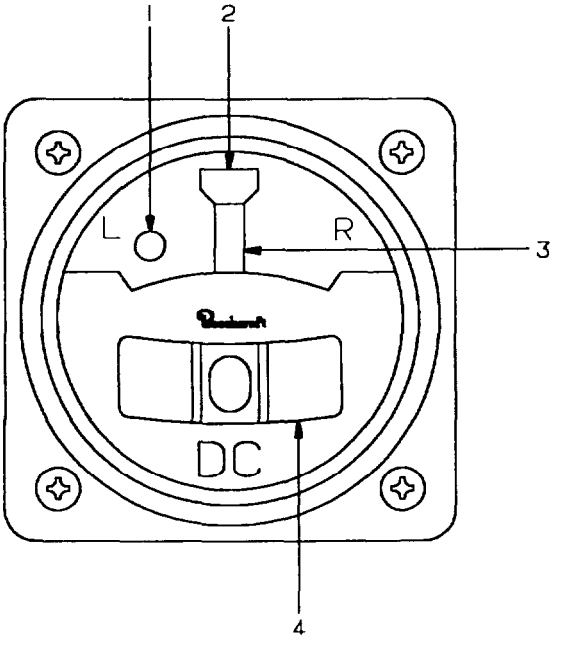

1. Gyro Warning Indicator
2. Rate of Turn Index
3. Rate of Turn Indicator Needle
4. Inclinometer

A95BW02C0443 C

Figure 2-31. Turn-and-Slip Indicator

pilot's instrument panel (fig. 2-16). The backup battery is located on the bottom shelf on the copilot's side of the nose compartment, and is charged from the aircraft NO.3 AVIONICS BUS. Backup battery protection is provided by a 15 amp circuit breaker, placarded **STBY HORIZON BAT,** and the standby attitude indicator is protected by a 2 amp circuit breaker placarded **STBY HORIZON IND.** Both circuit breakers are located on the right sidewall circuit breaker panel. The standby attitude indicator is capable of providing accurate attitude indications for up to 30 minutes with the backup battery following a total aircraft electrical system failure.

a. Standby Attitude Indicator Controls, Indicators, and Functions.

(1) Bank angle scale. Used in conjunction with bank angle pointer to indicate aircraft bank angle.

(2) Bank angle index. Rotates with aircraft to provide measurement of angular displacement by roll pointer during maneuvers.

(3) Bank angle pointer. The moveable bank angle pointer indicates aircraft bank angle by moving around a fixed bank angle scale.

(4) Pitch angle scale. Aircraft pitch angle may be read under the symbolic miniature aircraft on a vertical pitch angle scale located on the attitude drum.

(5) Horizon line. The horizon line displays aircraft pitch and roll attitude with respect to the earth's horizon.

(6) Caging and pitch trim adjustment knob. This knob, placarded **PULL TO CAGE,** is used to vertically adjust the symbolic miniature aircraft for changes in the aircraft's level flight pitch attitude and to cage the instrument. Caging the instrument is accomplished by pulling out the knob.

(7) Pitch trim pointer. Indicates amount of vertical *trim displacement applied to miniature aircraft.*

(8) Pitch trim scale. Provides a means of measuring the amount of vertical trim displacement applied to the miniature aircraft.

(9) Miniature symbolic aircraft. Aircraft pitch and roll attitudes are displayed by the relationship between the fixed miniature aircraft symbol and the movable attitude sphere.

(10) Drum. The drum is directly linked to the gyro to provide a direct measurement of aircraft movement around the pitch and roll axes.

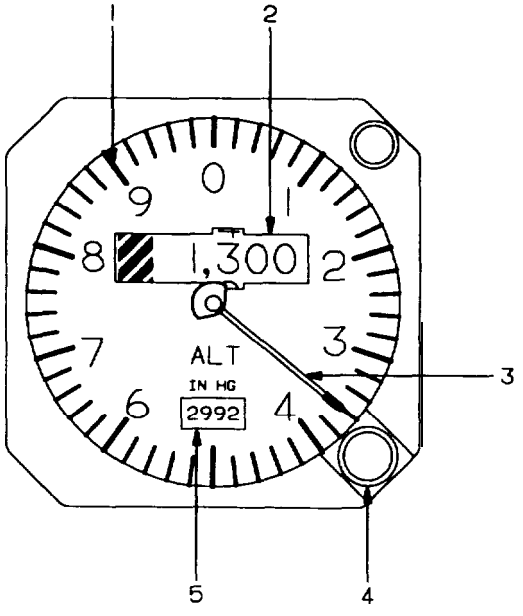

1. Altitude Scale
2. Counter-Drum Altitude Display
3. Altitude Indicator Needle
4. Barometer Pressure Setting Knob
5. Barometer Pressure Display (Inches of Mercury)

A95BW02C0444 C

Figure 2-32. Standby Barometric Altimeter

(11) Power warning flag. Presence of the power warning flag indicates no power to the unit, a caged condition, or open gyro motor winding.

b. Standby Attitude Indicator Backup Battery Power System Controls, Indicators, and Functions. The controls and indicators for the standby attitude indicator backup battery power system are located on the audio control panel (fig. 3-1).

(1) Standby horizon power warning horn silence switch. The standby horizon power warning horn may be silenced by depressing a pushbutton switch placarded **HORN SILENCE.**

(2) Standby horizon power control switch. The standby horizon power system is controlled by a switch placarded **ON - OFF - TEST.**

(3) Standby horizon power annunciator. The standby horizon power system annunciator, placarded **AUX ARM - AUX ON - AUX TEST,** is used to monitor functional state of the system.

2-77. FREE AIR TEMPERATURE (FAT) GAGE.

A digital free air temperature gage is located on the left cockpit sidewall. Temperature is normally displayed in degrees Celsius, but depressing a pushbutton switch placarded **PUSH FOR °F** will change the display to degrees Fahrenheit.

2-78. STANDBY MAGNETIC COMPASS.

WARNING

Inaccurate indications on the standby magnetic compass will occur while windshield heat, air conditioning, or EFIS are being used or the sunvisors are in the front position.

The standby magnetic compass, located below the overhead control panel (fig. 2-23), is used in the event of failure of the compass system, and for instrument cross check. Readings should be taken only during level flight since errors may be introduced by turning or acceleration. A compass correction chart, indicating deviation factors, is located on the magnetic compass.

2-79. MISCELLANEOUS INSTRUMENTS.

a. Warning Annunciator Panel. The warning annunciator panel (fig. 2-34), located near the center of the instrument panel in the glareshield (fig. 2-16), contains red

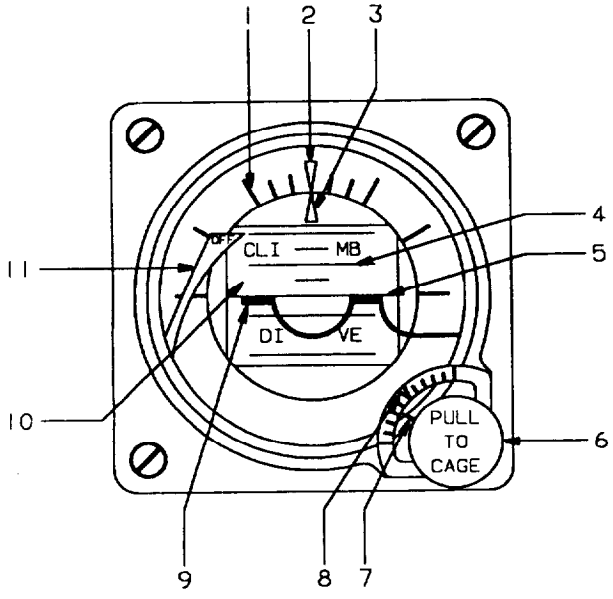

1. Bank Angle Scale
2. Bank Angle Index
3. Bank Angle Pointer
4. Pitch Angle Scale
5. Horizon Line
6. Caging and Pitch Trim Knob
7. Pitch Trim Pointer
8. Pitch Trim Scale
9. Miniature Symbolic Aircraft
10. Drum
11. Power Warning Flag

A95BW02C0446 C

Figure 2-33. Standby Attitude Indicator

fault annunciators. Illumination of a red fault annunciator signifies the existence of a hazardous condition requiring pilot attention. Table 2-6 lists the red fault annunciators, and the causes for their illumination.

b. Caution/Advisory Annunciator Panel. The caution/advisory annunciator panel (fig. 2-35), located on the center subpanel (fig. 2-6), contains the caution/advisory annunciators. The amber caution annunciators signify a condition requiring pilot attention. A green advisory annunciator indicates a functional condition. Table 2-7 lists the caution/advisory annunciators and causes for illumination.

c. Annunciator System - General. In the frontal view, the annunciator panels present rows of small opaque rectangular annunciators. Word printing on the respective indicator identifies the monitored function, situation, or fault condition, but it cannot be read until the annunciator is illuminated. Blank annunciators (no word printing) are non-functioning annunciators. The bulbs of all annunciator panels are tested by depressing the annunciator test push-button switch, placarded **PRESS TO TEST,** located on the instrument panel on the right side of the warning annunciator panel. The system is protected by a 7 1/2-ampere circuit breaker placarded **ANN POWER** and a 5-ampere circuit breaker placarded **ANN IND,** located on the right sidewall circuit breaker panel (fig. 2-7). The annunciators are dimmed when the **MASTER** light switch is **ON** and the pilot's flight instrument lights are illuminated. The annunciators are automatically reset to maximum brightness if:

(1) Annunciator bright and dim mode. The warning and caution annunciator panels and the master warning and master caution annunciators feature a bright and dim mode of operation. The dim mode will be selected automatically whenever all the following conditions have been met.

A generator is on line

Overhead flood lights are off

Pilot flight instrument lights are on

The ambient light intensity in the cockpit (as sensed by a photocell located on the overhead control panel) is below a preset value.

Unless all of these conditions are met, the bright mode will be selected automatically.

d. Master Warning Annunciators (red). Two **MASTER WARNING** annunciators, one located on each

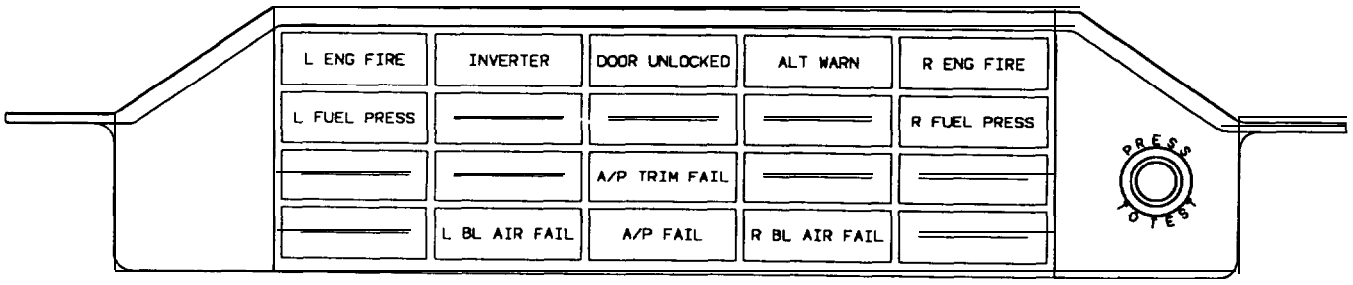

A95BW02C0442 C

Figure 2-34. Warning Annunciator Panel

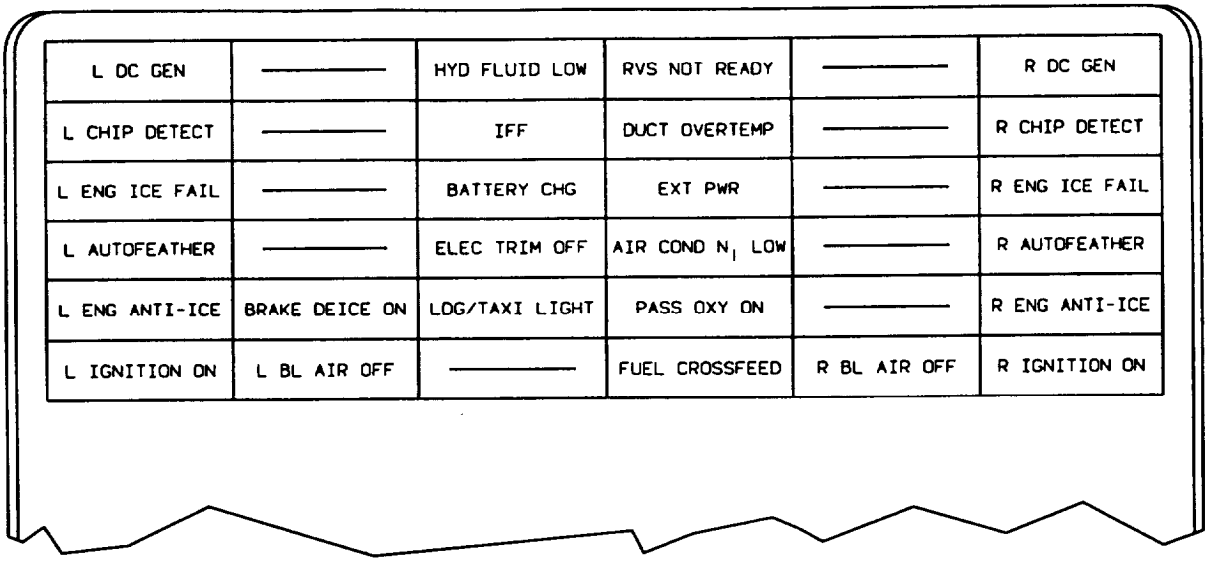

Figure 2-35. Caution/Advisory Annunciator Panel

Table 2-6. Warning Annunciator Panel Legend

WARNING ANNUNCIATOR		
NOMENCLATURE	**COLOR**	**CAUSE FOR ILLUMINATION**
L ENG FIRE	RED	Left engine fire detected
INVERTER	RED	Inverter inoperative
DOOR UNLOCKED	RED	Cabin/cargo door open or not secure
ALT WARN	RED	Cabin altitude exceeds 12,500 feet
R ENG FIRE	RED	Right engine fire detected
L FUEL PRESS	RED	Fuel pressure failure on left side
R FUEL PRESS	RED	Fuel pressure failure on right side
A/P TRIM FAIL	RED	Autopilot trim failed
L BL AIR FAIL	RED	Left bleed air warning line has melted or failed, indicating possible leak of left engine bleed air
A/P FAIL	RED	Autopilot has failed
R BL AIR FAIL	RED	Right bleed air warning line has melted or failed, indicating possible leak of right engine bleed air

BTO5516

side of the glareshield (fig. 2-16), are provided to alert the crew of a hazardous condition. Any time a warning annunciator illuminates, the **MASTER WARNING** annunciators will flash, and will remain flashing until reset. If a new condition occurs, the annunciators will be reactivated, and the applicable annunciator panel annunciator(s) will illuminate.

e. Master Caution Annunciators (amber). Two **MASTER CAUTION** annunciators, one located on each side of the glareshield adjacent to the **MASTER WARNING** annunciator (fig. 2-16), are provided to alert the crew of a situation requiring the crew's attention. Whenever a caution annunciator illuminates, the **MASTER CAUTION** annunciators will flash, and remain flashing until the **MASTER CAUTION** annunciator is reset. If a new condition occurs, the annunciators will be reactivated and the appropriate annunciator(s) will illuminate.

f. Clocks.

(1) Description. A digital quartz chronometer is mounted in the center of each control wheel (fig. 2-21). Each quartz chronometer is a three-function clock/timer that is controlled by two pushbutton switches, placarded **SELECT** and **CONTROL,** located directly below the four-digit liquid crystal display.

(2) Operation. The **SELECT** button is pressed to select the desired mode of operation. The mode annunciator is displayed on the left side of the mode identifiers, and advances to indicate each of the following modes:

UT - Universal or Greenwich Mean Time

LC - Local Time

ET - Elapsed Time

Table 2-7. Caution/Advisory Annunciator Panel Legend

CAUTION/ADVISORY ANNUNCIATOR		
NOMENCLATURE	**COLOR**	**CAUSE FOR ILLUMINATION**
L DC GEN	Yellow	Left engine generator off the line
HYD FLUID LOW	Yellow	Fluid level in power pack is low
RVS NOT READY	Yellow	Propeller levers are not in the high RPM, low pitch position, with the landing gear extended
R DC GEN	Yellow	Right engine generator off the line
L CHIP DETECT	Yellow	Contamination of left engine oil detected
IFF	Yellow	Transponder fails to reply to a valid mode 4 interrogation
DUCT OVERTEMP	Yellow	Excessive bleed air temperature in environmental heat ducts
R CHIP DETECT	Yellow	Contamination of right engine oil detected
L ENG ICE FAIL	Yellow	Left engine ice vane malfunction. Ice vane has not attained proper position.
BATTERY CHG	Yellow	Charge rate on battery exceeds 7 amps
EXT PWR	Yellow	External power connector plugged in
R ENG ICE FAIL	Yellow	Right engine ice vane malfunction. Ice vane has not attained proper position
L AUTOFEATHER	Green	Left autofeather armed
ELEC TRIM OFF	Green	Electric trim switch has been turned off
AIR COND N_1, LOW	Green	Right engine RPM too low for air conditioning load
R AUTOFEATHER	Green	Right autofeather armed
L ENG ANTI-ICE	Green	Left ice vane extended
BRAKE DEICE ON	Green	Brake deicing system is on
LDG/TAXI LIGHT	Green	Landing/taxi light is on
PASS OXY ON	Green	Passenger oxygen system is operating
R ENG ANTI-ICE	Green	Right ice vane extended
L IGNITION ON	Green	Left engine ignition/start switch on, left engine autoignition switch armed and engine torque below 20 percent
L BL AIR OFF	Green	Left environmental bleed air valve closed
FUEL CROSSFEED	Green	Crossfeed valve open
R BL AIR OFF	Green	Right environmental bleed air valve closed
R IGNITION ON	Green	Right engine ignition/start switch on, right engine autoignition switch armed and engine torque below 20 percent

BT05515

Section XII. SERVICING, PARKING, AND MOORING

2-80. GENERAL.

The following paragraphs include the procedures necessary to service the aircraft except lubrication. The lubrication requirements of the aircraft are covered in the aircraft maintenance manual. Tables 2-8, 2-9, 2-10, and 2-11 are used for identification of fuel, oil, etc. used to service the aircraft. The servicing instructions provide procedures and precautions necessary to service the aircraft. Figure 2-36 shows servicing location points.

2-81. FUEL HANDLING PRECAUTIONS.

Table 2-2, Usable Fuel Quantity Data, lists the capacity of the fuel tanks in the aircraft. Service the fuel tanks after each flight to keep moisture out of the tanks and to keep the bladder type cells from drying out.

WARNING

During warm weather, open fuel caps slowly to prevent being sprayed with fuel.

Care should be taken to prevent cuts or abrasions while inspecting the exhaust or turbine area of engines that have been operated on aviation gasoline. The exhaust deposits can cause lead poisoning.

CAUTION

Proper procedures for handling aircraft fuels cannot be over stressed. Clean, fresh fuel shall be used and the entrance of water into the fuel storage or aircraft fuel system must be kept to a minimum.

When conditions permit, the aircraft shall be positioned so that the wind will carry the fuel vapors away from all possible sources of ignition. The fueling vehicle shall be positioned to maintain a minimum distance of 10 feet from any part of the aircraft, while maintaining a minimum distance of 20 feet between the fueling vehicle and the fuel filler point.

a. Shut off unnecessary electrical equipment in the aircraft, including radar and radar equipment. The master switch may be left on to monitor fuel quantity gages, but shall not be moved during the fueling operation. Do not allow operation of any electrical tools, such as drills or buffers, in or near the aircraft during fueling.

b. Keep fuel servicing nozzles free of snow, water, and mud at all times.

c. Carefully remove snow, water, and ice from the aircraft fuel filler cap area before removing the filler cap (fig. 2-36). Remove only one aircraft tank filler cap at any one time, and replace each one immediately after the servicing operation is completed.

d. Wipe all frost from fuel filler necks before servicing the aircraft.

e. Drain water from fuel tanks, filter cases, and pumps prior to first flight of the day. Preheat, when required, to ensure free fuel drainage.

f. Avoid dragging the fueling hose where it can damage the soft, flexible surface of the deice boots.

g. Observe **NO SMOKING** precautions.

h. Prior to transferring fuel, ensure that the hose is grounded to the aircraft.

i. Wash off spilled fuel immediately.

j. Handle the fuel hose and nozzle cautiously to avoid damaging the wing skin.

k. Do not conduct fueling operations within 100 feet of energized airborne radar equipment or within 300 feet of energized ground radar equipment installations.

Table 2-8. Approved Military Fuels, Oils, Fluids and Unit Capacities

SYSTEM	SPECIFICATION	CAPACITY
Fuel	MIL-T-83133 (JP-8)	544 U.S. Gals. Usable
Engine Oil	MIL-L-23699	14 U.S. Quarts per engine
Hydraulic Brake System	MIL-H-5606	1 U.S. Pint
Hydraulic Landing Gear Reservoir	MIL-H-5606	8 U.S. Quarts
Oxygen System	MIL-O-27210	77 Cubic Feet
Toilet Chemical	Monogram DG-19	3 Ounces

BT05823

Table 2-9. Approved Fuels

SOURCE	PRIMARY OR STANDARD FUEL	ALTERNATE FUEL	
US MILITARY FUEL NATO Code No.	JP-8 (MIL-T-83133) NATO F-34	JP-5 (MIL-T-5624) NATO F-44 (High Flash Type)	JP-4 (MIL-T-5624) NATO F-40 (Wide Cut Type)
COMMERCIAL FUEL [ASTM-D-1655)	JET A-1	JET A	JET B
American Oil Co.	American Jet Fuel Type A-1	American Jet Fuel Type A	
Atlantic Refining Co.	Arcojet A-1	Arcojet A	Arcojet B
B.P. Trading Co.	BP A.T.K.		BP A.T.G.
Caltex Petroleum Corp.	Caltex Jet A-1		Caltex Jet-B
Cities Service Co.		Turbine Type A	
Continental Oil Co.	Conoco Jet-60	Conoco Jet-50	Conoco Jet JP-4
EXXON Co. USA	EXXON Turbo Fuel 1-A	EXXON Turbo Fuel A	EXXON Turbo Fuel 4
Gulf Oil	Gulf Jet A-1	Gulf Jet A	Gulf Jet B
Mobil Oil	Mobil Jet A-1	Mobil Jet A	Mobil Jet B
Phillips Petroleum		Philjet A-50	Philjet JP-4
Pure Oil Co.	Purejet Turbine Fuel Type A-1	Purejet Turbine Fuel Type A	
Richfield Oil Co.	Richfield Turbine Fuel A-1	Richfield Turbine Fuel A	
Shell Oil	Aeroshell Turbine Fuel 650	Aeroshell Turbine Fuel 640	Aeroshell Turbine Fuel JP-4
Sinclair	Superjet Fuel A-1	Superjet Fuel A	
Standard Oil Co. of California	Chevron TF-1		Chevron JP-4
Standard Oil Co. of Ohio	Jet A-1 Kerosene	Jet A Kerosene	
Standard Oil Co. of Kentucky	Standard JF A-1	Standard JF A	Standard JF B
Texaco	Avjet K-58	Avjet K-40	Avjet JP-4
Union Oil	76 Turbine Fuel		Union JP-4
FOREIGN FUEL		NATO F-44	NATO F-40
Belgium			BA-PF-2B
Canada	CAN/CGSB 3.23/Jet A-1	3-6P-24e	3GP-22F
Denmark			JP-4 MIL-T-5624
France			AIR 3407A
Germany		UTL-9130-007/UTL9130-010	VTL-9130-006
Greece			JP-4 MIL-T-5624
Italy		AMC-143	AA-M-C-1421
Netherlands		D. Eng RD 2493	JP-4 MIL-T-5624
Norway			JP-4 MIL-T-5624
Portugal			JP-4 MIL-T-5624
Turkey			JP-4 MIL-T-5624
United Kingdom (Britain)	D. Eng RD 2494	D. Eng RD 2498	D. Eng RD 2454

NOTE

Anti-icing and Biocidal Additive for Commercial Turbine Engine Fuel - The fuel system icing inhibitor shall conform to MIL-L-27686. The additive provides anti-icing protection and also functions as a biocide to kill microbial growths in aircraft fuel systems. Icing inhibitor conforming to MIL-L-27686 shall be added to commercial fuel, not containing an icing inhibitor, during refueling operations, regardless of ambient temperatures. Refueling operations shall be accomplished in accordance with accepted procedures.

BT05517

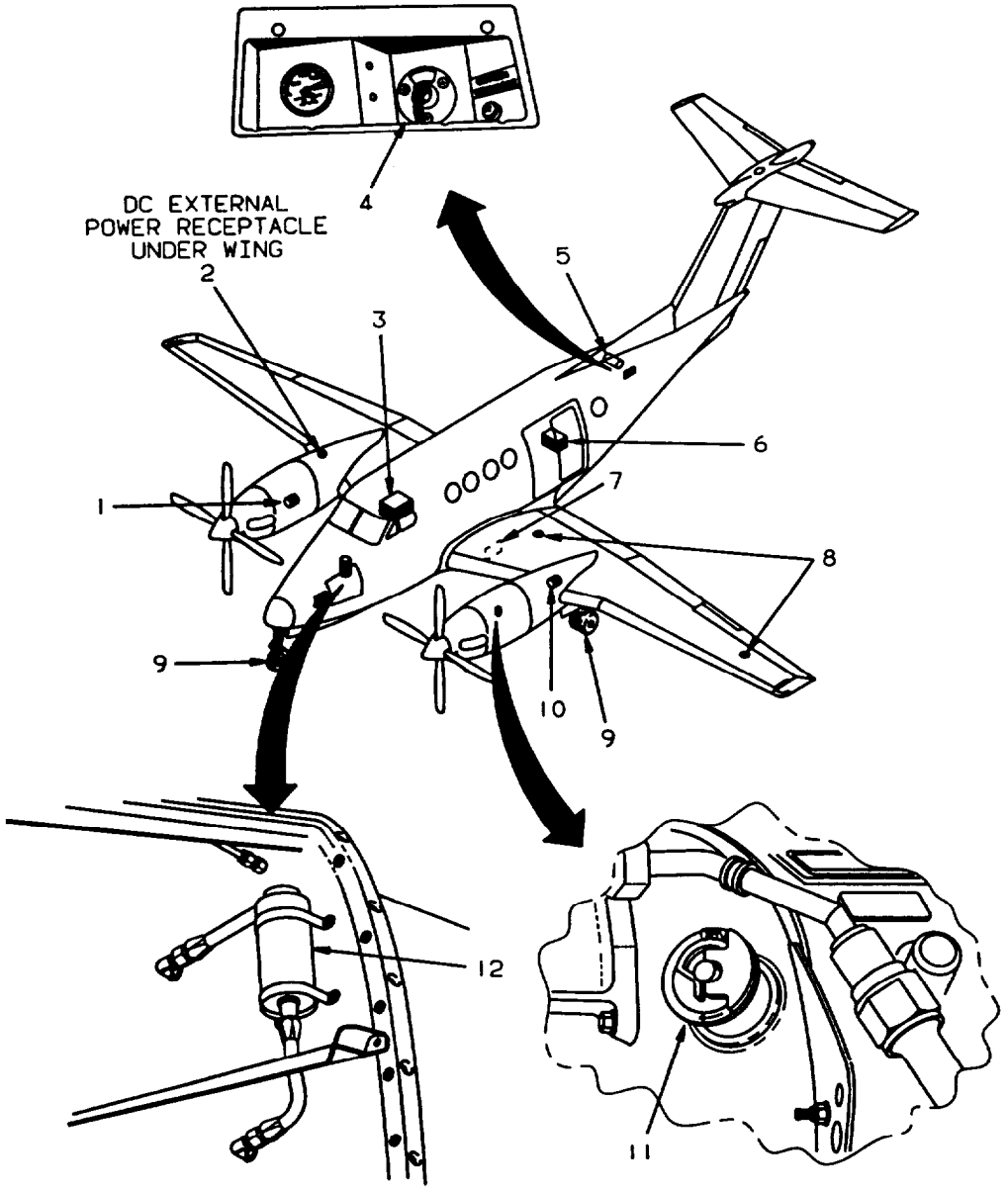

1. Air Conditioning Compressor
2. DC External Power Receptacle
3. Battery 24 VDC
4. Oxygen System Filler
5. Oxygen Cylinder (77 CU Ft Bottle)
6. Chemical Toilet
7. Landing Gear Hydraulic Reservoir
8. Fuel Filler Caps (Typical Left and Right)
9. Landing Gear Tires (Typical Left, Right, and Nose Gear)
10. Engine Fire Extinguisher (Typical Left and Right)
11. Engine Oil Filler Cap (Typical Left and Right)
12. Wheel Brake Fluid Reservoir

A958W02C0361 C

Figure 2-36. Servicing Locations

l. Wear only nonsparking shoes near aircraft or fueling equipment, as shoes with nailed soles or metal heel plates can be a source of sparks.

WARNING

Prior to removing the fuel tank filler cap, the hose nozzle static ground wire shall be attached to the grounding sockets located adjacent to the filler opening.

2-82. FILLING FUEL TANKS.

Fill tanks as follows:

1. Attach bonding cables to aircraft.
2. Attach bonding cable from hose nozzle to ground socket adjacent to fuel tank being filled.

CAUTION

Do not insert fuel nozzle completely into fuel cell due to possible damage to bottom of fuel cell. Nozzle should be supported and inserted straight down to prevent damage to the anti-siphon valve.

3. Remove fuel tank filler cap and fill main tank before filling corresponding auxiliary tanks.
4. Secure applicable fuel tank filler cap. Make sure latch tab on cap is pointed aft.
5. Disconnect bonding cables from aircraft.

2-83. DRAINING MOISTURE FROM FUEL SYSTEM.

Twelve (12) fuel drains are installed (plus two drains for the ferry fuel system, when installed) to remove sediment from the fuel system.

2-84. FUEL TYPES.

Approved fuel types are as follows:

a. Army Standard Fuels. Army standard fuel is JP-8.

b. Alternate Fuels. Army alternate fuels are JP-4 and JP-5.

c. Emergency Fuel. Avgas is an emergency fuel and subject to a 150 hour time limit.

2-85. USE OF FUELS.

Fuel is used as follows:

a. Fuel limitations. Fuel limitations are outlined in Chapter 5. For the purpose of recording, fuel mixtures shall be identified as to the major component of the mixture, except when the mixture contains leaded gasoline. The use of any fuels other than standard will be entered in the **FAULTS/REMARKS** column of DA Form 2408-13, Aircraft Maintenance and Inspection Record, noting the type of fuel, additives, and duration of operation.

b. Use of Kerosene Fuels. The use of kerosene fuels (JP-5 type) in turbine engines dictates the need for observance of special precautions. Both ground starts and air restarts at low temperature may be more difficult due to low vapor pressure. Kerosene fuels having a freezing point of -40°C (-40°F), limit the maximum altitude of a mission to 28,000 feet under standard day conditions.

c. Mixing of Fuels in Aircraft Tanks. When changing from one type of authorized fuel to another, for example JP-8 to JP-5, it is not necessary to drain the aircraft fuel system before adding the new fuel.

d. Fuel Specifications. Fuels having the same NATO code number are interchangeable. Jet fuels conforming to ASTM D-1655 specification may be used when MIL-T-83133 fuels are not available. This usually occurs during cross-country flights where aircraft using NATO F-34 (JP-8) are refueling with NATO F-40 (JP-4) or commercial ASTM type B fuels. Whenever this condition occurs, the engine operating characteristics may change in that lower operating temperature, slower acceleration, lower engine speed, easier starting, and shorter range may

Table 2-10. Standard Alternate, and Emergency Fuels

ENGINE	ARMY STANDARD FUEL	ALTERNATE TYPE	EMERGENCY FUEL	
			TYPE	*MAX HOURS
PT6A	MIL-T-83133 Grade JP-8	MIL-T-5624 Grade JP-4/5 MIL-T-5624 Grade JP-4	MIL-G-5572 Any AV Gas	150
*Maximum operating hours with indicated fuel between engine overhauls (TBO).				

BTO3859

be experienced. The reverse is true when changing from F-40 (JP-4) fuel to F-34 (JP-8) or Commercial ASTM Type A-l fuels. Most commercial turbine engines will operate satisfactorily on either kerosene or JP-4 type fuel. The difference in specific gravity may possibly require fuel control adjustments; if so, the recommendations of the manufacturers of the engine and airframe are to be followed.

2-86. SERVICING OIL SYSTEM.

An integral oil tank occupies the cavity formed between the accessory gearbox housing and the compressor inlet case on the engine. The tank has a calibrated oil dipstick and an oil drain plug. Avoid spilling oil. Any oil spilled must be removed immediately. Use a cloth moistened in solvent to remove oil. Overfilling may cause a discharge of oil through the accessory gearbox breather during engine operation, until a satisfactory level is reached. Service oil system as follows:

1. Open access door on upper cowling to gain access to oil filler cap and dipstick.

CAUTION

A cold oil check is unreliable. If possible, check oil within 10 minutes after engine shutdown. If over 10 minutes have elapsed, motor the engine for 40 seconds, then check. If over 10 hours have elapsed, start the engine and run for 2 minutes, then check. Add oil as required. Do not overfill.

2. If oil level is over 2 quarts low, motor or run engine as required, and service as necessary.
3. Remove oil filler cap.
4. Insert clean funnel, with screen incorporated, into filler neck.
5. Replenish with oil to within 1 quart below **MAX** mark or **MAX COLD** on dipstick (cold engine). Fill to **MAX** or **MAX HOT** (hot engine).
6. Check oil filler cap for damaged preformed packing, general condition and locking.

CAUTION

Ensure that oil filler cap is correctly installed and securely locked to prevent loss of oil and possible engine failure.

7. Install and secure oil filler cap.
8. Check for any oil leaks.

2-87. SERVICING THE HYDRAULIC SYSTEM.

a. Servicing Hydraulic Brake System Reservoir.

1. Gain access to brake hydraulic system reservoir.
2. Remove brake reservoir cap and fill reservoir to washer on dipstick with hydraulic fluid.
3. Install brake reservoir cap.

b. Servicing Hydraulic Landing Gear System. Servicing the hydraulic landing gear extension/ retraction system consists of maintaining the correct fluid level and maintaining the correct accumulator precharge. The accumulator is located in the reservoir access area and is charged to 800 ±50 PSI using bottled nitrogen. A charging gage is mounted on the accumulator. A reservoir, located just inboard of the left nacelle and forward of the main spar, has a lid with a dipstick attached marked **FLUID TEMP 0°F, 50°F, 100°F.** Add MIL-H-5606 hydraulic fluid (consumable materials list) as required to fill the system, corrected for temperature.

2-88. INFLATING TIRES.

Inflate nose wheel tires to a pressure between 55 and 60 PSI. Inflate main wheel tires to a pressure between 60 and 64 PSI.

2-89. SERVICING THE CHEMICAL TOILET.

The toilet should be serviced during routine ground maintenance of the aircraft following every usage. The waste storage container should be removed, emptied, its disposable plastic liner replaced, and the container replaced in the toilet cabinet, Toilet paper, waste container plastic liners, and dry chemical deodorant packets should also be resupplied within the toilet cabinet as needed.

2-90. SERVICING THE AIR CONDITIONING SYSTEM.

Servicing the air conditioning system consists of checking and maintaining the correct refrigerant level, compressor oil level, belt tension and condition, system leak detection, and replacement of the evaporator air filters. It is imperative that maintenance of the air conditioning system, except for filter replacement, be accomplished only by qualified refrigerant system technicians.

2-91. ANTI-ICING, DEICING, AND DEFROSTING TREATMENT.

NOTE

Do not apply anti-icing, deicing, and defrosting fluid to exposed aircraft surfaces if snow is expected. Melting snow will dilute the defrosting fluid and form a slush mixture which will freeze in place and become difficult to remove.

Use undiluted anti-icing, deicing, and defrosting fluid (MIL-A-8243) to treat aircraft surfaces for protection against freezing rain and frost. Spray aircraft surface sufficiently to wet area, but without excessive drainage. A fine spray is recommended to prevent waste.

Use diluted, hot fluid as follows to remove ice accumulations:

1. Remove frost or ice accumulations from aircraft surfaces by spraying with diluted anti-icing, deicing, and defrosting fluid mixed in accordance with table 2-12.
2. Spray diluted, hot fluid in a solid stream (not over 15 gallons per minute). Thoroughly saturate aircraft surface and remove loose ice. Keep a sufficient quantity of diluted, hot fluid on aircraft surface coated with ice, to prevent liquid layer from freezing. Diluted, hot fluid should be sprayed at a high pressure, but not exceeding 300 PSI.
3. When facilities for heating are not available and it is deemed necessary to remove ice accumulations from aircraft surfaces, undiluted defrosting fluid may be used. Spray undiluted defrosting fluid at 15 minute intervals to assure complete coverage. Removal of ice accumulations using undiluted defrosting fluid is expensive and slow.

If tires are frozen to ground, use undiluted defrosting fluid to melt ice around tire. Move aircraft as soon as tires are free.

2-92. APPLICATION OF EXTERNAL POWER.

CAUTION

Before connecting the power cables from the external power source to the aircraft, ensure that the GPU is not touching the aircraft at any point. Due to the voltage drop in the cables, the two ground systems will be of different potentials. Should they come in contact while the GPU is operating, arcing could occur. Turn off all external power while connecting the power cable to, or removing it from, the external power supply receptacle. Be certain that polarity of the external power source is the same as that of the aircraft before it is connected. Minimum GPU requirements are: 400-amperes, 28V continuous output DC.

An external power source is often needed to supply the electric current required to properly ground service the aircraft electrical equipment and to facilitate starting the aircraft's engines. An external DC power receptacle is installed on the underside of the right wing, just outboard of the engine nacelle.

2-93. SERVICING OXYGEN SYSTEM.

The oxygen system furnishes emergency breathing oxygen to the pilot, copilot, passengers, and first aid position. Oxygen cylinder location is shown in figure 2-24.

Table 2-11. Recommended Fluid Dilution Chart

AMBIENT TEMPERATURE (°F)	PERCENT DEFROSTING FLUID BY VOLUME	PERCENT WATER BY VOLUME	FREEZING POINT OF MIXTURE (“F) (APPROXIMATE)
30° and above	20	80	10º
20º	30	70	0º
10º	40	60	-15º
0º	45	55	-25º
-10º	50	50	-35º
-20º	55	45	-45º
-30º	60	40	-55º

1. Use anti-icing and deicing fluid (MIL-A-8243 or commercial fluids).
2. Heat Mixture to a temperature of 82º to 93°C (180” to 200°F).

BT00201

a. Oxygen System Safety Precautions.

WARNING

Keep fire and heat away from oxygen equipment. Do not smoke while working with or near oxygen equipment, and take care not to generate sparks with carelessly handled tools when working on the oxygen system.

1. Keep oxygen regulators, cylinders, gages, valves, fittings, masks, and all other components of the oxygen system free of oil, grease, gasoline, and all other readily combustible substances. The utmost care shall be exercised in servicing, handling, and inspecting the oxygen system.
2. Do not allow foreign matter to enter oxygen lines.
3. Never allow electrical equipment to come into contact with the oxygen cylinder.
4. Never use oxygen from a cylinder without first reducing its pressure through a regulator.

b. Replenishing Oxygen System.

1. Remove oxygen access door on outside of aircraft (fig. 2-24).
2. Remove protective cap on oxygen system filler valve.
3. Attach oxygen hose from oxygen servicing unit to filler valve.

WARNING

If the oxygen system pressure is below 200 PSI, do not attempt to service system. Make an entry on DA Form 2408-13.

4. Ensure that supply cylinder shutoff valves on aircraft are open.
5. Slowly adjust valve position so that pressure increases at a rate not to exceed 200 PSIG per minute.
6. Close pressure regulating valve on oxygen servicing unit when pressure gage on oxygen system indicates pressure obtained using the Oxygen System Servicing Pressure Chart (fig. 2-37).

NOTE

To compensate for loss of aircraft cylinder pressure as the oxygen cools to ambient temperature after recharging, the cylinder should be charged initially to approximately 10% over prescribed pressure. Experience will determine what initial pressure should be used to compensate for the subsequent pressure loss upon cooling. A complete recharge will create substantial heating.

7. Adjust the final stabilized cylinder pressure for ambient temperature per figure 2-37.
8. Disconnect oxygen hose from oxygen servicing unit and filler valve.
9. Install protective cap on oxygen filler valve.
10. Install oxygen access door.

2-94. GROUND HANDLING.

Ground handling covers all the essential information concerning movement and handling of the aircraft while on the ground. The following paragraphs give, in detail, the instructions and precautions necessary to accomplish ground handling functions. Parking, covers, ground handling, and towing equipment are shown in figure 2-38.

a. General Ground Handling Procedure. Accidents resulting in injury to personnel and damage to equipment can be avoided or minimized by close observance of existing safety standards and recognized ground handling procedures. Carelessness or insufficient knowledge of the aircraft or equipment being handled can be fatal. The applicable technical manuals and pertinent directives should be studied for familiarization with the aircraft, its components, and the ground handling procedures applicable to it, before attempting to accomplish ground handling.

b. Ground Handling Safety Practices. Aircraft equipped with turboprop engines require additional maintenance safety practices. The following list of safety practices should be observed at all times to prevent possible injury to personnel and/or damaged or destroyed aircraft:

(1) Keep intake air ducts free of loose articles such as rags, tools, etc.

(2) Stay clear of exhaust outlet areas.

(3) During ground runup, ensure the brakes are firmly set.

(4) Keep area fore and aft of propellers clear Of maintenance equipment.

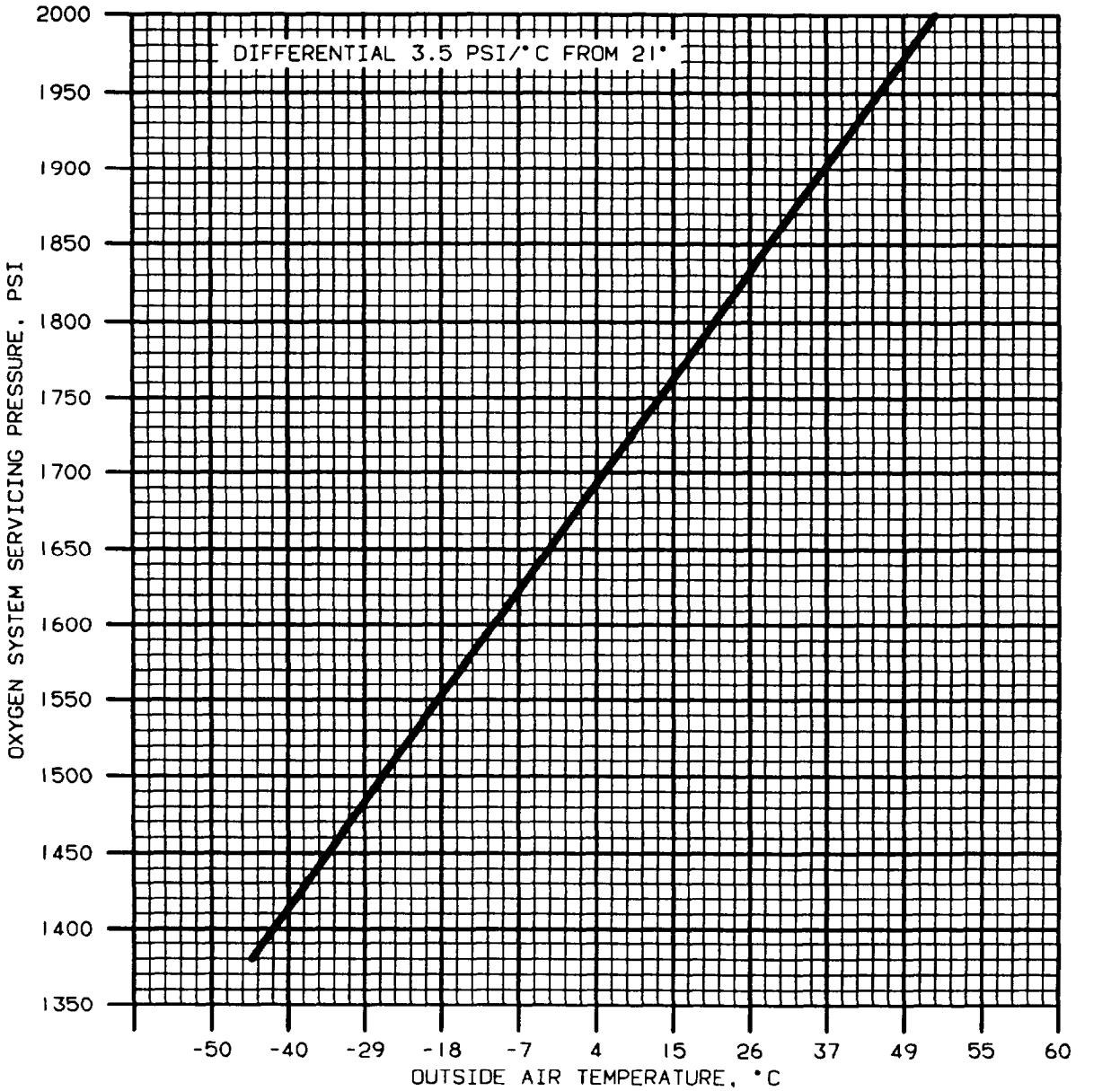

A958W02C0491 C

Figure 2-37. Oxygen System Servicing Pressure

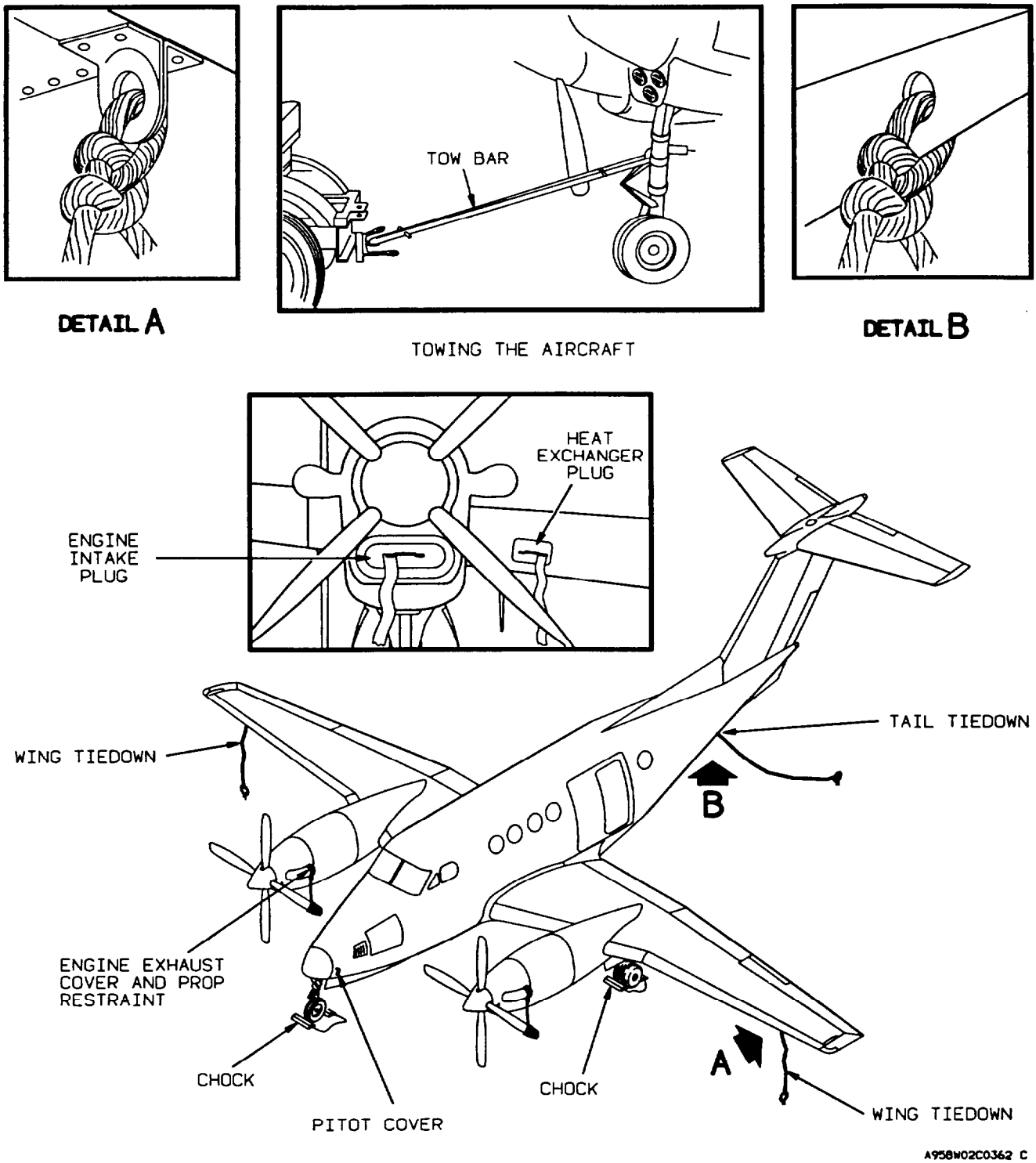

Figure 2-38. Parking, Covers, Ground Handling, and Towing Equipment

(5) Do not operate engines with flight control surfaces in the locked position.

(6) Do not attempt towing or taxiing of the aircraft with flight control surfaces in the locked position.

(7) When high winds are present, do not unlock the control surfaces until prepared to properly operate them.

(8) Do not operate engines while towing equipment is attached to the aircraft, or while the aircraft is tied down.

(9) Check the nose wheel position. Unless it is in the centered position, avoid operating the engines at high power settings.

(10) Hold control surfaces in the neutral position when the engines are being operated at high power settings.

(11) When moving the aircraft, do not push on propeller deicing boots. Damage to the heating elements may result.

c. Moving Aircraft on Ground. Aircraft on the ground shall be moved in accordance with the following:

(1) Taxiing. Taxiing shall be in accordance with chapter 8.

CAUTION

When the aircraft is being towed, a qualified person must be in the pilot's seat to maintain control by use of the brakes. When towing, do not exceed nose gear turn limits (fig. 2-39). Avoid short radius turns, and always keep the inside or pivot wheel turning during the operation. Do not tow aircraft with rudder locks installed, as severe damage to the nose steering linkage can result. When moving the aircraft backwards, do not apply the brakes abruptly. Tow the aircraft slowly, avoiding sudden stops, especially over snowy, icy, rough, soggy, or muddy terrain. In Arctic climates, the aircraft must be towed by the main gears, as an immense breakaway load, resulting from ice, frozen tires, and stiffened grease in the wheel bearings may damage the nose gear.

Do not tow or taxi aircraft with deflated shock struts.

(2) Towing. Towing lugs are provided on the upper torque knee fitting of the nose strut. When it is necessary to tow the aircraft with a vehicle, use the vehicle tow bar. Never exceed the turn limit arrows displayed on the placard located on the nose gear assembly (fig. 2-39).

d. Ground Handling Under Extreme Weather Conditions. Extreme weather conditions necessitate particular care in ground handling of the aircraft. In hot, dry, sandy, desert conditions, special attention must be devoted to finding a firmly packed parking and towing area. If such areas are not available, steel mats or an equivalent solid base must be provided for these purposes. In wet, swampy areas, care must be taken to avoid bogging down the aircraft. Under cold, icy, Arctic conditions, additional mooring is required, and added precautions must be taken to avoid skidding during towing operations.

2-95. PARKING.

Parking is defined as the normal condition under which the aircraft will be secured while on the ground. This condition may vary from the temporary expedient of setting the parking brake and chocking the wheels to the more elaborate mooring procedures described under Mooring. The proper steps for securing the aircraft must be based on the time the aircraft will be left unattended, the aircraft weight, the expected wind direction and velocity, and the anticipated availability of ground and air crews for mooring and/or evacuation. When practical, head the aircraft into the wind, especially if strong winds are forecast or if it will be necessary to leave the aircraft overnight. Set the parking brake and chock the wheels securely. Following engine shutdown, position and engage the control locks.

NOTE

Cowlings and loose equipment will be suitably secured at all times when left in an unattended condition.

a. Parking Brake. The parking brake system for the aircraft incorporates two lever-type valves, one for each wheel brake. Both valves are closed simultaneously by pulling out the parking brake handle. Operate the parking brake as follows:

1. Depress both brakes.
2. Pull parking brake handle out. This will cause the parking brake valves to lock the hydraulic fluid under pressure in the parking brake system, thereby retaining braking action.
3. Release brake pedals.

CAUTION

Do not set parking brakes when the brakes are hot, during freezing ambient temperatures. Allow brakes to cool before setting parking brakes.

4. To release the parking brakes push in on the parking brake handle.

b. Control Lock. The control lock (fig. 2-22) holds the engine and propeller control levers in a secure position. The elevator, rudder, and ailerons are secured in a neutral position. Install the control locks as follows:

1. With engine and propeller control levers in secure position, slide lock around the aligned control levers.
2. Install elevator and aileron lockpin through pilot's control column to lock control wheel.
3. Install rudder lock pin through floor mounted door, forward of pilot's seat, making sure rudder is in neutral position.
4. Reverse steps 1 through 3 above to remove control lock. Store control lock.

2-96. INSTALLATION OF PROTECTIVE COVERS.

The crew will ensure that the aircraft protective covers are installed when leaving the aircraft.

2-97. MOORING.

The aircraft is moored to ensure its immovability, protection, and security under various weather conditions. The following paragraphs give, in detail, the instructions for proper mooring of the aircraft.

a. Mooring Provisions. Mooring points (fig. 2-40) are provided beneath the wings and tail. Additional mooring cables may be attached to each landing gear. General mooring equipment and procedures necessary to moor the aircraft, in addition to the following, are given in TM 55-1500-204-25/1.

1. Use mooring cables of 1/4 inch diameter aircraft cable and clamp (clip-wire rope), chain, or rope (3/4 inch diameter or larger). Length of the cable or rope will be dependent upon existing circumstances. Allow sufficient slack in ropes, chains, or cable to compensate for tightening action due to moisture absorption of rope or thermal contraction of cable or chain. Do not use slip

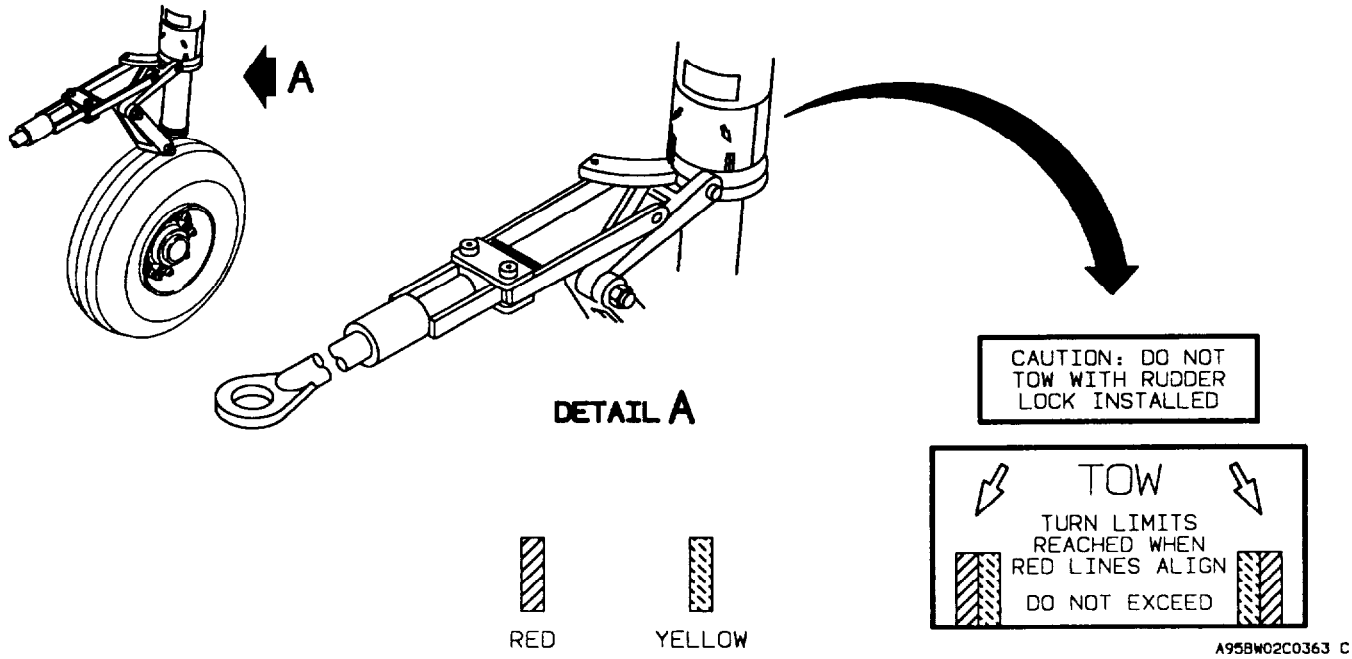

Figure 2-39. Towing Turn Limits

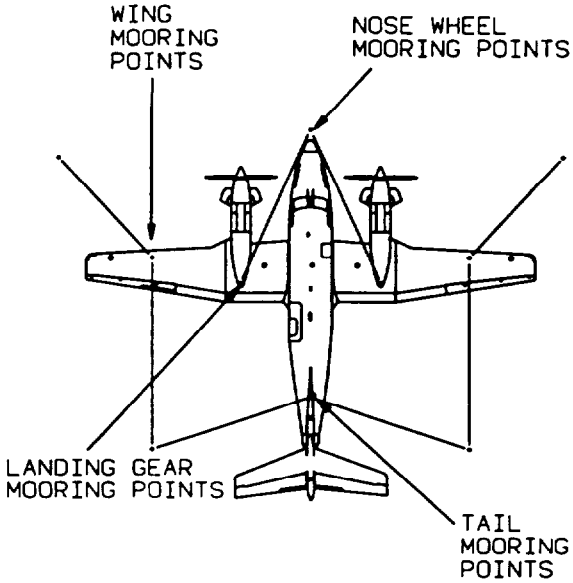

NOTE

IF STRONG WINDS ARE ANTICIPATED OR AIRCRAFT IS TO BE LEFT UNATTENDED, PROPELLER RESTRAINT, PITOT MAST, AND INTAKE COVERS MUST BE INSTALLED, AND THE FLIGHT CONTROLS LOCK ENGAGED.

THE USE OF DOUBLE OR SINGLE MOORING POINTS FOR NOSE AND/OR WING TIEDOWNS IS DETERMINED BY LOCAL OPTION DEPENDING ON TYPE AND AVAILABILITY OF AIRCRAFT SECURING EQUIPMENT.

USE ROPE ONLY (NYLON TYPE IS AVAILABLE) FOR NOSE TIEDOWN (DETAIL A). ATTACH ROPE(S) TO AIRCRAFT AND GROUND MOORING POINTS IN A MANNER THAT WILL PREVENT ROPE DAMAGE TO AIRCRAFT COMPONENTS.

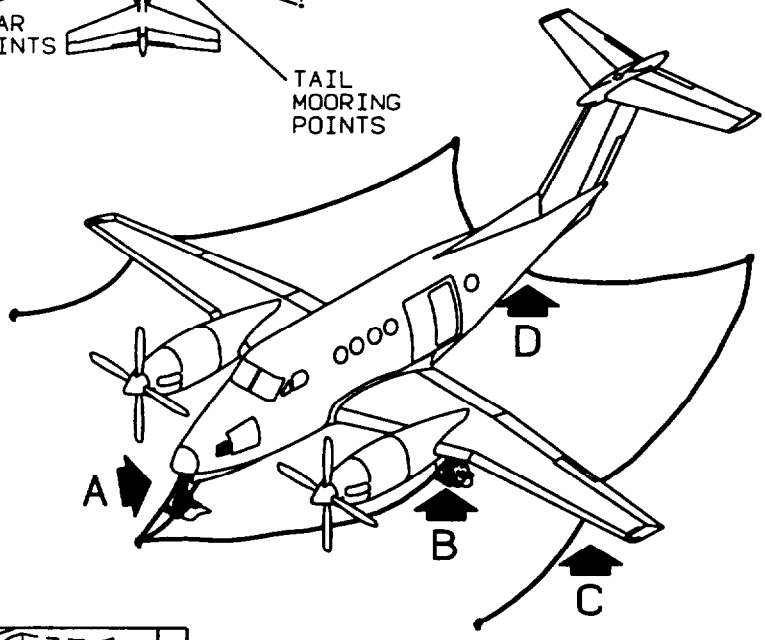

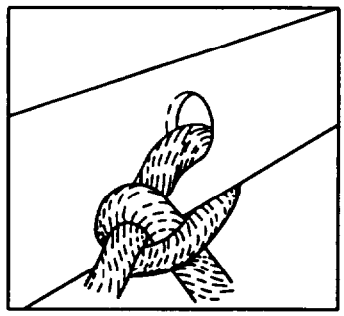

DETAIL D

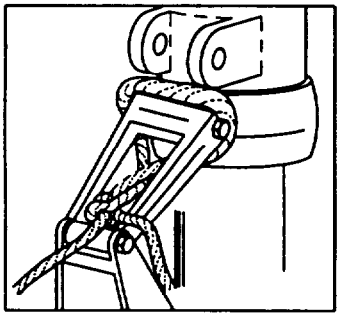

DETAIL A

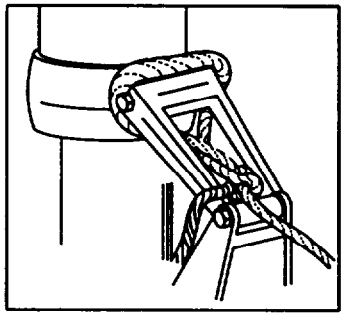

DETAIL B

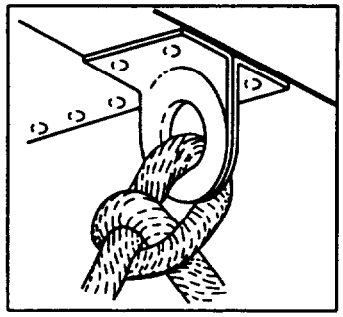

DETAIL C

A958W02C0364 C

Figure 2-40. Mooring the Aircraft

knots. Use bowline knots to secure aircraft to mooring stakes.

2. Chock the wheels.

b. Mooring Procedures for High Winds. Structural damage can occur from high velocity winds; therefore, if at all possible, the aircraft should be moved to a safe weather area when winds above 75 knots are expected. Moored aircraft condition is shown in figure 2-40. If aircraft must be secured, use the following steps:

1. After aircraft is properly located, place nose wheel in centered position. Point aircraft into wind, or as nearly so as is possible within limits determined by locations of fixed mooring rings. When necessary, a 45 degree variation of direction is considered to be satisfactory, Locate each aircraft at slightly more than one wing span distance from all other aircraft. Position nose mooring point approximately 3 to 5 feet downwind from ground mooring anchors.

2. Deflate nose wheel shock strut to within 3/4 inch of its fully deflated position.

3. Fill all fuel tanks to capacity, if time permits.

4. Place wheel chocks fore and aft of main gear wheels and nose wheel. Tie each pair of chocks together with rope or join together with wooden cleats nailed to chocks on either side of wheels. Tie ice grip chocks together with rope. Use sandbags in lieu of chocks when aircraft is moored on steel mats. Set parking brake as applicable.

5. Tie aircraft down by utilizing mooring points shown in figure 2-40. Make tiedown with 1/4 inch aircraft cable using two wire rope clips, or bolts and a chain tested for a 3000 pound pull. Attach tiedowns so as to remove all slack. Use a 3/4-inch or larger manila rope if cable or chain tiedown is not available. If rope is used for tiedown, use anti-slip knots (such as bowline knot) rather than slip knots. In the event tiedown rings are not available on hard surfaced areas, move aircraft to an area where portable tiedowns can be used. Locate anchor rods at points shown in figure 2-40. When anchor kits are not available, use metal stakes or deadman type anchors, providing they can successfully sustain a minimum pull of 3000 pounds.

6. In event nose position tiedown is considered to be of doubtful security due to existing soil condition, drive additional anchor rods at nose tiedown position. Place padded work stand or other suitable support under the aft fuselage tiedown position and secure.

7. Place control surfaces in locked position and trim tab controls in neutral position. Place wing flaps in up position.

8. The requirements for dust excluders, protective covers, and taping of openings will be left to the discretion of the responsible maintenance officer or the pilot of the transient aircraft (fig. 2-40).

9. Secure propellers to prevent windmilling (fig. 2-38).

10. Disconnect battery.

11. During typhoon or hurricane wind conditions, mooring security can be further increased by placing sandbags along the wings to break up the aerodynamic flow of air over the wing, thereby reducing the lift being applied against the mooring by the wind. The storm appears to pass two times, each time with a different wind direction. This will necessitate turning the aircraft after the first passing.

12. After high winds, inspect aircraft for visible signs of structural damage and for evidence of damage from flying objects. Service nose shock strut and reconnect battery.

CHAPTER 3
AVIONICS

Section I. GENERAL

3-1. INTRODUCTION.

This chapter covers all avionics equipment installed in the C- 12R aircraft. It provides a brief description of the equipment, the technical characteristics, and locations. It covers systems and controls, and provides the proper techniques and procedures to be employed when operating the equipment. For more detailed operational information consult the vendor manuals that accompany the aircraft loose tools.

3-2. AVIONICS EQUIPMENT CONFIGURATION.

The aircraft's avionics consist of three groups of electronic equipment. The communication group consists of the intercom system, AM/FM (VHF/UHF) transceiver, VHF-AM transceivers (2). HF transceiver, an emergency locator transmitter (ELT), and a cockpit voice recorder. The navigation group consists of VOR/localizer/glideslope/ marker beacon receivers (2). automatic direction tinder receiver (ADF), TACAN receiver, a multisensor navigation system, a radio altimeter system, a gyromagnetic compass system, an electronic flight instrument system (EFIS), and a digital integrated flight control system. The transponder and radar group consists of a weather radar system, transponder, and a servoed encoding altimeter indicator. The transponder and radar group includes an identification, position, and emergency tracking system, and a radar system to locate potentially dangerous weather areas. A ground proximity altitude advisory system (GPAAS) is also installed.

3-3. POWER SOURCE.

a. DC *Power*. DC power for the avionics equipment is provided from four sources: the aircraft battery, left and right generators, and external power. Power is routed through two 50-ampere circuit breakers to the avionics power relay, which is controlled by the **AVIONICS MASTER PWR** switch located on the pilot's subpanel (fig 2-6). Individual system circuit breakers are shown in figure 2-7 and the associated avionics buses are shown in figure 2-27.

(1) AVIONICS MASTER PWR switch. A switch placarded **AVIONICS MASTER PWR - OFF,** located on the pilot's subpanel, controls power to the avionics buses.

(a) Off. In the aft (off) position, power from the 5-ampere circuit breaker, placarded **AVIONICS MASTER,** located on the right sidewall circuit breaker panel (fig. 2-7). energizes the avionics relay, removing power from the avionics buses.

(b) *On*. With the switch in the on (up) position, the avionics power relay is de-energized and power is applied to the avionics buses.

NOTE

If the **AVIONICS MASTER PWR** switch fails to operate, power to the individual avionics circuit breakers can be provided by pulling the 5-ampere circuit breaker, placarded **AVIONICS MASTER,** located on the right sidewall circuit breaker panel (fig. 2-7).

b. Single-Phase AC Power. Two static inverters supply 400 Hz single-phase 115 volt and 26 volt AC electrical power to the avionics equipment. The inverters are controlled by a switch placarded **INVERTER, NO 1 - OFF - NO 2,** located on the pilot's subpanel.

Section II. COMMUNICATIONS

3-4. COMMUNICATIONS EQUIPMENT GROUP DESCRIPTION.

The communications equipment group consists of an intercom system connected to a dual audio control panel serving both the pilot and copilot, which interfaces with VHF, UHF, and HF transceivers and provides reception of audio from VOR. localizer, marker beacon, TACAN/DME, and ADF receivers.

3-5. MICROPHONES, SWITCHES, AND JACKS.

Boom and oxygen mask microphones can be utilized in the aircraft.

a. Control Wheel Microphone Switches. The pilot and copilot are each provided with control wheel microphone switches placarded **MIC.** located behind the outboard handgrip of their respective control wheels (fig. 2-21). When the control wheel microphone switches are depressed, voice audio signals from the respective microphone are routed to the transmitter selected by the respective transmitter selector switch (located on the audio control panel, fig. 3-1).

b. Cockpit Floor Foot-Operated Microphone Switch. The copilot is provided with a foot-operated microphone switch, placarded **MIC,** located on the cockpit floor, forward of his respective seat position.

Depressing the foot-operated microphone switch routes audio signals to the device selected by the copilot's transmitter selector switch located on the audio control panel (fig. 3-1).

c. Microphone Jack Selector *Switches.* Two switches, placarded **MIC, MIC, NORMAL - OXYGEN MASK,** located on the left and right sides of the instrument panel (fig. 2-17). provide a means of selecting which microphone jack is connected to the audio system. When the pilot's or copilot's switch is set to the **NORMAL** position, the headset jack is connected to the respective audio system. When set to the **OXYGEN MASK** position, the oxygen mask jack is connected to the respective audio system.

3-6. AUDIO CONTROL PANELS.

a. Description. A dual audio control panel (fig. 3-1) located on the instrument panel serves both the pilot and copilot. Each audio control panel is powered by its respective 2-ampere circuit breaker, placarded **PILOT AUDIO** and **COPILOT AUDIO,** located on the right sidewall circuit breaker panel (fig. 2-7).

b. Audio Control Panel Controls and Functions (fig. 3-1).

(1) Pilot's and copilot's receiver audio monifor switches. The pilot and copilot are each provided with a set of identical receiver audio monitor switches, placarded **PILOT** and **COPILOT AUDIO OFF.**

(a) *VHF 1 and 2.* These switches connect the user's headset or speaker to the number 1 or 2 VHF communications transceiver audio.

(b) AM/FM. These switches connect the user's headset or speaker to the AM/FM (VHF/UHF) communications transceiver audio.

(C) HF. These switches connect the user's headset or speaker to the HF communications transceiver audio.

(d) NAV 1 and 2. These switches connect the user's headset or speaker to the number 1 or 2 VHF navigation receiver audio.

(e) *MKR BCN.* These switches connect the user's headset or speaker to the marker beacon receiver audio.

(f) DME 1 and 2. These switches connect the user's headset or speaker to the number 1 or 2 DME transceiver audio.

(g) ADF. These switches connect the user's headset or speaker to the ADF navigation receiver audio.

(2) Transmitter selector *switches.*

(a) VHF *1 and* VHF *2 position.* Connects the user's headset or speaker to audio from, and connects user's microphone to the respective VHF communications transceiver transmitter.

(b) AM/FM position. Connects the user's headset or speaker to audio from, and connects user's microphone to the AM/FM (VHF/UHF) communications transceiver transmitter.

(C) *HF.* Connects the user's headset or speaker to audio from, and connects user's microphone to the respective HF communications transceiver transmitter.

(d) CABIN position. Connects user's microphone to the cabin speakers.

(3) *Master volume control.* The master volume control, placarded **VOL.** located on the transmitter selector switches, controls audio volume.

(4) *Cockpit speaker switch.* This switch, placarded **AUDIO SPKR - OFF,** is set to the on (up) position to route desired audio to the cockpit speakers.

(5) Audio emergency/normal switch. A two-position switch placarded **AUDIO, EMER - NORM,** provides a means of selecting a secondary audio source in the event of a failure disabling both audio amplifiers. When the switch is set to the **EMER** position, power is removed from both audio amplifiers and audio is routed directly from the receivers to the headsets. Speaker audio and cabin intercom will be inoperative. When the switch is set to the NORM position, audio is routed normally through an amplifier to speakers or headsets.

(6) *Voice/range switch.* The pilot and copilot are each provided with a three-position switch placarded **VOICE - BOTH - RANGE,** which controls selection of ADF voice or range filtering. When the switch is set to the **VOICE** position, the range tone is disabled, enhancing voice identification. When the switch is set to the **RANGE** position, the 1020 Hz range tone is enhanced, and voice is suppressed.

(7) Paging volume control. The paging volume control, placarded **PAGING VOL,** controls audio volume to the cabin speakers.

(8) Interphone volume control. The interphone volume control, placarded **INTPH VOL,** controls interphone audio volume.

(9) Hot interphone switch. The hot interphone switch, placarded **HOT INTPH - OFF.** allows selection of interphone system.

(10) Sidetone volume adjustment port. The pilot and copilot are each provided with a sidetone volume adjustment port, placarded **SIDETONE,** which allows adjusting the volume level of the sidetone.

(11) Interphone sensitivity adjustment port. The pilot and copilot are each provided with an interphone sensitivity adjustment port, placarded **INTPH SENS,** which allows adjustment of the voice actuated interphone activation sensitivity level.

(12) DME 1 hold switch-indicator. The **DME 1** hold function is controlled by a push on/push off switch-indicator. placarded **DME 1 HOLD PUSH/SW.** Depressing the switch-indicator selects the DME hold function and causes the switch-indicator to annunciate **ON.**

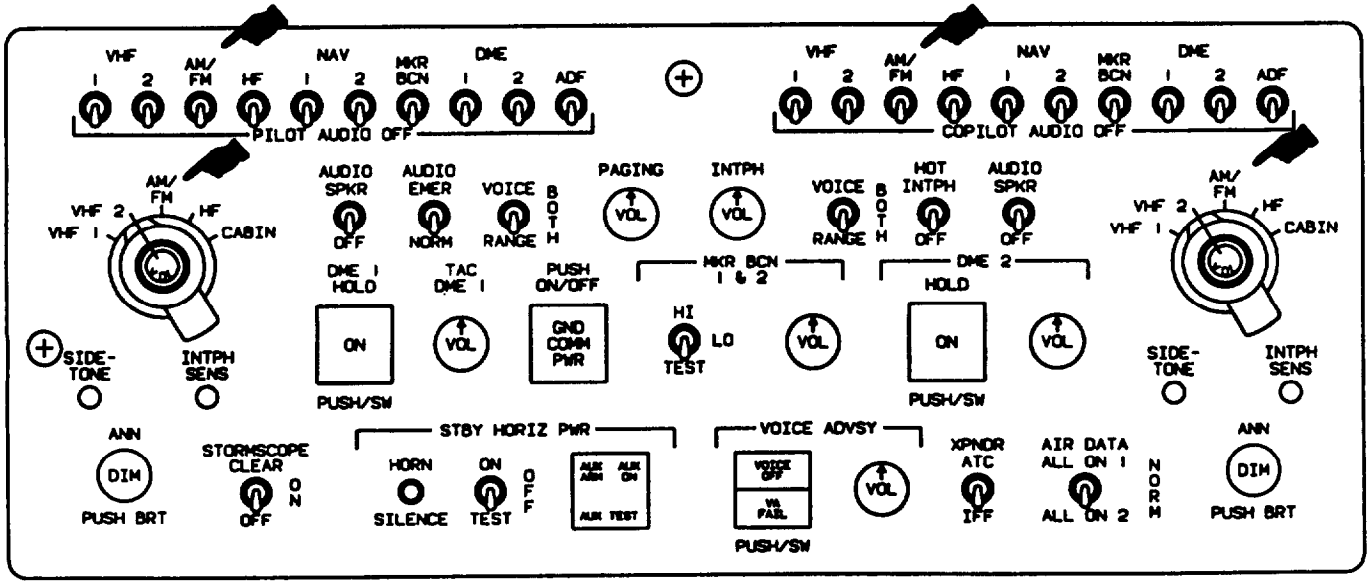

Figure 3-1. Audio Control Panel

(13) TACAN DME 1 volume control. A **TACAN DME 1** volume control, placarded **TAC DME 1 VOL,** controls volume level of **TACAN/DME 1** audio.

(14) Ground communication switch. A push on/push off switch, placarded **GND COM PWR PUSH ON/OFF,** allows selection of ground comm feature. When selected the ground comm feature applies power to the number 1 VHF communications transceiver allowing radio communication while on the ground without setting the **BATT** switch **or AVIONICS MASTER PWR to ON.**

(75) Marker beacon sensitivity/test switch. A three position switch placarded **MKR BCN 1 & 2 HI - LO - TEST,** selects sensitivity of the marker beacon receivers and test function. When the switch is set to the **HI** position, the marker beacon receivers are set to high sensitivity. When the switch is set to the **LO** position, the marker beacon receivers are set to low sensitivity. When the switch is held in the spring-loaded **TEST** position, the marker beacon annunciator lights will be illuminated.

(16) Marker beacon volume control. The marker beacon volume control, placarded **MKR BCN 1 & 2 VOL.** allows adjustment of the audio volume level of both marker beacon receivers.

(17) DME 2 hold switch-indicator. The **DME 2** hold function is controlled by a push on/push off switch-indicator, placarded **DME 2 HOLD PUSH/SW** pressing the switch-indicator selects the DME hold function and causes the switch-indicator to annunciate **ON.**

(18) DME 2 volume control. A DME 2 volume control, placarded **DME 2 VOL,** controls volume level of DME 2 audio.

(19) Annunciator brightness control. Annunciator brightness is controlled by a knob, placarded **ANN - DIM - PUSH BRT.** which controls the brightness level of the EFIS annunciators, located on the instrument panel above the airspeed indicators.

(20) Stormscope control switch. Lightning activity weather avoidance information which is displayed on the EHSI's and the MFD is controlled by a switch placarded **STORMSCOPE - CLEAR - ON - OFF.** The **CLEAR** position will remove displayed lightning strike information. When the switch is set to ON, lightning strike information will be provided to the displays.

(21) Standby horizon power warning horn silence switch. The standby horizon power warning horn may he silenced by depressing a pushbutton switch placarded **HORN SILENCE.**

(22) Standby horizon power control switch. The standby horizon power system is controlled by a switch placarded **ON - OFF - TEST.**

(23) Standby horizon power annunciator. **The** standby horizon power system annunciator, placarded **AUX ARM - AUX ON - AUX TEST,** is used to monitor functional state of the system.

(24) *Voice advisory system (GPAAS)* switch-*indicator.* The upper half of the voice advisory system switch-indicator (yellow) is placarded **VOICE OFF. The** lower half of the indicator (red) is placarded **VA FAIL.** Depressing the upper **(VOICE OFF)** switch-indicator disables the GPAAS voice advisory, and illuminates the **VOICE OFF** indicator light. The **VA FAIL** annunciator light will illuminate when the GPAAS fails.

(25) *Voice advisory system (GPAAS) volume control.* A GPAAS volume control placarded **VOL,** controls the audio volume of the GPAAS advisory/warning messages down to a certain minimum level.

(26) Transponder selection switch. A transponder selection switch, placarded **XPNDR - ATC - IFF,** allows selection of either the commercial transponder (ATC) or military transponder (IFP).

(27) Air data computer selection switch. An air data computer selection switch, placarded **AIR DATA, ALL ON 1 - NORM - ALL ON 2,** allows operating both EPIS systems on the number 1 air data computer **(ALL ON 1).** the number 2 air data computer **(ALL ON 2),** or operating one EPIS system on the number 1 air data computer and the other EPIS system on the number 2 EPIS system in the **NORM** position.

3-7. AM/FM (VHF/UHF) TRANSCEIVER (RT-5000).

The AM/FM (VHF/UHF) transceiver (RT-5000) may be operated in the following frequency ranges:

AM/FM frequencies

29.7 to 88 MHz

108 to 116 MHz (receive only)

118 to 156 MHz (AM band)

220 to 225 MHz

225 to 400 MHz

FM frequencies

138 to 174 MHz

403 to 512 MHz

512 to 806 MHz

806 to 960 MHz

The transceiver is operated by a control-display unit (C-5000) located in the pedestal extension (fig. 2-12). The system is powered through a IO-ampere circuit breaker placarded AM/FM, located on the right sidewall circuit breaker panel (fig. 2-7).

The transceiver control-display unit can store 350 channels in memory. Frequencies are stored by channel number, alphanumeric identifier assigned by the user, or by frequency. Each channel has its own separate transmit and receive frequency, transmit and receive squelch control setting, channel identifier, and channel number.

An audio recorder is provided which will provide playback of the last 10 seconds of the most recent reception.

a. AM/FM *(VHF/UHF) Transceiver Control-Display Unit (fig. 3-2) Controls, Indicators, and Functions.*

(1) Upper and lower soft keys. The upper and lower soft keys are used as display controls.

Depending upon the display page in use, depressing the upper or lower soft key will have the following results:

1 Dim display menu page. Depressing the upper soft key while on the dim display menu page will brighten the fluorescent display. Depressing the lower soft key while on the dim display menu page will dim the fluorescent display.

2 Pulse/tone menu pages. Depressing the upper soft key while on the pulse/tone menu page selects the tone option. Depressing the lower soft key while on the pulse&one menu page deselects the tone option.

3 Squelch level menu page. Depressing the upper soft key while on the squelch level menu page will increase squelch level. Depressing the lower soft key while on the squelch level menu page will decrease squelch level.

4 Relay mode menu page. Not applicable with one transceiver.

5 Dual microphone mode menu page. Not applicable with one transceiver.

(2) Display. This fluorescent display shows system operation.

(3) Direct/repeat or number 1 key. Depressing the **D/R** key alternates transceiver system operation between direct and repeat transmit and receive operating modes. When menu pages are displayed depressing this key (1) moves backward through them. Depressing this key (1) is also used to enter number 1 when numeric entry is required.

(4) Menu or number 2 key. Depressing the **MENU** key brings the menu pages up on the display. When menu pages are displayed, depressing this key (2) moves forward through them. Depressing this key (2) is also used to enter number 2 when numeric entry is required.

(5) Display or number 3 key. Depressing the **DISP** key brings up a display page. Depressing this key (3) is also used to enter number 3 when numeric entry is required.

(6) Mute or number 4 key. Depressing the **MUTE** key temporarily inhibits all monitored receivers except the active transceiver (RT). Depressing the MUTE key alternates audio between mute and normal. Depressing this key (4) is also used to enter number 4 when numeric entry is required.

NOTE

MUTE function does not work with only one transceiver installed.

(7) Scan or number 8 key. Depressing the **SCAN** key will enter the system into the SCAN mode. Depressing this key (8) is also used to enter number 8 when numeric entry is required.

(8) Data transfer port. The data transfer port allows uploading and downloading channel programming from a personal computer using remote programmer software. The data transfer port also allows crossfilling channel programming from one C-5000 control-display unit to *another.*

(9) Cursor movement knob (outer knob). Turning the cursor movement knob moves the cursor to the desired position.

(10) Cursor field value knob and enter button. Turning the cursor field value knob changes the value in the cursor field. Depressing the knob enters selection.

(11) *Number keypad* ***activation or # sign*** *key.* Depressing the **NUM** key activates the numeric keypad for channel or frequency selection. Depressing this key (#) is also used to enter a number sign when required.

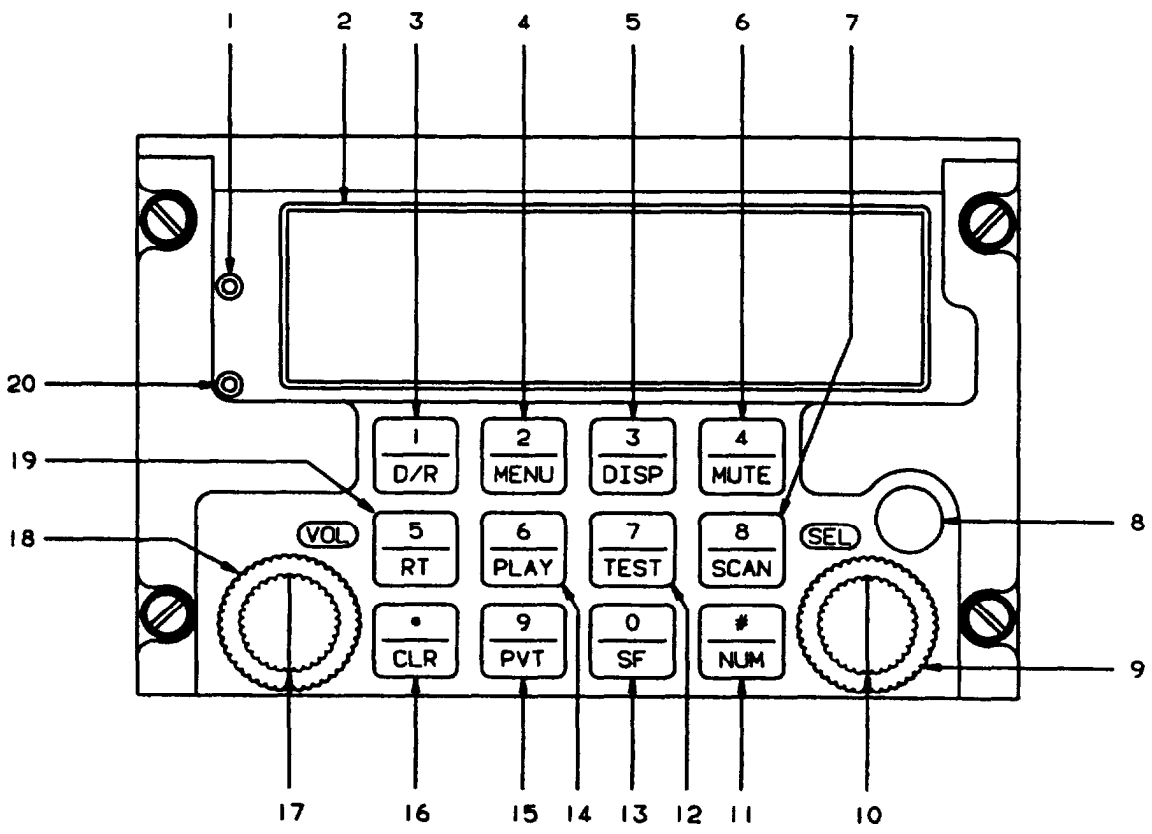

1. Upper Soft Key
2. Display
3. Direct/Repeat or Number 1 Key
4. Menu or Number 2 Key
5. Display or Number 3 Key
6. Mute or Number 4 Key
7. Scan or Number 8 Key
8. Data Transfer Port
9. Cursor Movement Knob (Outer Knob)
10. Cursor Field Value Knob and Enter Button (When Depressed)
11. Number Keypad Activation or # Sign Key
12. Test or Number 7 Key
13. Spectal Function or 0 Key
14. Play or Number 6 Key
15. Private or Number 9 Key
16. Clear or Asterisk (*) Key
17. Active Transceiver Volume Control Knob or On/Off Switch (When Depressed)
18. Monitored Tranceiver Volume Control (Outer Knob)
19. Receiver-Transmitter or Number 5 Key
20. Lower Soft Key

Figure 3-2. AM/FM (VHF/UHF) Transceiver Control-Display Unit

(12) Test or number 7 key. Depressing the **TEST** key will manually disable the squelch circuit on the active transceiver and will display the transmit frequency if the appropriate page is displayed. Releasing the key will return the transceiver to normal squelch operation. Depressing this key (breaking squelch) is normally used to facilitate setting receiver volume. Depressing this key (7) is also used to enter number 7 when numeric entry is required.

(13) *Special* function or 0 key. Depressing the **SF** key brings up the special function display (not implemented). Depressing this key (0) is also used to enter number 0 when numeric entry is required.

(14) *Play* or number 6 key. Depressing the **PLAY** key will initiate audio playback of recorded audio on selected transceiver. Depressing this key (6) is also used to enter number 6 when numeric entry is required.

(15) *Private or number* 9 key. Depressing the **PVT** key selects the voice encryption function. Depressing this key (9) is also used to enter number 9 when numeric entry is required.

(16) *C/ear* or *asterisk* (*) key. Depressing the **CLR** key is used to exit an operation. Depressing this key (*) is also used to enter an asterisk when required.

(17) Active transceiver volume control knob or on/off switch. The active transceiver volume control knob (inner knob) is used to adjust the volume of the received audio from the active transceiver when turned. Depressing the control knob turns the system on and off.

(18) Monitored transceiver volume control. Turning the monitored transceiver volume control knob (outer knob) adjusts the volume of the monitored transceiver system.

NOTE

Only one transceiver is available (main), so monitored transceiver volume control has no effect.

(19) Receiver-transmitter or number 5 key. Depressing the **RT** key will enable or disable a transceiver or guard receiver. After depressing the RT key depress the number of the transceiver to enable or disable it. Depressing this key (5) is also used to enter number 5 when numeric entry is required.

b. Display Pages.

(7) Self test page. The **SELF TEST** page will appear when the system is turned on. While this page is displayed, the system is performing internal self tests and is initializing memory. The version number of the software that is being used is displayed on this page.

(2) Dim display page. Depressing the **MENU key** will **bring up the DIM DISPLAY** page. Depress the lower soft key to dim the display or the upper soft key to brighten the display. Depressing the **CLR** key will return the display to the control display alpha page.

NOTE

Momentarily depressing the on/off knob will return the display to maximum brightness.

(3) Off page. Depressing the on/off knob for at least four seconds will bring up the **OFF** page. The off page will flash for 4 additional seconds, warning the operator that the system is being turned off. After these 4 seconds have elapsed, the system will turn off.

(4) *Control display alpha page.* Depressing the **CLR** key will bring up the control display alpha page. This display shows frequency by alphanumeric identifier. The control display alpha page (fig. 3-2.1) shows the status of the main transceivers, guard receivers, and which transceiver and channel the primary microphone will use. Tone, transmitter power level, and repeater/direct information is displayed and can be changed on this page.

NOTE

Depressing the **CLR** key will always bring display back to the control display alpha page and will put the cursor under the channel number.

(5) Control display frequency page. To bring up the control display frequency page, depress the **DISP** until it appears. The control display frequency page is identical to the control display alpha page except that that the frequency is displayed as the actual frequency number instead of an alphanumeric identifier.

(6) System display page. To bring up the system display page from the control display alpha page, depress the **DISP** until it appears.

To bring up the system display page from any other page, depress the **CLR** key as many times as is necessary until the control display alpha page appears, then depress the **DISP** as many times as is necessary until the system display page appears. The following operations can be performed from the system display page:

Selecting an active transceiver

Disabling and enabling a transceiver

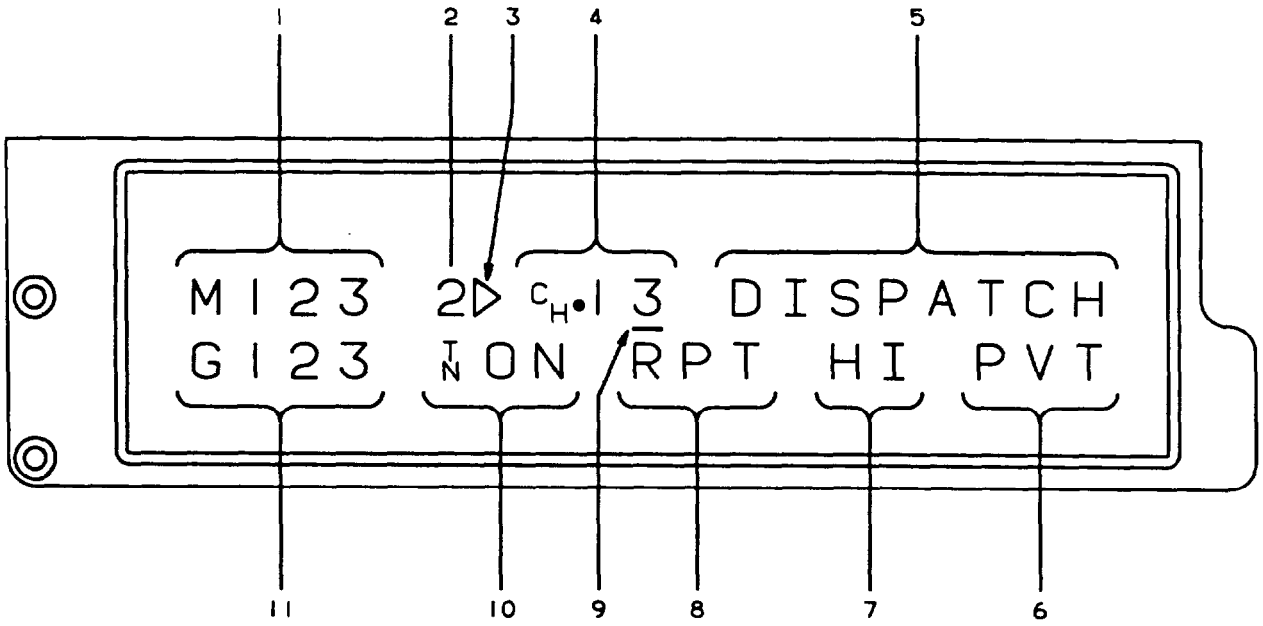

1. Available Main Transceiver Numbers
2. Active Main Transceiver Number
3. Transmit Indicator
4. Channel Number
5. Alphanumeric Frequency Identifier
6. Encryption Annunctator
7. Transceiver Power Level Indicator
8. Transceiver Repeat or Direct Indicator
9. Cursor
10. Receive and Transmit Subaudible Tone Status
11. Tranceiver Numbers With Operating Guard

Figure 3-2.1 AM/FM (VHF/UHF) Transceiver Control-Display Alpha Page

Selecting the preset channel

Selecting an active guard

Changing the guard preset channel

Disabling and enabling guards

(7) Active/standby display alpha page. To bring up the active/standby display alpha page from the control display alpha page, depress the **DISP** key until it appears.

To bring up the active/standby display page from any other page, depress the **CLR** as many times as is necessary until the control display alpha display page appears, then depress the **DISP** key as many times as is necessary until the active/standby display alpha page appears. The active/standby display alpha page is used to change the active/standby transceiver or preset channel number.

(8) Active/standby display frequency page. To bring up the active/standby frequency display page from the control display alpha page, depress the **DISP** key until it appears.

To bring up the active/standby frequency display page from any other page, depress the **CLR** key as many times as is necessary until the control display alpha page appears, then depress the **DISP** key until the active/standby frequency page appears. The active/standby frequency display page is identical to the active/standby display alpha page except that the frequency is displayed as the actual frequency number instead of an alphanumeric identifier.

(9) Squelch level. The squelch level menu page allows changing the preset squelch level. Depress the **MENU** key to bring up the squelch level menu page. To increase squelch level one increment, depress the upper **soft key** one **time. To increase squelch level more than one** increment, hold the upper soft key down until the desired number of increments is obtained. The arrow at the left of **INC** will flash for each increment. To decrease squelch level one decrement, depress the lower soft key one time. To decrease squelch level more than one decrement, hold the lower soft key down until the desired number of decrements is obtained. The arrow at the left of **DEC** flashes for each decrement. Depress the **CLR** key to return to the last display page shown before going to the squelch level menu page.

(70) *Program presets page.* The program presets page is used to add, edit, or delete preset channels. Before programming. prepare a list with the following information for all channels to be programmed as follows:

Channel number

Alphanumeric identifier

Transmit and receive frequencies

Transmit and receive tones

Transmit and receive channel discretes

Transmit power status

(11) Recorded audio playback. The system automatically records the first 10 seconds of received audio from each transceiver and will reset and start recording again with each squelch break. To play a recording use the following procedure:

1. **PLAY** key - Depress. A prompt will appear asking which transceiver's recording you want played back.
2. Numeric keypad - Depress the number of the transceiver you want played back.
3. **CLR** - Depress when playback is complete to return to a display page.

c. Operating Procedures.

(1) Initial operating procedure.

1. On/off switch - Depress. Self test page will appear. When self test is complete the control display alpha page or the last display page shown before system shutdown will appear.
2. **MENU** key - Depress.
3. Upper and lower soft keys - Depress as required to adjust display brightness.

NOTE

Momentarily depressing the on/off knob will return display to maximum brightness.

4. **CLR** key - Depress.
5. Cursor movement control knob and cursor field value knob - Set channel or frequency as desired.

(2) Programming preset channels.

(a) *Initial preset channel programming procedure.*

1. **MENU** key - Depress until **PROGRAM PRESETS** menu page appears.
2. Enter knob - Depress. **PRESET PASSWORD** page will appear.

3. Four number preset password - Enter. (Password is 2222.) **PRESET CHANNEL** page will appear.

4. Enter knob - Depress. **ADD/EDIT/DELETE** page will appear.

(b) Adding a preset Channel.

1. Number 1 key - Depress to add a channel.

2. Cursor movement control knob - Turn to place cursor under the digit to be changed.

3. Cursor field value knob - Turn to select desired number.

4. Number 2 key - Depress. **R/T SYS** # (channel transceiver) page will appear.

5. Cursor field value knob - Turn to display transceiver associated with selected channel.

6. Number 2 key - Depress. **ALPHA ID** page will appear.

7. Cursor movement control knob and cursor field value knobs - Set desired alphanumeric values in spaces.

8. Number 2 key - Depress to select the entered identifier. **RX FREQ** (receive frequency) page will appear.

9. # key - Depress.

10. Keypad - Enter frequency.

11. Enter knob - Depress.

12. Number 2 key - Depress to select entered receive frequency. **RX TONE** (receive tone) page will appear.

13. Cursor movement knob - Place cursor under last dot.

14. Cursor field value knob - Set desired number.

15. Number 2 key - Depress to select entered receive tone. **MODULATION TYPE** page will appear.

16. Cursor field value knob - Select AM or FM. **TX FREQ** (transmit frequency) page will appear.

17. # key - Depress.

18. Keypad - Enter frequency.

19. Enter knob - Depress.

20. Number 2 key - Depress to enter transmit frequency. **TX TONE** (transmit tone) page will appear.

21. Cursor movement knob - Place cursor under last dot.

22. Cursor field value knob - Set desired value.

23. Number 2 key - Depress to select transmit tone. Advanced features page will appear.

24. Number 2 key - Depress if advanced features are not required and proceed to step 52.

25. Number 3 key - Depress if advanced features are required. **DISPLAY FREQ** page will appear*

26. Cursor value knob - Turn to display **YES** or **NO.**

NOTE

If NO is selected, asterisks (*) will appear for the preset channel frequency during operation.

27. Number 2 key - Depress to select option. **RX ONLY** (receive only) page will appear.

28. Cursor value knob - Turn to display **YES** or **NO.**

29. Number 2 key - Depress to select option. **RX TYPE** (receiver type) page will appear.

30. Cursor value knob - Turn to select transceiver type.

NOTE

Only the RT-5000 transceiver is available.

31. Number 2 key - Depress to select option. **RX CMDS** (receive channel discrete) page will appear.

NOTE

Channel discretes are a combination of five electronic switches that can be programmed to be activated with each guard or main channel (transmit can be different from receive). There are five transmit and receive discretes assigned to each transceiver. Outputs are used to control external interfaces such as antenna switching, external encoder or decoder enable/disable functions, or any external function or equipment switching associated with a given channel.

32. Cursor movement knob - Place cursor under appropriate space. (Switch #1 is in far right position, and switch #5 is in far left.)

33. Cursor value knob - Turn to select value for each switch (1=ground, or O=open circuit).

34. Number 2 key - Depress to select switch configuration. **TX CMD-S**(transmit channel discrete) page will appear.

35. Cursor movement knob - Place cursor under appropriate space. (Switch #1 is in far right position, and switch #15 is in far left)

36. Cursor value knob - Turn to select value for each switch (1=ground, or 0=open circuit).

37. Number 2 key - Depress to select switch configuration. **TX PWR** (transmit power) page will appear.

38. Cursor field value knob - Turn to select **HI** or **LO.**

39. Number 2 key - Depress to select option. **2ND IF INJECTION** (second intermediate frequency injection) page will appear.

NOTE

IF (intermediate frequency) injection is a function that is used to eliminate interfering signals from the applicable IF (intermediate frequency) range.

40. Cursor field value knob - Turn to select **HI** or **LO.**

41. Number 2 key - Depress to select option. **3RD IF INJECTION** (third intermediate frequency injection) page will appear.

42. Cursor field value knob - Turn to display **HI** or **LO.**

43. Number 2 key - Depress to select option. **RX AUDIO PHASE** (receive audio phase) page will appear.

NOTE

Receive audio phase is used to reverse the phase of a received signal that has the wrong phase due to encryption processing.

44. Cursor value knob - Turn to select audio phase setting of 0 or 180.

45. Number 2 key - Depress to select option. **RX BANDWIDTH** (receive bandwidth) page will appear.

46. Cursor field value knob - Turn to set desired bandwidth from the following options:

0=Standard BW.....14KHz

1=Narrow BW.....9 KHz

2=Wide BW.....35 KHz

3=Extra wide BW..... 70 KHZ

47. Number 2 key - Depress to select option. **TX DEVIATION** (transmit deviation) page will appear.

48. Cursor field value knob - Turn to set desired transmit deviation from the following options:

0=Standard BW.....5 KHz

1=Narrow BW.....2.5 KHz

2=Wide BW..... 5.6 KHz

3=Extra wide BW..... 5.6 KHz

49. Number 2 key - Depress to select option. **TX AUDIO PHASE** (transmit audio phase) page will appear.

NOTE

Transmit audio phase is used to reverse the phase of an output signal to provide correct signal interface.

50. Cursor field value knob - Turn to display desired audio phase setting.

51. Number 2 key - Depress to select option. **LOAD/REVIEW** page will appear.

52. Number 1 key - Depress to load preset channel selections into memory or:

53. Number 2 key - Depress to review preset channel selections. **ADD/ EDIT/DELETE** page will appear. Continue loading next preset channel if desired.

54. **CLR** key - Depress to return to preset channel page.

55. Number 1 key - Depress to return to **PROGRAM PRESETS** page.

(c) Editing a preset channel.

1. Initial preset channel programming procedures - Perform if necessary to bring up the **ADD/EDIT/ DELETE** display page.

2. Number 2 key - Depress to edit channel. Follow procedures for adding a preset channel starting with step 2, but changing only the items needing to be edited.

(d) Deleting a preset channel.

1. Initial preset channel programming procedures - Perform if necessary to bring up the **ADD/EDIT/ DELETE** display page.

2. Number 3 key - Depress to delete a channel. The delete channel page will appear with a preset channel number.

3. Cursor field value knob - Turn to select preset channel to delete.

4. Number 2 key - Depress to delete the selected channel.

(3) Shutdown procedure.

1. On/off knob - Depress. The off page will appear and flash to warn the operator that the system is turning off.

2. After 4 seconds the system will turn off.

3-8. VHF COMMUNICATIONS TRANSCEIVER (KTR 908).

a. Description. The VHF communications transceivers (fig. 3-3) provide airborne VHF communications on 1360 channels from 118.00 through 151.975 MHz in 25 kHz increments. Power output is 20 watts (16 watts minimum) for a reliable communication range of 110 nautical miles at 10,000 feet above ground level. Each transceiver is controlled by a KFS-598A transceiver control unit, located on the pedestal extension (fig. 2-12).

The solid-state transceiver includes automatic squelch with available manual override. Electronically alterable read only memory (EAROM) provides non-volatile storage of frequencies during power shutdown. Each VHF transceiver is powered through its respective 7.5-ampere circuit breaker, placarded **VHF NO. 1** or **VHF NO. 2,** located on the right sidewall circuit breaker panel (fig. 2-7).

b. VHF Transceiver Control Unit Operating Controls (KFS 598A).

(1) Active frequency display. Displays the active frequency (frequency to which the transceiver is tuned).

(2) Transmit annunciator. The transmit annunciator (a red **TX)** is located to the right of the active frequency display. Illumination of the transmit annunciator indicates that the transceiver is transmitting. If a microphone switch is held keyed for longer than 1 and 1/2 minutes, the key line to the transceiver will be disabled. The total display will then flash as long as the microphone key is held depressed.

(3) Photocell. The built-in photocell automatically controls display brightness.

(4) Frequency transfer switch. The frequency transfer switch is a pushbutton switch which transfers the frequency in the standby display to the active display and the frequency in the active display to the standby display each time it is depressed.

Depressing the frequency transfer switch for more than 2 seconds while in the standby entry mode will switch the transceiver control unit to the active entry mode.

Momentarily depressing the frequency transfer switch while in the active entry mode will return the transceiver control unit to the standby entry mode.

(5) Megahertz tuning knob. The megahertz tuning knob is the larger of two concentric knobs which are used to set the frequency in the standby frequency display. Rotation of the megahertz tuning knob sets the three digits

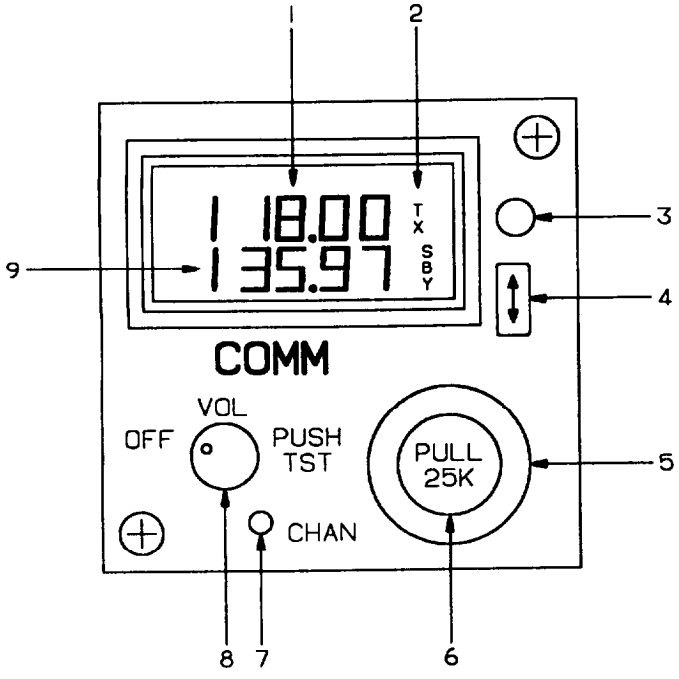

1. Active Frequency Display
2. Transmit Annunciator
3. Photocell
4. Frequency Transfer Switch
5. Megahertz Tuning Knob
6. Kilohertz Tuning Knob
7. Channel Switch
8. Power, Volume, and Squelch Test Control
9. Standby Frequency Display

A958W03C0370 C

Figure 3-3. VHF Communications Transceiver Control Unit (KFS 598A)

to the left of the decimal point in the standby frequency display. The numbers will roll over at the upper and lower frequency limits. Rotating the megahertz tuning knob in either direction with transceiver control unit in the channel mode will change the channel number and its corresponding frequency.

(6) Kilohertz tuning knob. The kilohertz tuning knob is the smaller of two concentric knobs which are used to set the frequency in the standby frequency display. Rotation of the kilohertz tuning knob sets the two digits to the right of the decimal point in the standby frequency display in 50 kilohertz increments. When the kilohertz tuning knob is pulled out, rotation of the knob will change the frequency in the standby frequency display in 25 kilohertz increments. The numbers will roll over at the upper and lower frequency limits. Rotating the kilohertz tuning knob in either direction with transceiver control unit in the channel mode will change the channel number and its corresponding frequency.

(7) *Channel* switch. The channel switch, placarded **CHAN,** is a pushbutton switch which will put the transceiver control unit into the channel mode when momentarily depressed, or into the program mode when held depressed for more than two seconds.

(8) Power, volume, and *squelch test control.* The **ON/OFF,** volume, and squelch test control, placarded **OFF, VOL,** and **PULL TEST,** controls operation of the transceiver control unit. Clockwise rotation from the **OFF** position applies power to the system and continued clockwise rotation increases volume. Pulling the knob out overrides the automatic squelch adjustment circuit so the desired listening level can be adjusted. Pushing the knob back in activates the automatic squelch adjusting circuit.

(9) Standby frequency display. Displays the standby (inactive) frequency.

c. Operating *Procedures.*

(1) Equipment turn-on. The transceiver and the control unit are turned on by clockwise rotation of the power, volume, and squelch test knob. When the transceiver is first turned on a momentary unsquelched state will occur. Depress the **PUSH TST** knob to override the automatic squelch circuit. To return to automatic squelch operation, depress the **PUSH TST** knob again. When a microphone is keyed, the transmit **(TX)** annunciator, located to the right of the active display window, will illuminate if the transmitter is transmitting. If a microphone is held keyed for more than 1 and 1/2 minutes, the key circuit to the transceiver will be disabled. The total transceiver control unit display will than flash as long as the microphone switch is held depressed.

(2) Frequency selection.

(a) Standby frequency entry mode. When the transceiver control unit is in the standby frequency entry mode, the active frequency (in the active frequency display) is selected by changing the frequency in the standby frequency display, then transferring the selected frequency to the active frequency display by depressing the frequency transfer switch. The frequency in the standby frequency display is changed by means of the megahertz and kilohertz tuning knobs on the transceiver control unit. The transceiver control unit will remain tuned to the frequency in the active frequency display as long as the transceiver control unit is in the standby frequency entry mode.

(3) Active frequency entry *mode.* When the transceiver control unit is in the active frequency entry mode, the active frequency (in the active frequency display) is changed directly by rotating the kilohertz and megahertz tuning knobs. The transceiver control unit is changed to the active frequency selection mode by holding the transfer switch depressed for longer than 2 seconds. Momentarily depressing the frequency transfer switch will change the transceiver control unit back to the standby entry mode and will return the standby frequency display to the frequency displayed before entering the active frequency male.

(4) Channel mode. Depressing the channel switch (placarded **CHAN)** will put the transceiver control unit into the channel mode. When the transceiver control unit is in the channel mode, the channel number is displayed in the active frequency display and the channel frequency is displayed in the standby frequency display. Channel frequencies have to be set with the unit in the program mode.

When the transceiver control unit is in the channel mode, the transceiver will be tuned to the frequency that is displayed in the standby frequency display. If no channels have been programmed, the transceiver control unit will display channel 1 **(CH 1)** with dashes in the standby frequency display for five seconds, then the unit will tune the transceiver to the last frequency displayed in the active frequency display,

Depressing the transfer switch for 2 seconds will change the transceiver control unit to the active frequency entry mode.

(5) Program mode. The frequencies and channel numbers used in the channel mode must be programmed into memory with the transceiver control unit in the program mode.

Depressing the channel switch **(CHAN)** for longer than 2 seconds will put the transceiver control unit into the program mode. The channel number that was last used will be displayed and flash in the active frequency display. With the channel number flashing, rotating the tuning knobs will change the channel number. A channel number with no programmed frequency will have dashes in the standby frequency display. In this case the transceiver will be tuned to the last valid frequency displayed in the active frequency display. Taking the transceiver control unit out of the program mode with dashes in the standby frequency display will will unprogram that channel. Depressing the frequency transfer switch will cause the channel number to stop flashing and the frequency to start flashing. The frequency can then be changed by rotating the tuning knobs. Depressing the frequency transfer switch again will cause the frequency to stop flashing and the channel to start flashing.

The transceiver control unit will be returned to the standby frequency entry mode by depressing the channel **(CHAN)** switch or a period of no activity for 20 seconds. The frequency mode prior to channel or program mode will be resumed, with the transceiver tuned to the frequency in the active frequency display.

3-9. HF COMMUNICATIONS TRANSCEIVER (KHF 950).

a. Description. The HF communications transceiver (fig. 3-4) provides long-range voice communications within the frequency range of 2.0000 to 29.9999 MHz (280,000 possible frequencies). The unit can employ either amplitude modulation **(AM)** or upper sideband **(USB)** modulation. (Lower sideband (LSB) modulation has not been enabled in this installation.) The HF system consists of a control display unit located on the pedestal extension, a receiver/exciter, power amplifier/antenna coupler, a bus adapter, and an antenna. The system is powered through a 25-ampere circuit breaker, placarded **HF POWER,** and a 5-ampere circuit breaker, placarded **HF REC,** located on the right sidewall circuit breaker panel (fig. 2-7).

b. HF Transceiver Control-Display Unit Controls and Functions.

(1) Digital display. The digital display provides frequency, mode, and operational status information. The upper area of the display shows a two digit channel number when in the program mode, followed by a dash and the first one or two digits of the operating frequency (with the

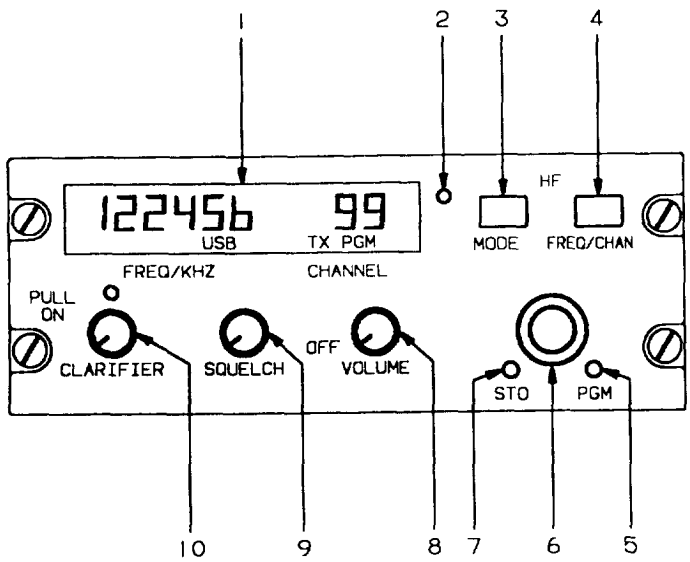

1. Digital Display
2. Photocell
3. Emission MODE Switch
4. Frequency/Channel Switch
5. Program Switch
6. Tuning Knobs
7. Store Switch
8. On, OFF, VOLUME Control
9. SQUELCH Control
10. CLARIFIER Control

A95BWO3C0369C

Figure 3-4. HF Communications Transceiver Control Unit

emission mode selector switch set to the **USB** or **AM** position). Transmitter operation **(TX)** is shown at the right end of this display. The lower line of the display shows the last four digits of the operating frequency (with the emission mode selector switch set to the **USB** or **AM** position).

(2) Photocell. A photocell located to the right of the display senses ambient light conditions and adjusts display brightness accordingly.

(3) Store switch. A momentary push button switch placarded **STO,** is used to store in memory the displayed data when programming preset channels. When the **STO** switch is pressed simultaneously with a microphone transmit switch, a 1000 Hz operator attention tone will be transmitted (required by some Canadian radiotelephone stations).

(4) Frequency/channel selector knob. The frequency/channel selector knob (inner concentric with the emission mode selector switch) allows the pilot to set channels and frequencies, and serves as a clarifier control in sideband mode. Depressing the control knob causes the flashing cursor on the display to move to the digit that the pilot desires to change. Each time the control is depressed, the cursor moves forward to the next digit. The digit at the cursor position is changed by rotating the channel/ frequency selector knob.

(5) Emission mode selector switch. The emission mode switch, placarded **LSB, USB, AM,** and **TEL (A3J)** (concentric with the frequency/selector knob) is used to select the operating mode of the HF transceiver.

(6) Squelch control. A knob placarded **SQ** (outer concentric with the off/volume control knob) provides a variable squelch threshold control. This control is used to help reduce background noise when a signal is not being received.

(7) On, off, volume control. A knob placarded **OFF, VOL** (inner concentric with the squelch knob) is used to turn the transceiver on and off, and adjust volume. Clockwise rotation from the detent applies power to the system, Further clockwise rotation increases audio output level.

c. Frequency Selection. The HF system has two methods of frequency selection: direct tuning mode and channel mode.

(1) Direct tuning mode. In the direct tuning mode the desired frequency is set into the display using the frequency/channel selector knob, and stored in memory. Only simplex operation is allowed while operating in the direct tuning mode.

(2) Channel mode. When the HF control unit is in the channel mode, channels and their respective frequencies are changed using the frequency/channel selector knob. Frequencies in the Channel mode are stored with channel number, emission mode **(USB** or **AM),** and transmit and receive frequency.

(a) Simplex operation. The operator programs the same frequency for receive and transmit. The simplex function is used by air traffic control, ARINC, and others.

(b) Semi-duplex. In semi-duplex operation the operator programs two different frequencies, one for transmit and one for receive. The semi-duplex function is used by maritime radiotelephone network (public correspondence) stations.

d. HF Communications Transceiver Operation.

(1) Direct frequency tuning operation (simplex only).

1. Emission mode selector switch - **USB** or **AM.**
2. Frequency/channel selector switch - Turn knob until a flashing 0 appears in the display. HF system is now in direct tuning mode.
3. Frequency/channel selector switch - Depress repeatedly until cursor is at digit to be changed.

NOTE

The first one or two digits (MHz) of the frequency are shown on the upper right portion of the display, while the last four digits (kHz) of the frequency are displayed on the bottom of the display.

4. Frequency/channel selector switch - Turn knob until desired number has been selected. The 0 in channel display will become blank.
5. Continue moving cursor and changing digits until desired frequency appears in display.
6. Frequency/channel selector switch - Stow cursor by depressing repeatedly until no digit is left flashing.

NOTE

Keying the microphone momentarily will also stow the cursor.

7. Antenna coupler - Tune by keying radio momentarily. During antenna coupler tuning process, **TX** on display will flash and frequency numbers will be blank.
8. When **TX** annunciator stops flashing and frequency reappears, antenna tuning cycle is complete and radio is ready to transmit on the selected frequency.

NOTE

Always key the radio after selecting a new frequency to initiate antenna tuning. Otherwise poor reception or failure to hear a ground station which is calling you may be experienced.

(2) Programming simplex preset channels.

1. Emission mode selector switch - **USB** or **AM.**
2. Frequency/channel selector switch - Depress repeatedly until Channel number is flashing.
3. Frequency/channel selector switch - Twist to select desired channel number. Previously programmed receive frequency associated with that channel number will appear in display.
4. Frequency/channel selector switch - Depress repeatedly until cursor is at digit to be changed.

NOTE

The first one or two digits (MHz) of the frequency are shown on the upper right portion of the display, while the last four digits (kHz) of the frequency are displayed on the bottom of the display.

5. Frequency/channel selector switch - Twist knob until desired number has been selected. A flashing dash will appear to right of channel number to indicate that transceiver is in program mode.
6. Continue moving cursor and changing digits until desired frequency appears in display.

NOTE

The program mode may be exited at any time and the previously stored frequency returned by keying the microphone.

7. Store switch - Depress to store frequency in receive portion of memory. **TX** annunciator will flash to indicate that memory is ready to receive transmit frequency.
8. Store switch - Depress a second time to store frequency in the transmit portion of the memory if entering a simplex frequency.
9. If entering a semi-duplex frequency, use frequency/channel selector switch to set transmit frequency in display.
10. Store switch - Depress to enter transmit frequency into memory. Cursor will stow and flashing dash will disappear to indicate that HF control-display unit is no longer in program mode.
11. Antenna coupler - Tune by keying radio momentarily. During antenna coupler tuning process, **TX** on display will flash and frequency numbers will be blank.
12. When **TX** annunciator stops flashing and frequency reappears, antenna tuning cycle is complete and transceiver is ready to transmit on the selected frequency.

NOTE

Always key radio after selecting a new frequency to initiate antenna tuning. Otherwise poor reception or failure to hear a ground station which is calling you may be experienced.

(3) Programming semi-duplex preset channels.

1. Emission mode selector switch - **USB** or **AM.**
2. Frequency/channel selector switch - Depress repeatedly until channel number is flashing.
3. Frequency/channel selector switch - Twist to select desired channel number. Previously programmed receive frequency associated with that channel number will appear in the display.
4. Frequency/channel selector switch - Depress repeatedly until cursor is at the digit to be changed.

NOTE

The first one or two digits (MHz) of the frequency are shown on the upper right portion of the display, while the last four digits (kHz) of the frequency are displayed on the bottom of the display.

5. Frequency/channel selector switch - Twist knob until desired number has been selected. A flashing dash will appear to right of channel number to indicate that transceiver is in program mode.

6. Continue moving cursor and changing digits until desired frequency appears in display.

NOTE

The program mode may be exited at any time and the previously stored frequency returned by keying the microphone.

7. Store switch - Depress to store frequency in receive portion of memory. **TX** annunciator will flash to indicate that memory is ready to receive transmit frequency.

8. Frequency/channel selector switch - Depress repeatedly until cursor is at the digit to be changed.

NOTE

The first one or two digits (MHZ) of the frequency are shown on the upper right portion of the display, while the last four digits (kHz) of frequency are displayed on bottom of display.

9. Frequency/channel selector switch - Turn knob until desired number has been selected. A flashing dash will appear to right of channel number to indicate that transceiver is in program mode.

10. Continue moving cursor and changing digits until desired transmit frequency appears in display.

NOTE

The program mode may be exited at any time and the previously stored frequency returned by keying the microphone.

11. Store switch - Depress a second time to store frequency in transmit portion of memory. Cursor will stow and flashing dash will disappear to indicate that HF control-display unit is no longer in program mode.

12. Antenna coupler - Tune by keying radio momentarily. During antenna coupler tuning process, **TX** on display will flash and frequency numbers will be blank.

13. When **TX** annunciator stops flashing and frequency reappears, antenna tuning cycle is complete and transceiver is ready to transmit on selected frequency.

e. Clarifier *Operation.* A clarifier function is provided by the control-display unit which allows the operator to make small adjustments to the receive frequency when operating in the channel mode (simplex or semi-duplex) in the **USB** mode. The clarifier is not normally used in the **AM** mode and cannot be used with the emission mode selector switch in the **A3J** position.

The clarifier helps eliminate unnatural sounds associated with SSB transmission as a result of off-frequency ground station transmissions. Operate clarifier as follows:

1. Frequency/channel selector switch - Depress repeatedly until last digit of receive frequency is flashing.

2. Frequency/channel selector switch - Rotate to increase or decrease last digit of receive frequency by one increment.

3. Received audio quality - Monitor. If recep tion does not improve sufficiently, try additional changes in last digit.

NOTE

If transmission is made while using clarifier, transmission will be on the originally selected frequency. The dash to the right of the channel number will not flash and the transceiver will not be in the program mode.

4. To exit clarifier mode, depress store switch or return last digit to original frequency selection.

f. Maritime Radiotelephone Network Channel Operation. The memory of the control-display unit has all 176 ITU (International Telecommunications Union) public correspondence channels programmed permanently into its memory. Operation in this mode is as follows:

1. Emission mode selector switch - **A3J.**

2. Frequency/channel selector switch - Depress repeatedly until channel number is flashing.

3. Frequency/channel selector switch Turn to select desired channel number.

4. Frequency/channel selector switch - Depress repeatedly until cursor is at digit to be changed.

5. Frequency/channel selector switch - Turn knob until desired number has been selected.

NOTE

There are only two cursor positions for the ITU channel number. The hundreds position also controls the thousands position. For example, if the displayed channel number is 1204, the cursor could be moved to the 12 but not the 1. With the cursor in the 12 position, turning the frequency/channel selector one step counterclockwise will change the 12 to an 8, while another step in the same direction will change 8 to a 6. This is consistent with the actual channel numbers.

6. Antenna coupler - Tune by keying radio momentarily. During antenna coupler tuning process, **TX** on display will flash and frequency numbers will be blank.

7. When **TX** annunciator stops flashing and frequency reappears, antenna tuning cycle is complete and transceiver is ready to transmit on selected frequency.

NOTE

Always key microphone after selecting a new frequency to initiate antenna tuning. Otherwise poor reception or failure to hear a ground station which is calling you may be experienced.

Before keying the microphone to talk, you should depress the store **(STO)** switch momentarily. This will allow you to listen on the transmit frequency to see if another aircraft is calling the same ground station.

Some Canadian public correspondence stations require the reception of a 1,000 Hz signal from an aircraft calling the station before it will answer. This signal may be sent by keying the radio and then simultaneously depressing the store **(STO)** switch.

3-10. AIRBORNE TELEPHONE SYSTEM.

The airborne telephone system consists of a remote transceiver, a telephone base and handset located in the passenger compartment, and an antenna.

The transceiver operates in the UHF band at frequencies of 454.675 to 454.975 MHz (receiver section) and 459.675 to 459.975 MHz (transmitter section). Transmitter power output is a nominal 10 watts, The maximum operating altitude is a nominal 51,000 feet. Although the theoretical maximum range at 31,000 feet altitude is 220 nautical miles, the range is essentially limited to line-of-sight, and may be reduced depending upon the altitude of the aircraft, weather, type of terrain, and the location and altitude of the ground transmitter. The system is protected by a 5-ampere **RADIO PHONE** circuit breaker located on the right sidewall circuit breaker panel (fig. 2-7).

a. Airborne Telephone System Controls, Indicators, and Functions (fig. 3-5).

(1) Telephone base unit. The following items are located on the telephone base unit:

(a) Hookswitch. When depressed by placing handset in cradle, puts system in standby mode and deactivates transmitter.

(b) Intercom lamp (IC). While handset is in cradle, illuminates to indicate power is on. When handset is removed from cradle, illuminates to indicate system is in intercom mode.

(c) Direct dial /amp (D/D/AL). Illuminates to indicate an AGRAS station with direct dial service has been selected.

(d) HF/BELL OFF/PHONE switch. Selects between **HF** and **PHONE** modes. Center position selects ringer **ON** or **OFF.**

(e) Transmit lamp (TX). Illuminates to indicate transmitter is activated.

(2) Telephone handset. The following items are located on the telephone handset:

(a) PTT switch. When system is in **HF** mode, functions as a push-to-talk/release-to-receive switch. When handset is in cradle, functions as a release button to unlock handset from base unit.

(b) Numerical keys. Depressed to select channels and telephone numbers.

(c) Enter (pound) key. When depressed, immediately enters a channel number or telephone number.

(d) Clear (star) key. When depressed, clears input in progress without entering.

(e) Hookswitch. When depressed, puts system in standby mode and deactivates transmitter.

(f) Volume control. Rotates to adjust volume of handset speaker.

b. Airborne *Telephone* System *Operation. The* airborne telephone system may be used either in **HF** mode or in **PHONE** mode. The **HF** mode permits the handset to be used as a microphone/speaker in conjunction with the aircraft's **HF** communications set to provide standard two-way radio communications in the **HF** band. The **PHONE** mode provides communications very similar to ground-based telephone service, operating on 13 channels (12 telephone channels plus one ground-to-air calling channel).

Telephone calls may be placed either with assistance from an operator at a manned ground station or direct-dialed through Air/Ground Radiotelephone Automated Service (AGRAS) stations. When the handset is removed from the base, the set will automatically scan each channel for ground stations in range of the aircraft and will select one in the following order of preference:

Idle AGRAS stations

Idle manned ground stations

Busy AGRAS stations

Busy manned ground stations

Busy AGRAS stations with queueing capability

If no ground station is available, a busy signal will sound in the handset.

(1) Air to ground calling.

1. Handset - Remove from base.
2. Handset - Listen to audio to determine which one of the following dialing procedures to use.

(a) *Dial tone (D/DIAL light illuminated).*

1. Phone number - Enter using numeric keys,
2. Handset - Listen for queue or camp on tone.
3. Handset - Hang up and wait for phone to ring.

NOTE

Phone will ring when first usable station is received.

4. Handset - Pick up when phone rings. Call is placed automatically.

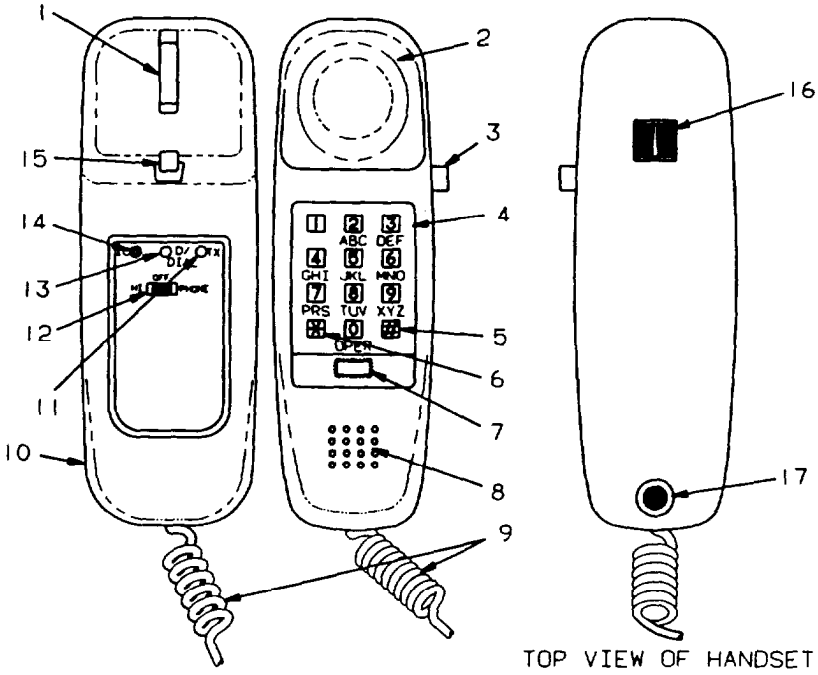

1. Base Unit Hookswitch
2. Handset Speaker
3. Press-To-Talk Switch (PTT)
4. Numerical Keys
5. Enter Key
6. Clear Key
7. Handset Hookswitch
8. Noise Cancelling Microphone
9. Coiled Cord
10. Base Unit
11. Transmit Lamp (TX)
12. HF - Bell Off - Phone Switch
13. Direct Dial Lamp (D/DIAL)
14. Intercom Lamp (IC)
15. Handset Locking Post
16. Volume Control
17. Noise Concelling Tube

A95BWO3C0487C

Figure 3-5. Airborne Telephone

NOTE

Depress star key to cancel queue if desired.

(b) High pitched tone. No direct dial station is available. The strongest operator assisted station has been selected.

1. **OPER** switch - Depress to call mobile operator.
2. When mobile operator responds:

Give billing information.

Give telephone number that you are calling or:

Place telephone in queue (camp on) and wait for direct dial station.

(c) Voice conversation. No direct dial station is available. The strongest operator assisted station has been selected and its channel is in use.

1. Handset - Hang up and try later or:
2. Place telephone in queue (camp on) and wait for direct dial station.

3-11. EMERGENCY LOCATOR TRANSMITTER (ELT 110-4).

a. Description. An automatic or manually activated emergency locator transmitter (ELT, fig. 3-6) is located in the left side of the aft fuselage. The associated antenna is mounted on top of the aft fuselage. The transmitter contains a **G** switch which automatically activates the transmitter following a velocity change of 3.5 feet per second. When activated, the ELT will radiate omnidirectional radio frequency signals on the international distress frequencies of 121.5 and 243.0 MHz. The radiated signal is modulated with an audio swept tone. Internal batteries provide transmitter operation for a minimum of 50 hours at -20°C.

NOTE

On aircraft serial numbers 92-3327, 92-3328, and 92-3329, an access hole with spring-loaded cover is located in the fuselage skin adjacent to the transmitter, enabling a downed pilot to manually initiate or terminate operation, or reset the ELT to an armed mode.

b. Remote Switch and Indicator Light. The remote switch and indicator light are located on the left sidewall next to the free air temperature indicator (fig. 2-8).

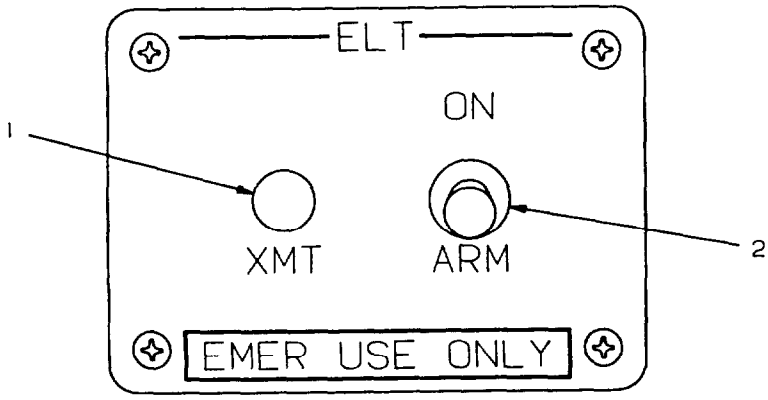

1. Transmit Indicator Light
2. ON-ARM Switch

A95BWO2CO529 C

Figure 3-6. Emergency Locator Transmitter Control Panel

The ELT annunciator (placarded **XMIT)** illuminates to indicate that the ELT is transmitting. The remote switch is placarded **ON** - **ARM.**

(1) ON. Initiates emergency signal transmissions for test or for emergency purposes.

(2) ARM. Used to **ARM** the ELT or reset it after an accidental activation.

c. Normal Operation. During normal operation the remote switch is in the **ARM** position.

d. Emergency Operation. The ELT may be manually activated by moving the remote switch to the **ON** position.

e. Resetting the ELT. If the ELT is activated accidentally, it will need to be reset. Do this by moving the remote switch up to the **ON** position and holding it there for one second, then immediately rocking it down to the **ARM** position, then releasing the switch.

3-12. COCKPIT VOICE RECORDER SYSTEM.

a. Description. The cockpit voice recorder system is a solid-state system consisting of a cockpit voice recorder and a control unit (fig. 3-7). The cockpit voice recorder system provides four separate channels for voice recording which originate at the pilot's audio amplifier, the copilot's audio amplifier, the aural annunciator audio amplifier, and the area microphone in the cockpit. The cockpit area microphone is strategically located to pick up cockpit voice signals. The control unit (containing the preamplifier, TEST switch, and ERASE switch) is located in the pedestal extension (fig. 2-12). The cockpit voice recorder system is protected by a 5-ampere circuit breaker placarded VOICE RCDR, located on the right sidewall circuit breaker (fig. 2-7).

(1) Cockpit voice recorder. The cockpit voice recorder records all voice signals transmitted or received by crew members for a maximum period of 30 minutes continuous operation. After 30 minutes of continuous operation the voice recordings are erased. The cockpit voice recorder is housed in an orange equipment case which is designed to protect the recordings from damage resulting from an accident.

b. Cockpit Voice Recorder Controls, Indicators, and Functions.

(1) Test meter. The test meter provides an indication of the relative strength of voice signals coming from the cockpit microphone or audio amplifiers.

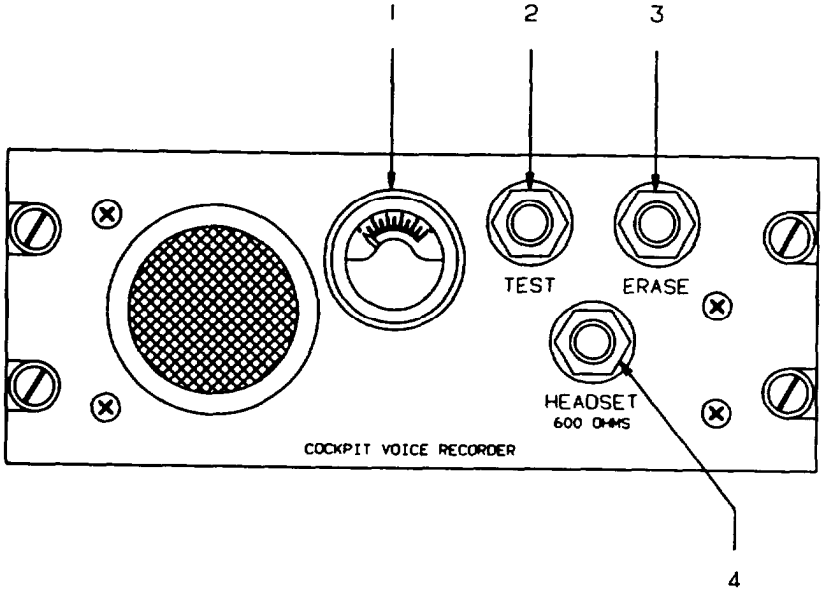

1. Test Meter
2. TEST Switch
3. ERASE Switch
4. HEADSET Jock

A96BWOOC0331 C

Figure 3-7. Cockpit Voice Recorder Control Panel

(2) TEST switch. A pushbutton switch placarded TEST provides a means of testing the area microphone channel.

(3) ERASE switch. A pushbutton switch placarded ERASE is used to erase all recordings after a routine flight. The ERASE switch will only work when the weight of the aircraft is on the landing gear. To prevent accidental erasures, a time-delay circuit makes it necessary to hold the ERASE switch depressed for two seconds before the erasure process will begin.

(4) HEADSET jack. A jack placarded HEADSET 800 OHMS allows playback of all four recording channels simultaneously.

Section III. NAVIGATION

3-13. NAVIGATION EQUIPMENT GROUP DESCRIPTION.

The navigation equipment group provides the pilot and copilot with instrumentation required to establish and maintain an accurate flight course and position, and to make an approach on instruments under Instrument Meteorological Conditions (IMC). The navigation configuration includes equipment for determining attitude, position, destination range and bearing, heading reference, and ground-Speed.

3-14. AUTOMATIC FLIGHT CONTROL SYSTEM (KFC 400C).

The automatic flight control system provides fully digital, dual channel, fail passive operation in flight director, autopilot, yaw damper, and trim functions.

The pilot can couple either the left or right electronic flight instrument system (EFIS) to either automatic flight control system for control of the aircraft.

The dual flight control computers provide digital processing of heading, navigation, and air data information to satisfy the pilot's requirements. The data is presented to the pilots on the altitude and vertical speed indicators and the electronic flight instrument system (EFIS).

The flight control system displays heading, course, radio bearing, pitch and roll attitude, barometric altitude, selected alert altitude, radio altitude, short and long range navigation, course deviation, glideslope deviation, to-from indication, TACAN distance and course indications, and VOR-DME distance information. Display of weather radar and lightning sensor system information on the electronic horizontal situation indicators (EHSI) is also provided.

Lighted annunciators denote selected flight mode, altitude alert, decision height, and go-around mode engagement. Pitch, roll steering commands, and heading are displayed on the electronic attitude director indicators (EADI).

The pilot's and copilot's symbol generators are the focal point of information flow in the systems. The symbol generator converts information to video and deflection formats required by the EADI and EHSI displays, and provides analog steering information to the flight director/autopilot interfaces.

When engaged and coupled to the flight director commands, the flight control system will control the aircraft using the same commands displayed on the EADI. When engaged and not coupled to the flight director commands, manual pitch and roll commands may be inserted using the control wheel steering (CWS) switch on the pilot's or copilot's respective control wheel or the autopilot pitch wheel and turn knob located on the pedestal extension.

3-15. ATTITUDE AND HEADING REFERENCE SYSTEM.

The attitude and heading reference system consists of the vertical gyros, directional gyros, dual remote compensator, and flux valves.

The vertical gyros provide the digital flight control system, electronic flight instrument system, and weather radar antenna with pitch and roll information.

The directional gyros, with the flux valve and compensator, provide stabilized magnetic north referenced heading information for use by the digital flight control computer and electronic flight instrument system.

3-16. AIR DATA SYSTEM.

The digital air data computers are microprocessor-based digital computers which accept both analog and digital inputs, perform digital computations, and supply both digital and analog outputs. They receive both pitot and static pressure for computing standard air data functions. They control autopilot gains as a function of altitude and airspeed. They contain sensors for the flight director modes, altitude hold, vertical speed/indicated airspeed/altitude preselect, and true airspeed for the flight management system. They also include the sensor function for the altitude portion of the altitude and vertical speed indicator. The altitude encoder for the mode C function of the transponder is also in the air data computer.

3-17. ELECTRONIC FLIGHT INSTRUMENT SYSTEM (EFIS).

a. Description. The electronic flight instrument system consists of the pilot's and copilot's electronic attitude director indicators (EADI) and electronic horizontal situation indicators (EHSI) display units, symbol generators, and EFIS control panel.

The EFIS electronic displays present pitch and roll attitude, heading, course orientation, flight path commands, radio altitude, weather radar and lightning sensor system presentations, and mode and source annunciations. The displays are color-coded as shown in table 3-1 for easier interpretation of information.

b. Electronic Flight Instrument System (EFIS) Preflight Test.

NOTE

Performing the EFIS self test is not required at any time. If a failure exists, the small red SG in a red box will be displayed. The self test is intended to familiarize the pilot with the display flags, and for checking proper display color.

1. **BRT** control - Set desired brightness.
2. **TST/REF** pushbutton switch - Depress for three seconds. **A SELF TEST PASS** or **SELF TEST FAIL** message will be annunciated.

NOTE

A white color on the compass scale indicates that all three colors are operational in the display unit.

3-18. EFIS STANDBY POWER SYSTEM.

The EFIS standby power system provides standby electrical power for EFIS system operation when aircraft electrical power is unavailable. The EFIS standby power system control panel is located on the instrument panel (fig. 2-16). A pushbutton switch on the control panel placarded TEST initiates self test. A switch-indicator placarded ARM TEST on the top half and ARM on the bottom half is used to select or deselect the armed condition of the system, indicates if self test is in progress, and indicates whether the system is armed or not. The standby EFIS power system is protected by a 15-ampere circuit breaker placarded EFIS AUX BAT, located on the right sidewall circuit breaker panel (fig.2-7).

3-19. EFIS CONTROL PANEL

a. Description. The EFIS control panel (fig. 3-7) enables each pilot to control formatting on his respective EHSI and EADI, and to select the source of navigation, attitude, and heading information.

Table 3-1. EFIS Display Color Codes

COLOR	TYPE OF INFORMATION
Red	Warnings
Yellow	Cautions or abnormal source; Cross-side navigation data; Cross-side commanded data; Cross-side selected active route/flight plan
Green	On-side approach and navigalion data; On-side commanded data; Selected active route/flight plan Scales and associated figures; Held DME distance display
Cyan	On-side non-approach navigation data (LNAV)
Orange	Selected heading/DME HOLD annunciation
Matches NAV data color	Selected source

BTO5550

b. EFIS Control Panel Controls, Indicators, and Functions:

(1) Radio altimeter decision height set knob. The radio altimeter decision height set knob, placarded **DH,** is used to set the desired decision height in feet that is shown in the green **DH** display located in the lower left comer of each EADI. To set the decision height, the knob must first be pulled out, then turned clockwise to increase the selected decision height or counterclockwise to decrease the selected decision height. The decision height set knob is variable rate, that is, turning the knob further in either direction will increase the rate of change in selected decision height. The decision height selection range is from OFF (-1 foot) to 2500 feet.

Push the **DH** knob back in after the decision height has been set to lock the selected **DH** altitude. If the **DH** is set to **OFF** the **DH** annunciator will not be displayed on the EADI.

(2) HSI 360 degree pushbutton selector switch. The HSI 360 degree pushbutton selector switch, placarded HSI, is used to select one of four possible 360-degree formats for the HSI. Each depression of the HSI switch sequences to the next display format. The four possible 360 degree HSI formats are as follows:

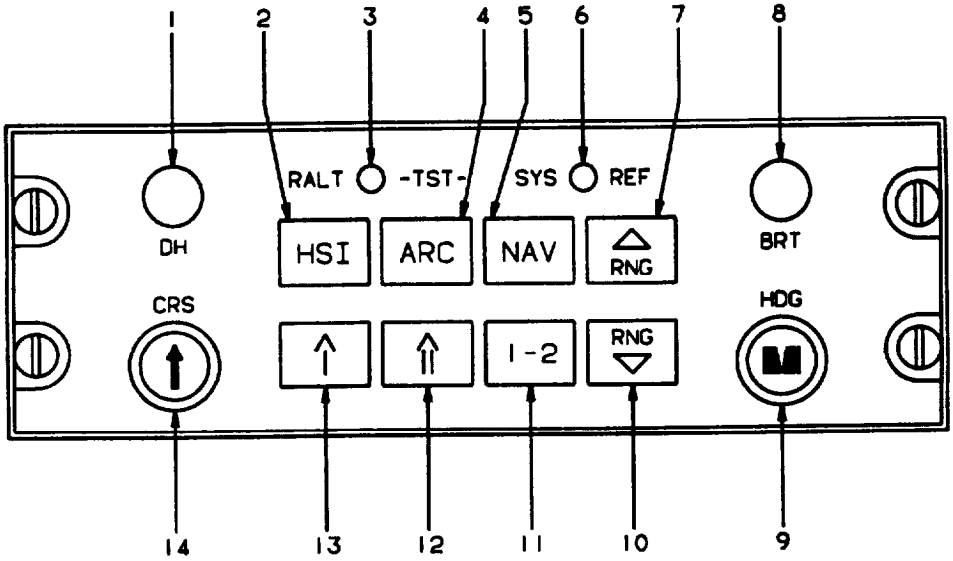

1. Radio Altimeter Decision Height Set Knob
2. HSI 360 Degree Pushbutton Selector Switch
3. Radio Altimeter Pushbutton Test Switch
4. HSI ARC Pushbutton Selector Switch
5. Navigation Source Pushbutton Selector Switch
6. System/Reference Pushbutton Test Switch
7. Range Up Switch
8. Brightness Control
9. Heading Select Knob Range Down Switch
10. Primary Navigation Sensor System
11. Pushbutton Selector Switch
12. HSI Double Needle Bearing Pointer Source Pushbutton Selector Switch
13. HSI Single Needle Bearing Pointer Source Pushbutton Selector Switch
14. HSI Course Select Knob

A958W03C0379 C

Figure 3-8. EFIS Control Panel

Standard HSI compass rose.

Navigation map.

Navigation map with weather radar display.

Directional gyro mode.

(3) Radio altimeter pushbutton test switch. Depressing the radio altimeter test switch, placarded **RALT TST,** provides a discrete output to the radio altimeter initiating its self test function.

(4) HSI arc pushbutton selector switch. The arc pushbutton selector switch, placarded **ARC,** is used to select one of five possible 85-degree arc formats for the HSI. Each depression of the HSI switch sequences to the next display format. The four possible arc formats are as follows:

Arc compass rose.

Arc navigation map.

Arc navigation map with weather radar display.

Arc compass rose with weather radar display.

(5) Navigation source pushbutton selector switch. Depressing the navigation source pushbutton selector switch, placarded **NAV,** sequentially selects the next navigation sensor from the list of those installed. An annunciator on the EADI displays the selected sensor. Possible primary navigation sources are: **VOR, LOC, TCN, FMS, GPS,** and **ADF.**

(6) System/reference pushbutton test switch. The system/reference pushbutton test switch, placarded **SYS REF,** initiates EFIS system self test.

(7) Range up Switch. Depressing the range up switch, placarded **RNG,** will select the next higher range to be displayed on the EHSI while in the **NAV MAP** or **WEATHER** modes. Once the highest selectable range has been reached, the range down switch must be used to change range.

(8) Brightness control. The display brightness control, placarded **BRT,** provides full range dimming for night operation in no or low light situations.

NOTE

The lower limit of display brightness may appear as an inoperative tube during normal daylight operation.

(9) Heading select knob. Rotation of the heading select knob, placarded **HDG,** allows positioning the heading marker on the EHSI and EADI at the desired heading. Pulling out on the heading select knob will cause the heading marker on the EHSI and EADI to move to the present aircraft heading (lubber line).

(10) *Range down switch.* Depressing the range down switch, placarded **RNG,** will select the next lower range to be displayed on the EHSI while in the **NAV MAP** or **WEATHER** modes. Once the lowest selectable range has been reached, the range up switch must be used to change range.

(11) Primary *navigation sensor system pushbutton selector switch.* The primary navigation sensor system pushbutton selector switch, placarded **1-2,** is used to select either primary navigation sensor system #1 or #2 for display on the EFIS system. The primary NAV system selected is annunciated as sensor **1** or **2** on the EHSI. For example, if VOR 1 is being displayed and the **1-2** switch is depressed, VOR 2 will become the displayed sensor. If only one sensor is installed, the display will not cycle and the sensor annunciation will not show a system number. For example, **ADF** is displayed (not **ADF 1),** since only one ADF is installed.

(12) HSI double needle bearing pointer source pushbutton selector *switch.* Depressing the HSI double needle bearing pointer source selector switch selects the next available sensor for display. The bearing pointer sensor list contains only those sensors which have bearing information capabilities. If the selected sensor has distance information paired with it, that distance will also be displayed below the sensor annunciation. Possible sensors for the double needle bearing pointer are as follows:

DECLUTTER (no number one or number two bearing pointer information is displayed).

VOR

TCN

LNAV (GPS)

ADF

DME number one (distance only)

(13) HSI single needle bearing pointer source pushbutton selector switch. Depressing the HSI single needle bearing pointer source selector switch selects the next available sensor for display. The bearing pointer sensor list contains only those sensors which have hearing information capabilities. If the selected sensor has distance information paired with it, that distance will also be displayed below the sensor annunciation. Possible sensors for the single needle bearing pointer are the same as for the double needle bearing pointer.

(14) HSI course select knob. Rotation of the course select knob, placarded **CRS,** allows the course

pointer and digital course to be set to the desired course. pulling the course select knob out will cause the course pointer and digital course readout on the EHSI to change to the direct course to the selected navaid or active waypoint.

3-20. ELECTRONIC ATTITUDE DIRECTOR INDICATOR (EADI).

a. Description. The EADI (figs. 3-8 and 3-9) combines a sphere-type attitude display with lateral and vertical computed steering signals to provide commands required to intercept and maintain a desired flight path. The EADI provides the following display information:

Attitude display

Flight director command cue

Flight director mode annunciations

Heading

Vertical deviation

Expanded localizer

Radio altitude with rising runway display

Decision height setting and annunciations

Marker beacon annunciations

Air data command

Rate of turn

Reversionary annunciations

Flags

Comparison monitors

b. EADI Controls, Indicators, and Functions (fig. 3-70).

(1) Autopilot/yaw damper *mode annunciators.* The autopilot/yaw damper mode annunciators are located in the upper left corner of the EHSI.

(a) AP mode annunciator. The **AP** mode annunciator illuminates green to indicate that the autopilot is engaged. If the autopilot has been engaged and then disengaged, a flashing red **AP** will be annunciated. A yellow horizontal arrow under the **AP** annunciator will be displayed on the inactive side (side not controlling the aircraft), pointing toward the active side.

(b) YD mode annunciator. The **YD** mode annunciator illuminates green to indicate that the yaw damper is engaged.

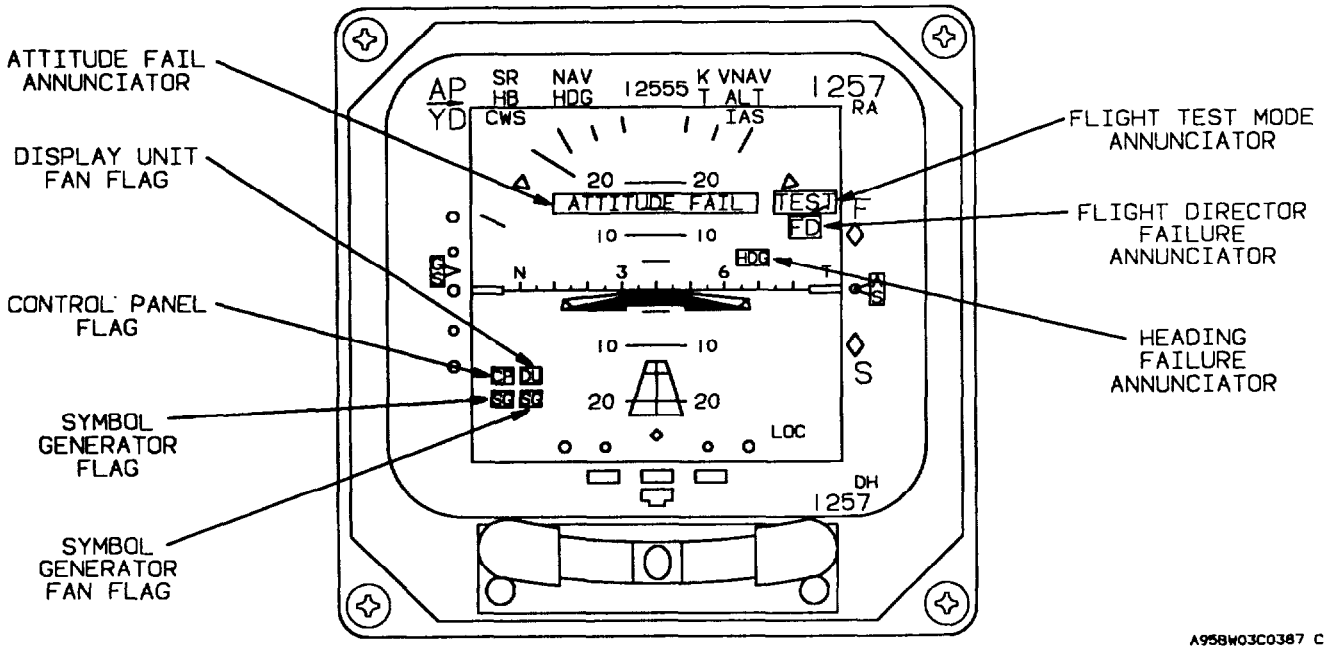

Figure 3-9. EADI Fault Annunciators

(c) SR mode annunciator. The **SR** mode annunciator illuminates green to indicate that soft ride mode has been selected on the autopilot controller.

(d) HB mode annunciator. The **HB** mode annunciator illuminates green to indicate that half bank mode has been selected on the autopilot controller.

(e) CWS mode annunciator. The **CWS** mode annunciator illuminates green to indicate that the control wheel steering switch on a control wheel is being held depressed, allowing the aircraft to be maneuvered with the autopilot servos disengaged allowing the pilot to synchronize flight director commands in pitch and roll.

(2) Autopilot/flight director lateral mode annunciators. The autopilot/flight director lateral mode annunciators are located on the upper portion of the EADI to the right of the autopilot/yaw damper annunciators.

(a) HDG mode annunciator. Illumination of the heading mode annunciator, placarded **HDG,** indicates that the heading **(HDG)** mode has been selected and is engaged.

(b) NAV (arm) mode annunciator. Illumination of the white navigation arm mode annunciator, placarded **NAV,** indicates that navigation mode on the flight director mode selector panel has been selected and is in an armed condition.

(c) NAV mode annunciator. Illumination of the green navigation mode annunciator, placarded **NAV,** indicates that navigation mode on the flight director mode selector panel has been selected and is engaged.

(d) LOC (arm) mode annunciator. Illumination of the white localizer mode annunciator, placarded **LOC,** indicates that the localizer mode on the flight director mode selector panel has been selected and is in an armed condition.

(e) LOC mode annunciator. Illumination of the green localizer mode annunciator, placarded **LOC,** indicates that the localizer mode on the flight director mode selector panel has been selected and is engaged.

(f) APR (arm) mode annunciator. Illumination of the white approach arm mode annunciator, placarded **APR,** indicates that the approach mode on the flight director mode selector panel has been selected and is in an armed condition.

(g) APR mode annunciator. Illumination of the green approach mode annunciator, placarded **APR,** indicates that the approach mode on the flight director mode selector panel has been selected and is engaged.

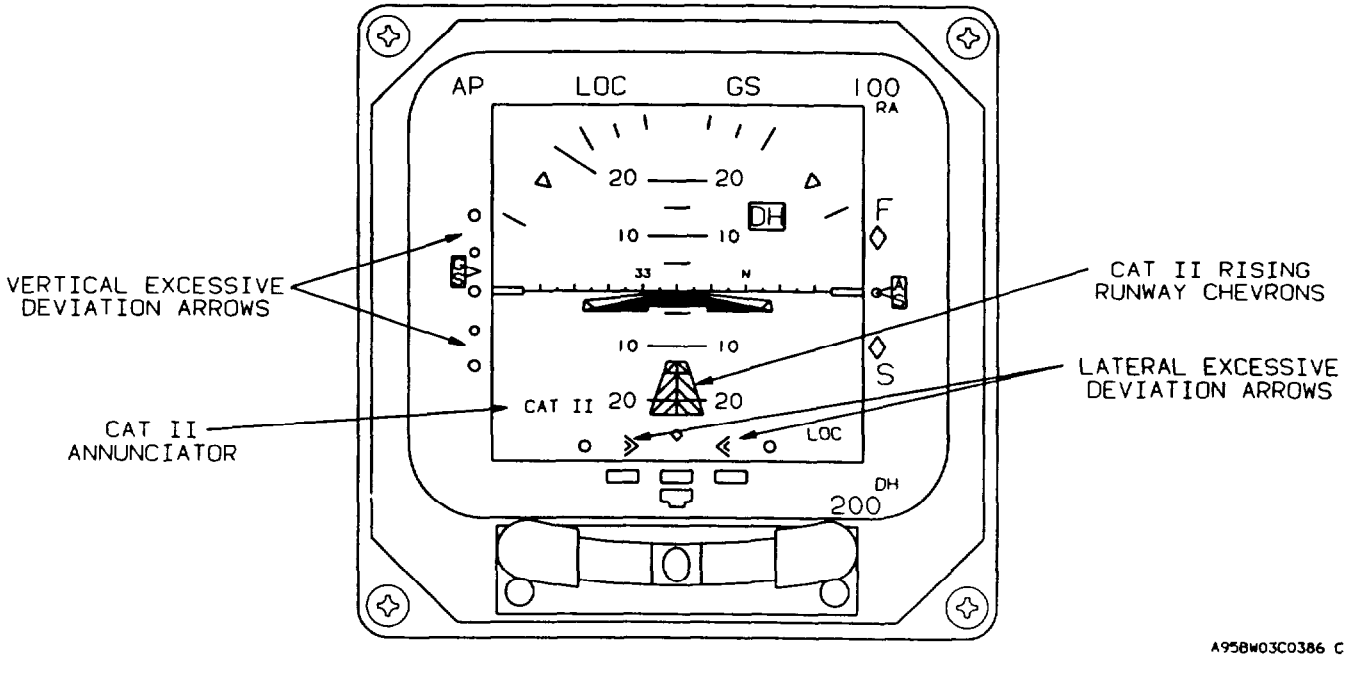

Figure 3-10. EADI Category II Symbology

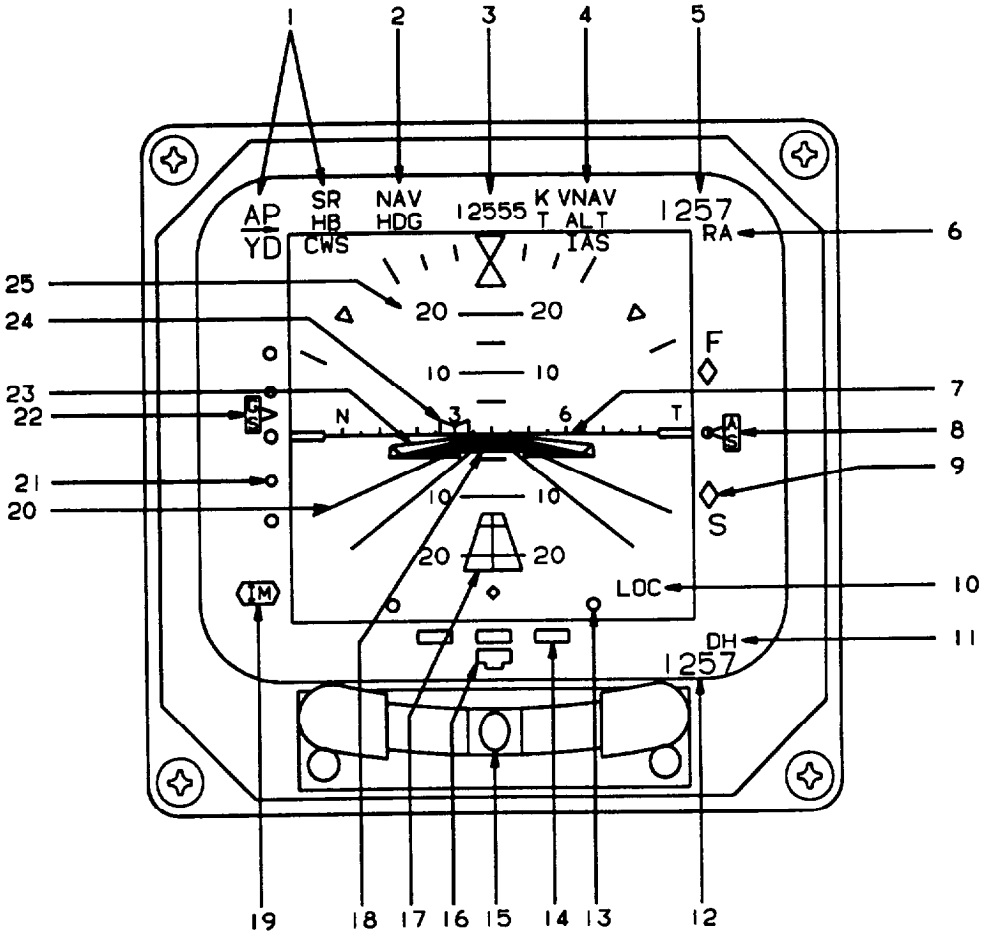

1. Autopilot/Yaw Damper Mode Annunciators
2. Autopilot/Flight Director Lateral Mode Annunciators
3. Autopilot Command Data Display
4. Autopilot/FLight Director Vertical Mode Annunciators
5. Radio Altimeter Digital Altitude Display
6. Radio Altimeter Annunciator
7. Horizon Line With Hooding Scale
8. Airspeed Fast/Slow or Angle of Attack Indicator
9. Airspeed Fast/Slow or Angle of Attack Scale
10. Lateral Devtation Scale Annunciator
11. Decision Height Annunciator
12. Decision Height Digital Display
13. Lateral Deviation Scale
14. Rate of Turn Scale
15. Inclinameter
16. Rate of Turn Indicator
17. Radio Altimeter Rising Runway Indicator
18. Delta Aircraft Symbol (For Single-Cue Command Bars)
19. Marker Beacon Annunciators
20. Perspective Lines
21. Vertical Deviation Scale
22. Vertical Deviation Indicator
23. Single-Cue Flight Director Command Bars
24. Heading Marker
25. Pitch Attitude Scale

A958W03C0389C

Figure 3-11. Electronic Attitude Director Indicator (EADI)

(h) BC (arm) mode annunciator. Illumination of the white back course mode annunciator, placarded **BC,** indicates that approach mode on the flight director mode selector panel has been selected for a back localizer course and is in an armed condition,

(i) BC mode annunciator. Illumination of the green back course mode annunciator, placarded **BC,** indicates that approach mode on the flight director mode selector panel has been selected for a back localizer course and is engaged.

(j) ROL mode annunciator, Illumination of the green roll attitude hold mode annunciator, placarded **ROL,** indicates that the roll rate command knob on the autopilot controller has been moved from its center detent position, engaging the roll attitude hold mode.

(3) *Autopilot command data display.* The following autopilot command reference data may be displayed in green on the top center of EADI.

Airspeed - 0 to 512 knots in 1 knot increments.

Mach - 1 to 4.096 math in 0.005 math increments.

Vertical speed - ±20,480 feet per minute in 100 foot per minute increments.

High profile - **H.**

Normal profile - **N.**

Low profile - **L.**

(4) Autopilot/flight director vertical mode annunciators. The autopilot/flight director vertical mode annunciators are located on the upper portion of the EADI to the right of the autopilot command data display.

(a) ALT mode annunciator. Illumination of the green altitude hold mode annunciator, placarded **ALT,** indicates that the altitude hold mode on the flight director mode selector panel has been selected and is engaged.

(b) VS mode annunciator. Illumination of the green vertical speed mode annunciator, placarded **VS.** indicates that the vertical speed mode on the flight director mode selector panel has been selected and is engaged.

(C) IAS mode annunciator. Illumination of the green indicated airspeed hold mode annunciator, placarded **IAS,** indicates that the indicated airspeed hold mode on the flight director mode selector panel has been selected and is engaged.

(d) GS mode annunciator. Illumination of the green glideslope mode annunciator, placarded **GS,** indicates that the approach mode on the flight director mode selector panel has been selected and has captured the glideslope.

(e) GA mode annunciator. Illumination of the green go-around mode annunciator, placarded **GA,** indicates that the **GO AROUND** switch on the left power lever or the **GA** switch on the copilot's control wheel has been depressed and the go-around mode has been initiated.

(f) PIT mode annunciator. Illumination of **the** green pitch mode annunciator, placarded **PIT,** indicates that the vertical trim thumbwheel on the autopilot controller is being operated.

(g) ALTC mode annunciator. Illumination of the green altitude hold capture mode annunciator, placarded **ALTC,** indicates that the selected altitude has been captured.

(h) VNAV *mode annunciator.* Illumination of the green vertical navigation mode annunciator, placarded **VNAV,** indicates that the vertical navigation mode on the flight director mode selector panel has been selected and is engaged.

(i) (H, L, N), CLB mode annunciator. Illumination of the green high, low, or normal climb profile mode annunciators, placarded **H, L, N CLB,** indicates that the high, low, or normal climb profile mode on the flight director mode selector panel has been selected and is engaged.

(j) (H, L, N) DES mode annunciator. Illumination of the green high, low, or normal descent profile mode annunciators, placarded **H, L, N DES,** indicates that the high, low, or normal descent profile mode on the flight director mode selector panel has been selected and is engaged.

(5) Radio altimeter digital altitude display and annunciator. Radio altitude is displayed in the upper right comer of the EHSI in feet above ground level. Radio altimeter operation is indicated by a white **RA** below the radio altitude display.

(6) Horizon line with heading scale. The horizon line displays aircraft pitch and roll attitude with respect to the earth's horizon.

(7) Vertical deviation indicator. The vertical deviation indicator and scale display deviation from the glideslope when on an ILS approach or deviation from a

vertical climb or descent profile when vertical navigation is in use.

(8) Perspective lines. The perspective lines extend downward from the center of the horizon line to provide additional cues during steep turns.

(9) Lateral deviation *scale* annunciator. The lateral deviation scale annunciator displays **LOC** to indicate that localizer information is being provided by the lateral deviation indicator and scale.

(10) Decision height annunciator. The decision height annunciator, placarded **DH,** illuminates when the selected decision height has been reached.

(11) Decision height digital display. The decision height digital display in the lower right corner of the EADI indicates selected decision height.

(12) Lateral deviation scale. The lateral deviation scale, located at the bottom center of the EADI provides a lateral reference for the rising runway symbol when ILS is selected. As an expanded scale it represents 1/2 full scale deviation as displayed on the EHSI. When the selected course and aircraft heading differ by more 105 degrees, the left/right sense will be reversed and **BC** will be displayed to the left of the center diamond to indicate that back course information is being displayed.

(13) *Rare of turn* scale. The rate and direction of turn is indicated by the rate turn scale and pointer and indicator, located at the bottom of the EADI.

(14) Inclinometer. Deflection of the inclinometer ball from the center of the inclinometer tube indicates that the aircraft is in a slipping or skidding turn, depending on turn direction.

(15) Radio altimeter rising runway indicator. The rising runway will be displayed on the EADI when the flight director is in the precision approach mode. The centerline of the rising runway represents the ILS lateral fly to command. If the radio altimeter is providing height above ground level information, the rising runway will start increasing in size at 200 feet AFL and will continue to increase in size to 0 feet AGL.

(16) Delta *aircraft symbol.* The pitch and roll attitude of the aircraft are displayed by the relationship of the fixed delta aircraft symbol and the movable horizon. The symbolic aircraft is flown to satisfy the command cues of the flight director command bars.

(17) Marker beacon *annunciators.* The marker beacon annunciators in the lower left corner of the EADI illuminate when outer marker **(OM),** middle marker **(MM),** or inner marker **(IM)** signals are received.

(18) Airspeed fast/slow or angle of attack indicator and scale. The fast/slow or angle of attack display is located on the opposite side of the EADI from the glideslope display, and consists of two vertical white unfilled diamonds and one white unfilled circle.

The fast/slow scale and indicator will be displayed when the airspeed is within 10 knots more or less than the selected hold airspeed. The scale provides a 40 knot airspeed indication range.

If airspeed is the referenced data, **AS** will be annunciated on the pointer. If angle of attack is the referenced data, **AN** will be annunciated on the pointer.

(19) Sing/e-cue flight director command bars. The command bars indicate where to move the delta aircraft symbol to satisfy the pitch and roll commands computed by the flight director.

(20) Heading marker. The heading marker, located on the heading scale on the horizon line, is used to select the heading to be flown.

(21) Pitch attitude scale. The aircraft's pitch angle with respect to the earth's horizon may be read at the center of the horizon line.

3-21. ELECTRONIC HORIZONTAL SITUATION INDICATOR (EHSI).

a. Description. The electronic horizontal situation indicator (fig. 3-11) combines several displays to provide a map-like display of aircraft position. The indicator displays aircraft displacement relative to a VOR or TACAN radial and localizer and glideslope beam. The EHSI provides the following full and partial compass display information:

(1) Full compass displays (fig. 3-72).

Heading

Course selection

Course or azimuth deviation

Distance

Groundspeed

To/from

Desired track

Bearing

Heading selection

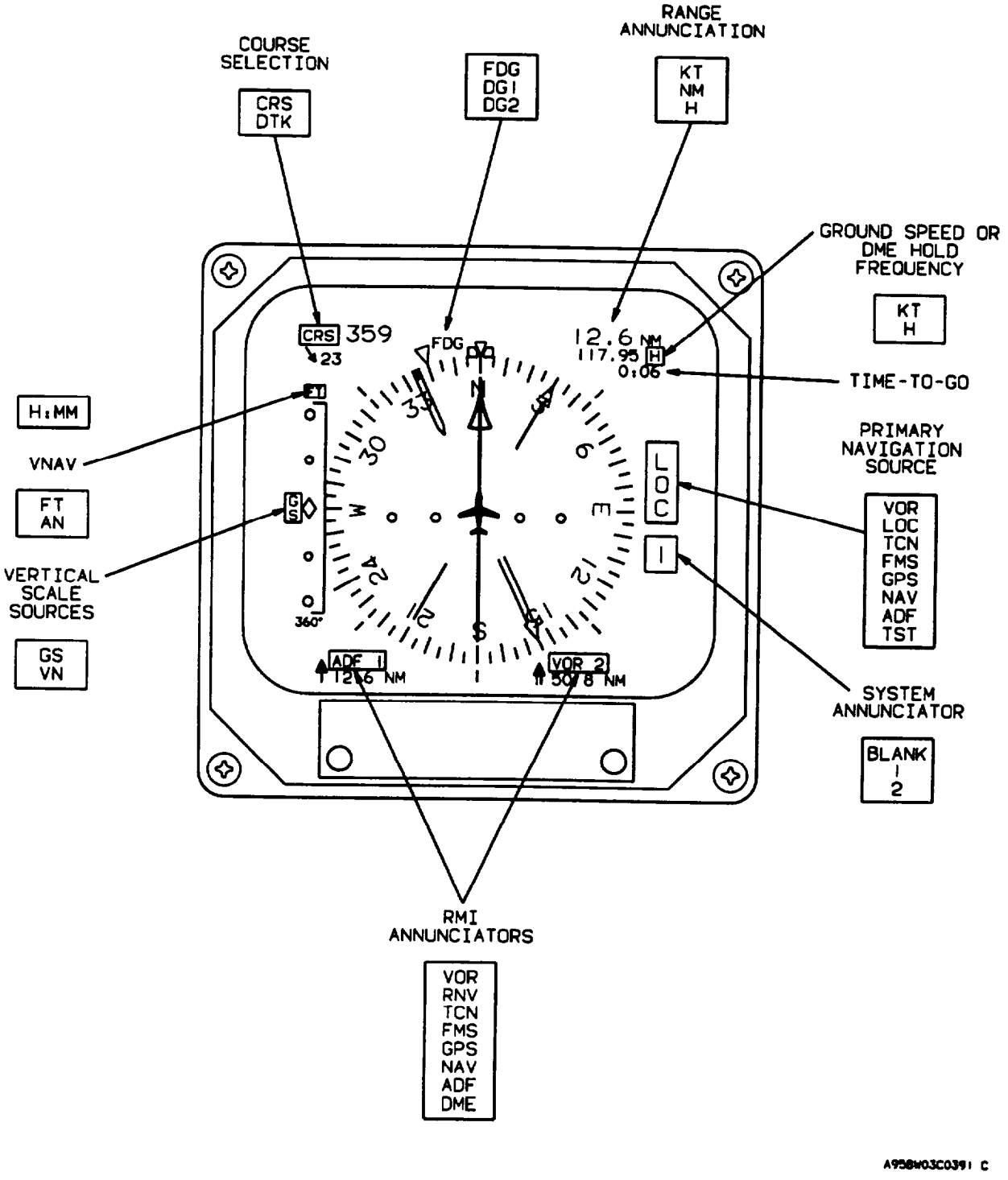

Figure 3-12. Electronic Horizontal Situation Indicator (EHSI) Symbol Definitions

Glideslope deviation

Time-to-go

Heading and navigation source annunciators

Heading synchronization

(2) Partial compass displays (fig. 3-13).

Weather radar

Lightning sensor system data

Navigation map

b. EHSI Controls, Indicators, and Functions (fig. 3-14).

(1) Course/desired track digital *display. The* course/desired track digital display is an alphanumeric display located in the upper left comer of the EHSI. It displays the letters **CRS** followed by the selected navigation course in degrees. The **CRS** knob on the EFIS control panel rotates the course pointer about the compass scale and sets the course/desired track digital display.

(2) Drift angle indicator. The drift angle pointer is a triangular pointer which is generated by the GPS and rotates around the outside of the compass scale. Referenced to the lubber line, the drift angle pointer displays drift angle left or right of aircraft heading. With respect to the compass scale, the drift angle pointer displays actual ground track. Drift angle pointer information is provided by the GPS and will be displayed only when the GPS is selected as the primary navigation source and valid information is present. If the pointer information becomes invalid it will be removed from the display.

(3) Directional gyro mode or source. The directional gyro mode or source annunciator located to the left of the lubber line indicates whether heading information is being supplied to the EFIS from directional gyro number 1 or 2 **(DG1** or **DG2),** or if the system is operating in the free gyro mode **(FHDG).**

(4) Lubber line. Aircraft heading is read from the compass card under the lubber line.

(5) Heading marker. The heading marker is positioned on the compass card by rotating the heading select knob located on the EFIS control panel.

(6) Heading miscompare indicator. The yellow double-ended heading miscompare arrow will be displayed over **HDG** to the left of the lubber line on the EHSI if heading 1, 2, and cross-side differ by more than 6

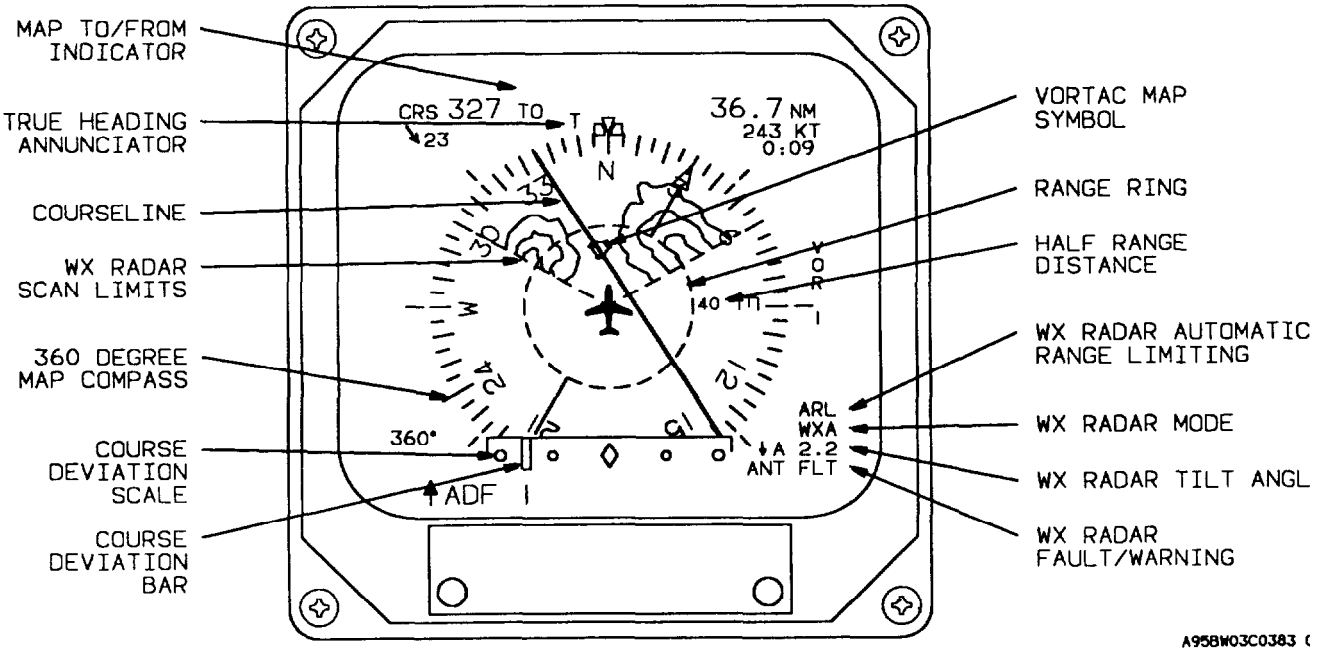

Figure 3-13. EHSI 360° Map Symbol Definitions

degrees up to 6 degrees of bank and by more than 20 degrees above 6 degrees of bank. If bank information is not available the heading miscompare will be displayed if heading differs by more than 20 degrees. The heading miscompare symbol will also be displayed if the failure warning flags differ. Heading miscompare will not be performed if sources are not all magnetic or all true.

(7) Primary navigation source range (or *held* DME distance) The range display for the primary navigation source or DME hold distance is displayed in the upper right corner of the EHSI.

(8) Ground speed or DME hold frequency. Displays ground speed to 999 KTS or DME hold frequency.

(9) *Time to go.* Displays time to station up to 8:31 (H:MM universal format). Time to station is displayed immediately below and at the same time as ground speed.

(10) VNAV mode annunciator. Indicates whether **VNAV** information displayed by the vertical deviation pointer and scale is feet **(FT)** or angle in degrees **(AN).**

(11) Vertical deviation scale and indicator. The vertical deviation scale appears on the left side of the EHSI when **ILS** or **VNAV** is selected. The white vertical deviation scale provides a reference for the vertical deviation indicator. The scale and indicator provide ILS glideslope and vertical navigation **(VNAV)** deviation information. The deviation indicator moves in relation to the scale to indicate glide path center with respect to aircraft position.

(12) Selected heading digital display. When the EHSI is in the 360 degree compass mode, a full time digital readout of the heading selected with the heading select knob is shown on a digital display on the left side of the EHSI below the vertical deviation scale as well as by the heading marker.

(13) Compass card. The compass card indicates aircraft heading referenced to the white triangular heading index (lubber line). The compass scale is divided in 5 degree increments with the 10 degree divisions being approximately twice as long. Fixed 45 degree index marks are adjacent to the compass scale.

(14) Double bar (#2 system) bearing pointer. The double bar (#2 system) bearing pointer points to the selected bearing sensor ground station (or waypoint when in the **LNAV** mode).

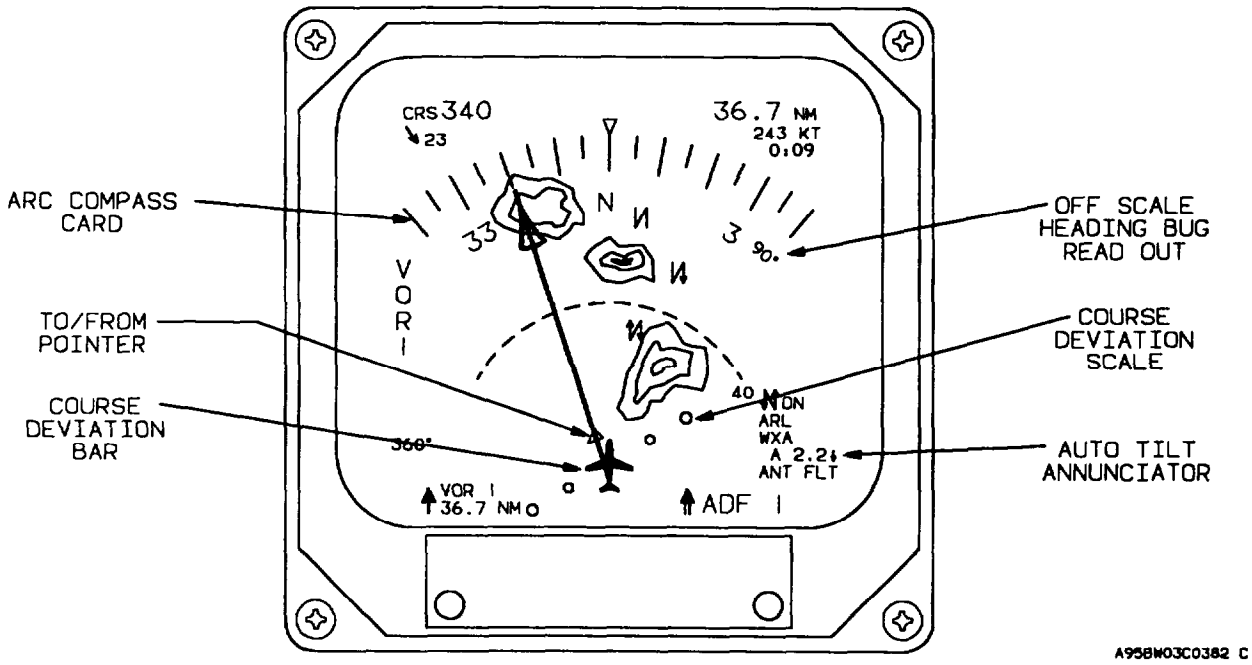

Figure 3-14. EHSI Arc Map Symbol Definition

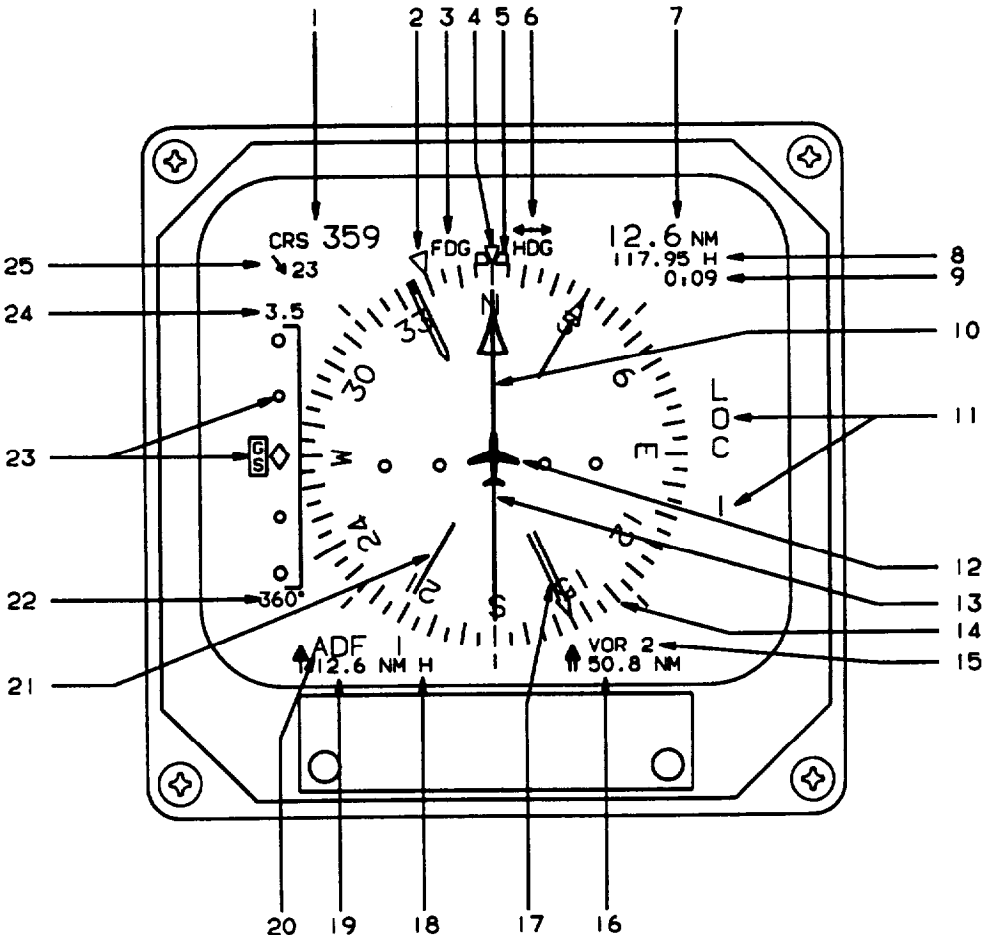

1. Course/Desired Track Digital Display
2. Drift Anglo Indicator
3. Directional Gyro Mode or Source
4. Lubber Line
5. Hooding Marker
6. Hooding Miscompare Indicator
7. Primary Navigation Source Range (or Hold DME Distance)
8. Ground Speed or DME Hold Frequency
9. Time to Go
10. Course Pointer
11. Primary Navigation Source and System Number Annunciator
12. Symbolic Aircraft
13. Course Deviation Bar
14. Compass Cord
15. Double Bar (#2 System) Bearing Pointer Source Annunciator
16. Double Bar (#2 System) Bearing Pointer Distance
17. Double Bar (#2 System) Bearing Pointer
18. DME Hold Annunciator
19. Double Bar (#1 System) Bearing Pointer Distance
20. Double Bar (#1 System) Bearing Pointer Source Annunciator
21. Double Bar (#2 System) Bearing Pointer
22. Selected Heading Digital Display
23. Vertical Deviation Scale and Indicator
24. VNAV Mode Annunciator
25. Wind Speed and Wind Vector

A958W03C0390 C

Figure 3-15. EHSI Controls and Indicators

(15) Double bar (#2 system) bearing pointer source annunciator. The double bar bearing source annunciator displays the navigation sensor providing bearing information to the double bar pointer.

(16) Double bar (#2 system) bearing pointer distance. The double bar (#2 system) bearing pointer distance display shows the distance to the selected bearing reference ground station.

(17) DME hold annunciator.

(18) Single bar (#1 system) bearing pointer distance. The single bar (#1 system) bearing pointer distance display shows the distance to the selected bearing reference ground station.

(19) Single bar (#1 system) bearing pointer source annunciator. The single bar bearing source annunciator displays the navigation sensor providing bearing information to the single bar pointer.

(20) Single bar (#1 system) bearing pointer. The single bar (#1 system) bearing pointer points to the selected bearing sensor ground station (or waypoint when in the **LNAV** mode).

(21) Course deviation bar. The course deviation bar represents the centerline of the selected navigation or localizer course.

(22) Symbolic aircraft. The symbolic aircraft provides a quick visual cue as to the aircraft's position with respect to the select course and aircraft heading.

(23) Primary navigation source and system number annunciator. The primary navigation source annunciator displays the primary navigation and system number if applicable (such as **VOR 1** or **VOR 2).**

(24) Course pointer, The position of the course pointer on the compass card indicates the course that has been selected with the course select knob on the EFIS control panel. Once set, the course pointer rotates with the compass card.

(25) Wind speed and wind vector. Wind speed and direction information is displayed in the upper left corner of the EHSI if using **LNAV** (GPS or FMS) as the primary navigation source.

3-22. ELECTRONIC FLIGHT INSTRUMENT SYSTEM COMPOSITE DISPLAY MODES.

If an EFIS display or EADI symbol generator section fails, the composite mode may be selected for display on the remaining good display unit by depressing the composite **(CMPST)** switch indicator on the instrument panel. The

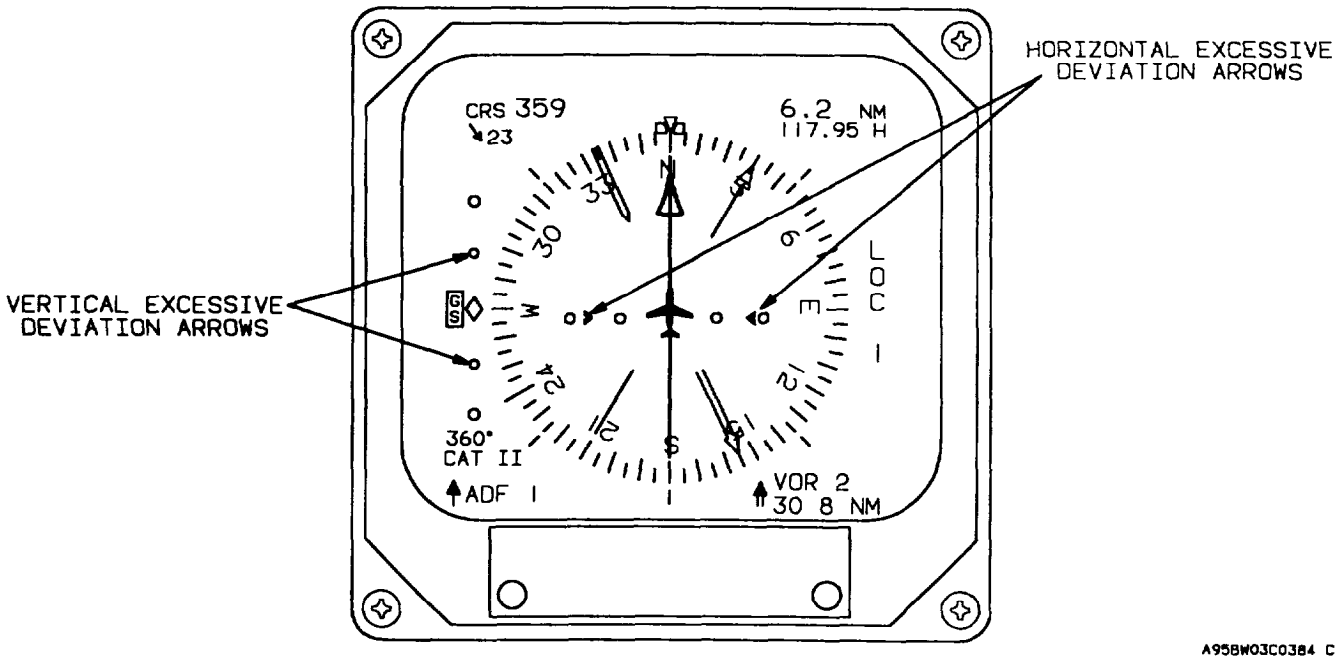

Figure 3-16. EHSI Category II Symbology

base composite display uses the standard EADI display for its foundation. To it is added a standard lateral deviation scale, selected **CRS,** selected **HDG,** distance information, **DME HOLD** annunciation, selected **NAV** sensor, and **TO/FR** information. Creating a composite display in this manner provides the pilot a familiar display, which requires minimal transition time when it is selected for use. The composite enroute mode display is shown in figure 3-17 and the composite approach mode display is shown in figure 3-18.

NOTE

If the EADI section of the symbol generator fails, a full composite display may be displayed on the EHSI. If the EHSI section fails, only pitch and roll information will be displayed on the EADI.

The following paragraphs describe the areas of the composite display which differ from the standard EADI display .

a. *Heading Tape.* If the heading data along the top of the horizon line becomes unavailable or invalid, a stationary red **HDG** annunciator will be displayed above and to the right of the symbolic aircraft.

b. Selected Course. Selected course is shown by a green alphanumeric display located toward the bottom of the display. In addition to the digital display, a downward pointing arrow on the heading tape shows the selected course.

NOTE

As the aircraft heading changes, the selected course arrow will follow the heading tape and may disappear from view.

If the selected primary **NAV** sensor is an on-side sensor the digital readout and pointer will be displayed in green. If an on-side **LNAV** is the selected primary **NAV** sensor and it is in the approach mode, the digital readout and pointer will be green. If the enroute mode is selected, the readout and pointer will be cyan. If an off-side sensor is selected, the digital readout and pointer will be yellow.

c. Heading Marker Selected Heading. A digital display of selected heading is displayed toward the bottom of the screen to the right of center. The selected heading is also shown by the orange heading marker on the heading tape.

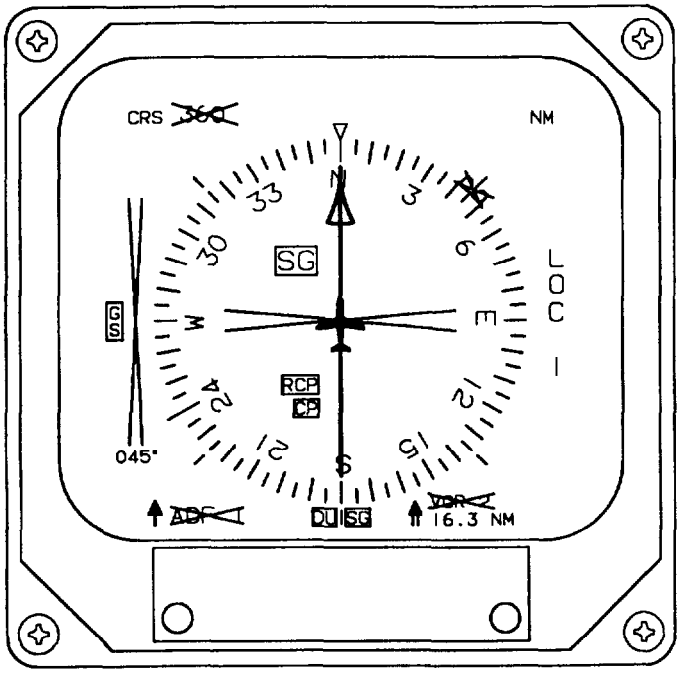

A958W03C0385 C

Figure 3-17. EHSI Fault Annunciators

NOTE

As the aircraft heading changes, the heading marker will follow the heading tape and may disappear from view.

d. Navigation Source Annunciation. The primary navigation sensor is displayed on the left side of the display. A green annunciation indicates an on-side approach **NAV** system is being displayed. A yellow annunciation indicates that a cross-side system has been selected. Cyan annunciations apply to on-side non-approach **NAV** systems. These color codes apply to the **NAV** source annunciator **CRS** pointer, course deviation bar, **CRS,** and distance. If both sides select the same navigation source a yellow box will be placed around the navigation source annunciator on both sides of the cockpit. If both sides select their respective cross-side navigation source, both **NAV** source annunciators will be yellow with no yellow box.

e. Lateral Course Deviation Scale. A lateral course deviation scale, consisting of four white circles and a center diamond, is located at the bottom of the display. The course. deviation scale provides a reference for the course deviation bar to indicate the centerline of the selected navigation or localizer course in relation to the center diamond. The course width displayed in the cornposite mode is identical to that typically shown on the EHSI.

f. Lateral Course Deviation Bar. The course deviation bar represents the centerline of the selected navigation or localizer course. If invalid or failed primary **NAV** sensor data is received the course deviation bar and scale will be removed and a red **X** will be annunciated.

g. To/From Indicator. A white **TO** or **FR** will be displayed to the left of the center diamond on the lateral deviation scale when in non ILS modes.

h. Distance Information. Distance information is shown in an alphanumeric display, located in the lower left comer of the display. Distance in nautical miles from the aircraft to the selected primary **NAV** station when in the **VOR, TACAN,** or **ILS** mode, or to the waypoint in **LNAV** mode is displayed.

i. DME HOLD. When **DME HOLD** is selected the DME distance and annunciator color will change to white and remain white until the **HOLD** function is released. The sensor identifiers (ADF, VOR, or ILS) will

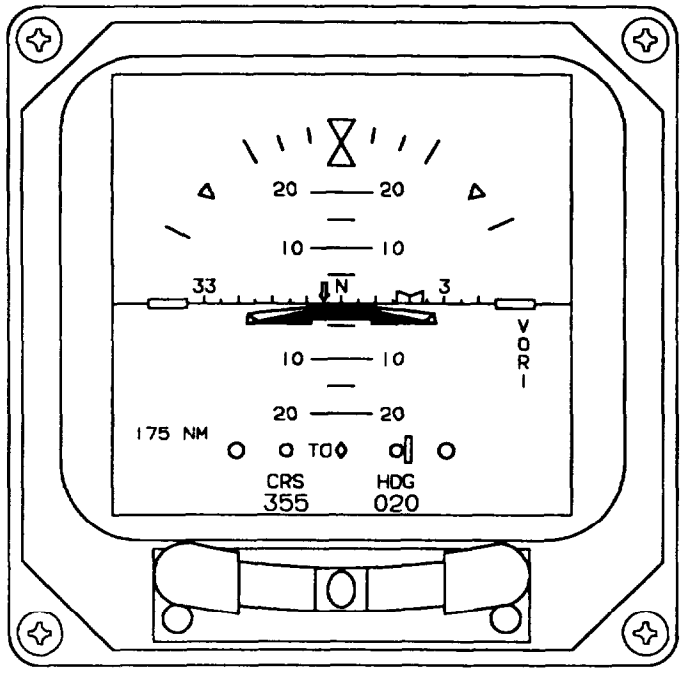

A958W03C0486 C

Figure 3-18. Composite Enroute Mode Display

retain their original color. The **HOLD** function is additionally annunciated by an orange **H** displayed immediately to the right of the distance information. Ground speed and time to station are not displayed while **DME HOLD** is active.

Once DME is placed in **HOLD,** its distance will continue to be displayed and will not be affected when the primary **NAV** sensor is changed.

NOTE

DME HOLD will not function when **LNAV** is the selected sensor.

3-23. ELECTRONIC FLIGHT INSTRUMENT SYSTEM REVERSIONARY MODES.

Three different reversionary modes of operation are provided for use in the event of a system component failure: composite, display down, and standby.

a. Composite (CMPST) Reversionary Mode. The composite (CMPST) reversionary mode is generally used to compensate for a failure of a display unit or the EADI section of the symbol generator. Depressing the respective pilot's or copilot's CMPST switch-indicator, located on the instrument panel, will select the composite display on the EADI or EHSI. The lower half of the CMPST switch will illuminate DISP to indicate that the composite reversionary mode has been selected. Refer to paragraph 3-20 for a description of the composite mode displays.

b. Display (EADI) Down Reversionary Mode. The display (EADI) down reversionary mode is generally used to compensate for a failure of the EADI display unit or the EADI section of the symbol generator. Depressing the respective pilot's or copilot's ADI switch-indicator, located on the instrument panel, will transfer the normal EADI display to the MPD. The lower half of the AD1 switch will illuminate DOWN to indicate that the display down reversionary mode has been selected.

c. Standby (STBY) Reversionary Mode. The standby (STBY) reversionary mode is generally used to compensate for a failure of the pilot's or copilot's symbol generator. Depressing the respective pilot's or copilot's SG switch-indicator, located on the instrument panel, will substitute the MFD symbol generator for the failed symbol generator. The lower half of the SG switch will illuminate

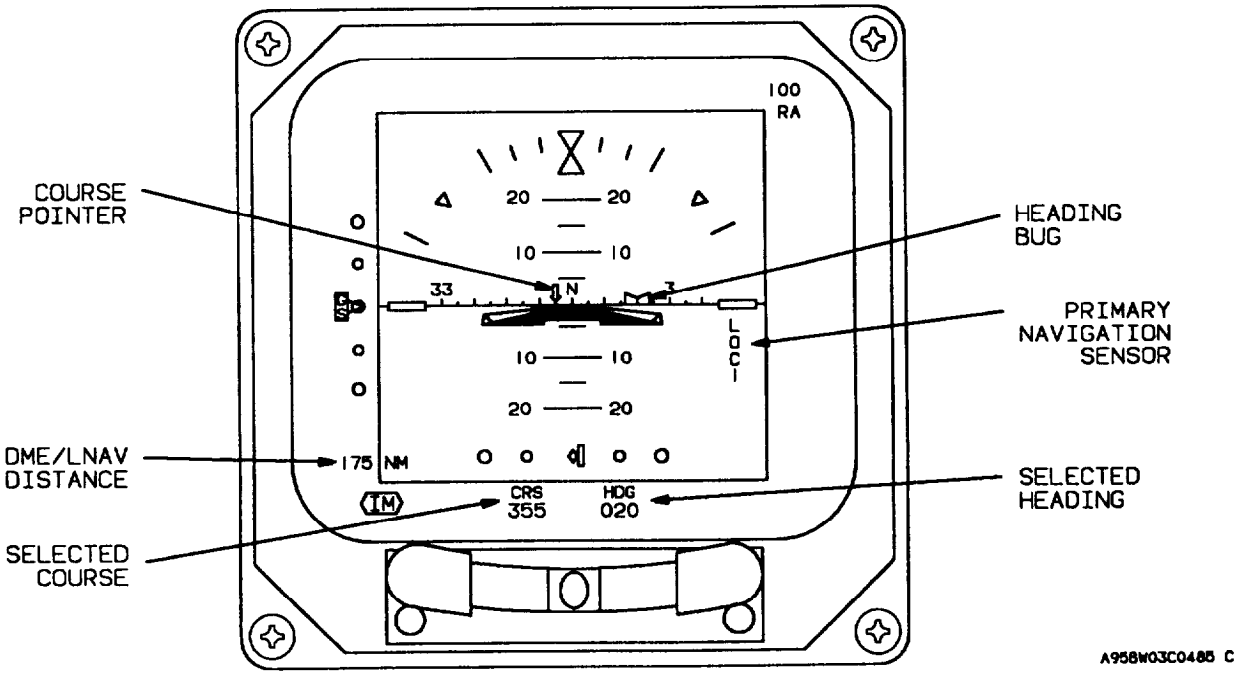

Figure 3-19. Composite Approach Mode Display

STBY to indicate that the standby reversionary mode has been selected.

3-24. AUTOMATIC FLIGHT CONTROL SYSTEM (KFC 400C).

The digital automatic flight control system consists of the following components:

Two autopilot/flight director computers (KCP 420).

Two air data computers (KDC 481).

Two altitude and vertical speed indicators (KAV 485).

Five primary servos (KSA 470). They are aileron, rudder, elevator, rudder trim, and elevator trim.

One autopilot controller (KMC 440).

Two autopilot monitors (KMC 440).

Two gyro adapters (KDA 430).

Two vertical gyros (KVG 350).

Two directional gyros (KCS 305).

Two rate turn gyros (KRG 332).

Two mode selectors (KMS 446).

Two EHSI (ED-551A).

Two EADI (ED-551A).

Two EFIS control panels (CP-467).

a. Autopilot/flight director computers (KCP 420). The autopilot/flight director computers provide all flight director and autopilot command computations as well as safety monitoring functions. The computers are fully digital and employ dual channels for command computation. Each calculation is computed separately and simultaneously by each channel, with the results compared for consistency by a third channel devoted to system monitoring. The computers are fail passive to prevent the possibility of servo overcontrol by both disengaging the affected servo motor clutch and shutting off motor drive power upon detecting a fault. The system can either disengage affected autopilot control axes individually or, if necessary, shut down the entire flight director/autopilot system. The flight computers also generate audio alerts if the autopilot disengages or trim fails.

b. Air Data Computers (KDC 481). The air data computer processes pitot and static pressure and air temperature inputs, and supplies the processed information to the flight computer and the altitude/vertical speed indicator. The flight computers also provide the air data necessary for the flight management system to provide manual **VNAV** guidance and automatic three dimensional navigation. The air data computers use the altitude/vertical speed indicators as part of the basic system.

c. Altitude/Vertical Speed Indicators (KAV 485). The air data computers drive the altitude, vertical speed, and density altitude displays on the altitude/vertical speed indicators. The altitude indicator is a digital counter drum pointer style indicator and is combined in the same instrument with a vertical speed indicator. The instrument also provides altitude preselection, alerting, and vertical speed preselection.

(1) Altitude/vertical speed indicator controls, indicators, and functions (fig. 3-19).

(a) Inches of mercury/millibar pushbutton selector switch. The inches of mercury/millibar pushbutton selector switch alternates calibration of the altimeter setting display between inches of mercury **(IN HG)** and millibars **(MB),** as annunciated.

(b) Altimeter scale *(hundreds of feet) and indicator need/e,* The altimeter scale and indicator needle display altitude information derived by the air data computer. The digital portion of the display provides altitude resolution to within 20 feet when the aircraft's vertical speed is less than 1000 feet per minute, and to within 100 feet when vertical speed is greater than 1000 feet per minute.

(C) Altitude ALERT annunciator. The altitude alert annunciator illuminates when the aircraft's current altitude is within 300 to 1000 feet of the value specified in the altitude preselect display. Upon reaching the selected altitude, the altitude annunciator illuminates again, briefly. An aural alert sounds upon illumination of the annunciator at 1000 feet before and 300 feet outside the selected altitude.

*(d) Altitude select/density altitude dis-*play. The altitude select/density altitude display provides a continuous display of selected altitudes for altitude alerting and flight director capture and tracking, and momentary display of current density altitude derived by the air data computer. Preselected altitudes are displayed in 100 foot increments when selected by the altitude/vertical speed indicator controls, and in 10 foot increments when selected through the flight management system. The current density altitude will be displayed for approximately 5 seconds at the end of the air data systems preflight test function. Depressing the **PUSH BARO TEST** pushbutton twice in rapid succession changes the display to density altitude at any time.

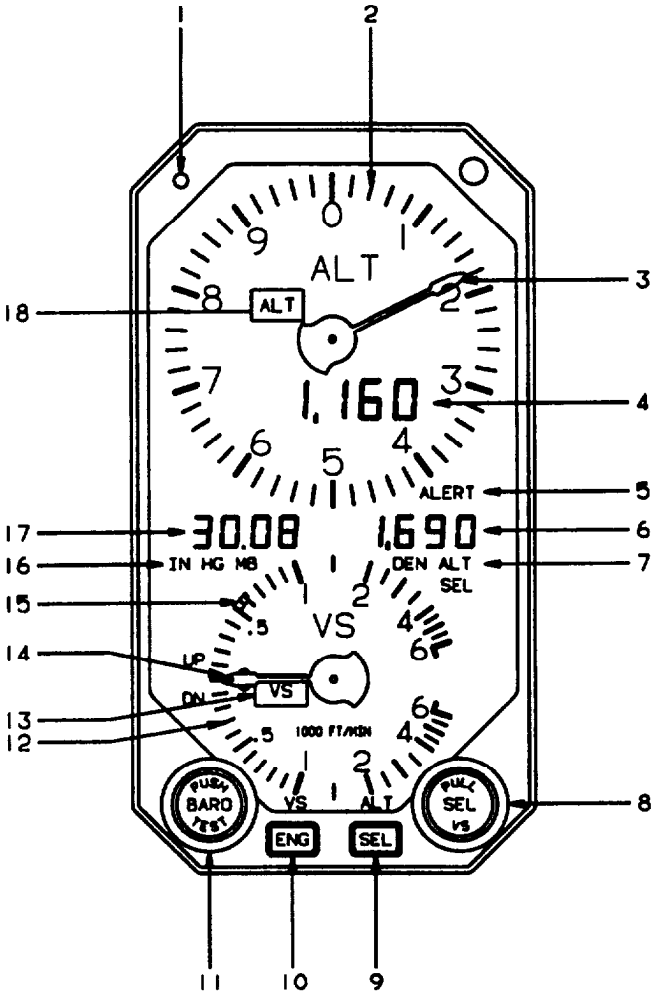

1. Inches of Mercury/Millibar Pushbutton Selector Switch
2. Altimeter Scale (Hundreds of Feet)
3. Altimeter Indicator Needle
4. Altitude Display
5. Altitude ALERT Annunciator
6. Altitude Select/Density Altitude Display
7. Altitude Select/Density Altitude Annunciator
8. Altitude/Vertical Speed Preselect Control
9. Altitude Select Key
10. Vertical Speed Engage Key
11. Altimeter Setting Selector/ Push To Test Control
12. Vertical Speed Indicator Scale
13. Vertical Speed Invalid Annunciator
14. Vertical Speed Indicator Needle
15. Preset Vertical Speed Selection Indicator
16. Inches of Mercury/ Millibar Annunciator
17. Altimeter Setting Display
18. Altimeter Invalid (ALT) or FAIL Annunciator

A958W03C0378 C

Figure 3-20. Altitude/Vertical Speed Indicator

(e) Altitude select/density altitude annunciator. The altitude select annunciator **(ALT SEL)** or density altitude annunciator **(DEN ALT)** will illuminate to show which information is being displayed.

(f) Altitude/vertical speed preselect control. The altitude/vertical speed preselect control uses dual concentric knobs to control altitude and vertical speed preselection. To preselect altitude, the smaller knob should be depressed to ensure that it is in the inner position. Rotating the smaller knob adjusts the preselected altitude in 100 foot increments, with automatic rollover to higher values. The outer knob adjusts altitude in 1000 foot increments. Altitudes may also be preselected through the flight management system.

Pulling the smaller knob to its outer position initializes the vertical speed marker, synchronizing it with the last vertical speed selected and references the control knob to vertical speed. The smaller knob adjusts selections in 100 foot per minute increments with automatic rollover. The larger knob adjusts selections in 1000 foot per minute increments.

(9) Altitude select key. The altitude select key, placarded **SEL,** is the same as the altitude select key on the flight director mode selector (fig. 3-21). When depressed, the altitude select key engages the flight director's altitude arm function in coordination with the digital altitude preselect display on the altitude/vertical speed indicator.

(h) Vertical *speed engage key. The* vertical speed engage key, placarded **ENG,** is the same as the vertical speed key on the flight director mode selector (fig. 3-21). When depressed, the vertical speed engage key causes the flight director to command the aircraft to climb or descend at the rate indicated by the vertical speed marker on the vertical speed indicator.

NOTE

If the vertical speed selection marker on the vertical speed indicator scale is in view when vertical speed hold is engaged, the preselected vertical speed will be commanded. If the marker is not in view when vertical speed is engaged, the aircraft's current vertical speed will be maintained and the marker will come into view synchronized with the vertical speed indicator pointer.

(i) Vertical speed indicator scale. The vertical speed indicator scale displays instantaneous vertical speed with 100 foot resolution for values less than 1000 feet per minute up or down, and with 500 feet per minute resolution for larger values.

(j) Vertical speed invalid annunciator. Illumination of the vertical speed invalid annunciator, placarded **VS,** indicates an invalid display.

(k) Vertical speed indicator needle. Moves around vertical speed scale to indicate vertical speed.

(l) Preset vertical *speed selection indicator.* Indicates selected vertical speed.

(m) Inches of mercury/millibar annunciator. Indicates units of pressure measurement for altimeter setting (in **HG** or **MB).**

(n) Altimeter setting display Displays altimeter setting in millibars or inches of mercury.

(o) Altimeter invalid (ALT or FAIL) annunciator. The altimeter invalid annunciator illuminates **ALT** or **FAIL** to indicate invalid altimeter information.

d. Autopilot Servo Actuators (KSA 470). To manipulate trim surfaces, as well as elevator, aileron, and rudder controls, the autopilot employs servo actuators installed in the aircraft's fuselage. Each servo assembly includes a drive motor, clutch mechanism, and mounting bracket.

e. Autopilot Controller (KMC 440). The autopilot controller provides selection of autopilot, yaw damper, half bank, and soft ride functions. In addition the autopilot also includes roll, pitch, and yaw axis annunciators that illuminate to indicate failure of individual control axes, and roll and vertical trim controls. To engage autopilot modes depress the corresponding control key. To disengage, depress the key a second time.

NOTE

The autopilot cannot be activated if the flight director is not operating properly.

Annunciator lamps illuminate above the selector keys and on the EADI to indicate autopilot mode of operation. In the event of system failure, annunciators corresponding to the autopilot and yaw damper will flash for approximately 5 seconds before extinguishing. An alert tone will sound upon disengagement.

(1) Autopilot controller controls, indicators, and functions (fig. 3-20).

(a) Autopilot engage/disengage pushbutton selector switch. Depressing the autopilot engage/disengage pushbutton selector switch, placarded AP, initiates autopilot control of the pitch, roll, and yaw axes,

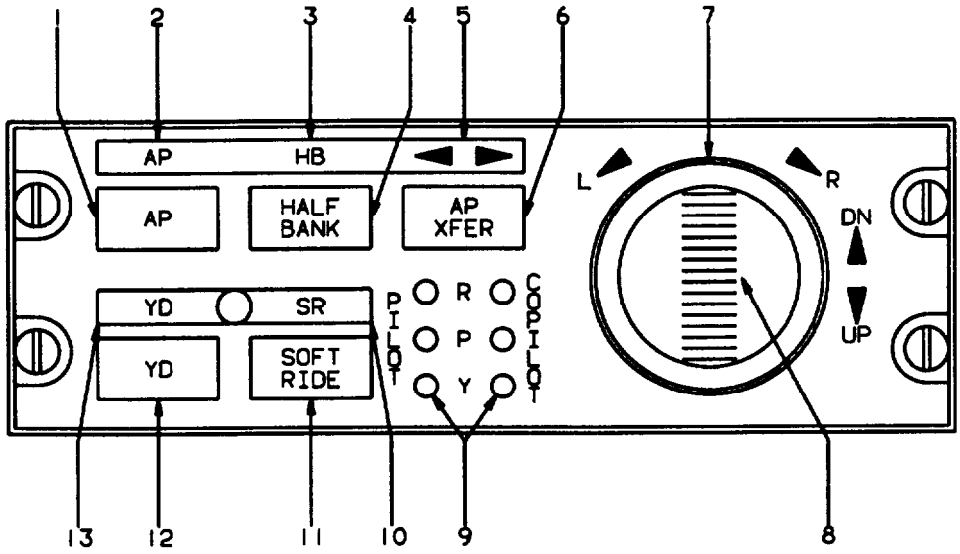

1. Autopilot Engage/Disengage Pushbutton Selector Switch
2. Autopilot Engaged Annunciator
3. Half Bank Mode Annunciator
4. HALF BANK Mod. Pushbutton Selector Switch
5. Autopilot Left/Right System Transfer Indicator
6. Autopilot Left/Right Transfer Pushbutton Selector Switch
7. Roll/Roll Rote Command Control Knob
8. Vertical Trim Thumbwheel Control
9. Pilot/Copilot Roll, Pitch, and Yaw Axis Failure Annunciators
10. Soft Ride Mode Annunciator
11. Soft Ride Mod. Pushbutton Selector Switch
12. Yaw Damper Engage/Disengage Pushbutton Selector Switch
13. Yaw Damper Engaged Annunciator

A958W03C0376 C

Figure 3-21. Autopilot Controller

provided the system meets preflight test criteria. The yaw damper and flight director, if not previously engaged, engage automatically upon autopilot activation. In the absence of any selected flight director modes, the autopilot will follow basic roll and pitch attitude hold commands synchronized to the aircraft attitude current upon activation. Depressing the autopilot key a second time cancels its operation. The flight director and yaw damper will remain engaged until they are cancelled individually.

(b) Autopilot engaged annunciator. Illumination of the autopilot annunciator, placarded **AP,** indicates that the autopilot is engaged.

(c) Half *bank mode annunciator.* Illumination of the half bank mode annunciator, placarded **HB,** indicates that the half bank mode has been selected and is engaged.

(d) Half bank mode pushbutton selector switch. Depressing the half bank mode pushbutton selector switch, placarded **HALF BANK,** reduces the autopilot maximum roll attitude command to one half the normal limit. Roll commands of lesser magnitude are not affected. **HALF BANK** may be engaged in conjunction with any flight director tracking mode with the exception of approach. **HALF BANK** may be employed at the same time as approach arm, but will cancel automatically upon initiation of the approach capture sequence.

(e) Autopilot left/right system transfer indicator. The autopilot left/right system transfer indicator consists of a left and right illuminated arrow. The indicator, located above the autopilot transfer **(AP XFER)** switch, illuminates to show which side is controlling the aircraft.

(f) Autopilot left/right system transfer pushbutton selector switch. Depressing the autopilot left/right transfer pushbutton selector switch, placarded **AP XFER,** changes which EPIS system (left or right) controls the aircraft.

(g) Roll/roll rate command control knob. The roll/roll rate command control knob, placarded **L** and **R,** is a rotary, return-to-center control knob. Turning the knob modifies the flight director's reference attitude during operations in roll attitude hold. Turning the knob in either direction cancels any selected flight director horizontal mode and engages roll attitude hold. Operating the roll attitude control does not affect arm operations in nav or approach modes, nor does it affect flight director vertical modes, with the exception of glideslope, which it cancels along with approach.

Roll rate commands increase in direct proportion to the degree of roll attitude control knob deflection, up to the flight control system's maximum commandable roll rate or attitude. Releasing the knob allows it to return automatically to its center position. The flight director will command the aircraft to maintain the existing roll attitude. Roll attitudes of less than two degrees of bank angle will revert to wings-level flight.

(h) Vertical trim thumbwheel control. The vertical trim thumbwheel control, placarded **DN** and **UP,** is a three position, return to center rocker switch. Calibration of the control varies, depending on the flight director mode engaged and whether the flight crew activates the vertical trim switch momentarily, allowing it to return to center immediately upon feeling it click (discrete trim), or holds the switch in position for several seconds (continuous trim).

Depressing the upper portion of the rocker switch adjusts the aircraft's pitch attitude downward, and depressing the lower portion adjusts the attitude upward.

Activating vertical trim cancels certain flight director vertical tracking modes, but has no effect on modes engaged in the arm phase. The flight director will revert to pitch attitude hold if it was coupled in glideslope, VNAV, climb, altitude capture, or go-around at the moment of trim activation. If the descent mode was coupled, the flight director will revert to vertical speed hold and will remain coupled throughout vertical trim operation.

If using continuous vertical trim when the capture point is reached, the capture will occur and vertical trim will be ignored until released. After release, further use of vertical trim will cause the same effect as described above. The effect of activating discrete or continuous trim on flight director operations is shown in table 3-2.

(i) Pilot/copilot roll, pitch, and yaw axis failure annunciators. Pilot/copilot roll, pitch, and yaw axis failure annunciators, placarded **R, P,** and **Y,** indicate autopilot axis decoupling,

System integrity is ensured by automatic self-monitoring tests conducted by the autopilot during autopilot operation. In the event of autopilot or servo motor malfunction, the flight control system automatically disengages the servo motor clutch and drive power to the affected axis. The **R, P,** or **Y** indicator lights on the autopilot controller will illuminate to alert the crew of axis decoupling and **AP FAIL** will flash for 2 seconds, then remain illuminated.

(j) Soft ride mode annunciator, Illumination of the soft ride mode annunciator, placarded **SR,** indicates that the soft ride mode has been selected and is engaged.

Table 3-2. Vertical *Trim Command VS Flight Director Operations*

TRIM COMMAND	EFFECTS
DISCRETE TRIM	
Pitch Attitude Hold	0.5° per click
Altitude Hold	20 feet per click
Indicated Air Speed Hold	2 knots per click
Vertical Speed Hold	100 fpm per click
CONTINUOUS TRIM	
Pitch Attitude Hold	Maintains constant g profile until release
Altitude Hole	Maintains 500 fpm climb or descent until release
Indicated Airspeed Hold	One knot per second until release
Vertical Speed Hold	100 fpm per second until release

BT05549

(k) Soft ride mode pushbutton selector switch. Depressing the soft ride mode pushbutton selector switch, placarded **SOFT RIDE,** engages the soft ride mode. With the soft ride mode engaged, the flight director reacts more slowly than normal to deviations from the planned flight track or aircraft attitude. Although soft ride is most useful to reduce command activity in turbulent air, it may be engaged any time a generally smoother flight is more desirable.

Soft ride may be engaged with any mode as long as the autopilot is engaged, with the exception of approach. Soft ride may be employed at the same time as approach arm, but will cancel automatically upon initiation of the approach capture sequence.

(I) Yaw damper engage/disengage pushbutton selector switch. The yaw damper engage/disengage pushbutton selector switch, placarded YD, alternately engages and disengages yaw damper functions independently of autopilot or flight director operation. If the yaw damper was previously engaged through autopilot activation, depressing the key cancels the function.

The yaw damper augments aircraft stability by opposing uncommanded motion about the yaw axis and provides turn coordination.

(m) Yaw *damper engaged annunciator.* Illumination of the yaw damper mode annunciator, placarded **YD,** indicates that the yaw damper mode has been selected and is engaged.

f. Autopilot Monitors (KM4 432). The autopilot monitors monitor aircraft movements during autopilot operations. Aircraft accelerations and pitch and roll attitudes and rates are monitored to detect values exceeding the maximum allowable limits. The autopilot monitors also receive signals from primary and trim servos that enable it to detect trim system malfunctions. If the autopilot is shut down by the autopilot monitor, the system cannot be reengaged without first successfully completing the flight control system's automatic preflight test routine. The test may be initiated by cycling power to the flight computer with the autopilot power switch or circuit breaker.

g. Gyro Adapters (KDA 430). The gyro adapters convert information from the aircraft's vertical, directional, and rate gyros and internal accelerometers to digital format for use by the digital flight control system.

h. Vertical Gyros (KVG 350). Roll and pitch attitude information from the vertical gyros provides line of sight stabilization to the weather radar antenna and vertical reference to the autopilot and EFIS.

i. Directional Gyros (KCS 305). The directional gyros provide heading information to the gyro adapter which provides digital heading information to the autopilot/flight director computer and to the air data computer.

j. Rate Turn Gyros (KCS 305). The rate turn gyros provide turn rate information to the gyro adapter which provides digital turn rate information to the autopilot/flight director computer and to the air data computer.

k. Flight Director Mode Selector (KMS 446). The flight director mode selector provides for selection of flight director/autopilot mode of operation.

(1) Flight director mode selector controls, indicators, and functions (fig. 3-21).

(a) Heading mode pushbutton selector switch. Depressing the heading mode pushbutton selector switch, placarded **HDG,** selects the flight director heading mode. In the heading mode the flight director commands roll attitudes necessary to track the heading indicated by the heading marker position on the EHSI and EADI.

Activating the heading mode cancels any other horizontal tracking mode. The heading mode may be used during nav arm or approach arm sequences, but disengages automatically in favor of nav or approach capture or track functions.

(b) Heading mode annunciator. Illumination of the heading mode annunciator, placarded **HDG**

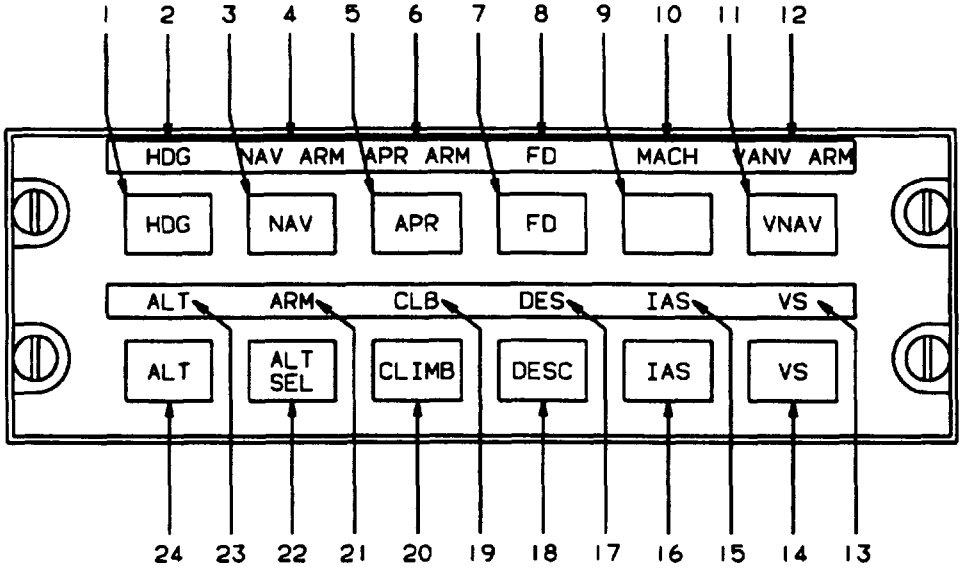

1. Heading Mode Pushbutton Selector Switch
2. Heading Mode Annunciator
3. Navigation Mode Pushbutton Selector Switch
4. Navigation Mode Arm Annunciator
5. Approach Mode Pushbutton Selector Switch
6. Approach Mode Arm Annunciator
7. Flight Director Mode Pushbutton Selector Switch
8. Flight Director Mode Annunciator
9. Not Used
10. Not Used
11. Vertical Navigation Mode Pushbutton Selector Switch
12. Vertical Navigation Mode Arm Annunciator
13. Verticol Speed Hold Mode Annunciator
14. Vertical Speed Hold Pushbutton Selector Switch
15. Indicated Airspeed Hold Mode Annunciator
16. Indicated Airspeed Hold Mode Pushbutton Selector Switch
17. Descent Mode Annunciator
18. Descent Mode Pushbutton Selector Switch
19. Climb Mode Annunciator
20. Climb Mode Pushbutton Selector Switch
21. Altitude Select Arm Annunciator
22. Altitude Select Mode Pushbutton Selector Switch
23. Altitude Hold Mode Annunciator
24. Altitude Hold Mode Pushbutton Selector Switch

A958W03C0375 C

Figure 3-22. Flight Director Mode Selector

indicates that the heading hold mode has been selected and is engaged.

(c) Navigation mode pushbutton selector *switch.* Depressing the navigation mode pushbutton selector switch, placarded **NAV,** selects the navigation mode. When the **NAV** mode is engaged, the flight director commands roll attitudes necessary to track the course selected on the EHSI. Upon selection, the **NAV** mode engages either **NAV ARM** or **NAV** capture, depending upon the aircraft's proximity to the selected course and its closure rate. While any horizontal tracking mode may be engaged in conjunction with **NAV ARM** to provide intercept guidance, initiation of **NAV** capture and track sequences cancels the coexisting mode. If the aircraft's deviation from the selected course centerline is sufficiently small, or if the rate of closure with the new course is sufficiently high, the flight director initiates the **NAV** capture sequence immediately.

(d) Navigation mode arm annunciator. The navigation mode arm annunciator, placarded **NAV ARM,** illuminates to indicate that the navigation mode has been selected and is armed.

(8) *Approach mode pushbutton selector switch.* Depressing the approach mode pushbutton selector switch, placarded **APR,** selects the approach flight director mode. The approach mode is similar to the navigation mode with regard to arm, capture, and track operations.

Upon initial selection the approach mode engages in either the approach arm or capture mode, depending upon the aircraft's closure rate and proximity to the selected course. Due to the heightened sensitivity of the deviation display in the approach mode, the flight director may initiate turn commands before the course deviation indicator displays less than a full scale deflection. Selecting the approach mode after the aircraft has already passed the point at which approach capture normally would begin may result initially in course overshoot due to the flight director's roll command limits.

The autopilot automatically discriminates between front and back course approaches. Front course/back course selections are determined by the relative angle between the aircraft's heading and the course selected on the EHSI. Intercept angles of between 0 and 105 degrees will cause the flight control system to select the ILS front course. Angles of between 106 and 180 degrees will cause the flight director to command back course interception and tracking.

NOTE

It is essential that the course selection arrow on the EHSI always be aligned with the ILS front course. Failure to align the course arrow properly may result in erroneous front course/back course selection by the flight control system.

The flight director automatically engages the glideslope arm, capture and track sequences during ILS front course approaches, Glideslope coupling is inhibited during back course procedures.

Any horizontal tracking mode may be employed during approach arm phases, but will cancel automatically upon initiation of approach capture and track.

(f) Approach arm annunciator. Illumination of the approach arm mode annunciator, placarded **APR ARM,** indicates that the approach mode has been selected and is armed.

(g) Flight director mode pushbutton selector switch. Depressing the flight director mode pushbutton selector switch, placarded **FD,** initiates flight director functions independently of the autopilot or yaw damper. The flight director will engage roll attitude hold and pitch attitude hold and the command bar will come into view synchronized to the current aircraft attitude. Roll attitudes of less than 2 degrees will revert to wings level flight.

NOTE

It is not necessary to depress the flight director key prior to selecting another flight director mode. Selecting any flight director mode initiates flight director commands in that mode.

Depressing the flight director key a second time will disengage the flight director.

NOTE

The flight director will not disengage if the autopilot is in use.

(h) Flight director mode annunciator. Illumination of the flight director mode annunciator, placarded **FD,** indicates that the flight director mode has been selected and is engaged.

(i) Not used.

(j) Not used.

(k) Vertical navigation mode pushbutton selector *switch.* Depressing the vertical navigation pushbutton selector switch, placarded **VNAV,** selects the vertical navigation mode. In the vertical navigation mode, the flight director commands pitch attitudes for level flight or for constant vertical track-angles (climbing or descending) to intercept new target altitudes exactly at flight plan waypoints or at specified distances offset from them. The flight management system must be selected for display *on* the EHSI to support vertical navigation operations. Any horizontal flight director mode, including roll attitude hold,

may be employed so long as the aircraft's heading remains within SO degrees of the desired track to the waypoint. In addition, the currently active vertical waypoint must have an altitude assigned to it in order for the flight management system to perform **VNAV** calculations.

When selected, the vertical navigation mode will engage in either **VNAV ARM** or **VNAV** capture or track, depending upon the aircraft's closure rate and proximity to the assigned altitude. Any vertical tracking mode is compatible with **VNAV** arm and may be used to provide flight guidance to the point of intercept. The tracking mode employed will automatically cancel in favor of **VNAV** capture.

(l) Vertical navigation mode arm annunciator. Illumination of the vertical navigation arm mode annunciator, placarded **VNAV,** indicates that the vertical navigation mode has been selected and is armed.

(m) Vertical Speed hold mode annunciator. Illumination of the vertical speed hold mode, placarded **VS,** indicates that the vertical speed hold mode has been selected and is engaged.

(n) Vertical Speed hold mode pushbutton selector switch. Depressing the vertical speed hold mode pushbutton selector switch, placarded **VS,** selects the vertical speed hold mode. In the vertical speed mode, the flight director commands pitch attitudes to maintain the vertical speed selected on the altitude/vertical speed indicator. In the absence of a preselected vertical speed, engaging the mode will cause the flight director to command a climb or descent at the rate current upon selection. In addition, vertical speed commands may be modified through the use of the autopilot vertical trim at the rate of 100 feet per minute per click during momentary trim operation, or 100 feet per minute per second during continuous trim operation.

When vertical speed mode is engaged or the preselect function of altitude/vertical speed indicator is activated, an orange marker appears on the vertical speed scale. Using the vertical trim switch or the **VS** select knob on the altitude/vertical speed indicator repositions the marker for reference for the pilot and autopilot.

(o) indicated airspeed hold mode annunciator. Illumination of the indicated airspeed hold mode annunciator, placarded **IAS,** indicates that the indicated airspeed hold mode has been selected and is engaged.

(p) Indicated airspeed ho/d mode pushbutton selector switch. Depressing the indicated airspeed hold mode pushbutton selector switch, placarded **IAS,** will cause the flight director to command pitch attitudes to maintain the indicated airspeed current upon selection. Airspeed commands may be altered through the use of the autopilot vertical trim rocker switch at the rate of two knots per click or one knot per second.

As a safety feature, the flight director automatically reverts to indicated airspeed hold whenever the aircraft exceeds a predetermined maximum speed. The flight director will command pitch attitudes to reduce indicated airsped to V_{moa}. and then maintain that airspeed.

(q) Descent mode annunciator. Illumination of the descent mode annunciator, placarded **DESC,** indicates that the descent mode has been selected and is engaged.

(r) Descent mode pushbutton selector switch. Depressing the descent mode pushbutton selector switch, placarded **DESC,** selects the descent mode. In the descent mode the flight director commands pitch attitudes to initiate a descent at a predetermined rate of descent. Engaging the descent mode also arms the altitude capture sequence if the selected altitude is lower than the aircraft's present altitude.

(s) Climb mode annunciator. Illumination of the climb mode annunciator, placarded **CLB,** indicates that the climb mode has been selected and is engaged.

(t) Climb mode pushbutton selector switch. Depressing the climb mode pushbutton selector switch, placarded **CLIMB,** selects flight director climb mode. At typical aircraft climb power settings, selecting the climb mode causes the flight director to command pitch attitudes to maintain a programmed climb that alters airspeed with reference to altitude. The climb profile conforms to a comfortable aircraft attitude for use during en route climbs. The exact climb profile is programmed for this aircraft type.

Engaging the climb mode also activates the altitude select mode whenever a higher altitude is displayed in the altitude/vertical speed indicator's altitude preselect window. In that case the flight director automatically cancels the climb mode upon initiation of altitude capture and transition to altitude hold.

Selecting the climb mode with the aircraft operating at a reduced power setting may cause the flight director to command level flight until the aircraft accelerates to the scheduled airspeed for the current altitude. Only upon reaching that target airspeed will the flight director command pitch attitudes to initiate the climb.

(u) Altitude select arm *annunciator.* Illumination of the altitude select arm mode annunciator, placarded **ARM,** indicates that the altitude select mode has been selected and is armed.

(v) Altitude select mode pushbutton selector switch. Depressing the altitude select mode pushbutton selector switch, placarded **ALT SEL,** selects the flight director altitude select mode. The altitude select mode arms the flight director for capture and tracking of altitudes selected with the altitude/vertical speed indicator or the flight management system. A separate vertical mode must be engaged to provide flight guidance to the point of altitude capture. Upon reaching the altitude capture point, the selected vertical mode will cancel and the flight director will engage altitude capture and then altitude hold.

During transitions to armed altitudes the flight control system will briefly sound an alert tone when the aircraft passes within 1000 feet of the selected altitude. In addition, an alert annunciator illuminates on the altitude/vertical speed indicator when the aircraft is between 1000 and 300 feet above or below the armed altitude. The annunciator will illuminate again briefly when the aircraft reaches the selected altitude. Subsequent alerts are provided if the aircraft deviates 300 feet or more from the selected altitude.

Altitude select will engage automatically with selection of climb or descent modes, provided that a higher or lower altitude is displayed in the altitude preselect window on the altitude and vertical speed indicator.

(w) Altitude ho/d mode annunciator. Illumination of the altitude hold mode annunciator, placarded **ALT,** indicates that the altitude hold mode has been selected and is engaged.

(x) Altitude ho/d mode pushbutton selector switch, Depressing the altitude hold pushbutton selector switch, placarded **ALT,** selects the flight director altitude hold mode.

In the altitude hold mode the flight director commands pitch attitudes for capture and tracking of the barometrically corrected aircraft altitude current at the moment of mode selection. Altitude hold can be entered directly or in conjunction with the altitude select mode. Engaging altitude hold directly during a climb or descent will allow the aircraft to fly through the desired altitude and then recover from the other side. For this reason, altitude is most useful for engagement when vertical speed is less than 500 feet per minute.

Selecting altitude hold after the altitude select mode has been engaged cancels altitude select and causes the **ARM** annunciator to extinguish. The flight director will command the aircraft to hold the altitude present at the moment of mode selection.

Altitude hold commands may be modified by holding the autopilot vertical trim rocker switch in the up or down position either momentarily or for several seconds at a time. Momentary switch activation modifies target altitudes at the rate of 20 feet per click. Continuous vertical trim operation causes the flight director to command a climb or descent, as appropriate, at 500 feet per minute until the switch is released.

1. Autopilot Operation.

(1) Autopilot se/f test.

1. **AVIONICS MASTER PWR** - **ON.**
2. **EFIS POWER** switches - **ON.**
3. **AP/TRIM POWER** switch - **ON.**
4. Allow 3-4 minutes for gyros to erect, **HDG** and **ATTITUDE** flags clear.
5. **AP FAIL** and **AP TRIM FAIL** - Annunciators illuminate upon initial application of **AP/TRIM POWER** and then extinguish (followed by an audio test tone) after successful completion of the self-test. Allow 60 seconds after gyros are valid.

CAUTION

Taxi with caution. The autopilot temporarily engages the servos during the automatic self-test. Be prepared to overpower the autopilot as required.

NOTE

Illumination of the **AP FAIL** annunciator other than during initial power-up indicates a failure. This failure annunciation will result in power being removed from the roll, pitch, yaw, pitch trim, and rudder trim servos. The flight director may remain functional depending upon the nature of the failure. The continual self-test feature may also inhibit flight director, autopilot and electric trim use without illumination of the AP FAIL annunciator.

(2) Flight control/autopilot system preflight check.

1. **AP XFER** switch - Select pilot's side.
2. **AP** mode selector button (AP) - Press to engage autopilot.
3. Flight controls - Overpower autopilot in pitch, roll, and yaw axis.

WARNING

If unable to overpower the autopilot in any axis, do not use.

4. Auto trim - Check.

   a. Apply nose up force on control wheel - Note nose down trim motion after approximately 3 seconds.

   b. Apply nose down force on control wheel - Note nose up trim motion after approximately 3 seconds.

   c. Press right rudder - Note left rudder trim motion after approximately 3 seconds.

   d. Press left rudder - Note right rudder trim motion after approximately 3 seconds.

5. Select **HDG** mode - Observe **FD** commands and control wheel motion correspond to movement of the heading selector knob.

6. **AP DISC** & **TRIM INTRPT** - Press and release. Note autopilot disconnection, flashing **AP** annunciation, and aural disconnect tone.

7. Manual electric trim - Check.

   a. Pilot and copilot control wheel trim switches - Check.

WARNING

Operation of the electric trim switch system should occur only by movement of pairs of switches. Any movement of the elevator trim wheel while depressing only one switch element denotes a trim system malfunction. The **AP/TRIM POWER** switch must be turned **OFF** and flight conducted only by manual operation of the trim wheel. Do not use autopilot.

   b. Pilot and copilot trim switches - Check individual element for no movement of trim, then check proper operation of both elements.

   c. Pilot trim switches - Check pilot switches override copilot switches while trimming in opposite directions, and trim moves in direction commanded by pilot.

   d. Pilot and copilot trim switches - Check trim disconnects while activating pilot or copilot trim disconnect switches.

8. **AF XFER** switch - Select copilot's side and repeat steps 2 thru 7.

3-25. VHF NAVIGATION RECEIVERS (KNR 634A).

a. Introduction. Two VHF navigation receivers (fig. 3-22) combining VOR, localizer, glideslope, and marker functions are installed. Each receiver provides 200 channels in the frequency range of 108.00 through 117.95 MHz (160 VOR channels and 40 localizer channels). Selection of VOR or localizer is automatic. Each receiver also provides 40 glideslope Channels in the frequency range of 329.15 to 335.00 MHz and a marker receiver which operates at 75 MHZ. The VHF navigation receivers are powered through the 2-ampere **NAV NO. 1** and **NO. 2** circuit breakers, located on the right sidewall circuit breaker panel (fig. 2-7).

b. VHF Navigation Receiver Control Unit (KFS 579A) Controls and Functions. The VHF navigation receiver control unit controls the number one VHF navigation receiver. The number two VHF navigation receiver is controlled by the **NAV/TAC** navigation receiver control unit.

(1) Active frequency display. Displays the active frequency (frequency to which the receiver is tuned).

(2) Photocell. The built-in photocell automatically controls display brightness.

(3) Frequency transfer switch. The frequency transfer switch is a pushbutton switch which transfers the frequency in the standby display to the active display and the frequency in the active display to the standby display each time it is depressed.

Depressing the frequency transfer switch for more than 2 seconds while in the standby entry mode will switch the receiver control unit to the active entry mode.

Momentarily depressing the frequency transfer switch while in the active entry mode will return the receiver control unit to the standby entry mode.

(4) Megahertz tuning knob. The megahertz tuning knob is the larger of two concentric knobs which are used to set the frequency in the standby frequency display.

Rotation of the megahertz tuning knob sets the three digits to the left of the decimal point in the standby frequency display. The numbers will roll over at the upper and lower frequency limits. Rotating the megahertz tuning knob in either direction with receiver control unit in the Channel mode will change the channel number and its corresponding frequency.

(5) Kilohertz tuning knob. The kilohertz tuning knob is the smaller of two concentric knobs which are used to set the frequency in the standby frequency display. Rotation of the kilohertz tuning knob sets the two digits to the right of the decimal point in the standby frequency display in 50 kilohertz increments. The numbers will roll over at the upper and lower frequency limits. Rotating the kilohertz tuning knob in either direction with receiver control unit in the channel mode will change the channel number and its corresponding frequency.

(6) Channel switch. The channel switch, placarded **CHAN,** is a pushbutton switch which will put the receiver control unit into the channel mode when momentarily depressed, or into the program mode when held depressed for more than two seconds.

(7) Power and volume control. The power and volume control, placarded **OFF, VOL** controls operation of the receiver control unit. Clockwise rotation from the **OFF** position applies power to the system and continued clockwise rotation increases volume.

(8) Standby frequency display. Displays the standby (inactive) frequency.

c. Operating Procedures.

(1) Equipment turn-on. The receiver and the control unit are turned on by clockwise rotation of the power and volume knob.

(2) *Frequency selection.*

(a) Standby frequency entry mode. When the receiver control unit is in the standby frequency entry mode, the active frequency (in the active frequency display) is selected by changing the frequency in the standby frequency display, then transferring the selected frequency to the active frequency display by depressing the frequency transfer switch. The frequency in the standby frequency display is changed by means of the megahertz and kilohertz tuning knobs on the receiver control unit. The receiver control unit will remain tuned to the frequency in the active frequency display as long as the receiver control unit is in the standby frequency entry mode.

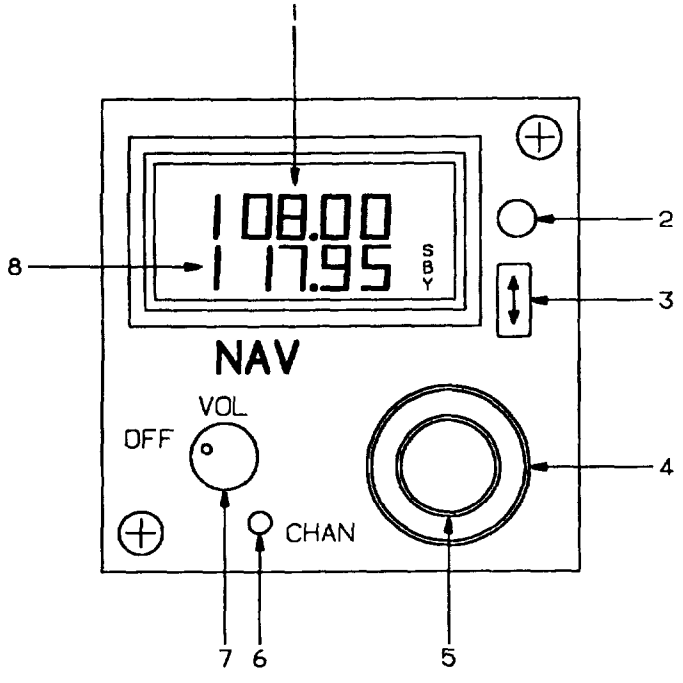

1. Active Frequency Display
2. Photocell
3. Frequency Transfer Switch
4. Megahertz Tuning Knob
5. Kilohertz Tuning Knob
6. Channel Switch
7. Power and Volume Control
8. Standby Frequency Display

Figure 3-23. VHF Navigation Receiver Control Unit (KFS 579A)

(b) Active frequency entry *mode.* When the receiver control unit is in the active frequency entry mode, the active frequency (in the active frequency display) is changed directly by rotating the kilohertz and megahertz tuning knobs. The receiver control unit is changed to the active frequency selection mode by holding the transfer switch depressed for longer than 2 seconds. Momentarily depressing the frequency transfer switch will change the receiver control unit back to the standby entry mode and will return the standby frequency display to the frequency displayed before entering the active frequency mode.

(c) *Channel mode.* Depressing the channel switch (placarded **CHAN)** will put the receiver control unit into the channel mode. When the receiver control unit is in the channel mode, the channel number is displayed in the active frequency display and the channel frequency is displayed in the standby frequency display. Channel frequencies have to be set with the unit in the program mode.

When the receiver control unit is in the channel mode, the receiver will be tuned to the frequency that is displayed in the standby frequency display. If no channels have been programmed, the receiver control unit will display channel 1 **(CH 1)** with dashes in the standby frequency display for five seconds, then the unit will tune the receiver to the last frequency displayed in the active frequency display.

Depressing the transfer switch for 2 seconds will change the receiver control unit to the active frequency entry mode.

(3) Program mode. The frequencies and channel numbers used in the channel mode must be programmed into memory with the receiver control unit in the program mode.

Depressing the channel switch **(CHAN)** for longer than 2 seconds will put the receiver control unit into the program mode. The channel number that was last used will be displayed and flash in the active frequency display. With the channel number flashing, rotating the tuning knobs will change the channel number. A channel number with no programmed frequency will have dashes in the standby frequency display. In this case the receiver will be tuned to the last valid frequency displayed in the active frequency display. Taking the receiver control unit out of the program mode with dashes in the standby frequency display will unprogram that channel. Depressing the frequency transfer switch will cause the channel number to stop flashing and the frequency to start flashing. The frequency can then be changed by rotating the tuning knobs. Depressing the frequency transfer switch again will cause the frequency to stop flashing and the channel to start flashing.

The receiver control unit will be returned to the standby frequency entry mode by depressing the channel **(CHAN)** switch **(CHAN)** or by a period of no activity for 20 seconds. The frequency mode prior to channel or program mode will be resumed, with the receiver tuned to the frequency in the active frequency display.

3-26. TACAN SYSTEM (KTU 709).

a. Introduction. The TACAN system is a polar coordinate UHF navigation system that provides relative bearing and slant-range distance information with respect to a selected TACAN or VORTAC ground station. The effective range of the TACAN is limited to line of sight. Actual operating range depends on the altitude of the aircraft, weather, type of terrain, location and altitude of the ground transmitter, and transmitter power. The TACAN system is protected by a 3-ampere circuit breaker, placarded TACAN, located on the right sidewall circuit breaker panel (fig. 2-14).

b. VHF Navigation Receiver/TACAN System *Control Unit (KFS 579A) Controls and Functions.*

(1) Active frequency display. Displays the active frequency or channel (frequency or channel to which the receiver is tuned).

(2) Photocell. The built-in photocell automatically controls display brightness.

(3) Frequency transfer switch. The frequency transfer switch is a pushbutton switch which transfers the frequency or channel in the standby display to the active display and the frequency in the active display to the standby display each time it is depressed.

Depressing the frequency transfer switch for more than 2 seconds while in the standby entry mode will switch the receiver control unit to the active entry mode.

Momentarily depressing the frequency transfer switch while in the active entry mode will return the receiver control unit to the standby entry mode.

(4) TACAN units digits, NAV kilohertz, and TACAN X or Y tuning knob. The TACAN units digits, NAV kilohertz, and **TACAN X** or **Y** tuning knob is the larger of the two knobs which are used to set the NAV frequency or TACAN channel in the standby frequency display. Rotation of this knob sets the three digits to the left of the decimal point in the standby frequency display or the 10's and 100's digits of a TACAN channel depending on the selected mode. The numbers will roll over at the upper and lower frequency or channel limits.

(5) TACAN tens and hundreds digits and NAV megahertz digits *tuning knob. The* TACAN tens and hundreds digits and NAV megahertz digits knob is the

smaller of two concentric knobs which are used to set the frequency or channel in the display. Rotation of the smaller tuning knob sets the two digits to the right of the decimal point in the standby frequency display in 50 kilohertz increments or the **X** and **Y TACAN** channels. **X** channels are selected with the knob in and **Y** channels are selected with the knob out. The numbers will roll over at the upper and lower frequency limits.

(6) Mode switch, The mode switch, placarded **MODE,** is a pushbutton switch which is used to select whether TACAN channel or frequency is used in the active frequency or channel display.

(7) Power and volume control. The power and volume control, placarded **OFF, VOL** controls operation of the receiver control unit. Clockwise rotation from the OFF position applies power to the system and continued clockwise rotation increases volume.

(8) Standby frequency display. Displays the standby (inactive) frequency or channel.

c. Operating Procedures.

(1) Equipment turn-on. The receiver and the control unit are turned on by clockwise rotation of the power and volume knob.

(2) Frequency selection.

(a) Standby frequency entry *mode.* When the receiver control unit is in the standby frequency or channel entry mode, the active frequency or channel (in the active frequency or channel display) is selected by changing the frequency or channel in the standby frequency display, then transferring the selected frequency or channel to the active display by depressing the transfer switch. The frequency or channel in the standby frequency or channel display is changed by means of the tuning knobs on the control unit. The control unit will remain tuned to the frequency or channel in the active display as long as the control unit is in the standby entry mode.

(b) Active frequency entry mode. When the receiver control unit is in the active frequency or channel entry mode, the active frequency or channel (in the active frequency or channel display) is changed directly by rotating the tuning knobs. The receiver control unit is changed to the active frequency or channel selection mode by holding the transfer switch depressed for longer than 2 seconds. Momentarily depressing the transfer switch will change the receiver control unit back to the standby entry mode and will return the standby frequency or channel display to the frequency or channel displayed before entering the active mode.

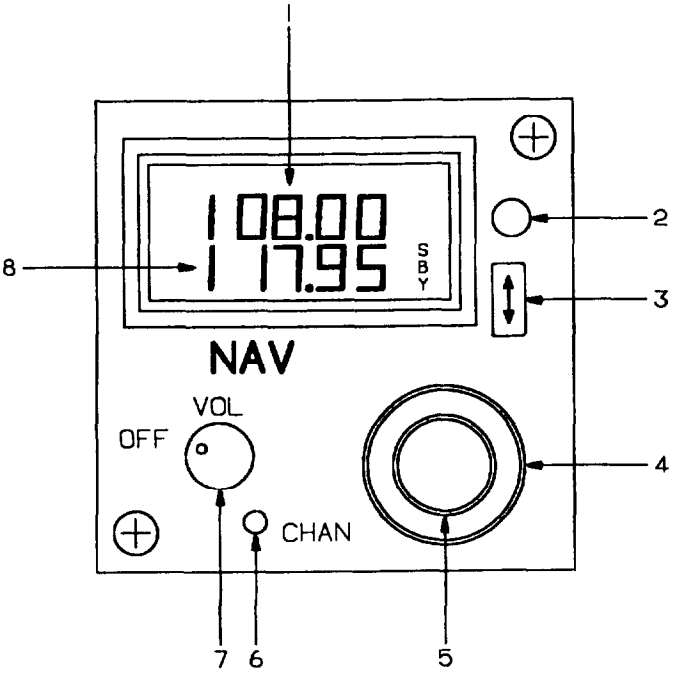

1. Active Frequency Display
2. Photocell
3. Frequency Transfer Switch
4. Megahertz Tuning Knob
5. Kilohertz Tuning Knob
6. Channel Switch
7. Power and Volume Control
8. Standby Frequency Display

A958W03C0372 C

Figure 3-24. VHF Navigation Receiver/TACAN System Control Unit (KFS 579A)

3-27. AUTOMATIC DIRECTION FINDER (ADF) RECEIVER (KDF 806).

a. Description. The ADF receiver (fig, 3-24) provides aural reception of signals from a selected ground station and indicates relative bearing to that station. The ground station must be within the frequency range of 190 to 1750 kHz. In the antenna **(ANT)** mode the ADF receiver functions as an aural receiver, providing only an aural output of the received signal. In automatic direction finder **(ADF)** mode it functions as an automatic direction finder receiver in which relative bearing to the station is presented on an associated bearing indicator, and an aural output of the received signal is provided. The ADF receiver is powered through a 2-ampere circuit breaker, placarded **ADF,** located on the right sidewall circuit breaker panel (fig. 2-7).

b. ADF Control Unit Operating Controls, Indicators, and Functions.

(1) Active frequency display. Displays the active frequency (frequency to which the receiver is tuned).

(2) Photocell. The built-in photocell automatically controls display brightness.

(3) Frequency transfer switch. The frequency transfer switch is a pushbutton switch which transfers the frequency in the standby display to the active display and the frequency in the active display to the standby display each time it is depressed.

Depressing the frequency transfer switch for more than 2 seconds while in the standby entry mode will switch the receiver control unit to the active entry mode.

Momentarily depressing the frequency transfer switch while in the active entry mode will return the receiver control unit to the standby entry mode.

(4) Kilohertz (hundreds) tuning knob. The kilohertz (hundreds) tuning knob is the larger of two concentric knobs which are used to set the frequency in the standby frequency display. Rotation of the larger tuning knob sets the hundreds kilohertz digits in the standby frequency display. The numbers will roll over at the upper and lower frequency limits. Rotating the kilohertz (hundreds) tuning knob in either direction with the receiver control unit in the channel mode will change the channel number and its corresponding frequency.

(5) Kilohertz (tens and ones) tuning knob. The kilohertz (tens and ones) tuning knob is the smaller of two concentric knobs which are used to set the frequency

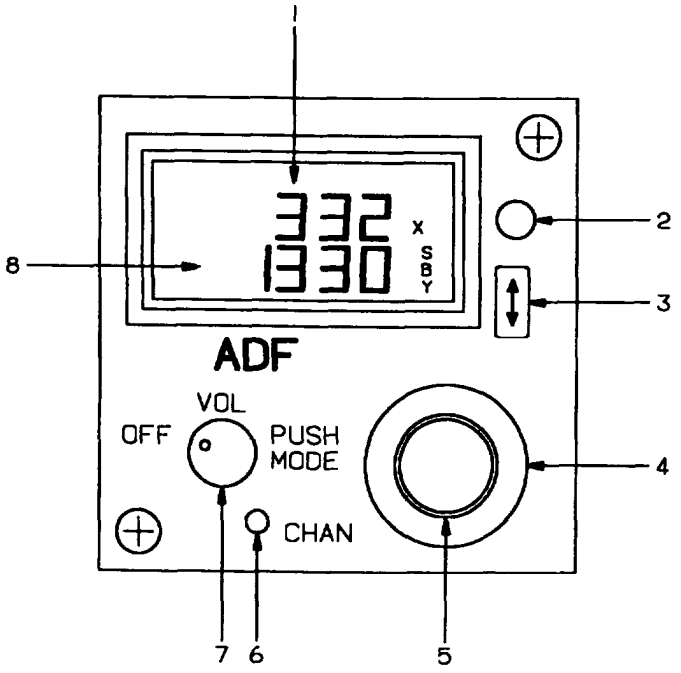

1. Active Frequency Display
2. Photocell
3. Frequency Transfer Switch
4. Kilohertz (100's) Tuning Knob
5. Kilohertz (10's and Pull Out for 1 to 10) Tuning Knob
6. Channel Switch
7. Power, Volume, and MODE Control
8. Standby Frequency Display

A95BW03C0373 C

Figure 3-25. ADF Receiver *Control Unit*

in the standby frequency display. Rotation of the kilohertz tuning knob sets the tens kilohertz digits in the standby frequency display. Rotating this knob while pulled out changes the one through nine kilohertz portion of the frequency. The numbers will roll over at the upper and lower frequency limits. Rotating the kilohertz (tens and ones) tuning knob in either direction with the receiver control unit in the channel mode will change the channel number and its corresponding frequency.

(6) Channel switch. The channel switch, placarded **CHAN,** is a pushbutton switch which will put the receiver control unit into the channel mode when momentarily depressed, or into the program mode when held depressed for more than two seconds.

(7) Power, volume, and mode control. The power, volume, and mode control, placarded **OFF, VOL, PUSH MODE,** controls operation of the receiver control unit. Clockwise rotation from the **OFF** position applies power to the system and continued clockwise rotation increases volume.

(8) Standby frequency display. Displays the standby (inactive) frequency.

c. Operating Procedures.

(1) Equipment turn-on. The receiver and the control unit are turned on by clockwise rotation of the power and volume knob.

(2) Frequency selection.

(a) Standby frequency entry mode. When the receiver control unit is in the standby frequency entry mode, the active frequency (in the active frequency display) is selected by changing the frequency in the standby frequency display, then transferring the selected frequency to the active frequency display by depressing the frequency transfer switch. The frequency in the standby frequency display is changed by means of the kilohertz (hundreds) tuning knob and kilohertz (tens and ones) tuning knobs on the receiver control unit. The receiver control unit will remain tuned to the frequency in the active frequency display as long as the receiver control unit is in the standby frequency entry mode.

(3) Active frequency entry mode. When the receiver control unit is in the active frequency entry mode, the active frequency (in the active frequency display) is changed directly by rotating the tuning knobs. The receiver control unit is changed to the active frequency selection mode by holding the transfer switch depressed for longer than 2 seconds. Momentarily depressing the frequency transfer switch will change the receiver control unit back to the standby entry mode and will return the standby frequency display to the frequency displayed before entering the active frequency mode.

(4) Channel mode. Depressing the channel switch (placarded **CHAN)** will put the receiver control unit into the channel mode. When in the channel mode, the channel number is displayed in the active frequency display and the channel frequency is displayed in the standby frequency display. Channel frequencies must be set with the unit in the program mode.

When the receiver control unit is in the channel mode, the receiver will be tuned to the frequency that is displayed in the standby frequency display. If no channels have been programmed, the receiver control unit will display channel 1 **(CH 1)** with dashes in the standby frequency display for five seconds, then the unit will tune the receiver to the last frequency displayed in the active frequency display.

Depressing the transfer switch for 2 seconds will change the receiver control unit to the active frequency entry mode.

(5) Program mode. The frequencies and channel numbers used in the channel mode must be programmed into memory with the receiver control unit in the program mode.

Depressing the channel switch **(CHAN)** for longer than 2 seconds will put the receiver control unit into the program mode. The channel number that was last used will be displayed flashing in the active frequency display. With the channel number flashing, rotating the tuning knobs will change the channel number. A channel number with no programmed frequency will have dashes in the standby frequency display. In this case the receiver will be tuned to the last valid frequency displayed in the active frequency display. Taking the receiver control unit out of the program mode with dashes in the standby frequency display will unprogram that channel. Depressing the frequency transfer switch will cause the channel. number to stop flashing and the frequency to start flashing. The frequency can then be changed by rotating the tuning knobs. Depressing the frequency transfer switch again will cause the frequency to stop flashing and the channel to start flashing.

The receiver control unit will be returned to the standby frequency entry mode by depressing the channel **(CHAN)** switch **(CHAN)** or a period of no activity for 20 seconds. The frequency mode prior to channel or program mode will be resumed, with the receiver tuned to the frequency in the active frequency display.

d. Normal Operation.

1. Power and mode switch - **ANT, ADF,** or **TONE (BFO).**

2. Tuning knobs - Set desired frequency.

3. **ANT** function - Position power and mode switch to **ANT.** Select **ADF** on audio system and adjust volume.

4. **ADF** function - Position power and mode switch to **ADF.** Bearing pointer will indicate relative bearing to tuned station.

5. **TONE** function - Position power and mode switch to **TONE** (BFO). A l000-Hz tone will identify keyed CW stations.

(1) Self-test.

1. Power and mode switch - **ADF.**
2. Tuning knobs - Tune a nearby NDB, compass locator, or broadcast station.
3. **TEST** switch - Depress. Bearing pointer will rotate 90 degrees from the previous valid indication. Release **TEST** switch and verify that the bearing pointer returns to previous valid indication.

NOTE

If the signal received is weak or of poor quality, bearing pointer rotation will be slow.

3-28. RADIO MAGNETIC INDICATORS (KNI 582).

a. Description. The pilot and copilot are each provided with an identical radio magnetic indicator (RMI), which provides aircraft magnetic heading and radio bearing information to a selected **VOR, TACAN, NDB,** or or **FMS** waypoint. The RMIs are powered through two l-ampere circuit breakers, placarded **RMI NO. 1** and **NO. 2,** located on the right sidewall circuit breaker panel (fig. 2-7).

b. RMI Controls and Functions (KNI 582) (fig. 3-25).

(1) Heading flag. The heading flag comes in to view when heading information displayed on the compass card is invalid.

(2) Lubber line. Aircraft heading is read from the compass card under the lubber line.

(3) Double bar pointer. The double bar pointer displays the magnetic heading to the selected **VOR, TACAN, NDB,** or **FMS** waypoint.

(4) Compass card. This rotating card repeats gyro stabilized magnetic compass information. Aircraft heading is read from the compass card under the orange lubber line.

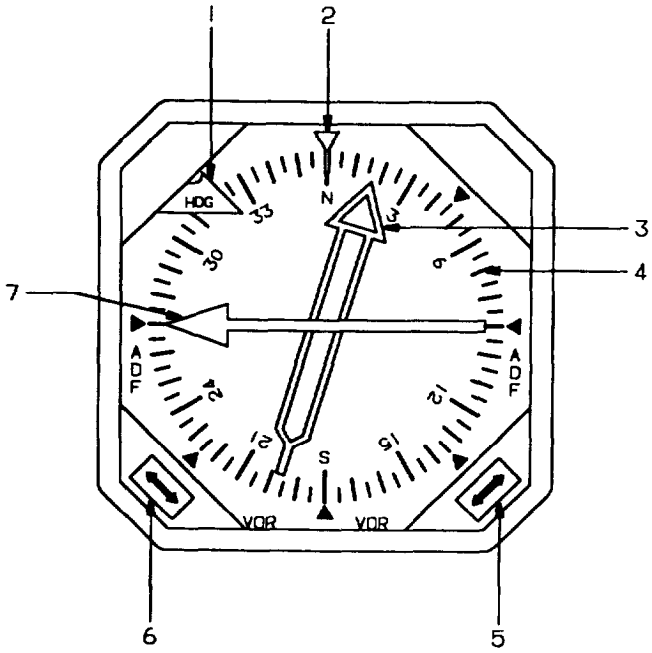

1. Heading Flag
2. Lubber Line
3. Double Bar Pointer
4. Compass Card
5. Double Bar Pointer ADF-VOR Pushbutton Selector Switch
6. Single Bar Pointer ADF-VOR Pushbutton Selector Switch
7. Single Bar Pointer

A958W03C0388 C

Figure 3-26. Radio Magnetic Indicator (RMI)

(5) Double bar pointer **ADF-VOR** pushbutton selector switch. The double bar pointer **ADF-VOR** pushbutton selector switch is used to select the NAV system providing bearing information to the double bar pointer.

(6) Single bar pointer **ADF-VOR** pushbutton selector switch. The single bar pointer **ADF-VOR** pushbutton selector switch is used to select the NAV system providing bearing information to the single bar pointer.

(7) Single bar pointer. The single bar pointer displays the magnetic heading to the selected **VOR, TACAN, NDB,** or **FMS** waypoint.

3-29. FLIGHT MANAGEMENT SYSTEM (GNS-XLS).

a. Description. The flight management system is an integrated system which provides the flight crew with centralized control of the navigation sensors, flight planning, fuel management, and frequency management for most avionics. The system uses a full color flat panel liquid crystal display (LCD), an alpha-numeric and function keyboard, a global positioning system sensor (GPS), and a navigation database.

b. Database. An electronic database is loaded into the flight management system at the time of manufacture. The database includes current worldwide navaids and airport reference points for all airports with runways of 2000 feet or greater. The database includes:

(1) VHF navaids. All VHF ground based navaids including:

VOR/DME stations.

VOR only stations.

DME only stations.

VORTAC stations.

TACAN stations.

ILS/DME stations.

(2) Airport reference points. All airports with hard surfaced runways longer than 2000 feet.

(3) Waypoints, intersections, and approaches.

High altitude waypoints.

Low altitude waypoints.

Standard instrument departure (SID) waypoints.

Standard terminal arrival route (STAR) waypoints.

Approach intersections.

Non-precision approaches.

(4) Data base revisions. System owners are shipped database revision every 28 days in the form of an electronic memory card for the first year from the date of warranty registration, and by subscription thereafter.

c. Controls, indicators, and functions (GNS-XLS control-display unit) (fig. 3-26).

(7) Navigation key. Depressing the navigation key (placarded **NAV)** will cause the first page of the navigation section to be displayed on the flight management system control-display unit. The next sequential page in the navigation section will be displayed with each subsequent depression of the navigation key.

(2) Vertical navigation key. Depressing the vertical navigation key (placarded **VNAV)** will cause the first page of the vertical navigation section to be displayed on the flight management system control-display unit. The next sequential page in the vertical navigation section will be displayed with each subsequent depression of the vertical navigation plan key.

(3) Airborne flight information key.

NOTE

AFIS system not installed in Army aircraft.

Depressing the airborne flight information key (placarded **AFIS)** will cause a message "not installed" to be displayed on the flight management system control-display unit.

(4) Flight plan key. Depressing the flight plan key (placarded **FPL)** will cause the first page of the flight plan section to be displayed on the flight management system control-display unit. The next sequential page in the flight plan section will be displayed with each subsequent depression of the flight plan key.

(5) Power key. Depressing the power key (placarded **ON)** will apply power to the system. After a warm-up period of approximately 5 minutes, the display will initially appear at maximum brightness. Holding the power key depressed for approximately 3 seconds will initiate the system power off sequence. During the sequence the display will annunciate **SYSTEM TURNING OFF.** This time delay and annunciation are designed to prevent inadvertent system shutdown.

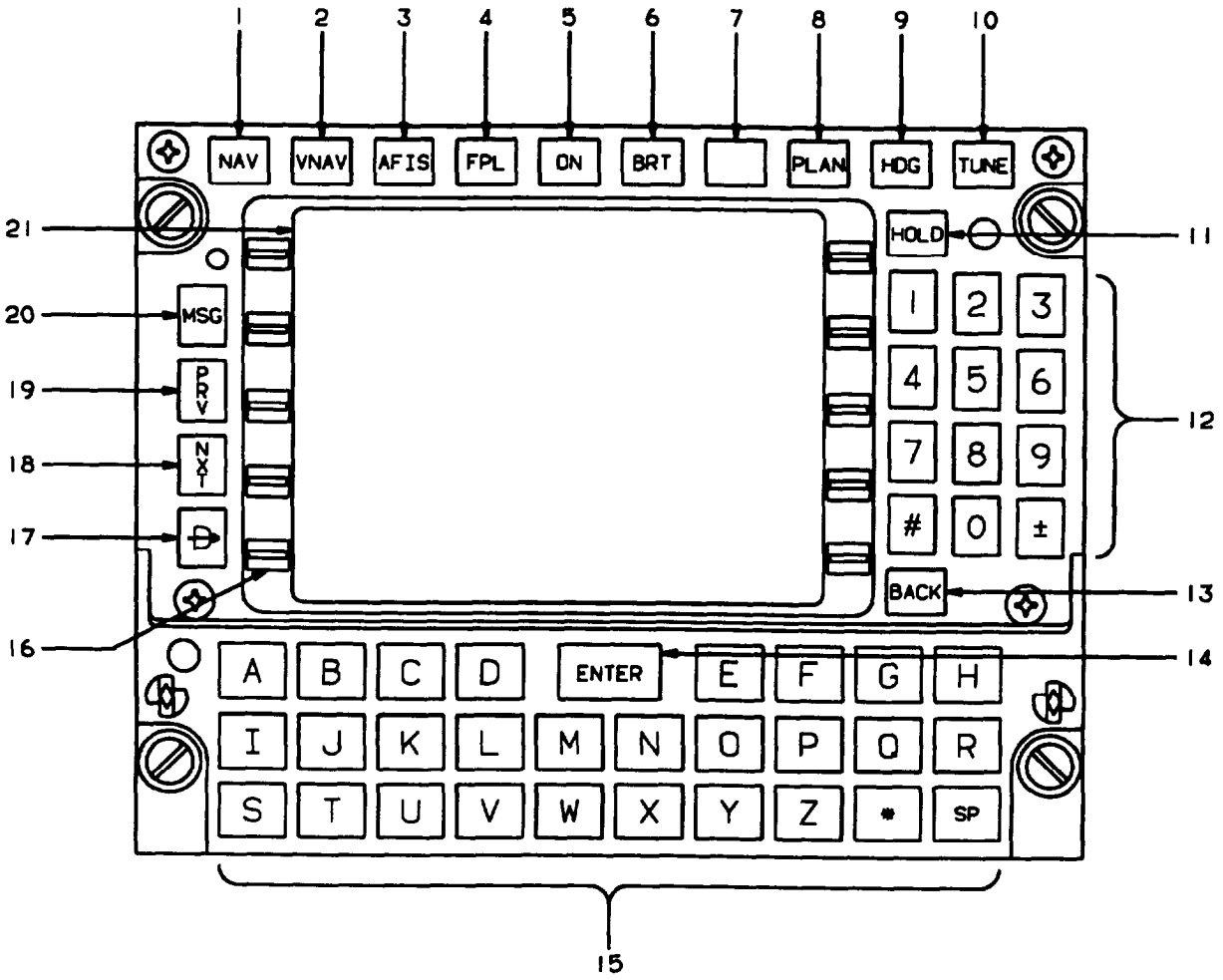

1. Navigation Display Selector Key
2. Vertical Navigation Display Selector Key
3. Airborne Flight Information System Display Selector Key
4. Flight Plan Display Selector Key
5. Power ON/Off Key
6. Display Brightness Adjustment Key
7. Not Used
8. Planning Display Selector Key
9. Heading Display Selector Key
10. Tuning Display Selector Key
11. Holding Key
12. Numeric Keys
13. Back Key
14. ENTER Key
15. Letter Keys
16. Line Select Keys
17. Direct To Key
18. Next Page Key
19. Previous Page Key
20. Message Key/Annunciator
21. Display Screen

A95BW03C0377 C

Figure 3-27. Flight Management System Control Display Unit (GNS-XLS)

NOTE

The flight management system may be left on and turned on and off by the **AVIONICS MASTER PWR** switch.

(6) Brightness key. Depressing the brightness key (placarded **BRT)** will change the illumination of the flight management system control-display unit. The flight management system display will initially come on at full brightness when power is applied. Hold the brightness key depressed to dim the display to the desired level. The brightness key is also used to align the line selection keys.

(7) Blank key. This key is not used in this installation.

(8) Planning key. Depressing the planning key (placarded **PLAN)** will cause the first page of the planning procedures section to be displayed on the flight management system control-display unit. The next sequential page in the planning procedures section will be displayed with each subsequent depression of the planning key.

(9) Heading key. Depressing the heading key (placarded **HDG)** will cause the heading section page to be displayed on the flight management system control-display unit.

(10) Tuning key. Depressing the tuning key (placarded **TUNE)** will cause the first Rage of the remote tuning section to be displayed on the flight management system control-display unit. The next sequential page in the remote tuning section will be displayed with each subsequent depression of the tuning key.

(11) Holding key. Depressing the holding key (placarded **HOLD)** will cause the first page of the navigation section to be displayed on the flight management system control-display unit if the cursor is positioned over a waypoint identifier, and it is appropriate to program a holding pattern or procedure turn at that waypoint. If the cursor is not displayed, depressing the holding key will access the position fix page and is used for position updates and verification as well as entering the primary navigation mode.

(12) Numeric keys. The numeric keys are used to enter numbers 0 through 9, #, and plus or minus sign.

(13) Back key. The back key (placarded **BACK)** is used to erase errors and page backward when the cursor is not displayed.

(14) Enter key. Depressing the enter key (placarded **ENTER)** will enter displayed data into the computer memory.

(15) Alpha keys. The alpha keys are used to enter the 26 letters of the alphabet and the asterisk.

(16) Line select keys. Depressing a line select key will place the cursor in the field next to that key. Dots displayed on the sides of the display indicate active line select keys for each individual page. Depressing the enter key will display the next step of the highlighted selection.

(17) Direct to key. Depressing the direct to key (placarded **D** on a horizontal arrow) will cause the first page of the direct to section to be displayed on the flight management system control-display unit. The next sequential page in the direct to section will be displayed with each subsequent depression of the direct to key.

(18) Next key. Depressing the next key (placarded **NXT)** will cause the next page of a section or subsection to be displayed on the flight management system control-display unit.

(19) Previous key. Depressing the previous key (placarded **PREV)** will cause the previous Rage of a section or subsection to be displayed on the flight management system control-display unit.

(20) Message key/message annunciator. The message annunciator will flash to alert the crew that a message needs to be viewed on one of the **SYSTEM MESSAGES** or **SENSOR MESSAGES** pages.

Depressing the message key (placarded **MSG)** will display the message. The newest message will be indicated by a flashing asterisk. If the message requires action to be taken by the crew, the message annunciator will remain steadily illuminated until the action is completed. If no action is required the message annunciator will extinguish when the message page is exited.

(21) Display. Flat panel color liquid crystal display (LCD). The display is color coded to assist the crew in recognizing information as follows:

(a) Magenta. Magenta is used for **TO** waypoint, **VNAV,** and **TGT** speeds.

(b) Cyan. Cyan is used for date and time, tuned frequencies or codes, GRIS, and altitudes.

(c) Green. Green is used for navigation, fuel data, and general page data.

(d) Red. Red is used for warnings.

(e) Blue. Blue is used for waypoint numbers.

d. Pages Displayed at Power-Up.

(1) Self test page. The self test page (fig. 3-27) appears when power is applied to the system. While the self test page is displayed the computer performs a self test that must be successfully completed before proceeding. If a problem is detected the **SELF TEST** display may be replaced by a **NO DATA RECEIVED** message.

(2) Initialization page. After the self test is completed, the initialization page (fig. 3-28) will appear.

(a) DATE. This line displays the current Greenwich date (day, month, and year). When the date is entered, the numerals 01 through 12 are entered for the months. The computer changes this month designation to its alpha equivalent.

(b) GMT. This line displays the time of day in Greenwich Mean Time in hours and minutes.

(c) IDENT. This line displays the airport identifier of the nearest airport to the aircraft's position at shutdown. Dashes will be displayed in this line when the aircraft's position coordinates are displayed on the **POS** lines.

(d) POS. This line displays the aircraft's position at shutdown. Dashes will be displayed in this line if an airport identifier is displayed on the **IDENT** line.

(e) Software status. The bottom line of the display shows the unit part number and the software modification status number.

NOTE

The **INITIALIZATION** page cannot be recalled once **DATE, GMT,** and **POS** have been entered. The **INITIALIZATION** page may be displayed again by removing and then re-applying power to the system.

e. Navigation Section.

(1) NAVIGATION 1/4 (page 1 of 4) (fig. 3-29).

(a) FR, DIRECT, HOLD, PROCEDURE TURN, DME ARC. or **PSEUDO VORTAC** line.

1 FR. If **FR** (from) is displayed on this line, the from waypoint identifier will be displayed on the left and the time of departure from or overhead at that waypoint will be displayed in the right field.

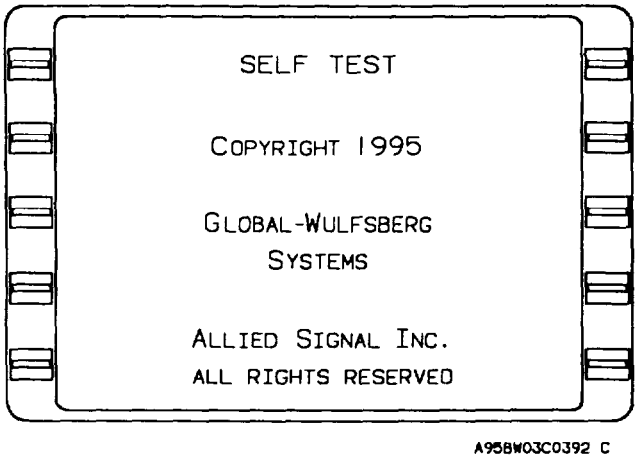

Figure 3-28. FMS Self Test Page

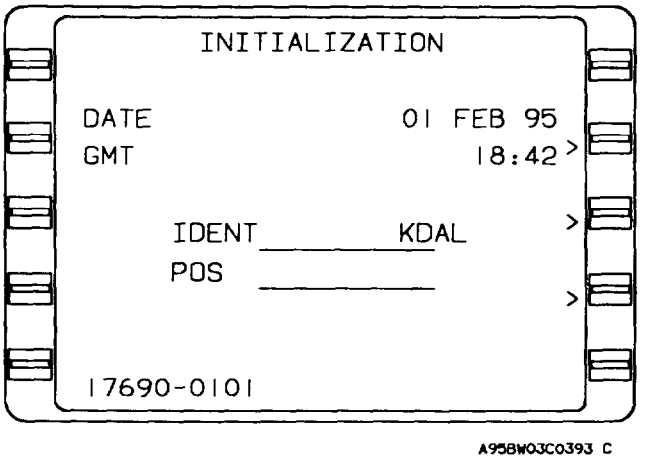

Figure 3-29. FMS Initialization Page

2 DIRECT. **DIRECT** displayed on this line indicates that the system is navigating to the next waypoint via a direct route. The time overhead at the last waypoint will be displayed on the right field.

3 HOLD. This line indicates that a holding pattern has been initiated. **RIGHT** or **LEFT** displayed on the left side of the field indicates the direction of turns to fly the pattern as entered on the **HOLD** page. **MANUAL** or **AUTO** on the right side of the field indicates the programmed exit mode as entered on the **HOLD** page. Selecting **MANUAL** initiates a continuous hold at the fix until action is taken by the crew to exit the hold. Selecting **AUTO** executes an exit the second time the aircraft passes over the fix. The system then sequences to the next waypoint on the flight plan. This field can be edited by using the **BACK** key.

4 PROCEDURE TURN. Indicates that a procedure turn has been initiated.

5 DME ARC. Indicates that a DME arc has been initiated.

6 PSEUDO VORTAC. Indicates that a system is navigating to a pseudo VORTAC. This line displays the from **(FR)** waypoint identifier on the left with the time of departure or time overhead at that waypoint displayed on the right. This line can also display **DIRECT, HOLD, PROCEDURE TURN, DME ARC,** or **PSEUDO VORTAC.**

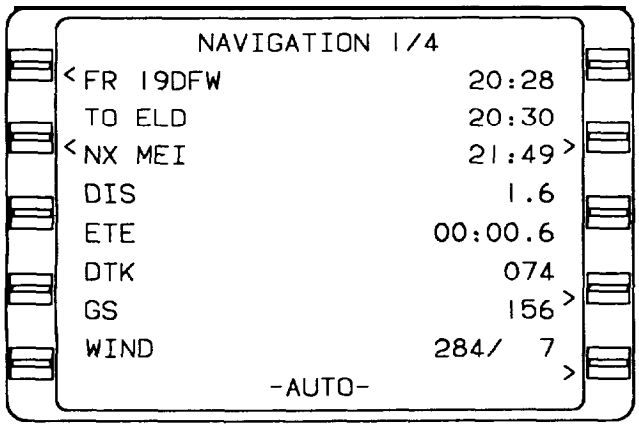

Figure 3-30. FMS Navigation 1/4 Page

(b) TO, AR, HP, or PT line.

1 TO. When **TO** is displayed on this line, the **TO** waypoint identifier will be displayed in the left field and the ETA at that waypoint will be displayed in the right field.

2 AR (DME arc). When **AR** (DME arc) is displayed on this line, the identifier of the DME arc waypoint being flown to will be displayed in the left field and the ETA at that waypoint will be displayed in the right field.

NOTE

When the system is flying a **DME ARC,** the displayed data will momentarily show dashes as the system changes arc segments and new computations are made.

3 HP (holding pattern). **HP** (holding pattern) displayed on this line indicates that a holding pattern has been programmed at the waypoint being flown to. The to **HP** (holding pattern) waypoint identifier being flown to will be displayed in the left field and the ETA at that waypoint will be displayed in the right field.

4 PT (procedure turn). **PT** (procedure turn) displayed on this line indicates that a holding pattern entry with an auto exit is-programmed at a waypoint. The FMS will fly the appropriate entry the first time over the procedure turn **(PT)** waypoint. The next time over the waypoint, the system will sequence to the following waypoint on the flight plan.

(c) NX, HDG SELECT, or INTERCEPT HDG line.

1 NX. Displays the next waypoint identifier on the active flight plan in the left field and the ETA at that waypoint in the right field. This line is displayed during waypoint alert only.

2 HDG SELECT. **HDG SELECT** will be annunciated when heading mode has been selected but with no intercept. Commanded heading and turn direction will be annunciated in the right field.

3 INTERCEPT HDG. ***INTERCEPT HDG*** will be annunciated when heading mode has been selected and will intercept the next leg. Commanded

heading and turn direction will be annunciated in the right field.

(d) DIS. This line displays the distance **(DIS)** in nautical miles and tenths of miles from the aircraft's present position to the **TO** waypoint. During waypoint alert, the distance in whole nautical miles to the next **(NX)** waypoint is displayed in parentheses.

(e) ETE. This line displays the estimated time enroute in hours, minutes, and tenths of minutes, from the aircraft's present position to the **TO** waypoint based on current groundspeed.

(f) DTK. This line displays the desired track **(DTK).** The desired track is me great circle course in whole degrees between the **FROM** and **TO** waypoints. When in the **PSEUDO VORTAC** mode, the desired track is entered by the crew. During a waypoint alert, desired track to the next **(NX)** waypoint is displayed in parentheses.

NOTE

Dashes will be displayed in the desired track **(DTK)** field if the **FROM** way-point or present position are north of N *70°* or south of S *60°* latitude, unless a manual magnetic variation **(MAC VAR)** is entered or a discrete **MAG/ TRUE** switch is moved to the **TRUE** position.

(g) GS. This line displays the current groundspeed **(GS).**

(h) WIND. This line displays the current wind direction referenced to true north, and wind speed in knots.

(i) AUTO. This line displays the selected leg change mode. Automatic **(AUTO)** or manual **(MAN)** may be selected by using the **BACK** key.

(2) NAVIGATION 1/4 (with programmed holding paltern).

(a) HOLD. This line indicates mat a holding pattern has been initiated. **RIGHT** or **LEFT** displayed on the left side of the field indicates the direction of turns to fly the pattern as entered on the **HOLD** page. **MANUAL** or **AUTO** on the right side of the field indicates the programmed exit mode as entered on the **HOLD** page. Selecting manual initiates a continuous hold at the fix until action is taken by the crew to exit the hold. Selecting **AUTO** executes an exit the second time the aircraft passes over the fix. The system then sequences to the next waypoint on the flight plan. This field can be edited by using the **BACK** key.

(b) AT. This line displays the identifier of the holding fix for the holding pattern in use on the left side, and the estimated time of arrival (ETA) of the next time over the holding fix. This line can also display the following:

1 HP. This line displays the identifier of the holding fix for which a holding pattern is programmed in the left field with the ETA at the holding fix in the right field.

(c) PT. This line displays the identifier of the holding fix for which a procedure turn is programmed in the left field with the ETA over the holding fix in the right field.

(d) AR. This line displays the identifier of the holding fix for which a DME arc is programmed in the left field with the ETA over the fix in the right field.

(e) Holding status message.

1 DIRECT ENTRY. This display message indicates that the system will use a direct entry into the holding pattern. This message will appear 30 seconds prior to entering the holding pattern. The display message will change to **HOLDING** after crossing me holding fix.

2 TEARDROP ENTRY. This display message indicates that the system will use a teardrop entry into the holding pattern. This message will appear 30 seconds prior to entering the holding pattern. The display message will change to **HOLDING** after crossing the holding fix the second time.

3 PARALLEL ENTRY. This display message indicates that the system will use a parallel entry into the holding pattern. This message will appear 30 seconds prior to entering the holding pattern. The display message will change to **HOLDING** after crossing the holding fix the second time.

4 HOLDING. This message is normally displayed while holding.

5 EXIT HOLD. This message indicates that the system will exit the holding pattern the next time over the holding fix. The estimated time enroute to the holding fix is also displayed.

(f) DIS. This line displays the distance in nautical miles and tenths of nautical miles from the aircraft's present position to the holding fix.

(g) ETE. This line displays the estimated time enroute until the next time over the holding fix based on the path around the holding pattern.

(h) INBOUND CRS. This line displays the inbound holding course **(INBOUND CRS)** in degrees.

(i) GS. This line displays the current groundspeed.

(j) WIND. This line displays the current wind direction referenced to true north, and wind speed in knots.

NOTE

The leg change mode **(AUTO** or **MANUAL)** will not be displayed while holding.

(3) NAVIGATION 2/4 page (fig.3-30).

(a) FR, DIRECT, HOLD, PROCEDURE TURN, DME ARC, or **PSEUDO VORTAC** line. Same as in **NAVIGATION 1/4** page.

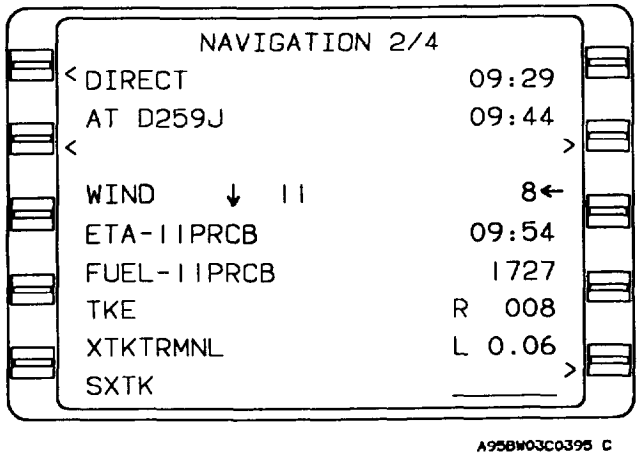

Figure 3-31. FMS Navigation 2/4 Page

(b) TO, AR, HP, or PT line. Same as in **NAVIGATION 1/4** page.

(c) NX, HDG SELECT, or INTERCEPT HDG line. Same as in **NAVIGATION 1/4** page.

(d) WIND. The first field in the wind line displays headwind or tailwind in knots preceded by an up arrow for a tailwind or a down arrow for a headwind. The second field displays the crosswind component in knots followed by a right pointing arrow for a left crosswind or a left pointing arrow for a right crosswind.

(e) ETA. This line displays the estimated time of arrival (ETA) at the last waypoint on the active flight plan.

(f) FUEL. This line displays the estimated fuel that will be remaining at the destination.

(g) TKE. Track error **(TKE)** is the difference between the desired track and the actual track in degrees. **R** (right) or **L** (left) is displayed preceding the track error in degrees to show the direction of error in relation to the desired track.

(h) XTK. Crosstrack **(XTK)** distance is the lateral displacement of the aircraft in nautical miles and tenths of a nautical mile to the left or right of the desired track (125 NM maximum). **TRMNL, APRCH,** or **ENRTE** will be displayed following **XTK** to indicate the approach mode that the system is presently using.

1 TRMNL. **TRMNL** will be displayed following **XTK** to show that the system is operating in the terminal approach mode.

2 APRCH. **APRCH** will be displayed following **XTK** to show that the system is operating in the approach mode.

3 ENRTE. **ENRTE** will be displayed following **XTK** to show that the system is operating in the enroute approach mode.

(i) SXTK. **SXTK** is the selected crosstrack distance entered by the flight crew to provide steering to an offset course parallel to the desired track (99.9 NM maximum).

(4) NAVIGATION 3/4 page (fig. 3-31).

(a) FR, DIRECT, HOLD, PROCEDURE TURN, DME ARC, or **PSEUDO VORTAC** line. Same as in **NAVIGATION 1/4** page.

(b) TO, AR, HP, or PT line. Same as in **NAVIGATION 1/4** page.

(c) NX, HDG SELECT, or INTERCEPT HDG line. Same as in **NAVIGATION 1/4** page.

(d) DRIFT. **DRIFT** angle is the angular difference between aircraft heading and the direction it is moving over the ground. Drift angle is displayed in degrees to the right **(R)** or left **(L)** of aircraft heading in the right field.

(e) VAR. The magnetic variation **(VAR)** in degrees is displayed in the right field preceded by an **E** (east) or a **W** (west). The flight management system automatically computes the magnetic variation between latitude N 70 00.00 degrees and latitude S 60 00.00 degrees. Manual variation may be entered. When manual variation is entered, it overrides the automatic computation, and is indicated by **MAN.**

(f) TAS. The **TAS** line displays the aircraft's true airspeed in knots from the air data computer. If true airspeed is manually inserted, **MAN** will be displayed.

(g) HDG. The **HDG** line displays the aircraft's heading in degrees from the aircraft's compass system. If heading is manually inserted, **MAN** will be displayed.

(h) BRG. The **BRG** line displays the aircraft's bearing in degrees from the aircraft's present position to the **TO** waypoint.

(i) TK: The **TK** line displays the aircraft's track angle in degrees.

(5) NAVIGATION 4/4 page (fig. 3-32).

(a) IDENT. The **IDENT** field displays the waypoint identifier of a fix to be overflown for position update.

(b) POS. The **POS** (position) fields display the current composite latitude and longitude in degrees, minutes, and hundredths of a minute.

(c) GPS. The **GPS** sensor will be listed with the radial difference between the individual sensor position and the composite position displayed in nautical miles and tenths of a nautical mile.

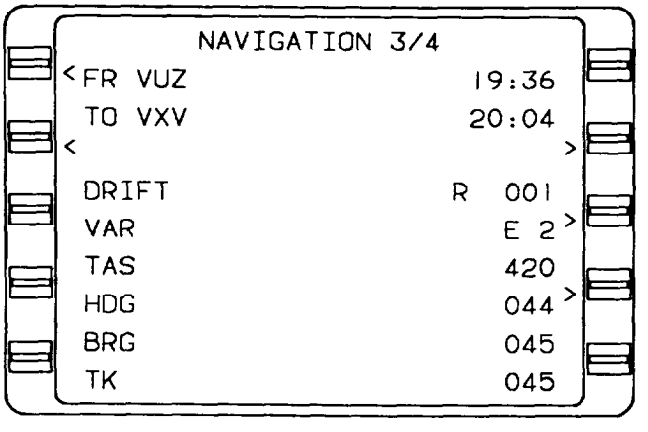

Figure 3-32. FMS Navigation 3/4 Page

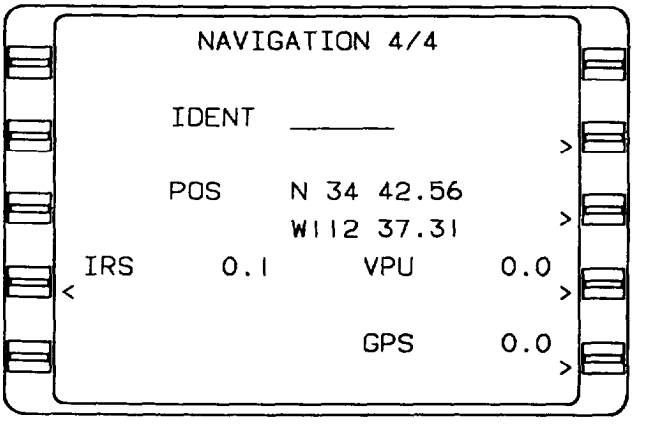

Figure 3-33. FMS Navigation 4/4 Page

NOTE

The **SENSOR MESSAGE** pages may be accessed by placing the cursor over the individual position sensor and depressing the **ENTER** key. Use the **NAV, PRV,** or **NXT** key to page through the sensor status pages. When all of the sensor status pages have been reviewed, **NAVIGATION 1/4** will again be displayed.

f. GPS Subsection Pages.

(1) GPS SUBSECTION 1/3 page (fig. 3-33).

(a) POS. The **POS** (position) fields display the current composite latitude and longitude in degrees, minutes, and hundredths of a minute.

(b) GPS. The **GPS** (global positioning system) fields display current **GPS** latitude and longitude in degrees, minutes, and hundredths of a minute. **GPS** position is only displayed when **GPS** is in the **NAV** mode.

(c) DIf. The **DIF** (difference) between the composite position and the sensor computed latitude and longitude in degrees.

(2) GPS SUBSECTION 2/3 page (fig. 3-34).

(a) GPS HPE. The **GPS HPE** (horizontal position error) field displays horizontal position error in nautical miles.

(b) GPS TIME. The **GPS TIME** field displays GPS Greenwich Mean Time in hours, minutes, and seconds. This time is displayed when at least one satellite is being tracked, otherwise the time field displays dashes.

NOTE

GPS TIME may vary by several seconds from GMT (Greenwich Mean Time) due to leap second input of UTC (coordinated universal time).

(c) STATE. This field displays the GPS receiver state:

1 Dashes. GPS receiver is idle or no mode data is available.

2 INITIALIZE. The GPS receiver is updated with initial position and time information.

3 SKY SEARCH. No almanac available. The GPS system is searching for any satellite in the visible table based on the internal or external time, data, and position and will assign channels in the order received.

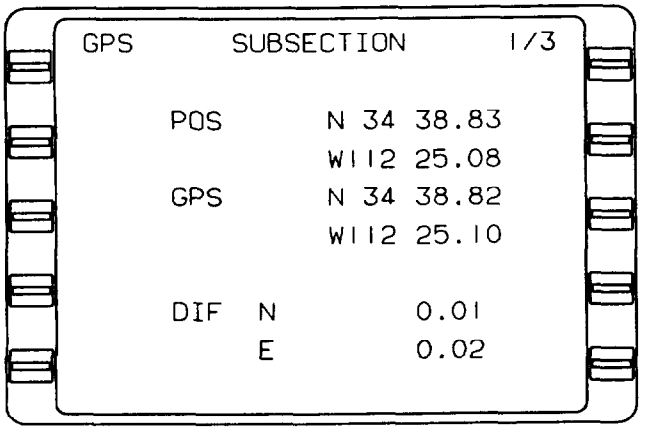

Figure 3-34. GPS Subsection 1/3 Page

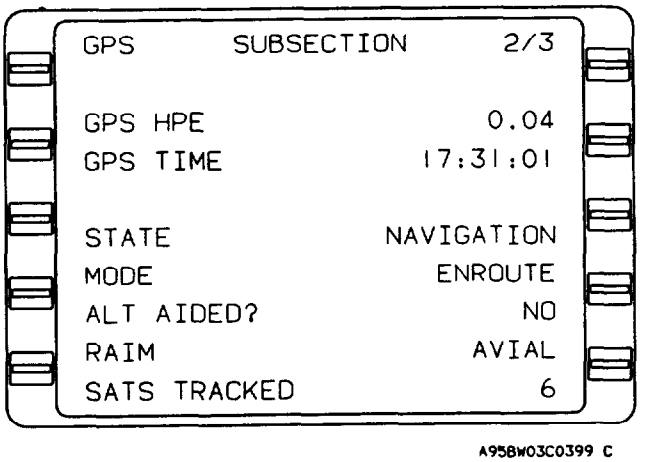

Figure 3-35. GPS Subsection 2/3 Page

4 ACQUISITION. Constellation selection, channel assignments, and carrier and code lock are in progress.

5 TRANSITION. The GPS receiver is transitioning from one state to another.

6 NAVIGATION. GPS receiver is in navigation mode and has at least a two dimensional position fix.

7 DR. The GPS system is in the dead reckoning **(DR)** mode. When GPS position is valid and sufficient satellite measurements are unavailable, the GPS receiver will continue to output valid position information for a maximum of 30 seconds while using the last known velocity and track information. The position will be invalid after 30 seconds.

(d) MODE. This line displays current GPS receiver mode of operation:

1 ENROUTE. GPS receiver is operating in the **ENROUTE** mode.

2 TERMINAL. GPS receiver is operating in the **TERMINAL** mode.

3 APPROACH. GPS receiver is operating in the **APPROACH** mode.

(e) ALT AIDED?. This line indicates whether or not the GPS receiver is using an externally supplied altitude for position calculation.

(f) RAIM. This line indicates whether **GPS RAIM** (receiver autonomy integrity monitoring) is available **(AVAIL)** or unavailable **(UNAVAIL).**

(g) SATS TRACKED. This line indicates the number of satellites that the GPS receiver is currently tracking.

(3) GPS SUBSECTION 3/3 page (fig. 3-35). This page displays the status of the GPS receiver. The GPS receiver is an 8 channel receiver. Information on up to 8 satellites can be displayed under 6 column titles as follows:

(a) GPS SAT. This field displays GPS satellite pseudo random noise (PRN) number.

(b) AZ. This field displays GPS satellite azimuth **(AZ)** position in degrees.

(c) EL. This field displays GPS satellite elevation **(EL)** in degrees above the horizon.

(d) SNR. This field displays GPS satellite signal to noise ratio **(SNR).**

(e) HLTH. This field displays GPS satellite health **(HLTH)** as **BAD** or **GOOD.**

(f) T. This field indicates whether or not GPS satellite is being tracked **(T)** by displaying **Y** (yes) or **N** (no).

g. Vertical Navigation Section (VNAV Key).

NOTE

VNAV system is advisory only, it is not coupled to the autopilot.

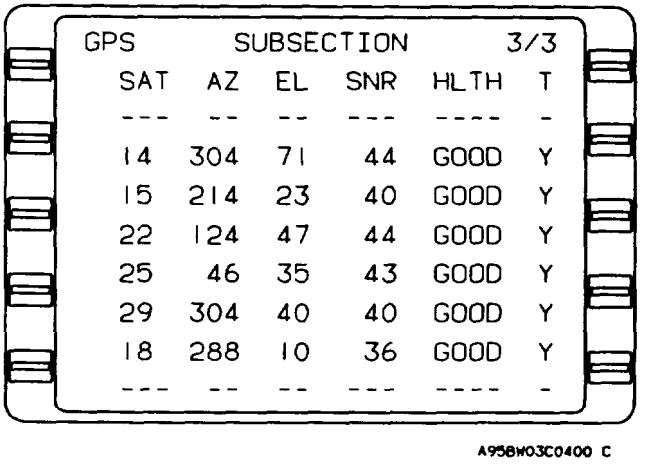

Figure 3-36. GPS Subsection 3/3 Page

NOTE

In a programmed approach, the altitude displayed with the **MAP** (missed approach point) waypoint is computed through the **MAP** waypoint to a point 50 feet above the runway threshold. **MDA** (minimum descent altitude) may be reached prior to the **MAP** waypoint. **MDA** must be observed if the runway is not in sight.

(1) VNAV 1/3 (path) page (fig. 3-36).

(a) VNAV mode (first line of display below title). The **VNAV** mode is the mode required to fly to the **TO** waypoint and is displayed in the left field. The aircraft's current barometric altitude in feet is displayed in the right field. The **VNAV** mode line can display the following:

1 INVALID. **INVALID** displayed in the **VNAV** mode line indicates that the **VNAV** function is invalid. In order to be valid, the following conditions must be met:

Air data (barometric altitude and altitude rate) must be valid.

Must have a valid lateral **TO** waypoint.

Must have a valid vertical **TO** waypoint.

No **SKTK** (selected crosstrack) may be programmed.

Cross track must be less than 12.5 nautical miles.

2 INACTIVE. **INACTIVE** displayed in the **VNAV** mode line indicates that the **VNAV** function is not activated.

NOTE

A crosstrack **(XTK)** of more than 12.5 nautical miles will cause **VNAV** mode to be inactive.

When **VNAV** mode is inactive all external **VNAV** outputs are disabled, including **VERT DEV, EFIS** altitude constraints at waypoints, and **VNAV WPT ALERT** annunciation.

3 CLIMB. When **CLIMB** is displayed on this line, the altitude that must be gained to reach cruise altitude or to the next altitude restriction is shown in the right field.

4 CRUISE. When **CRUISE** is displayed on this line, the altitude which must be maintained while enroute to the top of descent **(#TOD)** point will be shown in the right field.

5 PATH DESCENT. **PATH DESCENT** displayed on this line indicates a descent via a programmed flight path angle. Vertical deviation **(VERT DEV)** will be enabled on the glideslope needle on EHSI.

6 DESCENT. **DESCENT** displayed on this line indicates non-path or air mass descent to altitude restriction.

7 LEVEL. **LEVEL** displayed on this line indicates that the aircraft should fly level to the next altitude constraint.

(b) TO waypoint line (second line). This line displays the vertical **TO** waypoint with the constraint altitude and applicable waypoint offset, where **FL** = flight level, **A** = at or above, **B** = at or below, **G** = glide path, and a blank space = at constraint altitude.

1 #TOC. **#TOC** displayed on this line will have the top of climb target cruise altitude displayed in the right field. The top of climb will become the vertical **TO** waypoint once the aircraft has passed the final climb restriction waypoint and is still climbing.

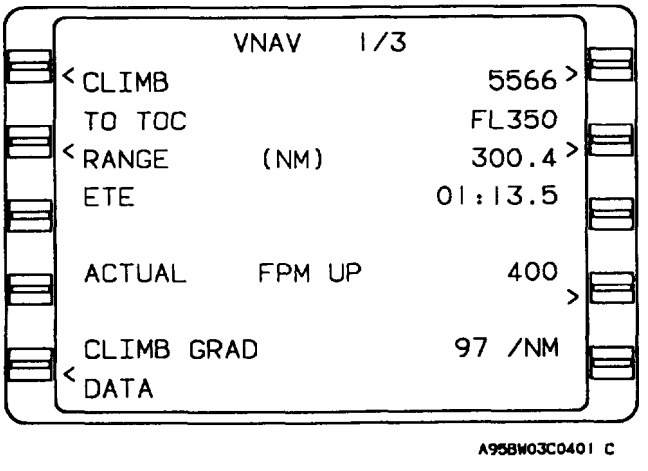

Figure 3-37. VNAV 1/3 Page

2 #TOD. **#TOD** displayed on this line will have the top of descent target cruise altitude displayed in the right field. The top of descent altitude is the point at which the aircraft should begin to descend in order to reach the descent reference waypoint at the required altitude.

NOTE

If no descent reference waypoint with crossing altitude is programmed, the system will use the arrival airport and elevation to fix the **TOD** as long as an airport is the last waypoint on the active flight plan.

(c) EST CROSSING. The estimated crossing altitude **(EST CROSSING)** is the altitude at which the aircraft is estimated to be when it crosses the **TO** waypoint based on its current groundspeed and vertical speed. This field will display **RANGE (NM)** in miles and tenths of a mile when the vertical **TO** waypoint is a **#TOD** or **#TOC** profile point.

(d) ETE. The estimated time enroute **(ETE)** from the aircraft's present position to the vertical TO waypoint, **#TOC,** or **#TOD** is displayed in this field in hours, minutes, and tenths of a minute,

(e) REQUIRED FPM. **REQUIRED FPM** (required feet per minute) is the vertical speed required to satisfy the altitude constraint. **UP** indicates a positive vertical speed and **DN** indicates a negative vertical speed. This field will display **@#TOD FPM DN** when the vertical **TO** waypoint is the top of descent and indicate the descent target vertical speed.

(f) ACTUAL FPM. This line displays the actual vertical speed in feet per minute. **UP** indicates a positive vertical speed and **DN** indicates a negative vertical speed.

(g) VERT DEV. Vertical deviation of the aircraft's flight path from the computed correct descent path in feet. **HIGH** indicates that aircraft is above path. **LOW** indicates that aircraft is below path. **CLIMB GRAD xxx/NM** (climb gradient xxx per nautical mile) is displayed during **CLIMB** mode to indicate current aircraft climb performance in feet per nautical mile.

NOTE

VERT DEV data field will display dashes if the ETE to descent path intercept is greater than one minute. This line will be blank if no flight path angle **(FPA)** is programmed at the descent reference waypoint. In this case **#TOD** will be determined using the default flight path angle **(FPA)** from the **VNAV DATA** page.

(h) DATA. Placing the cursor over the DATA field and depressing enter will cause the **VNAV DATA** page to be displayed.

(2) . VNAV 2/3 (flight plan) page (fig. 3-37).

(a) VNAV mode (first line of display below title). This line displays the same information as on **VNAV 1/3** page.

(b) Waypoints. Lateral and vertical waypoints are listed on this page in order of occurrence with respect to the vertical profile, with constraint altitude and applicable waypoint offset. One of the following system generated **VNAV** profile pointmay also appear:

1 #TOC. Indicates top of climb target cruise altitude.

2 #TOD. Indicates top of descent target cruise altitude.

3 #PRESL. Indicates the estimated position where the aircraft will arrive at the altitude shown on the altitude preselector.

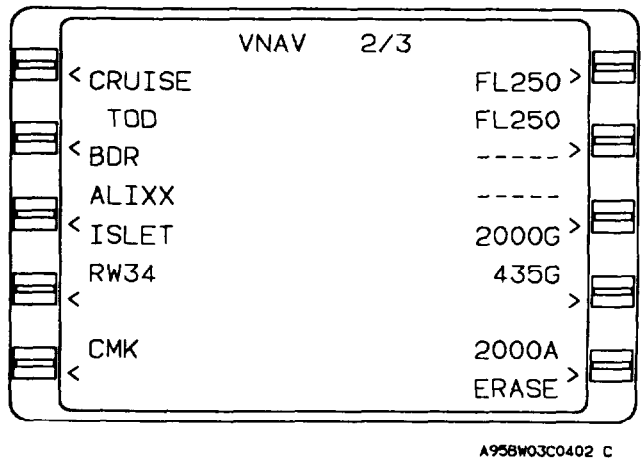

Figure 3-38. VNAV 2/3 Page

(c) ++++++.Separates the missed approach procedure from the rest of the approach.

(d) Waypoint identifiers. May consist of from one to six alphanumeric characters. If more identifiers are present than can be listed on this page, **VNAV 3/3** (fig. 3-38) will list the remainder.

NOTE

Waypoints cannot be added to the active flight plan via **VNAV 2/3.** Enter new waypoint on **ACTIVE FLIGHT PLAN** page.

(e) ERASE. Used to erase all altitude constraints, except the altitude constraint at the current lateral **TO** waypoint.

h. VNAV DATA 1/1 (page 1 of 1) (fig. 3-39).

NOTE

This page is accessed by using the line select key to place the cursor over the **DATA** prompt on one of the **VNAV** pages and depressing the ENTER key.

(1) CRUISE ALT. This line displays the manually entered cruise altitude in feet or flight level **(FL).** Any altitude which is greater than the transition level is converted to and displayed as flight level (rounded off to the nearest hundred feet). An altitude less than 1000 feet must be entered with a preceding zero.

NOTE

In a climb, when the aircraft is within 200 feet of the preselected altitude, the **CRUISE ALT** changes to the same value as the **PRESEL ALT.**

The field also changes to dashes during a descent when the aircraft is 200 feet lower than the **CRUISE ALT** and the preselected altitude is set to a lower value. Then, when the aircraft is within 200 feet of the **PRESEL ALT,** the **CRUISE ALT** changes again to the same value as the **PRESEL ALT.**

(2) TRANS LEVEL. The transition level **(TRANS LEVEL)** field is used to enter the altitude at which the system will convert altitudes to flight level. The field defaults to FL 180 if the pilot does not enter a value.

(3) DEFAULT FPA. This field displays the manually entered descent default flight path angle **(DEFAULT FPA)** in degrees and tenths of a degree from 0.1 to 6.0 degrees.

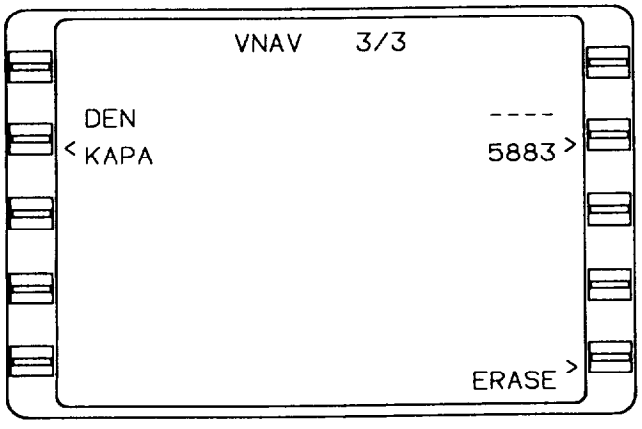

Figure 3-39. VNAV 3/3 Page

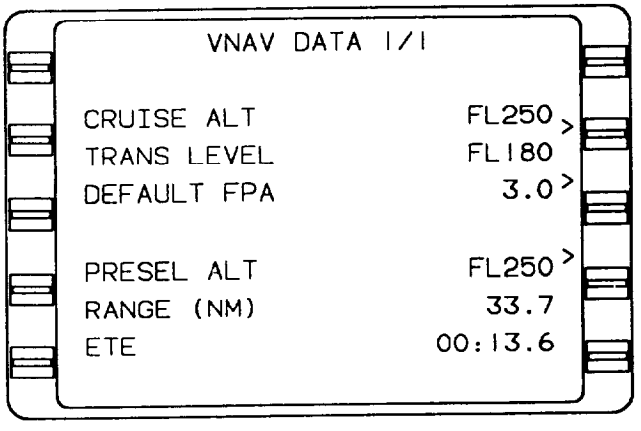

Figure 3-40. VNAV DATA 1/1 Page

NOTE

Enter whole numbers only. The decimal point is entered by the system.

(4) PRESEL ALT. This field displays preselected altitude **(PRESEL ALT)** inputs from the system in feet or flight level,

(5) RANGE (NM). This field displays range to preselected altitude in nautical miles and tenths of a nautical mile.

(6) ETE. This field displays the estimated time enroute **(ETE)** to the preselected altitude in hours, minutes, and tenths of a minute.

i. VNAV WAYPOINT 1/1 (page 1 of 1) (fig. 3-40).

(1) WAYPOINT. This field displays the **VNAV** waypoint identifier which may consist of from one to six alphanumeric characters.

(2) ALT. This field displays the constraint altitude which prefills from the database or can be manually entered. Any altitude entered which is greater than the transition level (from the **VNAV DATA** page) is converted to and displayed as flight level (rounded off to the nearest hundred feet). An altitude less than 1000 feet must be entered with a preceding zero. Altitudes below sea level are limited to -1000 feet. The following may appear in the altitude field:

FL = flight level

A = at or above

B = below

Blank space = at

NOTE

If the destination airport or runway is manually entered, or if the airport/runway is loaded from the database, the airport elevation will be displayed in the altitude field. If the flight plan is loaded through AFIS, the airport elevation will not be available.

(3) EST CROSSING. The estimated crossing altitude **(EST CROSSING)** is the altitude at which the aircraft is estimated to be when it crosses the **TO** waypoint based on its current groundspeed and vertical speed (displayed for the active vertical waypoint).

(4) PLAN CROSSING. **PLAN CROSSING** is system determined crossing based on programmed constraints and flight path angles for descent. Displayed for other than active vertical waypoint.

(5) OFFSET. **OFFSET** displays pilot value in nautical miles **(-99 to +99** range) where a positive entry (+) indicates an offset beyond the waypoint and a negative (-) entry is prior to the waypoint,

NOTE

Pilot must enter the leading (+) sign for the offset to be beyond the fix, but a (-) prefills as a default to cross prior to the fix.

(6) REQ FPM. Required feet per minute **(REQ FPM)** displays the required vertical speed in feet per minute that the aircraft must maintain to reach the vertical waypoint. **UP** indicates a positive vertical speed and **DN** indicates a negative vertical speed is required.

NOTE

If **PLAN CROSSING** is displayed, then the **REQ FPM** is the planned vertical speed for the waypoint.

(7) FPA. Plight path angle **(FPA)** displays the flight path angle for path descent to waypoint in degrees

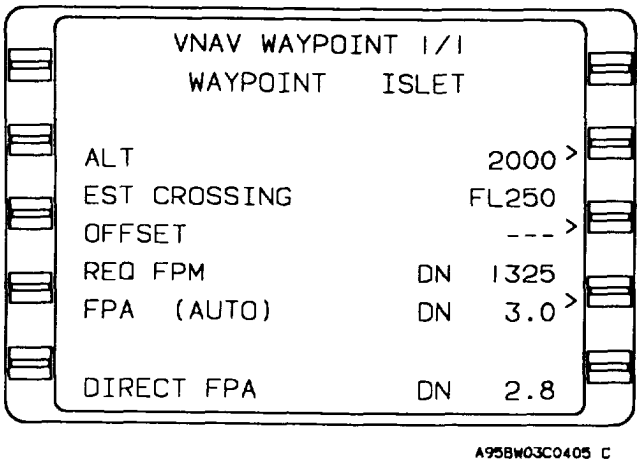

Figure 3-41. VMAV Waypoint 1/1 Page

and hundredths of a degree with a valid range of 0.1 to 6.0. The following may appear in parentheses:

(a) DB. Displays flight path angle **(FPA)** from database **(DB).**

(b) MAN. Displays manually entered flight path angle **(FPA).**

(c) DIR. Indicates that a direct **(DIR)** flight path angle has been programmed.

(d) AUTO. Automatic **(AUTO)** indicates a system computed flight path angle **(FPA).**

(e) DEF. Indicates that flight path angle is a default **(DEF)** from the **VNAV DATA** page.

NOTE

Direct **(DIR),** automatic **(AUTO),** and default **(DEF)** can be accessed using the **BACK** key.

(8) DIRECT FPA. Displays the direct flight path angle **(DIRECT FPA)** from the current aircraft altitude to the vertical waypoint in degrees and tenths of a degree (valid range 0.0 to 90.0). **DN** indicates a negative **FPA** and **UP** indicates a positive **FPA.**

j. Planning pages (PLAN key).

(1) PLAN 1/5 (page 1 of 5), FUEL STATUS (fig. 3-41).

(a) FUEL STATUS LB. This display indicates that fuel data is being computed in pounds. This unit can be manually changed to kilograms **(KG),** if desired, by using the **BACK** key.

(b) REMAINING. This display shows the total fuel remaining on board in pounds or kilograms. This quantity must be initially entered or verified by the pilot and may require periodic verification or update.

(c) RESERVE. This display shows the desired reserve in pounds or kilograms. This quantity may require periodic verification or update.

(d) FLOW. This display shows the current fuel flow in pounds or kilograms. Fuel flow data is input automatically from the fuel flow transmitters. Manual **(MAN)** indicates that fuel flow data has been manually entered by the pilot and that the entry must be manually verified and periodically updated.

(e) LAST INPUT. This display shows the time in hours and minutes since the above three quantities were verified. This field appears if fuel flow is input manually.

NOTE

This field displays **VERIFY INPUTS** at system turn-on since **REMAINING** and **RESERVE** are stored in non-volatile memory during system shut-down.

(f) HOURS. This field displays the hours and minutes of fuel remaining until the reserve fuel quantity is reached.

(g) RANGE. This field displays the nautical mile range available until the reserve fuel quantity is reached.

(h) NM/LB. This field displays the number of nautical miles flown for each pound or kilogram of fuel consumed.

(2) PLAN 2/5 (page 2 of 5), TRIP PLAN (fig. 3-42).

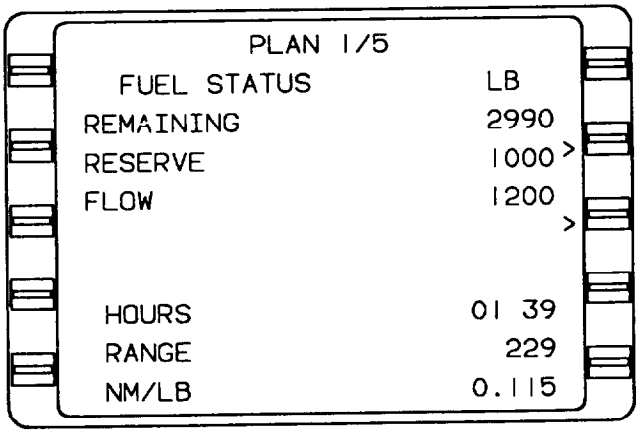

A958W03C0416 C

Figure 3-42. Plan 1/5 Page (Fuel Status)

(a) TRIP PLAN. This field displays the selected flight plan by an **A** for active flight plan or a number (1 to 56) for a stored flight plan.

(b) FR. The from **(FR)** waypoint identifier is followed on the same line by the first waypoint (origin) on the selected flight plan. The from waypoint may be replaced by direct.

(c) TO. The **TO** waypoint identifier is followed on the same line by the last waypoint (destination) on the selected flight plan.

(d) GS. Groundspeed **(GS)** in knots is input automatically when the groundspeed is valid or can be inserted manually which is indicated by **(MAN).** Calculated **(CALC)** is displayed if a manual **ETA** is entered.

(e) DTK. Desired track **(DTK)** is the great circle course between the from **(FR)** and **TO** waypoints based on the groundspeed **(GS).**

(f) DIS. Distance **(DIS)** in nautical miles and tenths of a nautical mile between the from **(FR)** and **TO** waypoints based on the groundspeed **(GS).**

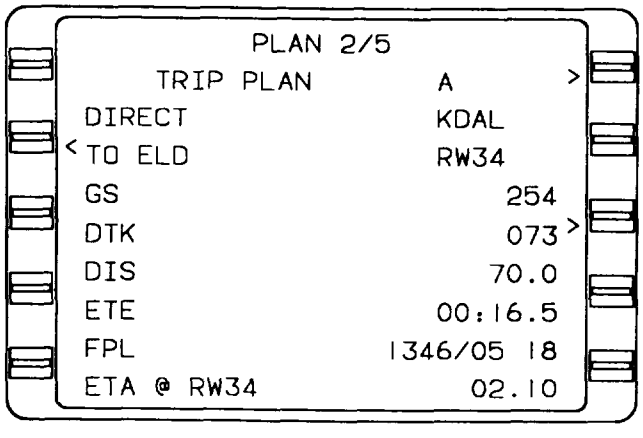

A958W03C0417 C

Figure 3-43. Plan 2/5 Page (Trip Plan)

(g) ETE. This display shows the estimated time enroute **(ETE)** in hours, minutes, and tenths of a minute between the aircraft's present position and the **TO** waypoint or the from **(FR)** and **TO** waypoints based on the groundspeed **(GS).**

(h) FPL. This display shows the total distance and time remaining from the from **(FR)** waypoint or the present position, when a direct to leg is displayed, to the last waypoint on the selected flight plan via the flight planned route. Distance is displayed in miles and time is in hours and minutes.

(i) ETA@. This display shows the estimated time of arrival **(ETA)** at the destination, or last waypoint on the active flight plan that provides a "fence". Appears when a **DIRECT TO** leg is displayed.

NOTE

The estimated time of arrival **(ETA)** field will flash if the **ETA** is behind the current time.

(j) RAIM@. Receiver autonomy integrity monitoring **(RAIM)** at the specified point will either be available **(AVAIL)** or not available **(NOT AVAIL)** at the **ETA.** If a manual ground speed has been entered, **STANDBY** will be displayed. If **GPS** is not functioning, **NO NAV** will be displayed.

(3) PLAN 3/5 (page 3 of 5), FUEL PLAN (fig. 3-43).

(a) FUEL PLAN. An **A** in this display indicates that active flight plan information is being displayed. A numeric entry in this field provides fuel planning for stored flight plans.

(b) FR. This line displays the from waypoint identifier followed on the same line by the first waypoint (origin) on the selected flight plan. The from **(FR)** waypoint may be replaced by **DIRECT.**

(c) TO. This line displays the **TO** waypoint identifier followed on the same line by the last waypoint (destination) on the selected flight plan.

(d) GS. This line displays the groundspeed **(GS)** in knots which is input automatically when the groundspeed is valid or can be input manually, which is indicated by **(MAN).**

(e) FLOW. This line displays fuel flow in pounds or kilograms per hour which is input automatically from fuel flow transmitters or can be. inserted manually, which is indicated by **(MAN).**

(f) LEG FUEL. This line displays the quantity of fuel which will be used on the current from/to leg or from the aircraft's present position to the current **TO** waypoint, based on groundspeed, fuel flow, and distance.

(g) FPL FUEL. This line displays the total quantity of fuel projected to be consumed in the total flight plan. This calculated value is based on the current fuel flow and groundspeed.

(h) REM@. This line only appears if a **DIRECT TO** leg is displayed. It indicates the amount of fuel remaining overhead at destination, or the last waypoint on the flight that precedes a "fence", under current conditions. This value is based on the **REMAINING** fuel quantity from the **FUEL STATUS** page minus the total **FPL** fuel.

(4) PLAN 4/5 (page 4 of 5), DATE/GMT (fig. 3-44).

(a) DATE. This line displays the current Greenwich date (day, month, and year). When the date is entered, the numerals 01 through 12 are entered for the months. The computer changes this month designation to its alpha equivalent.

(b) GMT. This line displays the time of day in Greenwich Mean Time in hours and minutes.

NOTE

If necessary, both **DATE** and **GMT** can be corrected on this page.

GMT may be updated to **GPS** time by placing the cursor over the **GMT** data field and depressing the **BACK** key. If **GPS** time is available, **GPS?** appears under the cursor. Depress **ENTER** key to update **GMT** to **GPS** time.

(c) TAKEOFF. The **TAKEOFF** field displays the Greenwich Mean Time **(GMT)** at weight off wheels time.

(d) LAND. The **LAND** field displays the Greenwich Mean Time **(GMT)** at weight on wheels time. This field will not appear until weight on wheels occurs.

(e) FLIGHT TIME. This field displays elapsed flight time in hours and minutes.

(5) PLAN 5/5 (page 5 of 5), ***AIRCRAFT WEIGHT*** (fig. 3-45).

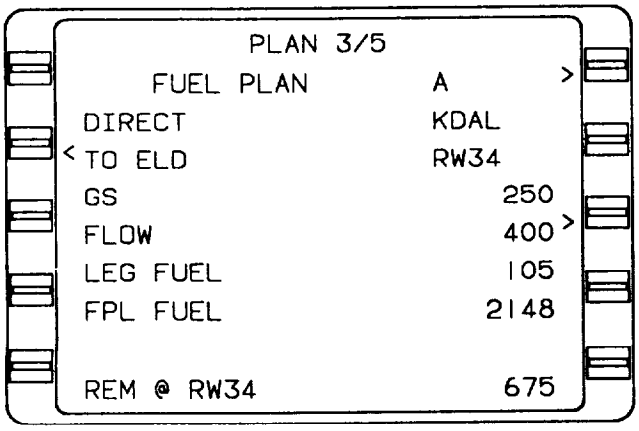

A958W03C0418 C

Figure 3-44. Plan 3/5 Page (Fuel Plan)

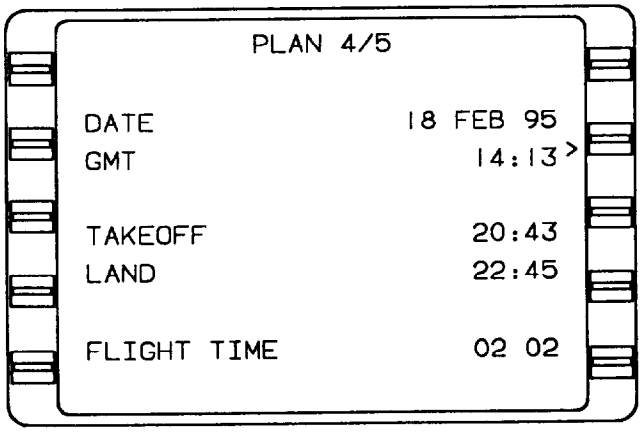

A958W03C0419 C

Figure 3-45. Plan 4/5 Page (DatelGMT)

(a) BASIC OP WT. The basic operating weight **(BASIC OP WT)** field displays the combined weight in pounds or kilograms of the empty aircraft, crew members, and crew baggage.

(b) PAYLOAD. The **PAYLOAD** field displays the weight in pounds or kilograms of passengers, cargo, and baggage.

(c) FUEL ON BOARD. The **FUEL ON BOARD** field displays the weight in pounds or kilograms of fuel on board.

(d) VERIFY INPUTS. Bach of the flashing values must be verified by depressing the **ENTER** key when the cursor is over a field.

NOTE

This field can also display **VERIFY FUEL.**

(e) FUEL USED. Displays the weight in pounds or kilograms of fuel consumed.

NOTE

This field appears as dashes at power up and increments as auto fuel flow data is available.

(6) GROSS WT. This field displays the total weight in pounds or kilograms of basic operating weight, payload, and fuel on board.

k. Heading Section.

(1) HEADING VECTOR 1/1 (page 1 of 1) (fig. 3-46).

(a) HEADING. This line displays the commanded heading in degrees. This field may also prefill with current aircraft heading if heading mode is not active. The pilot may manually enter heading preceded by a turn direction **(R** or **L).** A **T** indicates that the system is operating in the true heading mode.

(b) HEADING MODE. The **BACK** key may be used to select one of the following:

1 HDG SELECT. Heading select **(HDG SELECT)** displayed on this line indicates that heading mode is on, but system has not intercepted.

2 INTERCEPT. **INTERCEPT** displayed on this line indicates that heading mode is on and the system will intercept the next leg.

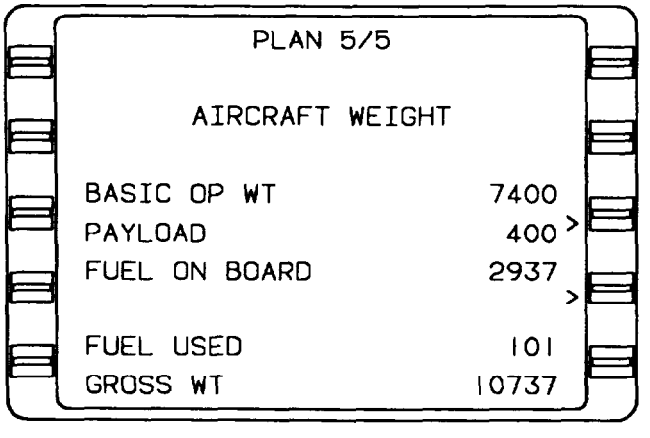

A958W03C0420 C

Figure 3-46. Plan 5/5 Page (Aircraft Weight)

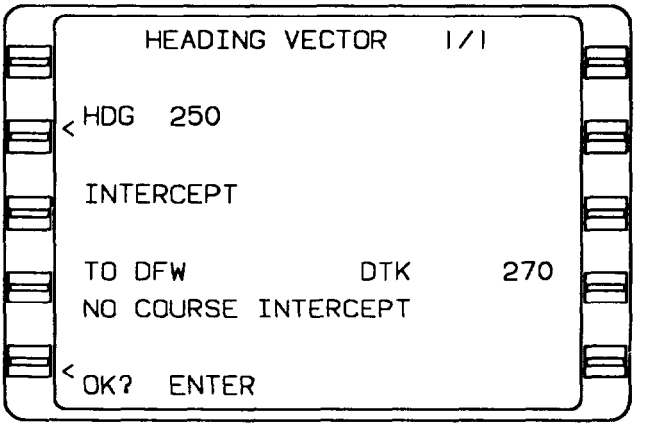

A958W03C0421 C

Figure 3-47. Heading Vector 1/1 Page

3 CANCEL. **CANCEL** displayed on this line indicates that heading mode is off.

(c) TO. This line prefills with current **TO** waypoint identifier or is eaterable (from one to six alphanumeric characters).

NOTE

With the cursor over the **TO** waypoint field, using the **BACK** key will step through the active flight plan waypoints.

(d) DTK. This field displays desired track **(DTK)** in degrees. Desired track is the great circle route between the from and **TO** waypoints.

NOTE

If the default desired track is changed, a pseudo VORTAC leg will be programmed.

(e) INTERCEPT MESSAGES. If the intercept mode is programmed, one of the following messages may appear.

1 INTERCEPT BEYOND FIX. The intercept message **INTERCEPT BEYOND FIX** indicates that the commanded heading will not cause the aircraft to intercept the programmed course on the **TO** side of the fix.

2 NO COURSE INTERCEPT. The intercept message **NO COURSE INTERCEPT** indicates that the commanded heading will cause the aircraft to diverge from the programmed course (crosstrack deviation will increase).

3 No message. No message indicates either that there is no **TO** waypoint, an intercept is not programmed, or that the commanded heading will not intercept the programmed course prior to the fix.

(f) OK? ENTER. The **OK? ENTER** prompt at the bottom of the screen indicates that the procedure for accepting the entered **TO** waypoint or **DTK** is to depress the **ENTER** key.

I. Tuning Section (Tune Key).

(1) TUNE 1/4 (page 1 of 4), COMM (fig. 3-47).

(a) COMM 1 or COMM 2. The information displayed on the lines below this heading applies to **COMM 1** or **COMM 2.**

(b) ACTIVE. This field displays the frequency currently tuned and displayed on the respective control head. This display will appear briefly but will turn to dashes because the system interface does not provide a return frequency input. **(MAN)** in this field indicates that the frequency was manually entered via the control unit.

(c) PRESET. The pilot can enter and store a frequency in this field using the flight management system keyboard.

(d) TRANSFER?. This display indicates that the displayed preset frequency can be transferred to **ACTIVE** when the **ENTER** key is depressed. The control unit will reflect this change.

(2) TUNE 2/4 (page 2 of 4), COMM (fig. 3-47). This page displays the same information as the first page for additional **COMM** radios.

(3) TUNE 3/4 (page 3 of 4), NAV (fig. 3-48).

(a) NAV 1 or NAV 2. The station identifier to which the respective **NAV** receiver is tuned. **(KEY)** will be displayed when the frequency or identifier of the station has been entered using the keyboard.

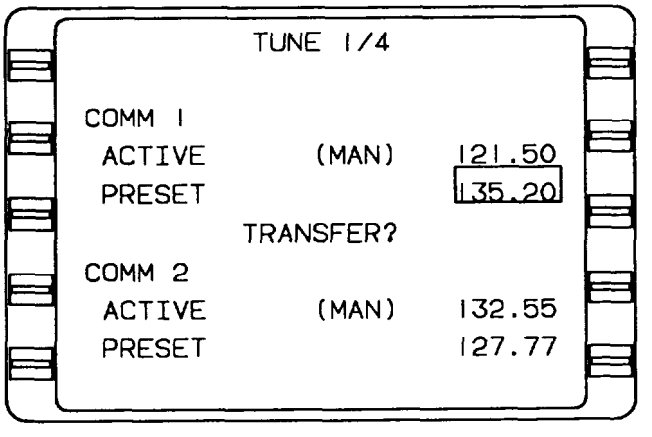

A958W03C0422 C

Figure 3-48, Tune 1/4 Page (COMM)

(b) FREQ. This line displays the frequency currently tuned and displayed on the respective control unit. **(MAN)** in this field indicates that the frequency was manually entered via the control head. This field may also show **KEY** if the identifier is unknown.

(c) RANGE. This field displays the range in nautical miles and tenths of a nautical mile from the aircraft's present position to the DME station. The station identifier can also appear in this field if the control unit is placed in the **DME HOLD** mode. **NO ID** will be displayed if the identifier of the held station is unknown.

(d) BRG. This field displays the bearing in whole degrees.

(4) TUNE 4/4 (page 4 of 4), XPDR/ADF (fig. 3-49).

(a) XPDR. This field displays the transponder **(XPDR)** reply code. The transponder reply code will appear briefly but will turn to dashes because the system interface does not provide a return frequency input. **(MAN)** indicates the entry was made through the control unit.

(b) ADF. This field displays the automatic direction finder **(ADF)** frequency. The **ADF** frequency will appear briefly but will turn to dashes because the system interface does not provide a return frequency input. **(MAN)** indicates the entry was made through the control unit.

NOTE

If either the **XPDR** or **ADF** frequencies are tuned via the keyboard, **(MAN)** will not appear.

m. Holding Pattern Section (HOLD Key).

(1) HOLDING PATTERN (page 1 of 1) (fig. 3-50).

This page is accessed by depressing the **HOLD** key when the cursor is positioned over a waypoint identifier.

(a) AT.. THis line displays the holding fix and country name or airport ident.

(b) Holding pattern entry and status message. If the entry course to the holding fix can be determined, the entry procedure will be annunciated after all the holding pattern parameters are entered.

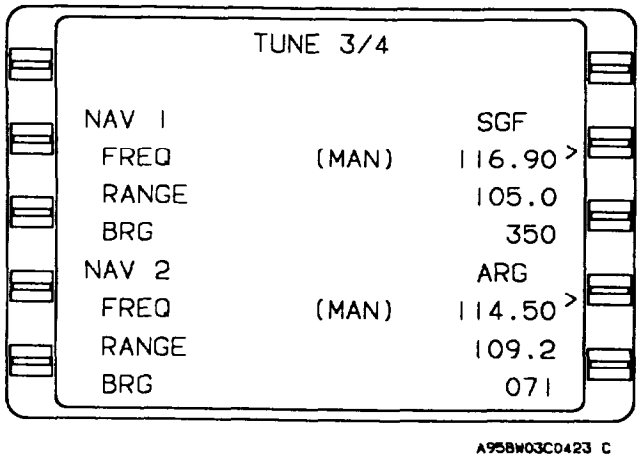

Figure 3-49. Tune 3/4 Page (NAV)

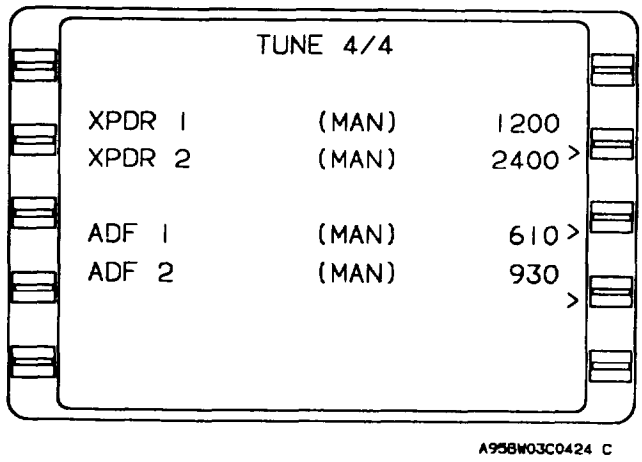

Figure 3-50. Tune 4/4 Page (XPDR/ADF)

1 DIRECT ENTRY. Indicates that the system will use a direct entry to the holding pattern.

2 TEARDROP ENTRY. Indicates that the system will use a teardrop entry to the holding pattern.

3 PARALLEL ENTRY. Indicates that the system will use a parallel entry to the holding pattern.

4 HOLDING. Indicates that the system has entered the holding pattern.

5 EXIT HOLD. Indicates that the system will exit the holding pattern the next time over the holding fix.

(c) INBOUND CRS. This field displays the inbound course **(INBOUND CRS)** in degrees. This field can be indexed to true north or magnetic north depending upon the display mode selected by the **TRUE/ MAG** switch input. A T appears if the system is in the true mode.

(d) MAX HOLDING TAS. The maximum holding true airspeed field **(MAX HOLDING TAS)** is computed based on configuration module maximum holding indicated airspeed and worst case winds. It represents the maximum true airspeed in the holding pattern that will assure that the aircraft remains in protected airspace.

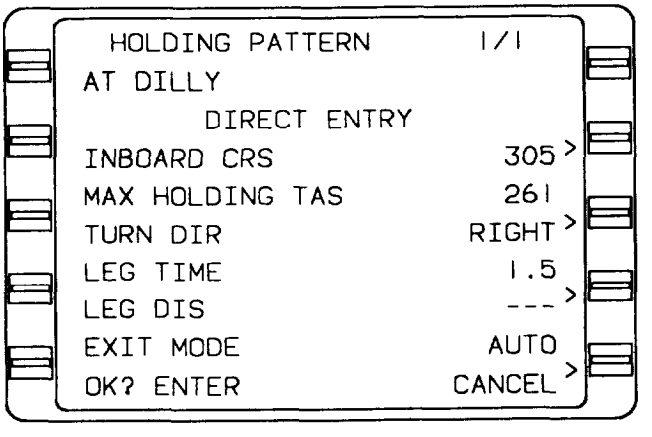

Figure 3-51. Holding Pattern 1/1 Page

(e) TURN DIR. The turn direction **(TURN DIR)** field indicates the direction of turns in the holding pattern. **RIGHT** displayed in this field indicates standard holding pattern turn direction. Non-standard **(LEFT)** turn direction can be entered by using the **BACK** key.

(f) LEG TIME. This field indicates the holding pattern inbound leg time in minutes and tenths of a minute.

NOTE

Leg time defaults to an appropriate value based on altitude and may appear in parentheses if it has been computed from the **LEG DIST.**

(g) LEG DIST. The leg distance **(LEG DIST)** field displays holding pattern inbound leg distance in nautical miles (1.0 to 50.0 nautical miles).

NOTE

When **LEG DIST** is computed by the system based on **LEG TIME,** the field is in parentheses.

(h) EXIT MODE. **MANUAL** (default mode) displayed in this field indicates that the system will remain in the holding pattern indefinitely. The **BACK** key may be used to select **AUTO.** This allows the flight crew to program or execute a procedure turn for course reversal. The system will then execute a holding pattern entry and exit after crossing the fix waypoint.

NOTE

If **MANUAL** is selected an **HP** will be annunciated next to the waypoint on the flight plan, navigation, and direct to pages. If **AUTO** is selected a **PT** will be annunciated next to the waypoint on flight plan, navigation, and direct to pages.

(i) OK? ENTER. When the **OK? ENTER** prompt is displayed at the bottom of the holding pattern page, depressing the **ENTER** key will program a holding pattern for a particular waypoint.

NOTE

The cursor will not appear on this field.

(j) CANCEL. Used to cancel a holding pattern.

(2) POSITION FIX page (fig. 3-51).

The position fix page is accessed by depressing the **HOLD** key while the cursor is off the page.

(a) POS. This field displays the composite (system) position coordinates at the moment the **HOLD** key was depressed in degrees, minutes, and hundredths of a minute.

(b) IDENT. The **IDENT** field displays the alphanumeric designator of the reference point which is used to check or update position.

(c) FIX. This field displays the actual coordinates of the reference in degrees, minutes, and hundredths of a minute.

(d) DIF. This field displays the difference between the composite position and the **FIX** (or other sensor) position in degrees, minutes, and hundredths of a minute.

NOTE

Position coordinates of individual sensors and the difference between those sensor positions and the composite (system) position may be displayed by moving the cursor over the **FIX** field and depressing the **BACK** key.

n. DIRECT TO section (fig. 3-52).

(1) DIRECT 1/2 (page 1 of 2).

The **DIRECT 1/2** page is accessed by depressing the direct to key and presents a listing of all active flight plan waypoints. The cursor may be positioned over any desired identifier (ahead of or behind the aircraft) to proceed **DIRECT.**

(a) TO. When the **DIRECT 1/2** page is accessed, the cursor will be displayed over the current **TO** waypoint on the active flight plan.

(b) HP. **HP** (holding pattern) indicates that a holding pattern is programmed at a particular waypoint.

(c) P. **PT** (procedure turn) indicates that a procedure turn is programmed at a particular waypoint.

(2) DIR CLOSEST ARP 2/2 (page 2 of 2) (fig. 3-53).

The **DIR CLOSEST ARP** (direct to closest airport) page displays up to nine airports in order of their proximity to the aircraft, with the closest airport listed first.

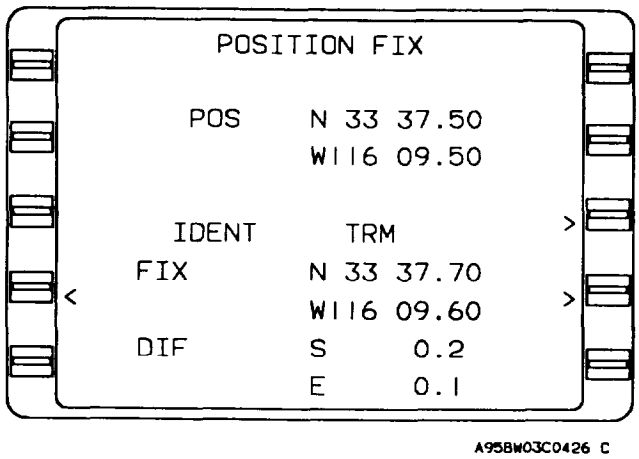

Figure 3-52. Position Fix Page

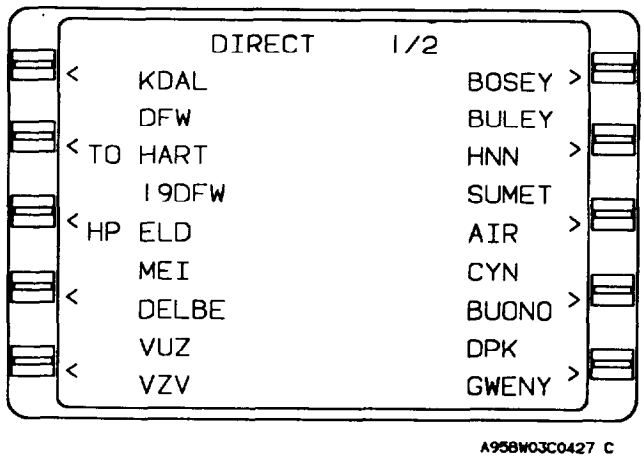

Figure 3-53. Direct To 1/2 Page

NOTE

Airports listed from the database have hard surfaced runways of 4000 feet or longer.

o. Waypoint Pages. Waypoint pages can be accessed from any **FLIGHT PLAN, NAV DIRECT, HOLD, INITIALIZATION, HEADING,** or **TRIP PLAN/FUEL PLAN** pages, There are four categories of waypoints:

Database generated.

Pilot entered (personalized/offset).

Special.

Obsolete.

(1) DATABASE WPT 1/8 (page 1 of 8) (fig. 3-54).

Database generated waypoints are automatically updated when accessed and cannot be modified by the operator. The three basic types of waypoints residing in the data base are navaids, airports, and intersections.

(a) VHF navaids.

1 *WAYPOINT.* This field displays the alphanumeric designator for the navaid.

2 *POS.* This field displays the coordinates of the waypoint position **(POS)** as stored in the database.

3 *FREQ.* This field displays the frequency **(FREQ)** for the station.

4 *VAR.* This field displays the magnetic variation **(VAR)** of the station location.

5 *ELEV.* This field displays the elevation in feet of the station (DME equipped VHF navaids only). A minus sign (-) indicates that the elevation of the station is below sea level.

6 *NDB-ENTER.* To accept the waypoint from the navigation database **(NDB),** depress the **ENTER** key.

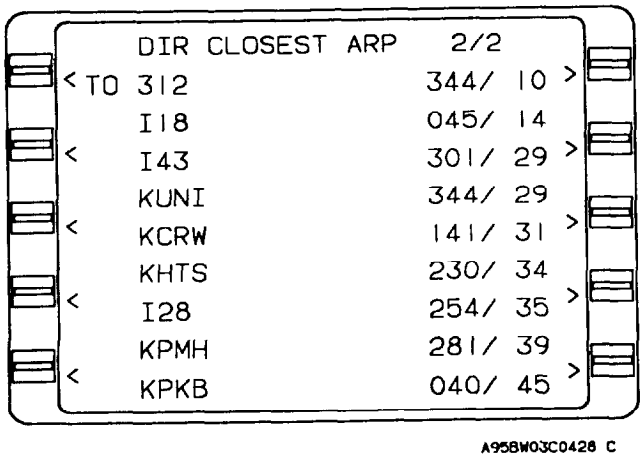

Figure 3-54. Direct To 2/2 Page (Closest Airport)

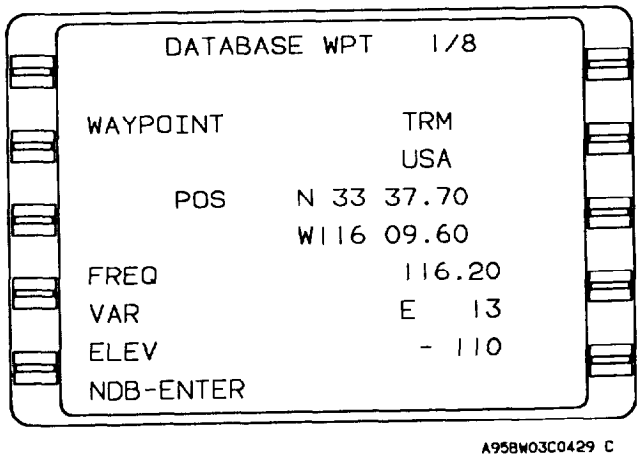

Figure 3-55. Database Waypoint 1/8 Page

NOTE

If the waypoint has a duplicate identifier in the database for another location, the closest waypoint to the aircraft's position will be shown and the country code will be displayed beneath the waypoint identifier.

Depress the **NXT** key to sequence to the next waypoint page with a different country code. The **PRV** key can be used to sequence backward through the waypoint pages. Additional country codes and corresponding **POS** coordinates will be sequentially displayed.

(b) Non-directional beacons (NDB's). NDB's which are stored in the internal database are listed with a 2 or 3 letter identifier. To distinguish these NDB's from VHF navaids, you must add an **NB** suffix to the database identifier.

(c) Airports. International Civil Aviation Organization (ICAO) identifiers are used to access data in the database. Except for a few hundred 3 or 4 character airport identifiers in Alaska, Canada, and the continental United States, all airport identifiers are in the database. In most cases an ICAO country code letter prefix is the first character of the identifier.

To access a four character identifier use the identifier found in navigation charts.

If the airport is shown in the navigation charts as a three letter identifier, add the correct prefix letter.

If the airport is shown in the navigation charts as a three character (letters and numbers) identifier, enter the identifier as printed.

(d) Airport reference points, outer markers, and runway thresholds. Airport reference point **(ARP)** coordinates are always displayed in response to the airport identifier. Outer markers and runway thresholds for which data is stored in the database are also displayed on the airport waypoint page and can be accessed by depressing the **PRV** or **NXT** key or line select keys. The selected outer marker or runway threshold will then be displayed on the page of origin in the waypoint field with the airport identifier immediately below.

(e) Intersections/enroute waypoints. Most waypoint identifiers consist of 5 letters; however, 3, 4, and 5 letter and number combinations exist. To access these waypoints, simply enter the identifier from the navigation charts.

(2) PILOT ENTERED WPT (fig. 3-62).

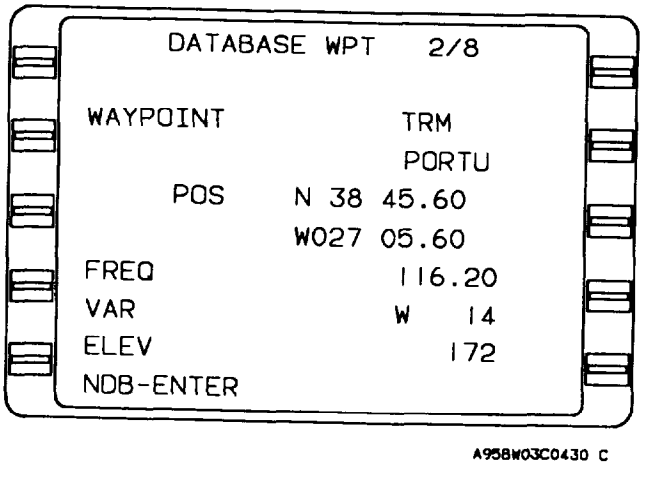

Figure 3-56. Database Waypoint 2/8 Page

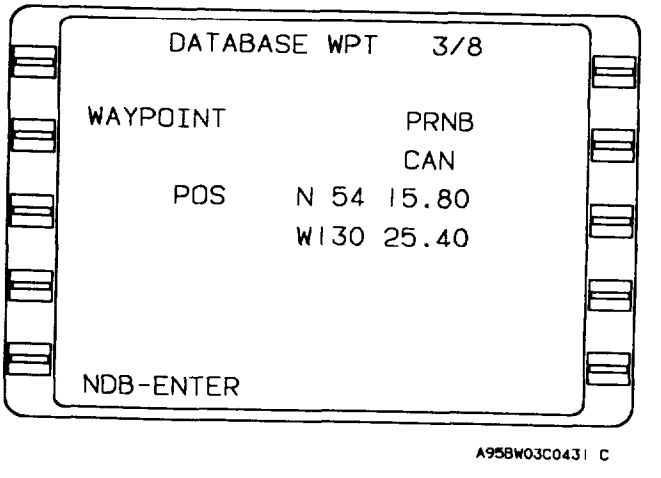

Figure 3-57. Database Waypoint 3/8 Page

The pilot entered waypoint page allows the pilot to enter custom waypoints.

(a) WAYPOINT. The alphanumeric designator selected by the pilot to name custom waypoints. Identifiers can consist of up to six characters, and can be composed of any of the characters on the keyboard except the asterisk **(*)** and pound sign **(#).**

(b) POS. These are blank fields for entering the latitude and longitude of the waypoint. When initially accessed (waypoint not yet in memory) the coordinate fields are both dashed and covered by a double cursor.

(c) WPTS AVAILABLE. The waypoints **(WPTS)** available field displays the number of waypoints available in memory after this waypoint has been defined. Maximum waypoint storage in non-volatile memory is *999.*

(d) OK? ENTER. The procedure for accepting the waypoint if the coordinates are correct is to depress the **ENTER** key.

(3) OFFSET WAYPOINT 1/1 (page 1 of 1) (fig. 3-63).

An offset waypoint is a set of coordinates determined by a selected radial and distance from a previously defined or database waypoint, called a parent waypoint. An **(*)** following the parent waypoint denotes an offset waypoint. More than one offset waypoint is allowed from one parent, using **{*[, {*1[, {*A1[,** etc. as identifying notation.

NOTE

The offset waypoint uses station declination, if available, or it uses the calculated magnetic variation of the parent waypoint. All points defined by a VHF navaid in the national/ international airspace system are based on the VHF navaid station declination. Since the magnetic variation and station declination may not be the same at a given navaid, the calculated position and the defined position may differ.

(a) WAYPOINT. The **WAYPOINT** field displays the parent waypoint identifier followed by an ***.** When an offset waypoint identifier is entered and the waypoint has not been previously defined, the **RAD, DIS,** and **POS** fields are all dashed. When the waypoint has been previously defined, the coordinates will be displayed and the radial and distance values will be computed based on the location of the parent waypoint. If the parent waypoint

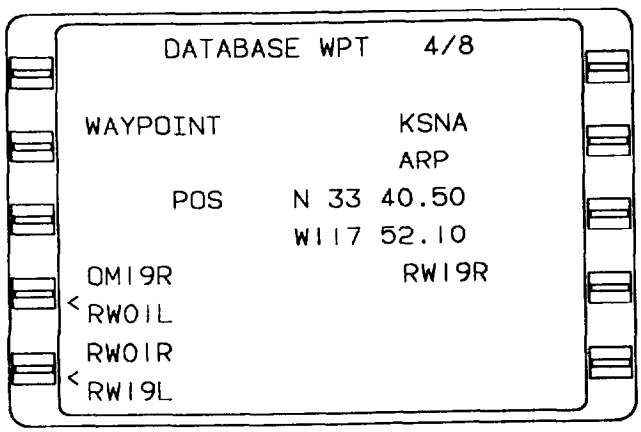

Figure 3-58. Database Waypoint 4/8 Page

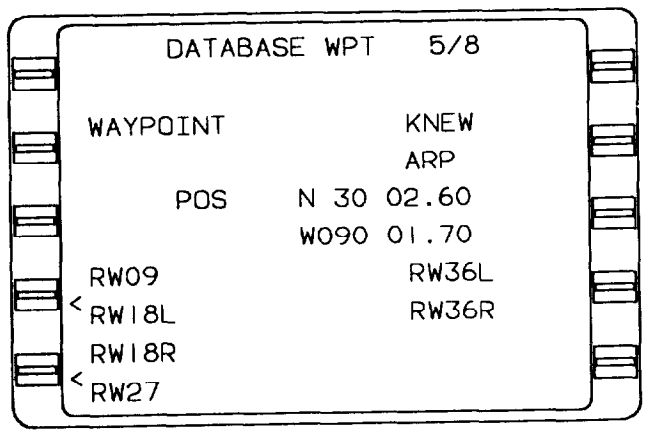

Figure 3-59. Database Waypoint 5/8 Page

is an airport continuation record, the airport identifier will be displayed immediately below the offset waypoint identifier. If a parent waypoint has a duplicate identifier in the database, the country code will be displayed immediately below the offset waypoint identifier.

(b) RAD. The radial **(RAD)** field displays the radial from the parent waypoint along which the offset is established. This entry will be annunciated with a **T** if a true heading input is received or if the parent waypoint is above N *70* degrees or S *60* degrees latitude.

(c) DIS. This field displays the distance in nautical miles from the parent waypoint to the offset waypoint (399.9 nautical miles maximum).

(d) POS. This field displays the computed offset waypoint coordinates based on the pilot entered radial and distance from the parent waypoint.

(e) OK? ENTER. The **OK? ENTER** prompt indicates that the procedure for accepting the waypoint if the coordinates are correct is to depress the **ENTER** key.

(4) SPECIAL WPT (fig. 3-64).

The special waypoints **#1** and **#OFF** are defined automatically by the system based on aircraft position.

(a) #1. Special waypoint **#1** is the position at which the **POSITION FIX** page was last accessed. Special waypoint **#1** can only be defined by the system.

(b) Power off waypoint. The power off waypoint is a set of coordinates retrieved as the last known position when power is lost enroute. This page should be accessed by inserting **#OFF** into the **IDENT** field on the **POSITION FIX** page after power has been restored and initialization enroute has been performed.

1 WAYPOINT #OFF. This is the power off waypoint designator.

2 POS. This field displays the last present position coordinates at loss of power. These coordinates are stored in non-volatile memory.

3 GMT OFF. This field displays the actual **GMT** (Greenwich Mean Time) of power loss.

4 MINUTES OFF. This field displays the total time elapsed during power off.

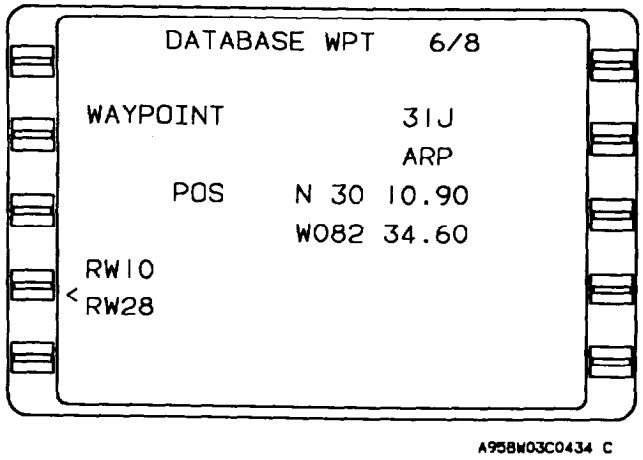

Figure 3-60. Database Waypoint 6/8 Page

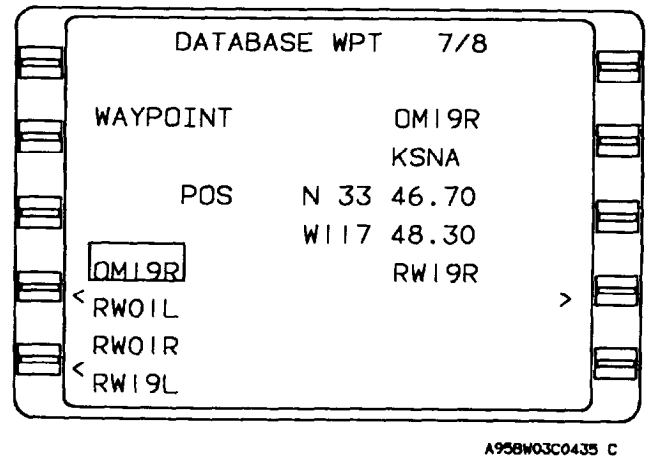

Figure 3-61. Database Waypoint 7/8 Page

5 *LAST TK.* This field displays the last aircraft track **(LAST TK)** at time of power off.

6 *LAST GS.* This field displays the last groundspeed **(LAST GS)** at time of power off.

(5) Obsolete waypoint. Obsolete waypoints are typically created when a multiply defined database waypoint used on a flight plan is no longer found in the database. This may happen when a new database is loaded. An obsolete waypoint can be accessed only by verifying an existing waypoint on a flight plan. It will be lost once its last occurrence on a flight plan is removed.

p. MESSAGES **(MSG key)** (fig. 3-65). System and sensor messages are displayed on separate pages in the message section They are accessed by depressing the **MSG** key. The message section will consist of as many pages as are required to display current messages. The **MSG** key is used to sequence through the system and sensor message pages and to return to the page that was displayed before accessing the message section.

The **NXT, BACK,** and **PRV** keys are used to page forward and backward through the message pages. System messages describe the system's operation with all related aircraft systems. Sensor messages describe the operational status of each navigation sensor.

In most instances, when new messages are added, the message light will flash and a flashing asterisk will appear adjacent to the new message.

q. System Operation.

(1) Power ON/OFF and parallax adjustment.

1. **ON** key - Depress (momentarily). The **SELF TEST** page will be displayed for approximately 30 seconds. During the time that the **SELF TEST** message is displayed, the system is performing internal self tests, These tests verify the inputs and outputs from the control display unit (CDU) and receiver processor unit (RPU).

NOTE

If the system was turned off last by the removal of aircraft power, the system will turn on automatically when aircraft power is applied.

2. **BRT** key - Adjust as required. The system will initially come on full bright. Depress and hold the **BRT** key to dim the display. Release the **BRT** key.

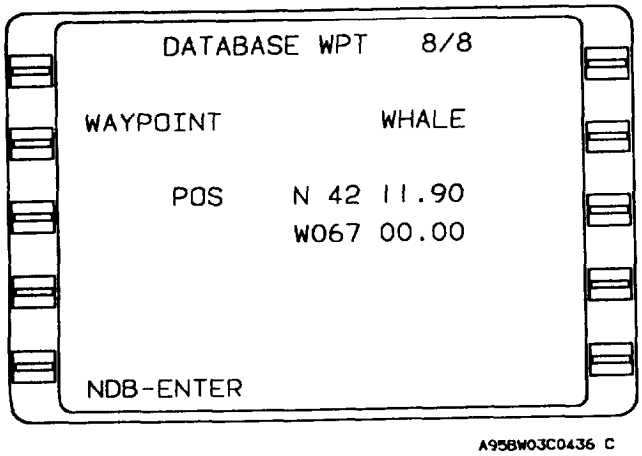

Figure 3-62. Database Waypoint 8/8 Page

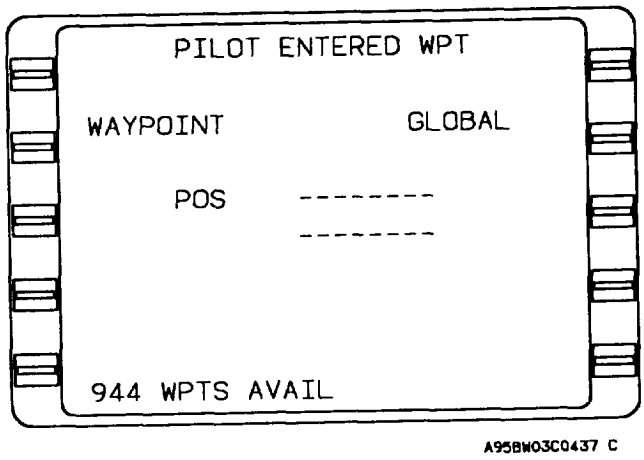

Figure 3-63. Pilot Entered Waypoint Page

Depress and hold again to brighten the display.

NOTE

The display may be changed instantaneously to full bright from any brightness level by momentarily depressing the **ON** key

3. Parallax - If the line select keys do not align with the line select prompts on the **CRT,** adjust as follows:

   a. Depress the **BRT** key (if the screen begins to dim, release the **BRT** key. Depress again and hold while momentarily depressing the **D** key, then the **P** key).

   b. Using the **U** (up) or **D** (down) key, adjust the display to the desired alignment.

   c. Depress any key when alignment is complete.

4. **ON** key - Depress and hold for three seconds to turn system off.

(2) Initialization page. The initialization page gives the pilot access to the required initialization data (date, GMT, and position). Following confirmation or entry of this data, the page disappears and cannot be retrieved unless system power is removed and then restored. GMT and date are available for display in the **PLAN** section and position is available in the **NAV** section.

(a) DATE and GMT.

1. **DATE** - Insert, if required (day/month/year - digits only).

NOTE

DATE and **GMT** are continuously updated while the system is off. When the system is turned on, the **DATE** and **GMT** will appear on the initialization page. If the **DATE** is incorrect, move the cursor to the **DATE** field to update manually.

Enter a leading 0 for months with a numerical value of less than 10.

2. **ENTER** key - Depress to verify display.

3. **GMT** - Insert if required (hours and minutes).

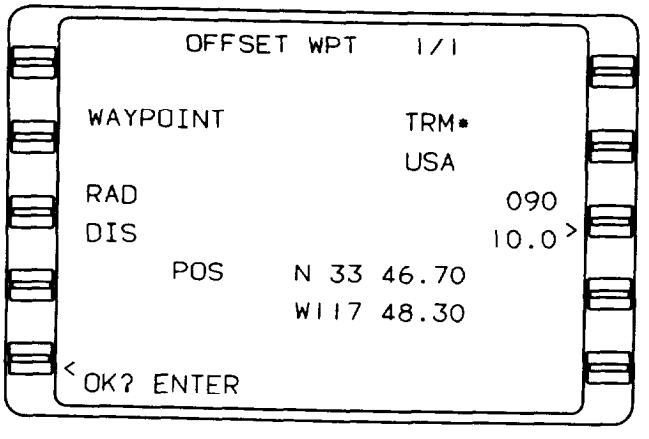

A958W03C0438 C

Figure 3-64. Offset Waypoint 1/1 Page

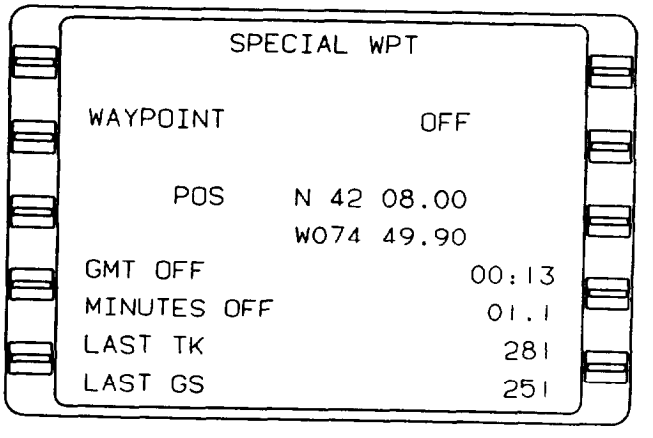

A958W03C0439 C

Figure 3-65. Special Waypoint Page

4. **IDENT** - Verify position. The appropriate airport ICAO identifier or latitude and longitude may be inserted at this point.

NOTE

After a brief delay, this field normally prefills with the identifier of the airport closest to the aircraft's present position at power-up, provided the aircraft's real position and system position were the same at system shutdown.

5. **ENTER** key - Depress to verify display.

6. **MSG** key - Depress to verify database expiration date and to review other system messages. Continue depressing **MSG** key to review **SENSOR MESSAGES** and to return to **INITIALIZATION** page.

(3) Departure position. The departure position should be the runway threshold. The departure position may be entered using either the field identifier or the latitude and longitude in the **POS** field.

(4) Entering departure position using ICAO identifier field.

1. Line select key - Depress to position cursor over desired field (if required).

2. Desired number and letter keys - Depress until desired identifier appears in display.

3. **ENTER** key - Depress.

4. Airport reference point **(ARP)** coordinates - Will be displayed with continuation records listed below.

5. Airport continuation records - TO access, position the cursor over the departure runway identifier. This will automatically result in the display of the departure runway threshold in the waypoint field, the departure airport will replace the **ARP** field, and **POS** coordinates will reflect selected runway threshold.

6. **ENTER** key - Depress.

IF **AFIS** is not installed, the system will automatically advance to the **FLIGHT PLAN LIST** page. The cursor will be positioned over the first flight plan number that originates with the same airport or runway identifier as entered on the **INITIALIZATION** page. If **AFIS** is

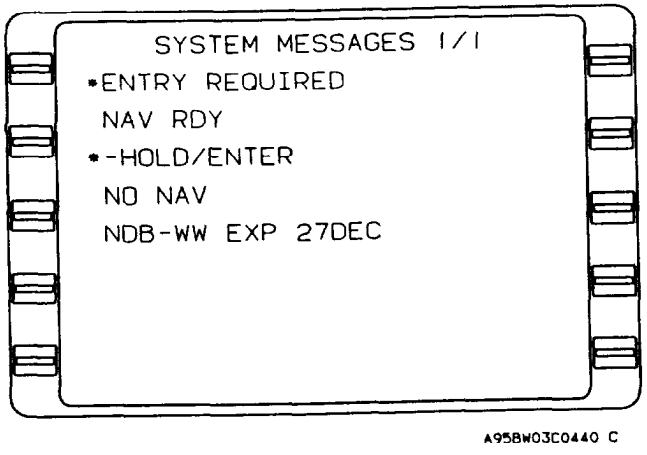

Figure 3-66. System Messages 1/1 Page

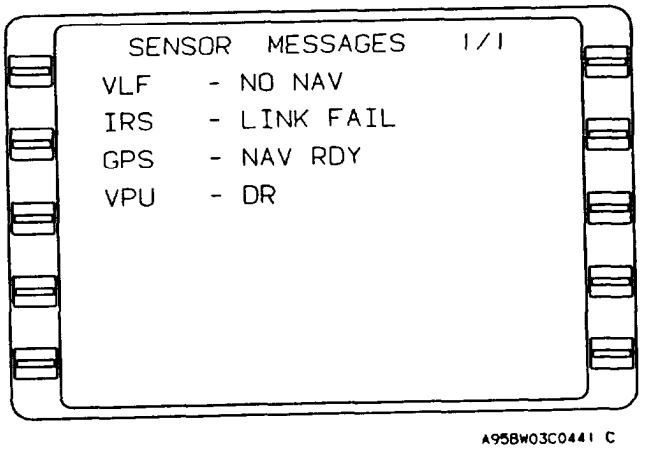

Figure 3-67. Sensor Messages Page

installed, the system will advance to the **AFIS FPL** page where a flight plan may be selected from the disc which has been inserted into the **AFIS DTU.**

(5) Entering departure position using POS. field.

1. Line select key - Depress to position cursor over **POS** field. Verify position coordinates.

NOTE

Coordinates displayed are the computed position when the system was shut down. If correct, these coordinates may be used as the departure position.

2. Latitude - Insert **N** or **S** first, then degrees, minutes,
3. Latitude - Insert **N** or **S** first, then degrees, minutes, and tenths of a minute.
4. **ENTER** key - Depress.

NOTE

If coordinate field flashes after entry, verify coordinates and depress **ENTER** again. Coordinate field will flash if the entered value varies more than 10 arc minutes from the displayed value. If only one coordinate is in error, it may be updated individually by depressing the **N, S, E,** or **W** key to access the desired field.

5. Longitude - Insert **E** sert **E** or **W** first, then degrees, minutes, and tenths of a minute.
6. **ENTER** key - Depress.

r. Building Flight Plans (FPL).

(1) Creating a flight plan (figs. 3-67, 3-68, and 3-69).

1. **FPL** key - Depress to display **FLIGHT PLAN LIST** page.
2. Line select key - Depress to position cursor on blank line and display the **NEXT FPL** number.

NOTE

If several flight plans are displayed, position cursor on page then depress the **BACK** key to show the **NEXT FPL** number available. A flight plan may be selected by bringing the cursor onto the **FLIGHT PLAN LIST** page and entering the desired number in the cursor.

3. **ENTER** key - Depress to display **FLIGHT PLAN** page.
4. Appropriate departure airport identifier - Type into cursor field.

NOTE

Identifier may contain from 1 to 6 characters in any combination of letters and numbers.

5. **ENTER** key - Depress.
6. Waypoint coordinates and data - Verify. If a specific runway is desired, depress the appropriate line select key to place the cursor over the desired runway.
7. **ENTER** key - Depress to store way point.
8. Next waypoint - Type on flight plan. A standard instrument departure **(SID)** may be selected at this time by placing the cursor over the **DEPART** field using the line select key, then depressing **ENTER.** A jet or victor airway may also be entered at this time.
9. Repeat steps 7 through 9 for the remaining waypoints.

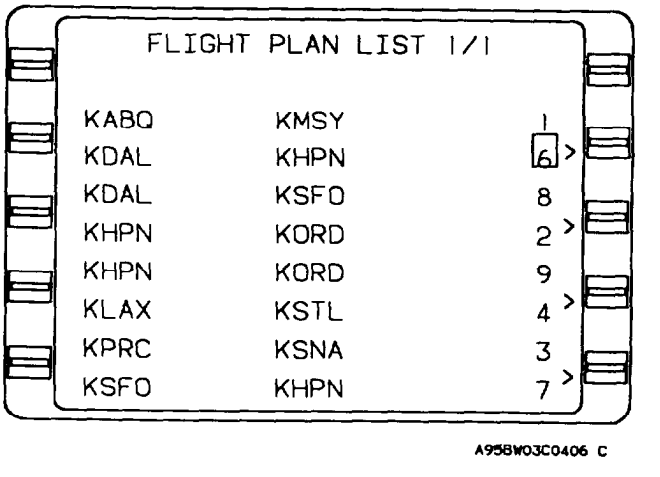

Figure 3-68. Flight Plan List 1/1 Page

NOTE

A maximum of 50 waypoint identifiers can be entered on stored flight plans and 100 on the active flight plan.

Attempting to enter more than the maximum allowed will cause **FPL FULL** to be displayed with the identifier flashing in the cursor.

Attempting to enter more than *999* pilot entered waypoints in memory causes **MEM FULL** to be displayed on the **FLIGHT PLAN** page. The **MSG** light will flash and **WPT MEM FULL** will be displayed on SYSTEM **MESSAGES** page.

If necessary, use the **PRV** or **NXT** key to cycle through all available **FLIGHT PLAN LIST** pages.

If all 56 flight plans are used, **NO FPL AVAIL** will appear in the field. Any of the stored flight plans may be erased to allow additional entries. The procedure is described under modifying a flight plan.

The flight plan is referenced according to departure and destination pairs and is automatically sequenced in alphabetical order on the **FLIGHT PLAN LIST** page.

(2) Using duplicate waypoint identifiers. There are several waypoints around the world with the same identifier. If the identifier selected has more than one waypoint associated with it, additional pages will be indicated on line 1 (that is 1/2 etc.). The waypoint nearest the aircraft position will be displayed first.

(a) Selecting an alternate waypoint location.

1. **PRV** or **NXT** key - Depress until desired country name is displayed.
2. **ENTER** key - Depress to store waypoint.

(3) Reviewing waypoint data/coordinates **(FLIGHT PLAN** pages only).

(a) Accessing desired flight plan.

1. **FPL** key - Depress to position the cursor over desired flight plan number.

NOTE

Flight plans are listed in alphabetical order.

2. Line select key - Depress to position the cursor over desired flight plan number.

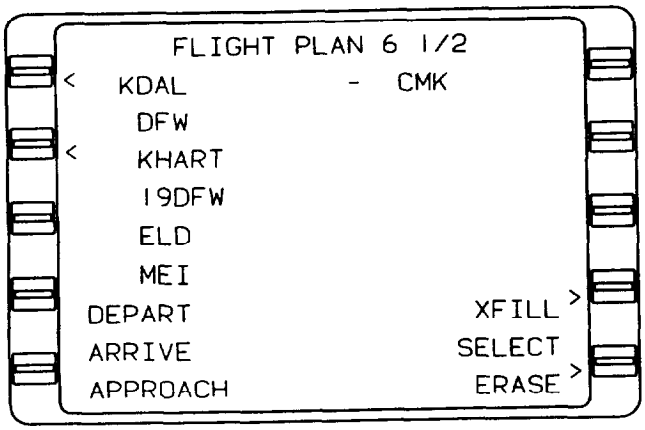

Figure 3-69. Flight Plan 1/2 Page

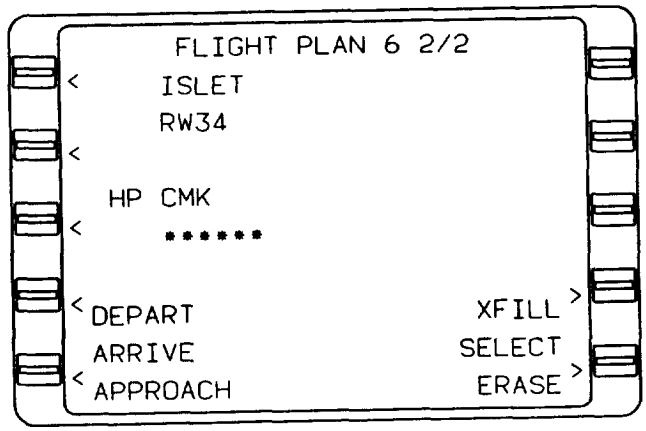

Figure 3-70. Flight Plan 2/2 Page

3. **ENTER** key - Depress.

4. Line select key - Depress to position cursor over identifier to be reviewed.

5. **ENTER** key - Depress.

6. Waypoint coordinates - Verify.

7. **ENTER** key - Depress. The flight plan is displayed with the cursor over the next waypoint.

8. Repeat steps 2 through 4.

NOTE

This procedure may also be used for reviewing waypoint information on the active flight plan page.

s. SIDs, STARS, Approaches, and Airways. The standard instrument departure **(SID),** standard terminal arrival route **(STAR),** approach, and airway retrieval features are designed to relieve flight crew workload. **SIDs** and **STARs** require such procedures as flying headings and altitudes, as well as intercepting VOR radials and DME arcs, etc. Approaches are flown waypoint to waypoint until the missed approach point. Missed approach procedures must then be flown manually. The FMS is only designed to provide meaningful input to the HSI when a track between two waypoints or when pseudo VORTAC procedures are used. The system is not designed to fly full **SID** or **STAR** procedures.

When flying those portions of a **SID** or **STAR** that are not tracks between fixes, the aircraft should be flown manually or in **HEADING** mode. In some cases, pseudo VORTAC procedures can be used to establish an intercept to a published track. When using the pseudo VORTAC mode, or upon intercepting a published track between two waypoints (fixes), the aircraft may be flown in reference to the cross track deviation provided by the FMS or by coupling the FMS roll command to the autopilot.

(1) Entering SID, STAR, approach, or airway waypoints. The following procedures allow the pilot to automatically add waypoints stored in the database, as part of a **SID, STAR,** approach, or airway to either a stored or active flight plan by entering the **SID, STAR,** approach, or airway by name. These procedures provide an abbreviated method of waypoint entry, eliminating the need to enter individual waypoint identifiers for SIDs, STARS, approaches, and airways.

NOTE

When a **SID, STAR,** approach, or airway is added to an existing flight plan, duplicate waypoints may occur. To avoid an inconsistent flight plan and resulting map display, it may be necessary to delete any duplicate waypoints. Also, the routings and coordinates must be verified. These procedures must not be used in lieu of charts.

(a) Entering a SID (fig. 3-70).

1. Line select key - Depress to position cursor of the **DEPART?** field.

2. **ENTER** key - Depress to display **DEPARTURE** page.

3. Departure airport - Verify or insert valid identifier.

NOTE

If the first waypoint on the flight plan is an airport, the departure identifier prefills and the cursor will be positioned over the **SID** field.

If the first waypoint on the flight plan is a runway, the **RUNWAY** field also prefills and the cursor is over the **SID** field.

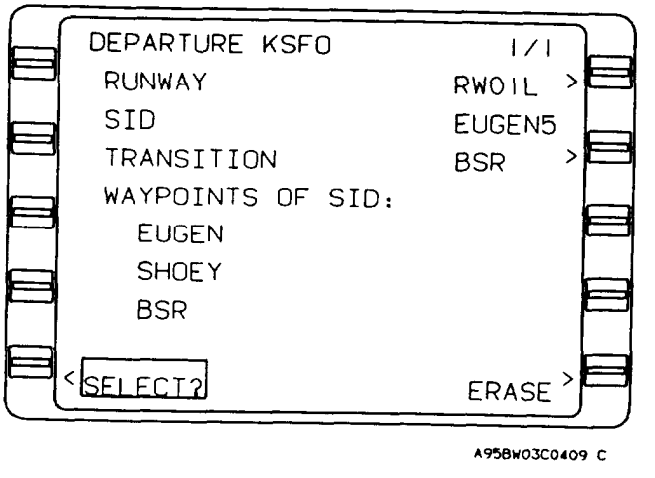

Figure 3-71. Departure 1/1 Page

If there are no SIDs associated with the departure airport, the message **NO SIDS AVAILABLE** appears and the ident field will flash. Depress the **FPL** key to return to active flight plan.

4. **BACK** key - Depress to display list of available SIDs.
5. Line select key - Depress to display list of available SIDs.
6. **ENTER** key - Depress to select **SID.**

NOTE

Cursor moves to the **TRANSITION** field.

7. **BACK** key - Depress to display list of available **TRANSITIONs.**
8. Line select key - Depress to position cursor over the desired **TRANSITION.**
9. **ENTER** key - Depress to select **TRANSITION.**

NOTE

If the **SID** and **TRANSITION** are runway dependent, and a runway has not prefilled, the cursor moves to the **RUNWAY** field and the message **RUNWAY REQUIRED** appears.

10. **BACK** key - Depress to display a list of applicable runways.
11. Line select key - Depress to position cursor over the desired runway.
12. **ENTER** key - Depress to select **RUNWAY.**
13. Departure **SID** waypoints - Review, then depress the **ENTER** key to insert **SID** into active flight plan and return to the **ACTIVE FLIGHT PLAN** page.

NOTE

SID waypoints appear indented from other waypoints in a flight plan.

(2) Reviewing a SID.

1. Line select key - Depress to position cursor over the **DEPART** field on the flight plan page.
2. **ENTER** key - Depress to review **SID.**
3. **BACK** key - Depress.

NOTE

SELECT will not appear as an option since a **SID** already exists in the flight plan.

(3) Editing a SID.

1. Line select key - Depress to position cursor over the **DEPART** field on the flight plan page.
2. **ENTER** key - Depress.
3. Line select key - Depress to position cursor over the **SID** field.
4. **BACK** key - Depress to display a list of alternate SIDs.

NOTE

A list will only appear if the **TRANSITION/ RUNWAY** are compatible with other SIDs.

5. Line select key - Depress to position cursor over the desired **SID.**
6. **ENTER** key - Depress to select desired **SID.**
7. **ENTER** key - Depress to insert new **SID** into the flight plan.

NOTE

The **TRANSITION** and **RUNWAY** can also be edited without changing the original **SID** by positioning the cursor over the appropriate field and following the above procedure.

(a) Erasing a SID.

1. Line select key - Depress to position cursor over **DEPART** field on the flight plan page.
2. **ENTER** key - Depress.
3. Line select key - Depress to position cursor over **ERASE?**
4. **ENTER** key - Depress to erase **SID** and return to flight plan page.

(b) Adding SID waypoints.

NOTE

When a **SID** is modified by adding or deleting waypoints, the sequence of waypoints is no longer identified as a **SID.**

1. Line select key - Depress to position cursor over the **SID** waypoint

identifier that will follow the new entry.

2. Waypoint identifier - Insert.

3. **ENTER** key - Depress twice.

NOTE

The previously indented **SID** waypoints move over one space to the left on the screen and are treated as normal waypoints in the flight plan.

(c) Deleting SID waypoints.

NOTE

When a **SID** is modified by adding or deleting waypoints, the sequence of waypoints is no longer identified as a **SID.**

1. **BACK** key - Depress.

2. **ENTER** key - Depress.

(d) Entering an airway (destination waypoint unknown) (fig. 3-71). Enroute airways include high altitude jet routes and low altitude airways.

1. Line select key - Depress to position cursor directly below the starting waypoint on the desired airway.

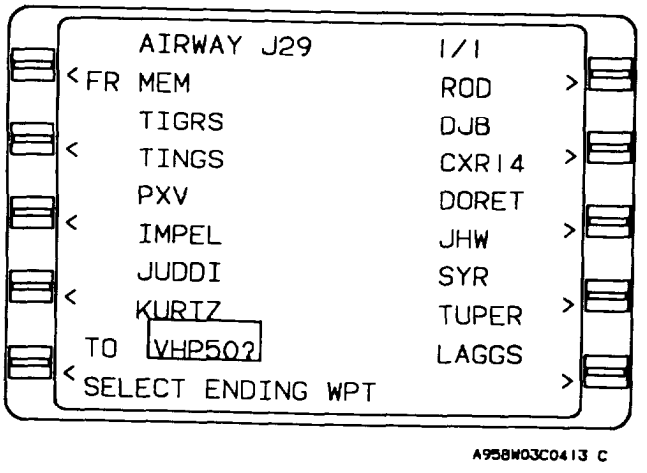

Figure 3-72. Airway 1/1 Page

2. Airway identifier - Insert.

3. # key - Depress and enter airway identifier.

4. **ENTER** key - Depress.

NOTE

If the waypoint above the cursor is not on the airway, the airway identifier will blink on the screen and a new identifier must be entered.

The flight plan should always be checked for duplicate waypoints and the appropriate waypoints erased.

5. Line select key - Depress to position cursor over the desired destination waypoint. If applicable, use **PRV** and **NXT** keys to access all airway waypoints pages.

NOTE

As the cursor is moved up or down, **TO** will appear next to the cursor and a question mark will follow the identifier.

6. **ENTER** key - Depress after selecting the ending waypoint on the airway. To merge the airway waypoints into the flight plan, return to the **FPL** page.

NOTE

If inserting the airway segment into the flight plan results in more than 50 waypoints in the flight plan, the message **FPL FULL** will appear.

(e) Entering an airway (destination waypoint known). Enroute airways include high altitude jet routes and low altitude airways.

1. Line select key - Depress to position cursor directly below the starting waypoint on the desired airway.

2. Airway identifier - Insert.

3. # key - Depress and enter airway identifier.

4. ± key - Depress and enter destination waypoint.

5. **ENTER** key - Depress.

NOTE

If the waypoint above the cursor is not on the airway, the airway identifier will blink on the screen and a new identifier must be entered. If the destination waypoint is not on the airway, use the procedure for entering an airway (destination waypoint unknown).

6. Line select key - Depress to position cursor over a different destination waypoint to change ending waypoint. If applicable, use **PRV** and **PRV** and **NXT** keys to access all airway waypoint pages.

NOTE

As the cursor is moved up or down, **TO** will appear next to the cursor and a question mark will follow the ident.

7. **ENTER** key - Depress to merge the airway waypoints into the flight plan and return to the flight plan page.

NOTE

If inserting the airway segment into the flight plan results in more than 50 waypoints in the flight plan, the message **FPL FULL** will appear.

8. Additional waypoint identifiers - Enter (if applicable) to chain SWeral airways together.

(f) Editing an airway. Once an airway is merged into the flight plan, waypoints can be added to or deleted from the flight plan on the flight plan page using normal edit procedures. To add or delete waypoints from the selected airway segment, perform the following.

1. Line select key - Depress to position cursor over an airway waypoint.
2. # key - Depress and enter appropriate airway identifier.
3. **ENTER** key - Depress.
4. Line select key - Depress to move the cursor to shorten, lengthen, or erase the previously selected segment of the airway. If applicable, use **PRV** and **NXT** keys to access all airway waypoint pages.
5. **ENTER** key - Depress to merge the edited airway segment into the flight plan.

(g) Entering a STAR (fig. 3-72).

1. Line select key - Depress to position cursor over **ARRIVE?** field.
2. **ENTER** key - Depress to display **ARRIVAL** page.
3. **ARRIVAL** airport - Verify or insert valid ident.

NOTE

If the last waypoint on the flight plan is an airport or if an approach is programmed, the arrival ident prefills and the cursor will be over the first **RUNWAY** in the list.

If the last waypoint on the flight plan is a runway, the **RUNWAY** field also prefills and the cursor will be over the first **TRANSITION** in the list.

If there are no STARs associated with the arrival airport, the message **NO STARS AVAILABLE** will appear and the identifier field will flash. Depress **FPL** key to return to **ACTIVE FLIGHT PLAN.**

4. Line select key - Depress to position cursor over the desired **TRANSITION.**

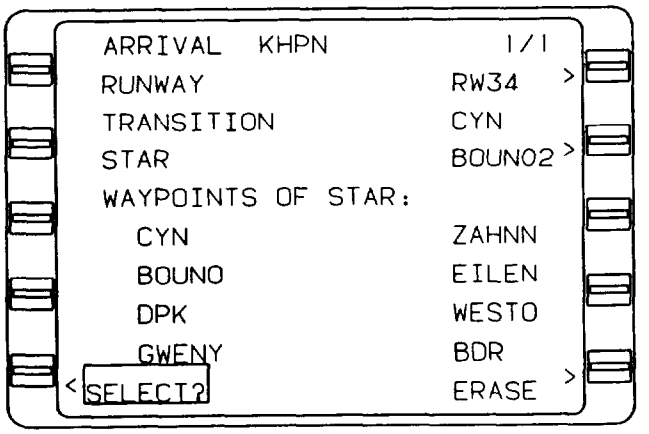

Figure 3-73. Arrival 1/1 Page

5. **ENTER** key - Depress to select **TRANSITION.**

NOTE

Cursor will move to the **STAR** field.

6. Line select key - Depress to position cursor over the desired **STAR.**

7. **ENTER** key - Depress to select **STAR.**

NOTE

If the **STAR** and **TRANSITION** are runway dependent, and a runway has not prefilled, the cursor will move to the **RUNWAY** field and the message **RUNWAY REQUIRED** will appear.

8. Line select key - Depress to position cursor over the desired **RUNWAY.**

9. **ENTER** key - Depress to select **RUNWAY.**

10. **STAR** waypoints - Review, then depress **ENTER** key to insert **STAR** into active flight plan and return to the **ACTIVE FLIGHT PLAN** page.

NOTE

STAR waypoints appear indented from the other waypoints on a flight plan.

(h) Reviewing a STAR.

1. Line select key - Depress to position cursor over the **ARRIVE** field on the **FLIGHT PLAN** page.

2. **ENTER** key - Depress to review **STAR.**

3. **BACK** key - Depress to return to **FLIGHT PLANL** page.

NOTE

SELECT will not appear as an option since a **STAR** already exists in the flight plan.

(i) Editing a STAR.

I. Line select key - Depress to position cursor over the **ARRIVE** field on the **FLIGHT PLAN** page.

2. **ENTER** key - Depress.

3. Line select key - Depress to position cursor over the **STAR** field.

4. **BACK** key - Depress to display a list of alternate STARs.

NOTE

A list will only appear if the transition is compatible with other STARs.

5. Line select key - Depress to position cursor over the desired **STAR.**

6. **ENTER** key - Depress to select desired **STAR.**

NOTE

Cursor will move to **SELECT?** field.

7. **ENTER** key - Depress to insert new **STAR:x. into the flight plan.**

NOTE

The **TRANSITION** or **RUNWAY** can also be edited without changing the original **STAR** by positioning the cursor over the appropriate field and following the above procedure.

(j) Erasing a STAR.

1. Line select key - Depress to position cursor over **ARRIVE** field on the **FLIGHT PLAN** page.

2. **ENTER** key - Depress.

3. Line select key - Depress to position cursor over **ERASE?**

4. **ENTER** key - Depress to erase **STAR** and return to **FLIGHT PLAN** page.

(k) Adding a STAR waypoint.

NOTE

When a **STAR** is modified by adding or deleting waypoints, the sequence of waypoints is no longer identified as a **STAR.**

1. Line select key - Depress to position cursor over the **STAR** waypoint identifier that will follow the new entry.

2. Waypoint identifier - Insert.

3. **ENTER** key - Depress twice.

NOTE

The previously indented **STAR** waypoints move over one space to the left on the screen and are treated as normal waypoints in the flight plan.

(l) Deleting a STAR waypoint.

1. Line select key - Depress to position cursor over the **STAR** waypoint identifier that will follow the new entry.
2. **BACK** key - Depress.
3. **ENTER** key - Depress.

(m) Entering an approach (figs. 3-73 and 3-74).

NOTE

The system must be configured for radio tuning or VOR inputs to execute RNAV approaches.

1. Line select key - Depress to position cursor over **APPROACH?** field.
2. **ENTER** key - Depress to display **APPROACH** page.
3. **APPROACH** airport - Verify or insert valid identifier.

NOTE

If the runway or approach type selected on the **APPROACH** page differs from the runway or approach type dictated by the **STAR, SEL RWY FROM STAR PG** is displayed at the bottom of the screen.

If there are no approaches associated with the approach airport, the message **NO APPROACH AVAIL** appears and the identifier field flashes. Depress **FPL** key to return to active flight plan.

4. Line select key - Depress to position cursor over the desired **RUNWAY.**
5. **ENTER** key - Depress to select **RUNWAY.** Cursor will move to the **TRANSITION** field.
6. Line select key - Depress to position cursor over the desired **TRANSITION.**

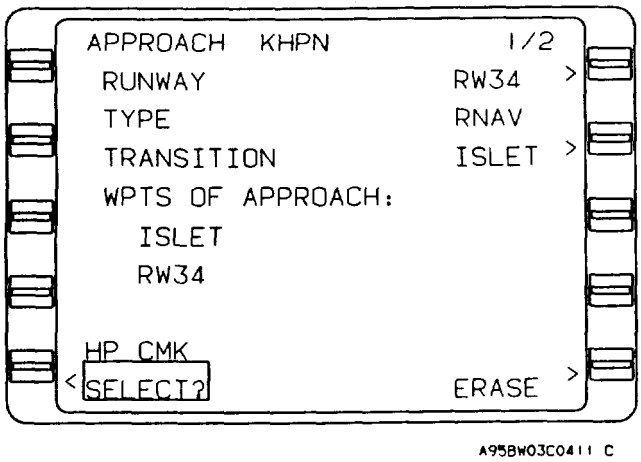

Figure 3-74. Approach 1/2 Page

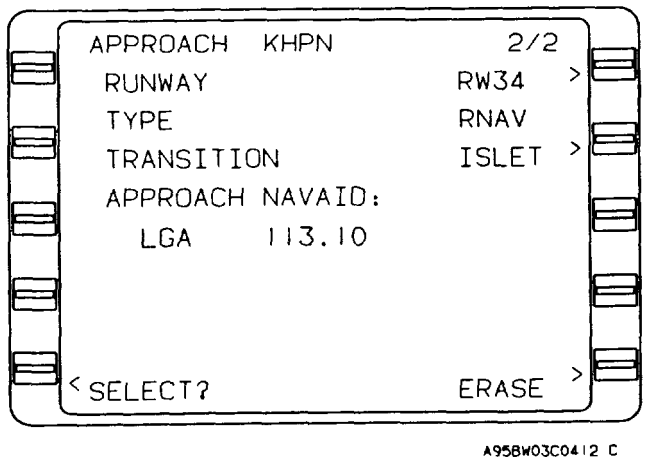

Figure 3-75. Approach 2/2 Page

7. **ENTER** key - Depress to select **TRANSITION.**
8. **APPROACH** waypoints - Review.
9. **ENTER** key - Depress to insert **APPROACH** into active flight plan and return to the **ACTIVE FLIGHT PLAN** page.

NOTE

PT indicates a procedure turn waypoint and **HP** indicates a holding pattern waypoint. A fence (+++++++) separates the missed approach procedure waypoint from the rest of the approach and auto leg changes can only be performed to waypoints before the fence (+++++++).

When the approach is flown, the system will provide guidance along the final approach course to the missed approach point. If the approach is missed, the pilot must manually sequence to the missed approach procedure waypoint using the **1** key.

(4) Executing approaches.

NOTE

The system is capable of executing GPS overlay NDB, RNAV, and VOR approaches only. No localizer, ILS, or MLS capability is available.

When executing a missed approach procedure, use the **FMS** heading mode or manually fly the procedure to ensure proper track and turn direction.

(a) Procedure turn. The following is a description of the screen displays typically seen while executing a procedure turn.

As the aircraft approaches the **PT** waypoint, a message is displayed on the fourth line of the CDU indicating the next action the aircraft will take. This message is displayed 30 seconds prior to the event and disappears when the action is initiated.

NOTE

Distance **(DIS)** displayed is the distance from the present aircraft position to the **TO** waypoint.

Estimated time enroute **(ETE)** is the time around the remainder of the procedure turn from the aircrafts present position.

(5) DME arc. The following is a brief description of the screen displays typically seen while flying a DME arc.

As the aircraft approaches the **AR** waypoint, a message is displayed on the fourth line of the CDU indicating the next action the aircraft will take **(NX DME ARC).** This message will be displayed for thirty seconds prior to the event and will disappear when the action is initiated.

NOTE

Distance **(DIS)** displayed is the distance from the present aircraft position to the **TO** waypoint.

Estimated time enroute **(ETE)** is the time around the arc path to the **TO** waypoint.

(6) Reviewing an approach.

1. Line select key - Depress to position cursor over the **APPROACH** field on the **FLIGHT PLAN** page.
2. **ENTER** key - Depress to review **APPROACH.**
3. **BACK** key - Depress to return to **FLIGHT PLAN** page.

NOTE

SELECT will not appear as an option since an **APPROACH** already exists in the flight plan.

(7) Editing an approach.

1. Line select key - Depress to position cursor over the **APPROACH** field on the **FLIGHT PLAN** page.
2. **ENTER** key - Depress to display **APPROACH** page.

The **RUNWAY, TYPE,** or **TRANSITION** may be edited by depressing the line select key next to the field to be edited. That field will turn from green to yellow and the previous information will turn to dashes. Alternate options may be available depending upon the information in the remaining two fields.

NOTE

SELECT will not appear as an option since an **APPROACH** already exists in the flight plan.

An **APPROACH CANCELLED** message will be displayed anytime an approach has been altered.

3. Line select key - Depress to position cursor over the desired **TRANSITION.**

4. **ENTER** key - Depress.

5. **ENTER** key - Depress to insert new **APPROACH** into the flight plan.

(8) Erasing an approach.

NOTE

Erasing an approach also erases the destination airport.

1. Line select key - Depress to position cursor over **APPROACH** field on the **FLIGHT PLAN** page.

2. **ENTER** key - Depress to display **APPROACH** page.

3. Line select key - Depress to position cursor over **ERASE?**

4. **ENTER** key - Depress to erase **APPROACH** and return to the **FLIGHT PLAN** page.

(9) Deleting an approach waypoint.

1. Appropriate **FPL** page - Display.

2. Line select key - Depress to position cursor over the **APPROACH** waypoint identifier that will follow the new entry.

3. **BACK** key - Depress.

4. **ENTER** key - Depress.

NOTE

When an **APPROACH** is modified by adding or deleting waypoints (including after the fence), the sequence of waypoints is no longer identified as an approach and the aircraft will not enter the approach mode.

An **APPROACH CANCELLED** message will be displayed anytime an approach has been altered.

(10) Using a STAR and an approach in the same flight plan. Since both the STAR and approach procedures allow for entry of **AIRPORT AND RUNWAY,** the following rules apply:

Changing the **AIRPORT** on the **ARRIVAL** page automatically erases the **APPROACH** procedure.

Changing the **AIRPORT** on the **APPROACH** page automatically erases the **STAR** procedure.

Changing the **RUNWAY** on the on the **ARRIVAL** page automatically erases the **APPROACH** procedure.

Changing the **RUNWAY** on the **APPROACH** page has no effect on the **STAR** procedure unless it is runway dependent.

If the **STAR** is runway dependent, the message **SEL RWY FROM STAR PG** (select runway from **STAR** page) appears on the **APPROACH** page. The pilot must return to the **ARRIVAL** page to change the **RUNWAY** for the **STAR** before changing the **RUNWAY** on the **APPROACH** page.

(11) Modifying a flight plan.

(a) Accessing desired flight plan. This procedure may be used to modify the **ACTIVE FLIGHT PLAN** or any stored flight plan. Access the active plan or stored flight plan by depressing the **FPL** key. Access a stored flight plan from the alphabetized **FLIGHT PLAN LIST** page, using the **PRV** or **NXT** key to cycle through the available pages. If necessary, refer to the procedure for flight plan selection under pre-departure.

NOTE

A change made to the active flight plan does affect the stored flight plan in memory. Any change made to a stored flight plan remains in memory.

(b) Deleting a waypoint.

1. Line select key - Depress to position the cursor over the waypoint identifier.

2. **BACK** key - Depress. **DELETE?** appears in the waypoint field to inform the pilot of the pending change.

3. **ENTER** key - Depress. The waypoint will be. deleted and the cursor will be displayed over the next waypoint.

NOTE

To remove a waypoint from non-volatile memory it must be deleted from all stored flight plans.

(c) Adding a waypoint (figs. 3-74 and 3-75).

A waypoint may be added anywhere in a flight plan sequence, except prior to the current **TO** waypoint if the **ACTIVE FPL** page is displayed.

1. Line select key - Depress to position the cursor over the waypoint identifier that will follow the new entry.
2. Waypoint identifier - Insert.
3. **ENTER** key - Depress.
4. Waypoint coordinates - Verify or insert.
5. **ENTER** key - Depress. The new waypoint is added to the flight plan sequence and the cursor is over the waypoint following the new entry.

(d) Erasing a stored flight plan.

1. **FPL** key - Depress to display the desired **FLIGHT PLAN LIST** page.
2. Line select key - Depress to position the cursor over the number of the **FPL** to be erased.
3. **ENTER** key - Depress.
4. Line select key - Depress to position cursor over **ERASE?**
5. **ENTER** key - Depress.

NOTE

If the active flight plan is erased, all waypoints except the **FR** and **TO** are deleted. A fence (----) is displayed indicating no auto leg change beyond the **TO** waypoint.

(12) Flight plan (FPL) selection.

1. **FPL** key or **NXT** key - Depress (if required) until desired **FLIGHT PLAN LIST** page appears.

NOTE

If desired flight plan is not listed refer to the procedure for creating a flight plan.

2. Line select key - Depress to position the cursor over the desired flight plan number.

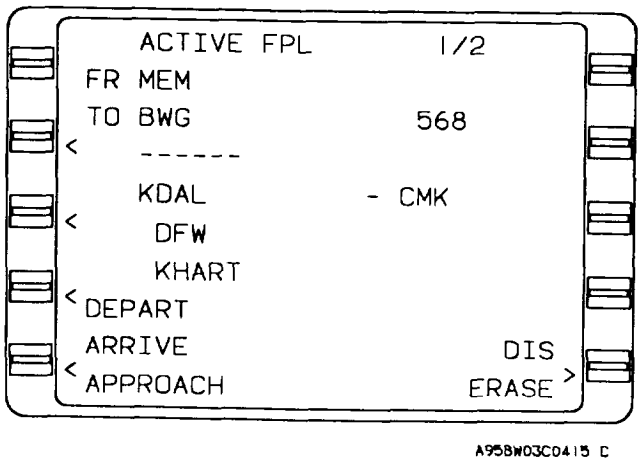

Figure 3-76. Active FPL 1/2 Page

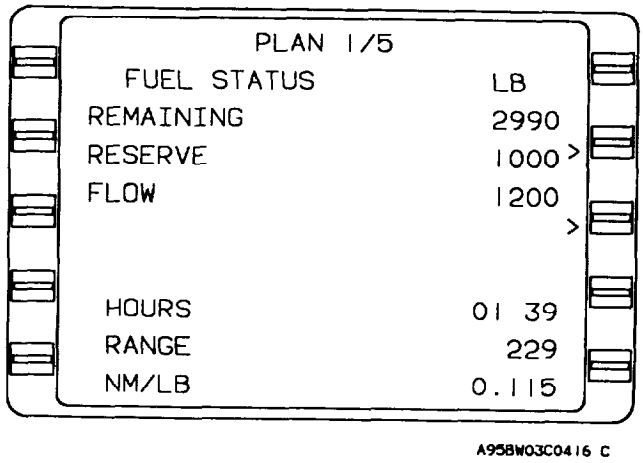

Figure 3-77. Active FPL 2/2 Page

NOTE

If desired flight plan number is known, position the cursor on the page, then enter the number and depress **ENTER** key.

3. **ENTER** key - Depress.

4. **FLIGHT PLAN** page - Verify flight plan. Review routing by depressing **PRV** or **NXT** key to page through multiple flight plan pages.

NOTE

Depress **FPL** or **NXT** key to sequence to an alternate flight plan with the same departure destination pair and higher flight plan number.

5. Line select key - Depress to position cursor over **SELECT?**

6. **ENTER** key - Depress to transfer stored flight plan to the active flight plan.

NOTE

If it is desired to invert and transfer the stored flight plan with waypoint sequence reversed to the active flight plan, depress the **BACK** key to display **INVERT?**

7. **ACTIVE FPL** - Confirm. Observe that the stored flight plan transferred to the active flight plan as **SELECTED** or **INVERTED.**

(13) Initial leg selection.

1. **NAV** key - Depress.

2. **FR** waypoint - Verify. The first waypoint on the active flight plan will appear in the **FR** field. To change the **FR** waypoint, insert the desired identifier.

3. **ENTER** key - Depress. The next waypoint in the active flight plan sequence will appear in the **TO** field.

4. **TO** waypoint - Verify. To change the **TO** waypoint, insert the desired identifier.

5. **ENTER** key - Depress.

6. **DIS, DTK** - Check.

(14) Manual primary navigation mode selection. This procedure is used to manually place the system into the primary navigation mode at the designated departure position. The GPS must track at least four satellites in order to navigate, but can also navigate in a degraded mode with three satellites and an external altitude input (air data computer).

1. **MSG** key - Depress.

2. **NAV RDY, HOLD/ENTER** message - Verify. This message indicates that the system is ready to enter the primary navigation mode.

3. **MSG** key - Depress to verify status of all sensors.

4. **HOLD** key - Depress to verify departure coordinates.

5. **ENTER** key - Depress twice to enter primary navigation mode.

(15) Enroute.

(a) DIRECT TO active flight plan waypoint. The direct to key function enables the pilot to fly directly to any waypoint on the active flight plan without reinserting the waypoint identifier.

1. Direct to key - Depress. A **DIRECT TO** page will appear with the cursor over the current **TO** waypoint.

2. Line select key - Depress to position the cursor over the desired identifier.

NOTE

Active flight plans exceeding 18 waypoints will be continued on subsequent pages. Depress direct to key, **NXT,** or **PRV** key to access remaining waypoints.

3. **ENTER** key - Depress. Display automatically advances to **NAVIGATION** page 1.

NOTE

The system must compute a turn from a wings level position. If the aircraft is in a turn when the direct to key is depressed, the aircraft will roll to a wings level position momentarily. The aircraft will then continue the turn toward the **DIRECT TO** waypoint.

If an offset waypoint was selected, an **OFF-SET WPT** page is displayed. Verify data and depress **ENTER. ENTER.** The **DIRECT** page is displayed with cursor over offset waypoint. Depress enter. Display automatically advances to **NAVIGATION** page 1.

4. **DIS, DTK** - Check.

(16) DIRECT TO HP waypoint. This procedure enables the pilot to proceed **DIRECT TO** the **HP** waypoint on the active flight plan and select or cancel the holding pattern or procedure turn programmed at the waypoint.

1. Direct **TO** key - Depress. A **DIRECT TO** page will appear with the cursor over the current **TO** waypoint.
2. Line select key - Depress to position the cursor over the desired **HP** identifier.

NOTE

Active flight plans exceeding 18 waypoints will be continued on subsequent pages. Depress direct to, **NXT,** or **PRV** key to access remaining waypoints.

3. **ENTER** key - Depress to display the **HOLDING PATTERN** page with both the **OK? ENTER** and **CANCEL** option.

To select and go direct to **HP** waypoint:

4. **ENTER** key - Depress. Display automatically advances to **NAVIGATION** page 1.
5. **ENTER** key - Depress.

To cancel holding pattern:

6. Line select key - Depress to position the cursor over **CANCEL?**
7. **ENTER** key - Depress. Display automatically advances to **NAVIGATION** page 1 and aircraft proceeds directly to waypoint with the holding pattern canceled.

(a) Direct to random waypoint. This procedure enables the pilot to add a random waypoint to the active flight plan in the desired sequence and proceed directly to it.

1. Direct to key - Depress. The cursor will automatically appear over the current **TO** waypoint on the **DIRECT TO** page.
2. Line select key - Depress to position the cursor over the identifier to follow the new entry.
3. Waypoint identifier - Insert.
4. **ENTER** key - Depress.
5. Waypoint page coordinates - Verify or insert. To insert waypoint coordinates (cursor over **POS** field):
   a. Latitude - Insert **(N** or **S** first, then degrees, minutes, and tenths of a minute).
   b. **ENTER** key - Depress.
   c. Longitude - **INSERT (E** or **W** first, then degrees, minutes, and tenths of a minute).
6. **ENTER** key - Depress.
7. Waypoint sequence - Verify.
8. **ENTER** key - Depress. Display automatically advances to **NAVIGATION** page 1.

NOTE

If **ENTER** key is not depressed prior to leaving **DIRECT** page, the waypoint identifier will not appear on the active flight plan and will need to be re-entered.

9. **DIS, DTK** - Check.

(b) Direct to closest airport. This procedure allows the pilot to select a desired airport and proceed **DIRECT TO** it.

1. Direct to key - Depress until **DIR CLOSEST ARP** page appears.

When initially accessed, the cursor will be over the airport closest to the aircraft's present position at that time.

2. Line select key - Depress to position the cursor over the desired airport identifier and depress **ENTER. NAVIGATION** page 1 will be displayed.

NOTE

The bearing and distance values to the closest airports are based on the aircraft's present position at the time this page is accessed. The values are not updated while the page is being displayed. To obtain updated information, it is necessary to exit the page, then return.

(17) Pseudo VORTAC. Inbound track (that is, holding patterns). Course guidance is also provided for a selected outbound radial,

1. **NAV** key - Depress to display **NAVIGATION** page 1.

NOTE

R or **L** should be used for a heading change greater than 180 degrees from the present heading. A **T** in the **HDG** and **DTK** fields indicates that the system is operating in the true heading mode.

2. **ENTER** key - Depress. The cursor advances to heading mode field.
3. **ENTER** key - Depress to select heading select mode and return to **NAVIGATION** page 1.

NOTE

HDG SELECT and the programmed heading are displayed on **NAVIGATION** page 1 indicating that the aircraft is in heading select mode.

(18) Changing heading vector while in heading select mode.

1. **HDG** key - Depress to display **HEADING VECTOR** page with cursor over the **HDG** field.
2. Heading - Insert desired heading.
3. **ENTER** key - Depress.

NOTE

Cursor moves to the heading mode field, but it is not necessary to depress **ENTER** key.

4. **NAV** key - Depress to check heading.

(19) Changing to waypoint while in heading select mode.

NOTE

This procedure establishes a leg between the new **TO** waypoint and the waypoint preceding it on the active flight plan or a pseudo VORTAC. If crosstrack distance exceeds 125 nautical miles, the **HEADING** mode will be canceled and the **STRG INVALID** message will be displayed.

1. **HDG** key - Depress to display **HEADING VECTOR** page.
2. Line select key - Depress to position the cursor over the **TO** waypoint.
3. **BACK** key - Depress to cycle through waypoints on the active flight plan or insert alternate waypoint.
4. **ENTER** key - Depress. If waypoint page appears:
   a. Waypoint page coordinates - Verify or insert.
   b. **ENTER** key - Depress. Cursor moves to **DTK** field.
5. Desired track **(DTK)** - Verify or insert.
6. **ENTER** key - Depress. **OK? ENTER** message will appear.
7. **ENTER** key - Depress to select **TO** waypoint and return to **NAVIGATION** page 1, with the cursor positioned over the leg change mode field.

NOTE

If the desired track is changed, a pseudo VORTAC is programmed. If the **DTK** entry positions the aircraft on the **FROM** side of the TO waypoint, the leg change mode displayed on **NAVIGATION** page 1 will switch to **MAN;** otherwise it remains in **AUTO.**

(a) Canceling heading select mode. Initiate a **DIRECT TO** procedure, using the direct to key, which immediately cancels the commanding heading or perform the following:

1. **HDG** key - Depress to display **HEADING VECTOR** page.
2. Line select key - Depress to position the cursor over **HDG SELECT.**
3. **BACK** key - Depress until **CANCEL?** is displayed.
4. **ENTER** key - Depress to cancel heading vector and return to **NAVIGATION** page 1.

(b) Programming an intercept.

1. **HDG** key - Depress to display **HEADING VECTOR** page with cursor over the HDG field.

2. Heading - Insert desired heading in whole degrees, preceded by **R** or **L,** if applicable, to indicate a turn direction.

NOTE

R or **L** should be used for a heading change greater than 180 degrees from the present heading. A **T** indicates the system is operating in the true heading mode.

3. **ENTER** key - Depress. The cursor advances to heading mode field.
4. **BACK** key - Depress to select **INTERCEPT?**
5. **ENTER** key - Depress. Cursor will move to the **TO** waypoint field.
6. **BACK** key - Depress to cycle through waypoints on the active flight plan or insert alternate waypoint.
7. **ENTER** key - Depress. If waypoint page appears:
   a. Waypoint page coordinates - Verify or insert.
   b. **ENTER** key - Depress. Cursor will move to **DTK** field.
8. Desired track **(DTK)** - Verify or insert.
9. **ENTER** key - Depress. An intercept message may appear (NO **COURSE INTERCEPT INTERCEPT BEYOND FIX** and **OK? ENTER).**
10. **ENTER** key - Depress. **NAVIGATION** page 1 appears, with the cursor positioned over the leg change mode.

NOTE

If the desired track is changed, a pseudo VORTAC is programmed. If the **DTK** entry positions the aircraft on the from side of the **TO** waypoint, the leg change mode switches to **MAN,** otherwise it remains in **AUTO.**

Once the intercept mode is programmed and the pilot returns to the **HEADING VECTOR** page, the intercept message is based on the current aircraft heading. However, to view the intercept message the cursor must be removed from the page.

(20) Programming a holding pattern. This procedure enables the pilot to program a holding pattern **(HP)** at a specific waypoint. An **HP** is automatically programmed from the database when it is part of an arrival or approach procedure.

1. **NAV, FPL,** or direct to key - Depress to display applicable page.
2. Line select key - Depress to position the cursor over desired waypoint.

NOTE

On **NAVIGATION** pages, only the **TO** waypoint can be selected, and on the **ACTIVE FLIGHT PLAN** page, a holding pattern cannot be programmed at the **FR** or **TO** waypoint.

A **T** adjacent to the value displayed in the **INBOUND CRS** field indicates that the course is referenced to true north.

3. **HOLD** key - Depress to display **HOLDING PATTERN** page with cursor over the **INBOUND CRS** field.
4. **INBOUND CRS** - Verify or insert.

NOTE

A verified inbound course programs a **DIRECT ENTRY** procedure: When an inserted inbound course value is beyond the **DIRECT ENTRY** parameters, then a **TEARDROP or PARALLEL** pattern is programmed.

A **T** adjacent to the value displayed in the **INBOUND CRS** field indicates that the course is referenced to true north.

5. **ENTER** key - Depress. The type of holding pattern may be displayed. Cursor will move to the **LEG TIME** field.
6. **LEG TIME** - Verify or insert (valid range 1.0 to 9.9 minutes).
7. If holding pattern is complete, proceed to step 10. If optional entries are required, continue with steps 8 or 9.
8. Optional entry: turn direction:
   a. Line select key - Depress to position cursor over **TURN DIR.**
   b. **BACK** key - Depress to change direction.
   c. **ENTER** key - Depress.

9. Optional entry: leg distance:

a. Line select key - Depress to position the cursor over **LEG DIS.**

b. Leg distance - Insert or verify (valid range 1.0 to 50 nautical miles).

c. **ENTER** key - Depress.

Selecting exit mode:

I0. Line select key - Depress to position the cursor over **MANUAL** or **AUTO.**

11. **BACK** key - Depress to select. Selecting **MANUAL** will initiate a continuous hold. Selecting **AUTO** will exit the hold after the second time over the fix.

12. **ENTER** key - Depress.

(21) Reviewing, editing, or canceling a holding pattern. This procedure enables the pilot to review, edit, or cancel a holding pattern at a specific waypoint.

(a) Reviewing a holding pattern.

1. **NAV, FPL,** or direct to key - Depress to display applicable page.

2. Line select key - Depress to position the cursor over **HP** or **PT** waypoint.

NOTE

On **NAVIGATION** pages, only the **TO** waypoint can be selected, and on the active flight plan, the **TO** waypoint can only be reviewed.

3. **HOLD** key - Depress to display **HOLDING PATTERN** page.

4. Holding pattern/procedure turn - Review.

(b) Editing a holding pattern.

1. Line select key - Depress to position cursor over the desired field.

a. Insert value for **INBOUND CRS, LEG TIME,** or **LEG DIS.**

b. **BACK** key - Depress to change **TURN DIR** or **EXIT MODE.**

2. **ENTER** key - Depress. The cursor will be positioned over **OK? ENTER.**

NOTE

A re-entry to the holding pattern must be flown if the inbound course or turn direction are changed while holding at the **TO** waypoint.

3. **ENTER** key - Depress.

(c) Canceling a holding pattern.

1. Line select key - Depress to position the cursor over **CANCEL?**

2. **ENTER** key - Depress. The **HP** annunciation is erased from **NAVIGATION, D,** and **FPL** pages.

NOTE

If canceling for the current **TO** waypoint, **HP** is replaced by **TO.**

(22) Exiting a holding pattern. This procedure gives the pilot three options to exit a holding pattern:

Exiting the next time over a holding fix.

Going **DIRECT TO** the holding fix.

Performing a leg change.

(a) Exiting holding pattern the next time over holding fix.

1. **NAV** key - Depress to display **NAVIGATION** page **1, 2,** or, **3.**

2. Line select key - Depress to position the cursor over **MANUAL.**

3. **BACK** key - Depress to display **AUTO?**

4. **ENTER** key - Depress. The **NAVIGATION** page indicates that the aircraft will **EXIT HOLD** the next time over the holding fix (aircraft will complete the loop around the holding pattern).

NOTE

The next **(NX)** waypoint may also appear if the exit is made during waypoint alert.

(b) Exiting holding pattern by going DIRECT TO holding fix.

1. Direct to key - Depress to display **DIRECT TO** page with cursor over current waypoint.

2. **ENTER** key - Depress to display **HOLDING PATTERN** page with cursor over **CANCEL?**

3. **ENTER** key - Depress to go **DIRECT TO** current **TO** waypoint (holding fix) and cancel holding pattern.

(c) Exiting holding pattern by performing a leg change.

1. **NAV** key - Depress to display the **NAVIGATION** page 1.

2. Line select key - Depress to position the cursor over **FROM** field **(HOLD RIGHT/LEFT).**

3. **FR** waypoint - Insert desired waypoint.

4. **ENTER** key - Depress. The next waypoint in the active flight plan sequence will appear in the **TO** field.

5. **TO** waypoint - Verify. To change the **TO** waypoint, insert the desired identifier.

6. **ENTER** key - Depress to activate the new leg and cancel the holding pattern.

t. Vertical Navigation (VNAV) Operation - Pre-Departure.

(1) Setting cruise altitude, transition level, and default flight path angle. This procedure allows the pilot to define a cruise altitude and change the default values for transition level and flight path angle after initial leg selection:

1. **VNAV** key - Depress to display **VNAV** page 1.

2. Line select key - Depress to position cursor over **DATA?**

3. **ENTER** key - Depress to display **ENTER** key - Depress to display **VNAV DATA** e with cursor over the **CRUISE ALT** field.

4. Cruise altitude - Insert.

NOTE

Only two or three digits are required to input an altitude (that is, enter 80 and and 8000 will be displayed).

Any altitude entered greater than the **TRANS LEVEL,** which normally defaults to FLI80, is converted and displayed as flight level **(FL).** For example, entering 210 will display **FL210.**

An altitude less than 1000 feet must be entered with a preceding zero (that is, enter 052 and 52 will be displayed).

A (at or above) or **B** (at or below) constraint entries are not applicable. Setting a cruise altitude will establish a **#TOD** (top of descent) waypoint or a **#TOC** (top of climb) waypoint if **VNAV** is valid. A **#TOC** will be established only if there are no altitude constraints between the aircraft and **#TOC.**

5. **ENTER** key - Depress.

6. Transition level - Insert or verify.

NOTE

Field defaults to **FL180** if pilot does not enter a value. Anytime a **TRANS ALT** is entered, the value will remain in non-volatile memory even after the system is shut down.

7. **ENTER** key - Depress.

8. Default flight path angle **(DEFAULT FPA)** - Insert or verify (in degrees and tenths of a degree, 0.1 to 6.0 range).

NOTE

Field defaults to 3.0 if pilot does not enter a value. Anytime an **FPA** is entered, the value will remain in non-volatile memory even after the system is shut down.

9. **ENTER** key - Depress to return to **VNAV** page.

(2) Creating/changing VNAV waypoints. Vertical navigation constraints can only be programmed for waypoints on the active flight plan, and though all active flight plan waypoints are displayed on **VNAV** pages, new waypoints must be added to the active flight plan before they appear on the **VNAV** flight plan after initial leg selection:

1. **NAV, FPL,** or direct to key - Depress to display applicable page.

2. Line select key - Depress to position cursor over desired waypoint.

NOTE

On **NAVIGATION** pages, only the **TO** waypoint can be selected.

3. **VNAV** key - Depress to display **VNAV WAYPOINT** page for selected waypoint.

4. **ALT** - Insert altitude constraint followed by an **A** (at or above) or a **B** (at or below), if applicable. Only two or three digits are required to input an altitude (that is, enter 30A and **3000A** will be displayed). Full digit entry may be used to enter an altitude. Altitudes less than l000 feet are entered with a preceding zero (that is, enter 054 and 54 feet will be displayed). Any altitude entered greater than the transition level is converted and displayed as flight level **(FL).**

NOTE

If the waypoint is part of a **SID, STAR,** or approach procedure, the altitude constraint prefills from database.

5. **ENTER** key - Depress. Cursor moves to **OFFSET** field.

6. **OFFSET** - If applicable, insert value in nautical miles (-99 to +99 range). If offset is prior to the waypoint, enter the range value and a (-) will prefill as a default. Enter a (+), then the range value, to indicate that the offset is beyond the waypoint.

7. **ENTER** key - Depress. The cursor moves to the **FPA** field.

NOTE

The cursor moves to the **FPA** field only if the entered constraint is below the aircraft's present altitude.

To erase the offset value, insert **0** and depress **ENTER** key. The field will change to dashes, indicating that no offset is programmed.

(a) Programming a descent path.

1. Flight path angle **(FPA)** - Insert or verify (valid range is 0.1 to 6.0 degrees).

NOTE

The **FPA** value field prefills with the default **(DEF)** value programmed on the **VNAV DATA** page if this waypoint was accessed from the **FPL** page. If accessed from the **NAV** or **DIRECT** page, the field prefills with the **(DIR)** value. If an **FPA** is manually entered, the **FPA** type field changes to **(MAN).**

2. With the cursor over the **FPA** value, depress the **BACK** key to cycle through the following:

Default **(DEF) FPA** from **VNAV DATA** page.

Automatic **(AUTO) FPA** if the programmed altitude is a cross at type constraint and there is a waypoint prior to the **AUTO FPA** waypoint that has a cross at constraint programmed. If no constraint is programmed prior to the **AUTO FPA** constraint the system uses the **DEF FPA** value as **AUTO.**

Direct **(DIR) FPA** when waypoint is called up on a **DIRECT** or **NAVIGATION** page, altitude crossing is defined, and direct **FPA** is within valid range.

NOTE

To cancel the **FPA,** insert **0** then depress **ENTER** key. The field changes to dashes, indicating no **FPA** is programmed, the vertical deviation output is invalid and no vertical deviation information will be displayed on the CDU or the ADI/HSI.

3. **ENTER** key - Depress.

NOTE

When an **FPA** is programmed at a waypoint, a **G** appears next to the altitude constraint indicating a glideslope and vertical deviation information will be available. If a glide path is programmed to a runway or **ARP** and it is not part of an approach procedure, the vertical deviation will become invalid at 1000 feet above the airport elevation.

(3) Reviewing VNAV database waypoints. When SIDs, STARS, or approaches have altitude constraints at waypoints on the procedure the system automatically loads the altitude constraints on the active flight plan. The system will not load any expect to cross altitudes on the **ACTIVE FLIGHT PLAN** page.

NOTE

The system will not fly a full **SID** or **STAR** procedure.

(a) Reviewing VNAV database waypoints using active flight plan page.

1. FPL key - Depress to display the **ACTIVE FLIGHT PLAN** page.
2. Line select key - Depress to position the cursor over the desired waypoint.
3. **VNAV** key - Depress. The **VNAV WAYPOINT** page appears with the cursor over the **ALT** field.
4. **ALT** - Review or insert new value.

NOTE

If **(AUTO) FPA** is displayed, the system has automatically programmed a waypoint-to-waypoint **FPA** for the procedure.

5. **ENTER** key - Depress until display returns to **ACTIVE FLIGHT PLAN** page.
6. Repeat steps 2 through 5 to review or change altitude constraints at remaining waypoints.

(b) Reviewing VNAV database waypoints using VNAV flight plan page,

1. **VNAV** key - Depress to display the **VNAV** page.
2. Line select key - Depress to position the cursor over the desired waypoint.
3. **ENTER** key - Depress. The **VNAV WAYPOINT** page appears with the cursor over the **ALT** field.
4. **ALT** - Review or insert new value.

NOTE

If the **FPA** was retrieved from the database, **(DB)** will appear in the **FPA** type field.

5. **ENTER** key - Depress to return to the **VNAV** page.
6. Steps 2 through 5 - Repeat to review or change altitude constraints at remaining waypoints.

(c) Reviewing VNAV database waypoints using **DIRECT TO** or **NAVIGATION** pages.

NOTE

A vertical direct can only be programmed for a descent.

1. Direct to or **NAV** key - Depress to display applicable page.
2. Line select key - Depress to position the cursor over the desired waypoint on the **DIRECT** page or the **TO** waypoint on **NAVIGATION** pages.
3. **VNAV** key - Depress. The **VNAV WAYPOINT** page appears with cursor over the **FPA** field, if an altitude constraint has been programmed and the current barometric altitude is above the programmed altitude constraint.

NOTE

When accessing the **VNAV WAYPOINT** page from the DIRECT page or the **NAVIGATION** pages, the **FPA** prefills with **(DIR)** and the direct **FPA** value from the aircraft's present position to the **VNAV** waypoint, provided the direct **FPA** is within the valid range.

4. **ENTER** key - Depress. The waypoint will become the current vertical **TO** waypoint and all constraints prior to the waypoint will be erased. The **VNAV** page 1 will appear displaying vertical deviation.

NOTE

The **VNAV** direct waypoint need not be the same as the lateral **TO** waypoint.

u. Vertical Navigation - Enroute.

(1) Programming path descents. The pilot can use various methods to set a flight path angle that determines the aircraft's path descent.

NOTE

When the system detects a rapid change of barometric altitude setting or non-continuous data from an air data computer, the vertical deviation output is momentarily interrupted. When vertical deviation returns to a valid state, the appropriate value of vertical deviation will again be displayed.

(a) *Programming path descents using database FPA.* The database contains flight path angles (FPA) associated with waypoints (for example approaches to runway thresholds) that prefill when programmed into the active flight plan. The **FPA** field on the **VNAV WAYPOINT** page displays **(DB)** and vertical deviation is provided at the programmed angle when the waypoint becomes the vertical **TO** waypoint.

(b) Programming path descents using default FPA. The pilot can select the default **FPA** (set on the **VNAV DATA** page) by depressing the **BACK** key when the cursor is on the **FPA** field of the **VNAV WAYPOINT** page. The **FPA** field displays **(DEF)** and vertical deviation is provided at the programmed angle when the waypoint becomes the vertical **TO** waypoint.

(c) Programming path descents using manual FPA. The pilot can enter a desired flight path angle on the **VNAV WAYPOINT** page. The **FPA** field displays **(DEF)** and vertical deviation is provided at the programmed angle when the waypoint becomes the vertical **TO** waypoint.

(d) Programming path descents using automatic FPA. The **(AUTO)** mode is provided to link together descent waypoints that have cross at type constraints and provide a computed flight path angle between them.

The **(AUTO)** mode may be selected only if the chosen waypoint has a cross at type constraint programmed. All cross at waypoints that are a part of a **STAR** or approach are automatically put into **(AUTO)** mode when the procedure is retrieved from the database and loaded onto the active flight plan.

If the waypoint prior to the selected **(AUTO) FPA** waypoint has a cross at or above, cross at or below, or cross between constraint programmed, an automatic angle of the programmed default angle on **VNAV DATA** page is assigned. Vertical deviation is provided at the programmed angle when the waypoint becomes the descent reference waypoint.

NOTE

If no **ALT** constraints are programmed before the selected **(AUTO) FPA** waypoint, the **(AUTO) FPA** is the same as the **(DEF) FPA.**

Unless an **FPA** is programmed at a waypoint, the system uses the **(DEF) FPA** to the first waypoint on the flight plan with an altitude constraint to establish **#TOD.** To help establish **#TOD,** the system will automatically load the destination airport elevation on the flight plan, provided the flight plan was not obtained from AFIS. An altitude constraint and **FPA** must be programmed to establish a path descent and activate vertical deviation.

(2) Editing altitude constraints. The pilot can edit altitude constraints for waypoints on subsequent VNAV pages (referred to as VNAV flight plan pages) by using the VNAV page or the VNAV waypoint page.

(a) Editing altitude constraints using *VNAV page.*

1. **VNAV** key - Depress to display **VNAV I/2** page. The altitude constraint may be changed on this page if the current **TO** waypoint has a constraint programmed. Type the altitude in the altitude field. All parameters associatcd with the previous constraint will remain unchanged (that is, **FPA, A, B, G,** or **OFFSET).**
2. **VNAV** key - Depress to position the cursor over the desired waypoint altitude.
3. Line select key - Depress to position the cursor over the desired waypoint altitude.
4. Altitude constraint - Insert new altitude constraint followed by **A** (at or above) or **B** (at or below), if applicable. Any altitude entered greater than the transition level is converted and displayed as **FL** (flight level, rounded off to the nearest hundred feet). An altitude less than 1000 feet must be entered with a preceding zero.
5. **ENTER** key - Depress.

(b) Editing altitude constraints using VNAV WAYPOINT page.

1. **NAV, FPL,** or direct to key - Depress to display applicable page.
2. Line select key - Depress to position cursor over desired waypoint.

NOTE

On **NAVIGATION** pages, only the **TO** waypoint can be selected.

3. **VNAV** key - Depress to display **VNAV WAYPOINT** page for selected waypoint.
4. **ALT** - Insert altitude constraint followed by **A** (at or above) or **B** (at or below), if applicable. Only two

or three digits are required to input an altitude (for example, enter 30A and **3000A** will be displayed).

Any altitude entered greater than the transition level is converted and displayed as flight level (FL). An altitude less than 1000 feet must be entered with a preceding zero.

NOTE

If the waypoint is part of a **SID, STAR,** or approach procedure, the altitude constraint will prefill from the database. Cross between two altitude type constraints cannot be programmed manually.

5. **ENTER** key - Depress. Cursor will move to **OFFSET** field.
6. **ENTER** key - Depress. Cursor will move to the **FPA** field.
7. **ENTER** key - Depress to return to the page where the **VNAV way point was accessed.**

(3) Direct to VNAV waypoint as a lateral *waypoint.* This procedure enables the pilot to proceed direct to a waypoint, both vertically and laterally.

1. Direct to key - Depress. A **DIRECT TO** page will appear with the cursor over the current **TO** waypoint.
2. Line select key - If applicable, depress to position cursor over desired waypoint.

NOTE

Active flight plans containing more than 18 waypoints will display the remaining waypoints on subsequent pages. Depress the direct to key again, or **NXT** key, to access the remaining pages.

3. **ENTER** key - Depress. **CDU** screen automatically advances to **NAVIGATION** page 1.

NOTE

If an offset waypoint was selected, the system displays the **OFFSET WPT** page. Verify data and depress **ENTER.** The **DIRECT** page will again be displayed with the cursor over the offset waypoint. When **ENTER** is depressed the display will automatically advance to **NAVIGATION** page 1.

4. Line select key - Depress to position cursor over the **TO** waypoint.
5. **VNAV** key - Depress to display the **VNAV WAYPOINT** page for **TO** waypoint.
6. **ALT** - Insert or verify. If an altitude constraint has already been programmed, the cursor will be displayed over the **(DIR) FPA** field and proceed to step 10.

NOTE

If the waypoint is a part of a **SID, STAR,** or approach procedure, the altitude constraint will prefill from the database.

7. **ENTER** key - Depress. Cursor will move to **OFFSET** field.
8. **OFFSET** - If applicable, insert value in nautical miles (-99 to +9 range).
   a. If offset is prior to the waypoint - Enter range value and and a (-) will prefill as a default.
   b. If offset is beyond waypoint - Enter a (+), then range.

NOTE

To erase the offset value, insert 0 and depress **ENTER** key. The field will change to dashes, indicating that no offset is programmed.

9. **ENTER** key - Depress. Cursor will move to the FPA field.

NOTE

Cursor will only move to the **FPA** field if altitude constraint is below current barometric altitude.

10. Flight path angle - Verify direct flight path angle is desirable to fly.

NOTE

Direct flight path angle prefills if it is within the valid range (0.1 to 6.0 degrees).

11. **ENTER** key - Depress to accept waypoint entries. **VNAV** page 1 is displayed and vertical deviation is enabled if a descent has been programmed.

(4) Direct to VNAV waypoint. 'Ibis procedure allows the pilot to program a direct to on the vertical flight plan, while still flying the lateral waypoints on the active flight plan. The **VNAV** direct to function automatically deletes any intermediate constraints and sets up a path

descent to the vertical to waypoint using the direct flight path angle.

1. Direct to key - Depress. A **DIRECT TO** page will appear with the cursor over the current **TO** waypoint.
2. Line select key - Depress to position cursor over desired waypoint.
3. **VNAV** key - Depress. **VNAV WAYPOINT** page will appear. If necessary, position cursor over **ALT** field. If a constraint has already been programmed, go to step 8.
4. **ALT** - Insert or verify.
5. **ENTER** key - Depress. Cursor will move to **OFFSET** field.
6. **OFFSET** - If applicable, insert value in nautical miles (-99 to +99 nautical mile range).
   a. If offset is prior to the waypoint - Enter range value and and a (-) will prefill as a default.
   b. If offset is beyond waypoint - Enter a (+) then range value.
7. **ENTER** key - Depress. Cursor moves to **FPA** field.
8. Flight path angle - Verify or insert (0.1 to 6.0 degree range).

NOTE

Direct flight path angle prefills if it is within the valid range.

9. **ENTER** key - Depress to accept waypoint entries and return to **VNAV** page 1.

(5) Creating VNAV profile waypoints. **VNAV** profile waypoints **(#TOC, #TOD,** and **#PRESL)** are used to provide a prediction of the position of the aircraft on the vertical flight path. These are non-enterable waypoints computed by the system based on current ground speed and vertical speed.

(a) *Top of* climb *(#TOC).* Top of climb altitude is obtained from either the **CRUISE ALT** entered by the pilot on the **VNAV DATA** page, or from the altitude preselector setting, if available. When the aircraft arrives at the pre-selected altitude, the system will automatically set cruise altitude to the preselected altitude which will provide a **#TOD** prediction.

If vertical climb constraints are programmed, **#TOC** will automatically appear as a waypoint when the aircraft laterally passes the last vertical waypoint that has a climb constraint. Once the aircraft has crossed the final climb constraint waypoint, **#TOC** will then become the vertical **TO** waypoint. If there are no vertical constraints programmed for climb, **#TOC** will be displayed as the first vertical waypoint as long as the aircraft is in a climb.

When the programmed cruise altitude is reached, **#TOC** is removed from the **VNAV** flight plan, and **#TOD** becomes the vertical **TO** waypoint.

(b) When #TOC is the TO waypoint. The pilot may obtain range and **ETE** to any altitude above the aircraft during a climb.

1. **VNAV** key - Depress to display **VNAV** page 1.
2. Line select key - Depress to display **VNAV** page 1.
3. Alternate altitude - Insert. This value may be above or below the altitude pre-select value, but must be above the current barometric altitude.
4. **ENTER** key - Depress and observe the change in **RANGE** and **ETE.**
5. Previous **#TOC** altitude setting - Return to.

(c) Top of descent (#TOD). The top of descent waypoint is the position where the aircraft will intercept the descent path at the cruise altitude. The system calculates the **#TOD** by establishing a valid descent reference waypoint, then uses either the **CRUISE ALT** entered by the pilot on the **VNAV DATA** page, or the altitude preselector setting, if available.

If no descent reference waypoint with crossing altitude is programmed, the system will use the arrival airport and elevation **(ARP** reference point, not a runway) to fix top of descent as long as an **AFIS** flight plan is not used.

One minute prior to arriving at **#TOD,** the system issues the **VNAV WPT ALERT** message and the discrete waypoint light will flash for IO seconds, then be steady.

NOTE

Changing **CRUISE ALT** on the **CDU** to a lower altitude should only be done after the aircraft has departed cruise altitude, or **#TOD** at the current cruise altitude will be lost.

(d) Preselected altitude intercept point (#PRESL). When the system has an input from an altitude preselector and the aircraft is flying toward this altitude, a profile waypoint (#PRESL) appears on the **VNAV page. #PRESL,** however, never becomes the vertical TO waypoint. When the preselector input is valid, **ETE** and **RANGE** to **#PRESL** can be found on the **VNAV DATA** page.

(e) Descent reference waypoints. Descent reference waypoints have a fixed altitude crossing (that is, cross at type altitude constraint). To create a descent reference waypoint, the pilot can program a flight path angle or a cross at altitude constraint.

If a programmed **FPA** violates a prior vertical constraint, the system reassigns the descent reference waypoint, using the default **FPA** from the **VNAV DATA** page.

v. Remote Tuning.

(1) Tuning communications radios. This procedure enables the pilot to keyboard tune the aircraft radios via the CDU.

1. **TUNE** key - Depress. The comm radio **TUNE** page will be displayed.
2. Line select key - Depress (if necessary) to position cursor over appropriate **PRESET** field.
3. Frequency - Insert.

NOTE

Trailing zeroes are not required.

4. **ENTER** key - Depress. **TRANSFER?** will automatically appear.
5. **ENTER** key - Depress. The entered **PRESET** frequency transfers to **ACTIVE** and displays for a few seconds before it goes to dashes. The new frequency also displays as the ACTIVE frequency on the appropriate comm control unit.

NOTE

(MAN) adjacent to active comm frequency indicates that the frequency has been entered using the comm control unit. No prompts are displayed when active comm frequency has been keyboard entered.

The **PRESET** frequency displayed on the control head is not necessarily the **PRESET** frequency displayed on the CDU. Each may be entered independently.

Depending on the system configuration the cursor can appear over the **PRESET** field for either **COMM 1** or **COMM 2.**

(2) *Tuning NAV radios by keyboard method if station identifier is used.*

1. **TUNE** key - Depress until **NAV TUNE** page is displayed.
2. Line select key - Depress to position cursor opposite the desired radio **(NAV 1** or **NAV 2).**
3. Station identifier - Insert or verify entry.
4. **ENTER** key - Depress. The new frequency is displayed immediately and is annunciated with **(KEY)** adjacent to the frequency field. If the identifier is not found immediately, the **IDENT** field will go to dashes until the station is located in the database. Once located, the identifier will be displayed and the **(KEY)** annunciation will shift to the identifier line.

NOTE

When the CDU keyboard is used to tune a navaid, the database will pair the frequency and identifier to the nearest usable navaid. Therefore, the identifier entered may not be the same as the identifier that is displayed. If the navaid is out of range, or a frequency conflict exists, dashes will be displayed in the **IDENT** field and the new frequency will be displayed.

5. Frequency - Verify that the **ACTIVE** frequency on the control head and CDU displays agree.

(3) Tuning NAV radios by keyboard method if station *frequency* is *used.*

1. **TUNE** key - Depress until navigation radio **TUNE** page 1 is displayed.
2. Line select key - Depress to position cursor over desired FREQ field.
3. Frequency - Insert or verify.

NOTE

Trailing zeroes are not required.

4. **ENTER** key - Depress.
5. Frequency - Verify that control head display is tuned to the desired frequency. When the station is located in

the database the identifier will be displayed and the **(KEY)** annunciation will shift to the identifier line.

6. **RANGE** and **BRG** - Check.

NOTE

(MAN) adjacent to the **FREQ** field indicates that the frequency has been entered manually from the **NAV** control head.

(4) *Tuning NAV radios by auto tune* method.

NOTE

DME hold, manual control unit tuning, keyboard tuning, or use of the **AUTO/MAN** switch will take the flight management system out of the auto tune mode.

Only NAV/DME radios may be placed in the **AUTO TUNE** mode.

1. **TUNE** key - Depress to display the navigation radio **TUNE** page.
2. Line select key - Depress to place cursor over **IDENT** or **FREQ** field in **NAV 1** or **2.**
3. **BACK** key - Depress. **AUTO?** is displayed in place of **(KEY)** or **(MAN).**
4. **ENTER** key - Depress to place system in **AUTO TUNE** mode. After a brief pause the CRT information will change to reflect the identifier chosen by the system.

NOTE

No prompt is displayed adjacent to the **IDENT** field when system is in **AUTO TUNE** mode.

5. **FREQ, RANGE,** and **BRG** - Check that the frequency of the control unit and CDU display agree and that range and bearing are reasonable.

(5) *Transponder and ADF keyboard tune.*

1. **TUNE** key - Depress to display the page with **XPDR** and **ADF.**
2. Line select key - Depress to position the cursor over the desired code or frequency field.
3. Code or frequency - Insert and verify new value.
4. **ENTER** key - Depress. **(MAN)** field will disappear indicating radios have been keyboard tuned. Verify that the code or frequency changes on CDU (frequency only will appear for a few seconds before going to dashes) and control head displays.

NOTE

(MAN) adjacent to **ADF** or **XPDR** indicates that the frequency or code has been entered manually from the control unit.

w. Planning Procedures.

(1) Fuel planning.

1. **PLAN** key - Depress to display FUEL **STATUS** page.

NOTE

REMAINING and **RESERVE** quantities are stored in non-volatile memory after system shutdown. Upon system turn-on, **VERIFY INPUTS** will be displayed and **REMAINING, RESERVE,** and **FLOW** values will flash.

2. Line select key - Depress to position cursor over **REMAINING** field.
3. Fuel quantity remaining - Verify or insert.
4. **ENTER** key - Depress.
5. Fuel reserve - Verify or insert.
6. **ENTER** key - Depress.
7. Fuel flow - Insert or verify.

NOTE

No fuel flow entry is required in the automatic fuel flow mode. All flashing fields must be verified or values inserted using the **ENTER** key, in order for **HOURS, RANGE,** and **NM/LB** fields to display information.

8. **ENTER** key - Depress. If a manual fuel flow is entered the **VERIFY INPUTS** message changes to **LAST INPUT** and sets the time at :00 minutes. **(MAN)** will be displayed adjacent to the **FLOW** field.

When the **LAST INPUT** field exceeds 15 minutes, the **REMAINING, RESERVE,** and **FLOW** fields blink indicating verification or update is required. **REMAINING, RESERVE,** and **FLOW** fields will blink. Verify input is required (repeat steps 2 through 7).

9. Data - Check. **HOURS** of fuel and **RANGE** are calculated to the **RESERVE** fuel, not zero (0) fuel, unless the **RESERVE** fuel is zero (0).

RANGE and **NM/LB** or **NM/KG** (specific range) are calculated based on current groundspeed. Dashes are displayed for these values until a valid groundspeed is acquired.

(a) Changing unit of measurement (LB or KG),

1. Line select key - Depress to position the cursor over the unit field **(LB** or **KG).**
2. **BACK** key - Depress. The field will display **LB?** or **KG?** to notify the pilot of the pending change.
3. **ENTER** key - Depress. The units field on the title line and specific range line will change. All fuel figures are recalculated to reflect the new units of measurement.

(2) Trip planning. The **TRIP PLAN** page provides the capability to calculate information for active or stored flight plans, **DIRECT TO** legs, or random legs without affecting the system's navigation functions.

1. **PLAN** key - Depress to display TRIP **PLAN** page.

NOTE

Initially the **TRIP PLAN** page will display the active flight plan (if present). The initial leg displayed will be **DIRECT TO** the current **TO** waypoint on the active flight plan or the first **TO** waypoint on the flight plan selected.

2. Line select key - Depress to position the cursor over the **TRIP PLAN** field.
3. Desired flight plan - Insert flight plan number or **A** for active flight plan.
4. **ENTER** key - Depress.

NOTE

If a flight plan number is left in the **TRIP PLAN** field and not returned to A, no updated active flight plan information will be displayed.

5. **FR** waypoint - Verify or insert as required. If **DIRECT** is displayed go to step 7.
6. **ENTER** key - Depress.
7. **TO** waypoint - Verify or insert as required.

NOTE

With **TRIP PLAN** A selected, the **TRIP PLAN** leg will automatically advance to display **DIRECT TO** the current **NAVIGATION** page TO waypoint each time the **TRIP PLAN** page is accessed.

8. **ENTER** key - Depress.
9. Groundspeed - Verify. Current aircraft groundspeed is displayed unless a manual entry is made. Enter manual groundspeed as follows:
   a. Line select key - Depress to position cursor over GS field.
   b. Groundspeed - Insert.
   c. **ENTER** key - Depress. (MAN) will appear adjacent to the GS field.

To return to automatic groundspeed:

   d. Line select key - Depress to position cursor over GS field.
   e. **BACK** key - Depress. **AUTO?** appears in the **GS** field to inform pilot of the pending change and current GS is displayed in the cursor.
   f. **ENTER** key - Depress.

10. Data - Check. When **DIRECT** is displayed all data except **DTK** is updated continuously. If data is not continuously updated, it will be recalculated each time:

The **TRIP PLAN** page is selected.

A **TRIP PLAN** is entered.

A leg change is made on the **TRIP PLAN** page. **ETE** and **FPL** time are recalculated whenever the groundspeed changes.

Leg or **GS** change is made on **FUEL PLAN** page.

NOTE

ETA@ the destination is displayed only when **DIRECT** legs are being viewed.

NOTE

If the **TRIP PLAN** page is being displayed during a leg change (on the **ACTIVE FLIGHT PLAN** page) the new **TO** waypoint is not displayed. Exit and return to the **TRIP PLAN** page to view the updated **TO** waypoint.

11. Remainder of flight plan - Review by positioning cursor over **TO** field and depress **ENTER** key twice to call up next leg. Depress **ENTER** key once for each subsequent leg. (Groundspeed should be updated if necessary.)

NOTE

Information between any desired waypoints can be reviewed by selecting the **TRIP PLAN** page and entering a **FROM** and **TO** waypoint accomplishing manual leg change or performing the present position direct procedures. If the **TO** waypoint is not on the selected flight plan, the flight plan number and origin/ destination fields will display dashes.

(a) Updating TRIP PLAN leg to the current TO waypoint with an active flight plan selected.

1. Line select key - Depress to position cursor over **TRIP PLAN** field.
2. Enter the letter **A** in the cursor field.
3. **ENTER** key - Depress twice to display information in the data fields.

NOTE

If an offset waypoint is in the **TO** field the **OFFSET WPT** will appear. The **ENTER** key must be depressed again.

The **TRIP PLAN** leg will display **DIRECT TO** the current **NAVIGATION** page **TO** waypoint.

Selecting another display page (other than **MSG** and **FUEL PLAN)** and returning to the **TRIP PLAN** page will also update the leg with **DIRECT TO** the current **NAVIGATION** page **TO** waypoint.

(3) Flight p/an fuel planning. The **FUEL PLAN** page provides the capability to calculate fuel consumption information for active or stored flight plans, **DIRECT TO** legs, or random legs without affecting any of the system's navigation functions.

The fuel plan number and origin and destination identifiers, **TO/FROM** leg and groundspeed value on this page will be identical to the **TRIP PLAN** page. Changing **GS** or the current leg on the **FUEL PLAN** page page also affects the **TRIP PLAN** page. Pilot initiated changes made to the **FLOW** field on the **FUEL STATUS** page are reflected on the **FUEL PLAN** page.

1. **PLAN** key - Depress to display **FUEL PLAN** page.

NOTE

Initially the **FUEL PLAN** will display the active flight plan (if selected). The initial leg displayed will be **DIRECT TO** the first **TO** waypoint.

2. Line select key - Depress to position the cursor over the **FUEL PLAN** field.
3. Desired flight plan - Insert flight plan number or **A** for active flight plan.
4. **ENTER** key - Depress.

NOTE

If a flight plan number is left in the fuel plan field and not returned to **A,** no updated active flight plan information will appear.

5. FR waypoint - Verify or insert as required. If **DIRECT** is displayed go to step 7.
6. **ENTER** key - Depress.
7. **TO** waypoint - Verify or insert as required.

NOTE

With **FUEL PLAN A** selected, the **FUEL PLAN** leg automatically advances to display **DIRECT TO** the **NAVIGATION** page **TO** waypoint each time the **FUEL PLAN** or **TRIP PLAN** page is accessed.

8. **ENTER** key - Depress.
9. Groundspeed - Verify. The current aircraft groundspeed is displayed unless a manual entry is made.
10. Manual groundspeed - **Enter** as follows:
    a. Line select key - Depress to position cursor over **GS** field.
    b. Groundspeed - Insert.
    c. **ENTER** key - Depress. **(MAN)** will appear adjacent to GS field.

11. Automatic groundspeed - Return to as follows:

    a. Line select key - Depress to position cursor over **GS** field.

    b. **BACK** key - Depress. **AUTO?** appears in the **GS** field to inform pilot of the pending change and current **GS** is displayed under the cursor.

    c. **ENTER** key - Depress.

12. Manual fuel flow - Enter as follows:

    a. Line select key - Depress to position cursor over **FLOW** field.

    b. Fuel flow - Insert.

    c. **ENTER** key - Depress. **(MAN)** will appear adjacent to the **FLOW** field.

13. Automatic fuel flow - Return to as follows:

    a. Line select key - Depress to position cursor over **FLOW** field.

    b. **BACK>tx. key - Depress to position cursor over FLOW** field to inform pilot of the pending change and current flow will will be displayed under the cursor.

    c. **ENTER** key - Depress.

14. Data - Check When **DIRECT** is displayed all data is continuously updated. If data is not continuously updated, it will be recalculated each time:

The **TRIP PLAN** page has changes in **FR/TO** leg or **GS.**

The **FUEL PLAN** page is selected.

Leg or **GS** change is made on the **FUEL PLAN** page. **LEG FUEL** and **FPL FUEL** are recalculated whenever the **FLOW** changes.

FUEL FLOW is changed on **FUEL STATUS** page.

NOTE

The **REM@** field only appears when a **DIRECT TO** leg is displayed.

15. Remainder of flight plan - Review by positioning cursor over **TO** field then depressing **ENTER** key twice to call up the next leg. (Groundspeed and/or fuel flow should be updated if necessary.)

NOTE

Information between any desired waypoints can be reviewed by selecting the **FUEL PLAN** page and entering a **FROM - TO** leg or by executing the present position direct procedures. If the **TO** waypoint is not on the selected flight plan, the flight plan number and origin/destination fields will display dashes.

With an active flight plan selected to update the **FUEL PLAN** leg to current **TO** waypoint:

a. Line select key - Depress to position cursor over **FUEL PLAN A** field.

b. Letter **A** - Enter in cursor field.

c. **ENTER** key - Depress twice to display information in data fields.

The **FUEL PLAN** leg displays **DIRECT TO** the current **NAVIGATION** page **TO** waypoint.

Selecting another display page (other than **MSG** and **TRIP PLAN)** and returning to **FUEL PLAN** page also updates the leg with **DIRECT TO** the current **NAVIGATION** page **TO** waypoint.

(4) Verifying or changing date and time.

(a) DATE. This field displays current date same as initialization page.

(b) GMT. This field displays current GMT same as initialization page.

NOTE

If necessary, both **DATE** and **GMT** can be corrected on this page.

GMT may be updated to **GPS** time by placing the cursor over the **GMT** data field and depressing **BACK** key. If **GPS** time is available, **GPS?** will appear under the cursor. Depress **ENTER** key to update **GMT** to **GPS** time.

(c) TAKEOFF. This field displays the **GMT** at weight off wheels.

(d) LAND. This field displays the **GMT** at weight on wheels.

NOTE

TAKEOFF and **LAND** may be based on groundspeed and/or **TAS** depending upon system configuration.

(e) FL/GHT T/ME. This field displays the elapsed flight time in hours and minutes.

(f) Verifying or changing aircraft weight parameters. This procedure allows the pilot to confirm or adjust basic operating weight, payload, or fuel to current on board data.

1. **PLAN** key - Depress to display **AIRCRAFT WEIGHT** page.

NOTE

BASIC OF WT, PAYLOAD, and **FUEL ON BOARD** fields will be blinking if update has not been entered after system power up.

FUEL USED will remain dashes until auto fuel flow is detected.

2. Line select key - Depress to place the cursor over flashing weight field.
3. **BASIC OP WT** - Verify or insert.
4. **ENTER** key - Depress.
5. **PAYLOAD** - Verify or insert.
6. **ENTER** key - Depress.
7. **FUEL ON BOARD** - Verify or insert.
8. **ENTER** key - Depress.

NOTE

VERIFY INPUTS field will disappear and a **GROSS WT** value will replace dashes, and weights will no longer blink.

VERIFY FUEL message will replace **VERIFY INPUTS** message when **MAN** fuel flow is being used and **FUEL ON BOARD** has not been verified or updated on **PLAN.**

All blinking weight fields must be verified or values inserted using the **ENTER** key, for **GROSS WT** field to display information.

(5) Special procedures. The following are various procedures that can be performed during navigation, when applicable.

(a) Pilot entered leg change.

1. **NAV** key - Depress to select *NAVIGATION* page. A pilot entered leg change may be accomplished on any **NAVIGATION** page with a **FR/TO** field. However, **NAVIGATION** page 1 is recommended to simplify a reasonability check of **DIS** and **DTK.**
2. Line select key - Depress to position cursor over the **FR** field.
3. **FR** waypoint identifier - Insert or verify.
4. **ENTER** key - Depress. If inserting a waypoint identifier not found in the active flight plan, or an offset waypoint, a waypoint page will appear. The following procedure should be performed if a waypoint page appears:
   a. Waypoint page coordinates - Verify database waypoint or insert pilot entered waypoint. To insert waypoint coordinates (cursor over **POS** field):
   b. Latitude - Insert **(N** or **S** first, then degrees, minutes and tenths of a minute).
   c. **ENTER** key - Depress.
   d. Longitude - Insert **(E** or **W** first, then degrees, minutes, and tenths of a minute).
   e. **ENTER** key - Depress.
5. If verifying current **FR** waypoint - Depress **ENTER** key and cursor box will expand to enclose both **FR** and **TO** waypoint identifiers, which will activate the **TO** field.
6. **TO** waypoint identifier - Insert or verify.
7. **ENTER** key - Depress. If a waypoint page appears:
   a. Waypoint page coordinates - Verify database waypoint or insert pilot entered waypoint. To insert waypoint coordinates (cursor over **POS** field):
   b. Latitude - Insert **(N** or **S** first, then degrees, minutes, and tenths of a minute).

c. **ENTER** key - Depress.

d. Longitude - Insert **(E** or **W** first, then degrees, minutes, and tenths of a minute).

e. **ENTER** key - Depress.

8. **DIS, DTK** - Check.

NOTE

The pilot entered leg change procedure inserts a fence indicated by (-----) on the **DIRECT TO** and **ACTIVE FPL** pages preventing auto leg change beyond the **TO** waypoint, if the **TO** waypoint was not on the original active flight plan the **MSG** light will illuminate and the **SYSTEM MESSAGE** page will display **NO AUTO LEG CHG,** however the AUTO field on **NAVIGATION** page 1 will continue to display **AUTO.**

(b) Preventing automatic leg changes. The auto leg change function allows the system to automatically sequence from waypoint to waypoint on the active flight plan. When the system is initialized it is in the automatic leg change mode unless changed by the pilot. The following procedure inhibits automatic leg changes.

1. **NAV** key - Depress to display **NAVIGATION** page 1.

2. Line select key - Depress to position cursor over **AUTO.**

3. **BACK** key - Depress. Cursor field will display **MAN?** to inform the pilot of the pending change.

4. **ENTER** key - Depress. The cursor will disappear and **MAN** will remain in the field confirming that leg changes must be made manually. **NO AUTO LEG CHG** message will appear on the **SYSTEM MESSAGES** page, however the **MSG** light will not illuminate.

(c) Returning fo automatic leg change mode.

1. **NAV** key - Depress to display **NAVIGATION** page 1.

2. Line select key - Depress to position cursor over **MAN.**

3. **BACK** key - Depress. The cursor will disappear and **AUTO** will remain in the field confirming return to the automatic leg change mode. **NO AUTO LEG CHG** message on the **SYSTEM MESSAGES** page disappears unless the current **TO** waypoint is the last waypoint on the active flight plan.

(6) External waypoint acceptance. Up to 99 external waypoints may be accepted from an interfaced radar or EFIS. When a waypoint is generated from this equipment, a **DIRECT TO** leg change is made to that waypoint. The generated waypoint will be designated **EX#01 to EX#99.**

As the external waypoint **(EX#)** is off the flight plan it will be separated from the active flight plan waypoint sequence and a **NO AUTO LEG CHG** message will appear on the **SYSTEM MESSAGES** page. The following procedure may be used to link the **EX#** waypoint into the flight plan sequence.

1. Direct to key - Depress. The display will show direct to the **EX#** waypoint with the complete active flight plan listed below.

2. Line select key - Depress to position the cursor over the waypoint to follow the **EX#** waypoint.

3. **EX#** waypoint identifier - Insert.

4. **ENTER** key - Depress.

NOTE

The **EX#** waypoint identifier will flash if an unassigned number is entered. **EX#** waypoint coordinates can only be assigned by an external source (radar or EFIS).

5. Waypoint page coordinates - Verify.

6. **ENTER** key - Depress.

7. Waypoint sequence - Verify.

8. **ENTER** key - Depress. CDU display will automatically advance to navigation page 1. **NO AUTO LEG CHG** message will be removed from the system messages page.

(7) Present position as a waypoint. A special waypoint location is reserved for storing present position coordinates as a waypoint. The identifier for this waypoint is inserted as **#1.** The identifier may be used as a parent identifier for an offset waypoint by adding an asterisk (*).

Waypoint #1 is redefined each time the **HOLD** key is depressed. An example of the application of waypoint #1 is to store the coordinates of a point overflown to which you may wish to return. This is accomplished by depressing the **HOLD** key directly over that desired point. In this case these coordinates would be stored under identifier #1 until either the **HOLD** key is depressed again, updating #1, or the system is shut down.

NOTE

Since waypoint #1 is frequently redefined, it is not retained in non-volatile memory and the identifier #1 cannot be entered on a stored flight plan. It does, however, use up one of the 999 available waypoints, as do **#OFF** and **EX** (external) waypoints.

(8) Navigation at extreme latitudes (north of 70°N or south of 60°S.

WARNING

The procedures listed in this section contain instructions for operation of the flight management system at specified latitudes beyond the autocomputed magnetic variation mode. In all cases the flight crew of any aircraft operating at these latitudes must consult the flight manual supplement in order to obtain satisfactory performance and accuracy.

(a) Manual magnetic variation entry.

1. **NAV** key - Depress to display until **NAVIGATION** page 3 is displayed.
2. Line select key - Depress to place cursor over the **VAR** field.
3. Local variation - Insert **(E** or **W** first).
4. **ENTER** key - Depress. **(MAN)** will be annunciated adjacent to the **VAR** field.

(b) Returning to automatic variation.

1. **NAV** key - Depress until **NAVIGATION** page 3 is displayed.
2. Line select key - Depress to place cursor over **VAR** field.
3. **BACK** key - Depress. **AUTO?** will be displayed to advise the pilot of the impending change.
4. **ENTER** key - Depress.

(9) True heading.

NOTE

This procedure must be accompanied by the input of true heading into the system.

1. **NAV** key - Depress until **NAVIGATION** page 3 appears.
2. Line select key - Depress to place cursor over the **VAR** field.
3. **E0** - Insert.
4. **ENTER** key - Depress.

NOTE

The variation is now **EO** and the system will be referenced to true north. There will be no **T** annunciation to **BRG, HDG,** and **TK.**

x. Loss of Power in Flight.

NOTE

This procedure should only be used in a remote area where navaids are unavailable and there is reason to believe that the sensors contributing to the composite position may be in error.

This procedure allows the pilot to initialize enroute when the aircraft has sustained a loss of power for more than 7 seconds. The power off waypoint **(#OFF)** provides a snapshot of system data at the moment power was lost.

(1) Initialization when power is restored.

NOTE

When power returns, system will perform self test and will display the initialization page.

1. **DATE** and **GMT** - Verify or enter current **DATE** and **GMT** if required.
2. **ENTER** key - Depress to place the cursor over the **POS** field, if required.

NOTE

The coordinates are a rolling display of the real time blended position of the sensors being updated.

3. **ENTER** key - Depress to accept real time position.
4. **HOLD** key - Depress.

5. Power off waypoint identifier - Insert **#OFF.**
6. **ENTER** key - Depress.
7. **MINUTES, LAST TK, LAST GS** - Verify and record for future use.
8. **BACK** key - Depress to return to **HOLD** page.

NOTE

An offset waypoint **(#OFF*)** can be input with a radial based on the **LAST TK** value and distance calculated from the **LAST GS** value as well as the time elapsed from power off, provided significant changes to aircraft track or groundspeed have not been made. If the aircraft has turned or if the speed has changed, the pilot should estimate the track and distance traveled since loss of power.

9. Offset waypoint identifier - Insert.
10. **ENTER** key - Depress.
11. Recorded or estimated radial - Insert **LAST TK** value or averaged value.
12. Recorded or estimated radial - Insert **LAST TK** value or averaged value.
13. Distance - Insert calculated distance in nautical miles and tenths of a nautical mile.
14. **ENTER** key - Depress.
15. Waypoint coordinates - Verify for reasonability.
16. **ENTER** key - Depress.
17. **DIF** - Check.
    a. If update is desired: **ENTER** key - Depress.
    b. If update is not desired: **NAV, PLAN, FPL, TUNE, VNAV, HDG,** or direct to key - Depress to cancel the **HOLD.**

y. Creating/Changing Pilot Entered (Personaized) Waypoints. A personalized waypoint may be created by entering a non-ICAO waypoint identifier and inserting the desired position coordinates on the waypoint page.

The CDU has non-volatile storage for up to 999 waypoints which are retained in memory only if entered on a stored flight plan. The ICAO identifiers stored in the database cannot be used for personalized waypoints.

Select the desired flight plan and position the cursor over the desired field. If necessary, refer to the procedure for creating a flight plan or modifying a flight plan.

(1) Creating pilot entered (personalized) waypoints.

1. Personalized identifier - Insert.
2. **ENTER** key - Depress.
3. Latitude - Insert (N or S first, then degrees, minutes, and tenths of a minute),
4. **ENTER** key - Depress.
5. Longitude - Insert (E or W first, then degrees, minutes, and tenths of a minute).
6. **ENTER** key - Depress.

(2) Changing pilot entered (personalized) waypoints.

1. Personalized identifier - Insert.
2. **ENTER** key - Depress. **PILOT ENTERED WPT** page will appear.
3. Line select key - Depress to position the cursor over **POS** field.
4. Steps 4 through 6 - Repeat.

NOTE

If an offset waypoint from a pilot entered waypoint is programmed, the **RAD** and **DIS** can be changed, but the coordinates cannot be manually inserted.

(3) Creating an offset waypoint. This procedure enables the system to create a waypoint at a given radial and distance from a known point. The known point (parent waypoint) may be any stored personalized or database waypoint.

An offset waypoint may be inserted in any waypoint identfield. The offset waypoint is retained in memory after system shutdown only if entered on a stored flight plan.

1. Cursor - Position over the desired waypoint **IDENT** field.

NOTE

The offset waypoint uses station declination, if available, or it uses the calculated magnetic variation of the parent waypoint. All points defined by a VHF navaid in the national/international airspace system are based on the VHF navaid station declination. Since the magnetic variation and station declination may not be the same at a given navaid, the calculated position and the defined position may differ.

2. Parent waypoint identifier - Insert with an * following the entry.

NOTE

More than one offset waypoint is allowed from one parent, using * , *l, *A1, etc., as identifying notation.

3. **ENTER** key - Depress.

NOTE

If field blinks, parent waypoint does not exist in CDU memory or in database and must be defined on a flight plan page.

4. Desired radial - Insert.
5. **ENTER** key - Depress.
6. Desired distance - Insert (nautical miles and tenths of a nautical mile, 399.9 maximum).
7. **ENTER** key - Depress.
8. **POS** coordinates - Verify for reasonability.
9. **ENTER** key - Depress.

NOTE

An offset waypoint is used in the same manner as any other waypoint.

z. Database Update Procedures.

1. Aircraft power - Apply.
2. Current database update card - Insert into CDU.
3. **ON** key - Depress to turn on system.

To update:

CAUTION

If an interruption of the update process is desired, remove the update disk. Do not turn off the power to stop the update.

a. **1** key - Depress to select **BEGIN UPDATE,** if required. If update is not desired, depress the **2** key to restart the system.

b. **ENTER** key - Depress. The updating data base page appears indicating database memory initialization.

After initialization, the message **COMPLETE** and the changing update percentage appear indicating that the update is in progress.

If update is successful:

c. **ENTER** key - Depress to restart navigation or turn system off.

If the database update fails, the error message **FAILED** will be displayed. Depress the 1 key to retry the update or use the following procedure.

NOTE

Sometimes when a retry is initiated, a display such as **CHECKING FOR DATA BASE CARD** may appear momentarily.

4. Update card - Remove.
5. System - Turn **OFF.**
6. Update card - Re-insert into CDU.
7. System - Turn **ON** and retry update using update procedure.

If the update card is the wrong type (that is, wrong database type) the message **CARD INVALID** will be displayed. Depress the **1** key to retry update or use the following procedure:

a. Update card - Remove.

b. System - Turn **OFF.**

c. Update card - Verify and re-insert into CDU.

d. System - Turn **ON** and retry update using update procedure.

Section IV. RADAR AND TRANSPONDER

3-30. RADAR AND TRANSPONDER EQUIPMENT GROUP DESCRIPTION.

The radar and transponder group consists of a weather radar, lightning sensor system, and transponder. The transponder and radar group includes an identification, position, emergency tracking system, and a radar and lightning sensor system to locate potentially dangerous weather areas.

3-31. WEATHER RADAR SYSTEM (RDS 84VP).

The weather radar system is a light weight, X-band digital radar with alphanumerics designed for weather detection and analysis and ground mapping. The radar system is controlled from the radar control panel (fig. 3-77), located on the pedestal extension (fig. 2-12). Radar information is displayed on the pilot's and copilot's electronic horizontal situation indicator (EHSI) and on the multifunction display (MFD) (fig. 3-78).

The primary purpose of the system is to detect storms along the flight path and give the pilot a color visual indication of their rainfall intensity. After proper evaluation, the pilot can chart a course to avoid these storm areas.

Figure 3-74 depicts a typical EFIS weather test pattern (120 degree scan).

WARNING

The system performs only the functions of weather detection or ground mapping. It should not be used nor relied upon for proximity warning or anti-collision protection.

Do not turn the radar on within 15 feet of containers of flammable or explosive material.

The system always transmits in the **ON** mode. It does not transmit in the **OFF, SBY,** or **TST** modes but it does transmit in the **NAV MAP** mode.

Do not operate during refueling of aircraft or defueling operation within 100 feet (30 meters).

Do not operate if personnel are standing too close to the 240-degree forward sector of the aircraft (fig. 3-80).

Operating personnel should be familiar with FAA AC 20-68B.

In the weather detection mode, precipitation intensity levels are displayed in four colors, contrasted against a deep black background. Areas of very heavy rainfall will appear in magenta, heavy rainfall in red, less severe in yellow, light rain in green, and little or no rainfall in black (background). The correlation of precipitation intensity and the color of displayed weather is shown in table 3-3.

Range marks with identifying numerics, displayed in white, are provided to facilitate evaluation of storm cells.

Selection of the ground mapping **(GMAP)** function will cause system parameters to be optimized to improve resolution and enhance identification of small targets at short range. The reflected signal from ground surfaces will be displayed as magenta, yellow, or cyan (most to least reflective).

a. Radar Control Panel Controls, Indicators, and Functions:

(1) Radar mode selector switch. The radar mode selector knob, placarded **OFF - STBY - TST - ON,** is used to select the operating condition of the radar system.

(a) OFF. The **OFF** position disables the **ART** (antenna, receiver, and transmitter) power supply. **OFF** is displayed below the **NAV** source annunciator on the radar mode line.

(b) STBY. After 30 seconds in the standby **(STBY)** mode the system is in a state of readiness. No radar transmission occurs, and the antenna is parked in the down position. **STBY is** displayed below the **NAV** source annunciator on the radar mode line, if a weather mode is selected.

(c) TST. Selecting the test **(TST)** position causes the test pattern to be displayed on the indicator, if a weather mode is selected. **TEST** will be displayed below the **NAV** source annunciator on the radar mode line.

(d) ON. Selecting **ON** selects the condition of normal operation, allowing for weather detection or other modes of operation. Depending on the selected mode of operation, **Wx, WxA,** or **MAP** will be displayed below the **NAV** source annunciator on the radar mode line.

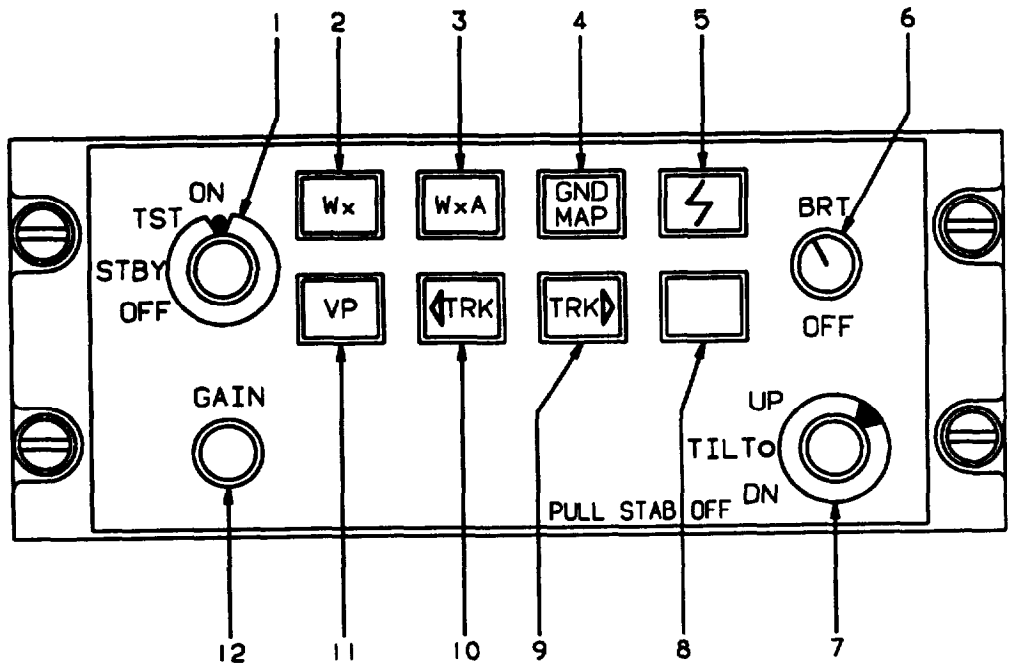

1. Radar Mode Selector Switch
2. Weather Pushbutton Mode Selector Switch
3. Weather Alert Pushbutton Mode Selector Switch
4. Ground Map Pushbutton Mode Selector Switch
5. Lightning Display Pushbutton Mode Selector Switch
6. Display Brightness Control
7. Tilt/Stabilization Control
8. Not Used
9. Right Track Control
10. Left Track Control
11. Vertical Profile Pushbutton Mode Selector Switch
12. Gain Control

A958W03C0381 C

Figure 3-78. Weather Radar Control Panel

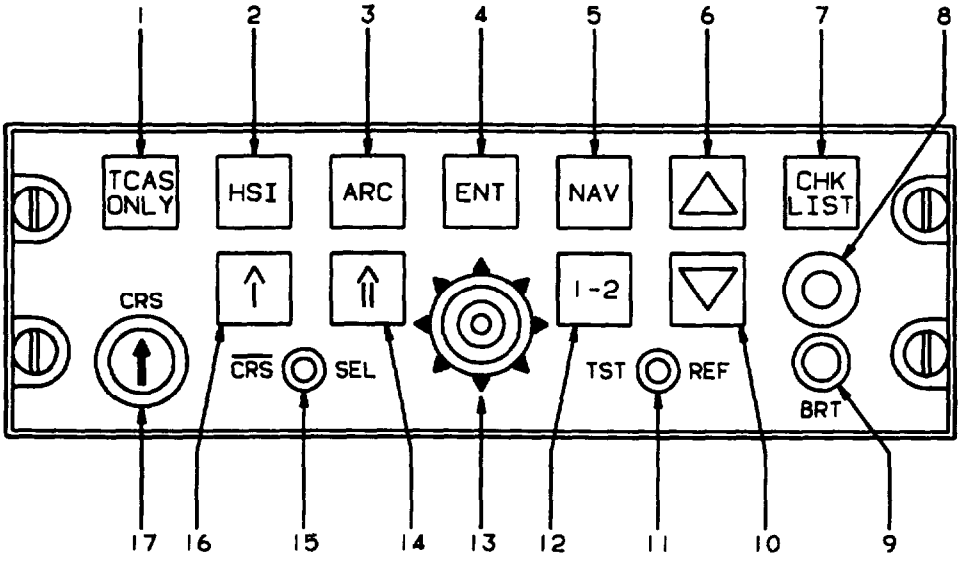

1. TCAS ONLY Pushbutton Mode Selector Switch
2. HSI 360 Degree Pushbutton Mode Selector Switch
3. HSI ARC Pushbutton Mode Selector Switch
4. Enter Switch
5. Navigation Pushbutton Selector Switch
6. Range Up Switch
7. Checklist Pushbutton Switch
8. Data Input Jack
9. Brightness Control
10. Range Down Control
11. System/Reference Button Test Switch
12. Primary Navigation Sensor System Pushbutton Selector Switch
13. Joystick
14. HSI Double Needle Bearing Pointer Source Pushbutton Selector Switch
15. HSI Course Select Knob Activation Pushbutton Switch
16. HSI Single Needle Bearing Pointer Source Pushbutton Selector Switch
17. HSI Course Select Knob

A95BW03C0380 C

Figure 3-79. Multi-Function Display Control Unit

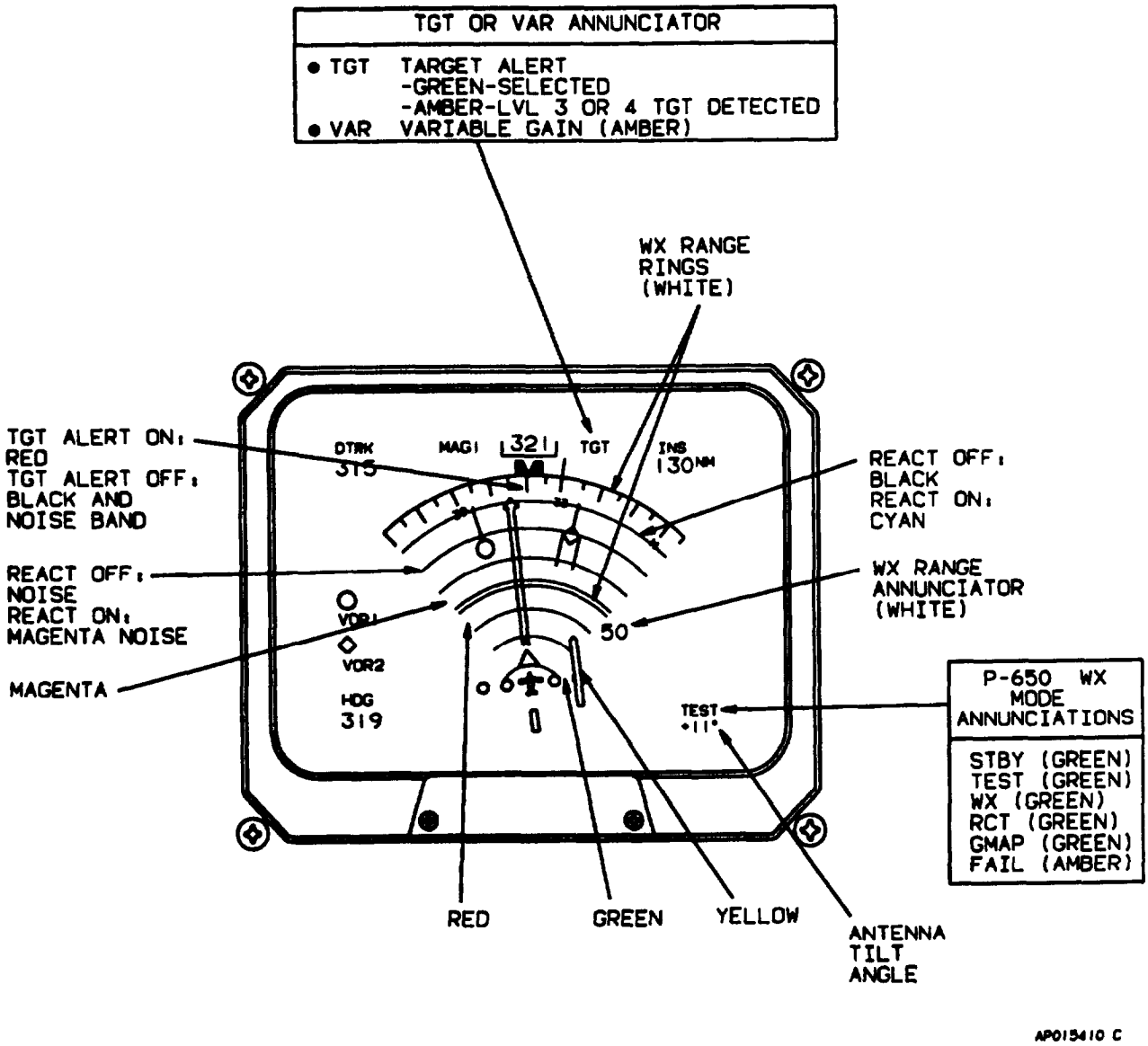

Figure 3-80. EFIS Weather Test Pattern (Typical 120-Degree Scan)

Table 3-12. Video integrated Processor VS Aircraft Radar Return Levels

Display Level	Rainfall Rate (mm/Hr)	Rainfall Rate (inches/Hr)	Video Integrated Processor (VIP) Categorizations			Maximum Calibrated Range (NM)
			Storm Category	VIP Level	Rainfall Rate (mm/Hr) (Inches/Hr)	
4 (Magenta)	Greater than 52	Greater than 2.1	Extreme	6	Greater than 125 (5)	175
			Intense	5	50-125 (2-5)	
3 (Red)	Greater than 12 12-52	Greater than 0.5 0.5-2.1	Very Strong	4	25-50 (1-2)	175
			Strong	3	12-25 (0.5-1)	
2 (Yellow)	4-12	0.17-0.5	Moderate	2	2.5-12 (0.1-0.5)	175
1 (Green)	1-4	0.04-0.17	Weak	1	0.25-2.5 (0.01-0.1)	175
0 (Black)	Less than 1	Less than 0.04				—

BT03849

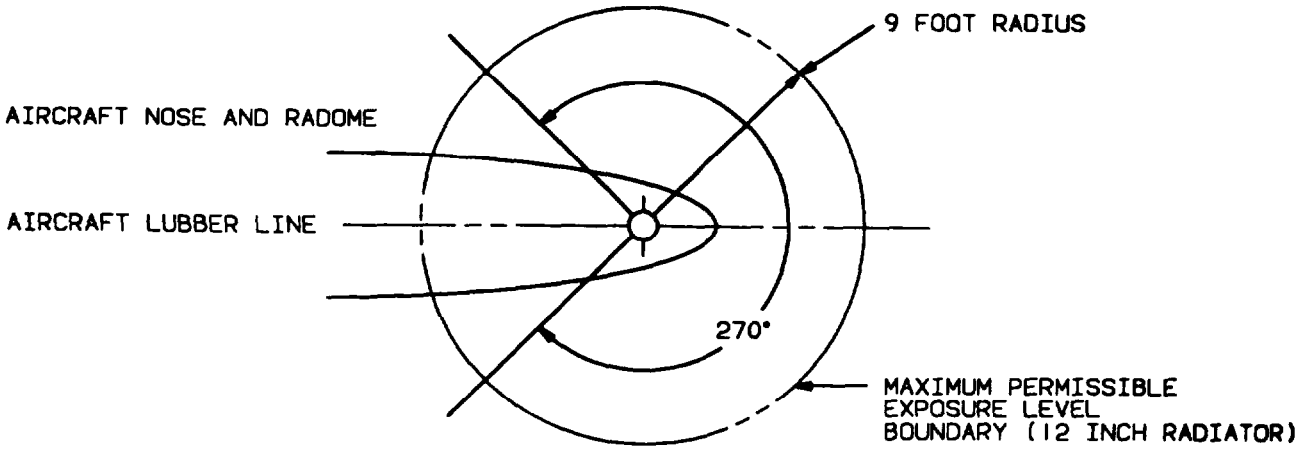

AP015276 C

Figure 3-81. Maximum Permissible Exposure Level

NOTE

If **ON** is selected, the radar antenna, receiver, and transmitter **(ART)** is operational. However, if a weather radar mode is not selected for display, the **ART** will be placed in standby by the EFIS.

(2) Weather pushbutton mode selector switch. The weather pushbutton mode selector switch, placarded **Wx** is used to select the weather mode **(Wx)** when depressed. **Wx** will be displayed below the **NAV** source annunciator on the radar mode line, if a weather mode is selected.

(3) Weather alert pushbutton mode selector switch. The weather alert pushbutton mode selector switch, placarded **WxA,** is used to select the weather alert mode **(WxA)** when depressed. **WxA** will be displayed below the **NAV** source annunciator on the radar mode line, if a weather mode is selected.

(4) Ground map pushbutton mode selector switch. The ground map pushbutton mode selector switch, placarded **GND MAP,** is used to select the ground map ping mode when depressed. **MAP** will be displayed below the **NAV** source annunciator on the radar mode line. The color magenta is not active in the ground mapping mode.

(5) Lightning display pushbutton mode selector switch. The lightning pushbutton mode selector switch, placarded with a lightning bolt, is used to enable the lightning display when depressed, if a weather mode is selected for display.

(6) Display brightness control. The display brightness control, placarded **BRT - OFF,** is used to adjust display brightness.

(7) Tilt/stabilization control. The tilt/stabilization control, placarded **TILT - UP - DN, PULL STAB OFF,** permits manual adjustment of antenna tilt (15 degrees up or down) to enable the pilot to analyze the weather presentation. The tilt angle is displayed below the **NAV** source annunciator on the radar tilt annunciator line.

Pulling out on the tilt selector knob will turn radar stabilization off. **STAB OFF** will appear on the radar fault/warning line displayed below the **NAV** source annunciator just under the antenna tilt annunciation line.

(8) Right and left track controls. If the weather only mode is selected, depressing the **TRK** switch activates and slews a yellow dashed azimuth line. It also activates a digital display showing the number of degrees the azimuth line is located left or right from the nose of the aircraft. In any other map weather presentation, only the yellow dashed line will be displayed.

(a) Track control operation in vertical *profile mode.* Prior to engaging **VP,** the appropriate button (left or right) is used to place the track line at the desired azimuth angle to be vertically scanned (sliced). When **VP** is engaged, the slice will be taken at the last position of the track line, whether it is visible or not. If the track line has not been selected after power has been applied to the system and **VP** is engaged, the slice will be taken at 0 degrees (directly in front of the aircraft).

When in **VP** mode, depressing the **TRK** switch will change the selected azimuth two degrees left or right, depending upon which button is depressed. Continuously holding the **TRK** button will result in the system slicing in two degree increments.

(9) Vertical profile pushbutton mode selector switch. Once the desired azimuth has been selected with the **TRK** switch, depressing the vertical profile pushbutton mode selector switch, placarded **VP,** selects the vertical profile mode of operation, and causes the vertical profile screen to appear. The weather mode of operation **(Wx, WxA,** or **GND MAP)** displayed in the lower left comer of the display will be the same as existed just prior to selecting **VP.** To select a different weather mode once in vertical profile, select the desired mode **(Wx, WxA,** or **GND MAP)** by depressing the appropriate pushbutton switch.

The operation of scanning the antenna vertically is referred to as taking a vertical slice.

Once vertical profile has been selected, the desired profile azimuth angle may be changed in two degree increments by depressing and holding the appropriate **TRK** switch. If the radar antenna is already profiling, the antenna will move in two-degree increments slicing in the direction determined by the **TRK** switch, or a **WAIT** annunciation will be displayed indicating that the radar antenna will perform the desired slicing function as soon as the antenna returns to the last selected profiling azimuth angle.

To terminate the vertical profile mode and return to the normal mode (horizontal scan), depress the **VP** pushbutton switch. The radar system will retain its existing weather mode and return to horizontal scanning. A track line will be present on the screen for 15 seconds to indicate the location of the last profiling azimuth angle.

(10) Gain control. The manual gain control knob becomes active when ground mapping mode **(GND MAP)** is selected. In all other modes, gain is internally set.

b. Weather Radar Normal Operation. Radar turn-on procedure.

1. Radar mode selector switch - **TST.**

2. **TILT** /stabilization control - UP 7 degrees (as shown on tilt indicator on display). Check for correct test pattern.

3. Radar mode selector switch - **TST** or **STBY.** Taxi to a clear area where there are no people, aircraft, vehicles, or metallic buildings within approximately 100 yards.

4. Radar mode selector switch - **ON. Wx** mode will be displayed in the 80 mile range. Any targets (weather or ground) will be displayed in green, yellow, red, or magenta.

5. Range switches (EFIS control panel) - Select 40 miles as maximum range.

6. **WxA** pushbutton mode selector switch - Depress and observe that the magenta areas (if any) are flashing.

7. **TILT** control - Vary manually between **UP** 15 degrees and **DN** 15 degrees and observe that close-in ground clutter appears at lower settings and that any local rain appears at higher setting.

8. Radar mode selector switch - **TST** or **STBY** before taxi.

c. Weather Display Calibration. The radar display has been calibrated to show five levels of target intensity as shown in table 3-3. This table shows the approximate relationship of aircraft weather radar levels to the video integrated processor (VIP) levels used by the National Weather Service. These levels are valid only when:

Wx or **WxA** mode is selected.

Displayed returns are within the **STC** range of the radar (approximately 40 miles).

The returns are beam filling.

There are no intervening radar returns.

d. Tilt Management. Effective antenna tilt management is the single-most important key for more informative weather radar displays. Three prime factors must be kept in mind for proper tilt management:

The earth's curvature must be considered in determining the location of the beam at long distances.

The center of the radar beam is referenced to the horizon by the aircraft's vertical reference system.

Adjusting the antenna tilt control will cause the center of the radar beam to scan above or below the plane of the attitude reference system.

A tilt setting that is too low will result in excessive ground or sea return while a setting that is too high can result in the radar beam passing above a weather target.

For detecting weather targets at long ranges and to allow adequate time for planning the proper avoidance path, the tilt angle should be set for a sprinkle of ground target returns on the display. By slowly raising the tilt angle, weather targets will emerge from the ground returns because of their height above the ground. In order to minimize ground returns when closely examining weather targets below the aircraft flight level, select the shortest range that allows full depiction of the area of interest.

e. En Route Weather Detection Operation. To set the antenna tilt to optimize the radar's ability to identify significant weather follow these steps:

1. **Wx** pushbutton mode selector switch - Depress.

2. Range switches - Select 40 or 80 nautical mile range.

3. **TILT** control - Adjust down until entire display is filled with ground returns.

4. **TILT** control - Slowly raise antenna so that ground returns are pointed on about the outer one third of the indicator area.

5. Display - Watch strongest returns. If, as they are approached, they become weaker or fade out after working back inside the near limit of the general ground return pattern, they are probably ground returns or insignificant weather. If they continue strong after working down into the lower half of the indicator, you are approaching a hazardous storm or storms and should deviate.

6. Display - Examine the area behind strong targets. If radar shadows are detected you are approaching a hazardous storm or storms and should deviate. Regardless of the aircraft's altitude, if weather is being detected, move the antenna tilt control up and down in small increments until the return object is optimized. At that angle, the most active vertical level of the storm is being displayed.

(1) Ground mapping mode. Ground mapping mode is selected by depressing the **GND MAP** pushbutton mode selector switch. The **TILT** control is then used to tilt the antenna down until the desired amount of terrain is displayed. The degree of tiltdown will depend upon the aircraft altitude and the selected range.

f. Fault monitoring. Critical functions in the receiver/transmitter/antenna are continuously monitored.

3-32. LIGHTNING DETECTION SYSTEM (WX-1000E).

WARNING

The lightning detection system is to be used for hazardous weather avoidance, not weather penetration.

The lightning detection system is used to detect and locate areas of lightning activity within a 100 nautical mile radius around the aircraft. The system provides the operator with a visual display of the position and rate of occurrence of the lightning activity on the EHSI. The lightning detection system detects both visible and high energy invisible electromagnetic and electrostatic discharges (lightning) indicating areas of turbulent activity. After evaluating the lightning display, and its relation to precipitation as indicated by the weather radar display, the operator can effectively plan the proper course to avoid hazardous weather. The lightning detection system consists of a receiver/processor, an antenna, a mode selector pushbutton switch (located on the radar control panel), a control switch (located on the audio control panel), the pilot's and copilot's EHSI, and the multifunction display (MFD). The system is powered by a 2-ampere circuit breaker, placarded **STORMSCOPE,** located on the right sidewall circuit breaker panel (fig. 2-7). Because the system is a passive device (it does not transmit), it can be operated safely on the ground. Weather in all directions around the aircraft may be monitored, even before starting engines.

a. Lightning Detection System Controls and Functions.

(1) Lightning detection system control switch. The lightning detection system control switch, placarded **STORMSCOPE, OFF - ON - CLEAR,** located on the audio control panel, controls operation of the lightning detection system. The **OFF** and **ON** positions remove and apply power to the system. The **CLEAR** position is a momentary position that clears all thunderstorm information from the display.

(2) Lightning display pushbutton mode selector switch. The lightning display pushbutton mode selector switch, placarded with a lightning bolt, is located on the radar control panel. Depressing this switch selects or deselects lightning information for display on the EFIS or MFD.

3-33. GROUND PROXIMITY ALTITUDE ADVISORY SYSTEM (GPAAS).

WARNING

The ground proximity altitude advisory will provide little, if any, warning for flight into precipitous terrain approaching a sheer wall if there is little gradually rising terrain before reaching the steep terrain.

a. Description. The ground proximity altitude advisory system (GPAAS) is provided to aid the flight crew in terrain avoidance.

The GPAAS is a completely automatic system (requiring no input from the crew) which continuously monitors the aircraft's flight path at altitudes of between 100 and 2000 feet above ground level (AGL).

The GPAAS computer processes the data and, when conditions warrant, selects the appropriate digitized voice advisory/warning message from its memory. This message is then announced over the pilot's and copilot's audio systems. If the condition is not corrected, the GPAAS will rearm, and will again announce and repeat the warning if the condition recurs. The GPAAS computer remains ready to announce a different message during the intervals between repetitions. All messages are disabled below 100 feet AGL. The GPAAS system receives 28 VDC power through a l-ampere circuit breaker, placarded **GPAAS POWER,** located on the right sidewall circuit breaker panel (fig. 2-7).

(1) GPAAS switch-indicator lights. A switch-indicator is located on the audio control panel (fig. 3-1). The upper half of the switch-indicator (yellow) is placarded **VOICE OFF. The** lower half is an indicator (red) only and is placarded **VA FAIL.**

Depressing the upper **(VOICE OFF)** switch-indicator disables the GPAAS advisory, and illuminates the **VOICE OFF** indicator light.

The **VA FAIL** annunciator light (red) will illuminate when the GPAAS fails.

(2) GPAAS volume control. A GPAAS volume control placarded **VOL,** located on the audio control panel (fig. 3-1), controls the audio volume of the GPAAS advisory/warning messages down to a certain minimum level.

(3) GPAAS aural warning indications. The following is a list of aural indications. Due to the possibility of activating more than one condition at a time, a warning priority has been established. The highest priority message will be announced first. If a higher priority item is

received after a message is started, voice annunciation of the higher priority message shall be announced after a lower priority message in progress at the end of the message segment. It will not stop in the middle of a word. On messages that are repeated three times at four second intervals, the priority list will be scanned for higher priority messages and will insert them in the interval between the messages. The messages provided by the system are listed in descending order of priority as follows:

1. "TWO THOUSAND" at 2000 feet AGL.
2. "ONE THOUSAND" at 1000 feet AGL.
3. "NINE HUNDRED" at 900 feet AGL.
4. "EIGHT HUNDRED" at 800 feet AGL.
5. "SEVEN HUNDRED" at 700 feet AGL.
6. "SIX HUNDRED" at 600 feet AGL.
7. "FIVE HUNDRED" at 500 feet AGL.
8. "CHECK GEAR" will be announced immediately after 500 foot announcement if gear is not down.
9. "FOUR HUNDRED" at 400 feet AGL.
10. "CHECK GEAR" will be announced immediately after 400 foot announcement if gear is not down.
11. "THREE HUNDRED" at 300 feet AGL.
12. "CHECK GEAR" will be announced immediately after 300 foot announcement if gear is not down.
13. "TWO HUNDRED" at 200 feet AGL.
14. "CHECK GEAR" will be announced immediately after 200 foot announcement if gear is not down.
15. "ONE HUNDRED" at 100 feet AGL.
16. "CHECK GEAR" will be announced immediately after 100 foot announcement if gear is not down.
17. "MINIMUM, MINIMUM" at decision height.
18. "LOCALIZER" at 1.3 to 1.5 dots either side of center beam. Will be repeated three times at four second intervals.
19. "GLIDESLOPE" at 1.3 to 1.5 dots above or below center of beam. Will be repeated three times at four second intervals.
20. "ALTITUDE, ALTITUDE" at excessive deviation from altitude selected on the altitude alerter.
21. "CHECK TRIM" when trim failure has occurred. Will be repeated three times at four second intervals.
22. "AUTOPILOT" when autopilot has disconnected.

b. Normal Operation.

(1) Turn-on procedure. The GPAAS is operable when the following conditions have been met:

1. **BAIT** switch - **ON.**
2. **AVIONICS MASTER PWR** switch - **ON.**
3. **GPAAS** POWER circuit breaker - Set.
4. **RADIO ALTM** circuit breaker - Set.
5. **VA FAIL** annunciator light - Extinguished.

(2) GPAAS ground check.

1. GPAAS voice advisory **VOL** control - Full clockwise.
2. **VOICE OFF** switch-indicator - Extinguished.
3. Audio control panel - Set listening audio level.
4. **VA FAIL** annunciator light - Extinguished.
5. **DH** set knob - Set decision height to 200 feet on EADI.
6. **RALT TEST** switch - Depress. Minimum, minimum" will be annunciated once followed by the illumination of the **VA FAIL** light.

c. GPAAS Modes of Operation. The GPAAS operates in the following modes of operation:

(1) Aural "TWO THOUSAND" advisory *(mode 1).* The aural advisory "TWO THOUSAND" indicates that the aircraft is at a radio altitude of 2000 feet above ground level. This advisory is cancelled when valid

information from the radio altimeter is lost, during climb, or whenever the aircraft is out of the operating altitude range of the radio altimeter.

(2) Hundred foot increment aural altitude advisories (mode 2). The aural advisories "ONE THOUSAND, NINE HUNDRED, EIGHT HUNDRED, SEVEN HUNDRED, SIX HUNDRED, FOUR HUNDRED, THREE HUNDRED, TWO HUNDRED, ONE HUNDRED" indicate that the aircraft is at the associated radio altitude in feet above ground level. This advisory is cancelled when valid information from the radio altimeter is lost, during climb, or whenever the aircraft is out of the operating altitude range of the radio altimeter.

(3) Aural "LOCALIZER" advisory (mode 3). The aural advisory "LOCALIZER" indicates that the aircraft has deviated from the center of the localizer beam in excess of 1.3 to 1.5 dots. The localizer advisory is armed when a valid localizer signal is detected and the aircraft is below 1000 feet above ground level. It will be repeated no more than three times at 4 second intervals unless the aircraft is returned to less than 1.3 to 1.5 dots from the center of the localizer course. The localizer advisory is disabled when a valid localizer signal has been lost, during climb, below the decision height set on the radio altimeter, or if the navigation receiver is not tuned to a localizer frequency.

(4) Aural "CHECK GEAR advisory (mode 4). The aural advisory "CHECK GEAR" indicates that the aircraft has descended to 500 feet AGL and the landing gear is not down. This advisory is repeated once at 100 feet intervals down to 100 feet AGL.

(5) Aural "GLIDESLOPE" advisory (mode 5). The aural advisory "GLIDESLOPE" indicates that the aircraft has exceeded 1.3 to 1.5 dots above or below the center of the glideslope beam. The glideslope advisory is armed when a valid glideslope signal is detected and the aircraft is below 1000 feet AGL. It will be repeated no more than three times at 4 second intervals unless the aircraft is returned to less than 1.3 to 1.5 dots from the center of the beam. The glideslope advisory is disabled upon loss of a valid glideslope signal, during climb, on a localizer back course, below the decision height set on the radio altimeter or, if the navigation receiver is not tuned to a localizer frequency. This advisory is inhibited by the weight on wheels strut switch.

(6) Aural advisory "MINIMUM, MINIMUM' (mode 6). The aural advisory MINIMUM, MINIMUM indicates that the aircraft is at the radio altitude selected by the crew with the radio altimeter DH set knob located, on the EFIS control panel. This advisory is cancelled when valid information from the radio altimeter is lost, during climb, whenever the aircraft is above 1000 feet AGL, or whenever the aircraft is out of the operating altitude range of the radio altimeter.

(7') Aural "ALTITUDE, ALTITUDE" advisory (mode 7). The aural advisory "ALTITUDE, ALTITUDE" indicates the approach to a preselected altitude as the aircraft reaches a point 1000 feet from the selected altitude or, after reaching the selected altitude, when the aircraft deviates more than 250 feet from the selected altitude.

(8) Aural "CHECK TRIM, CHECK TRIM, CHECK TRIM" advisory. The aural advisory "CHECK TRIM, CHECK TRIM, CHECK TRIM" indicates that the autopilot has had a trim failure.

(9) Aural "AUTOPILOT" advisory. The aural advisory "AUTOPILOT" indicates that the autopilot has disengaged.

d, Emergency procedures. If an emergency or malfunction makes it necessary to disable the GPAAS, pull the **GPAAS POWER** circuit breaker, located on the right sidewall circuit breaker panel (fig. 2-7). GPAAS audio may be turned off by depressing the **VOICE OFF** switch.

3-34. TRANSPONDER (APX-100).

a. Description. The transponder system receives, decodes, and responds to interrogations from air traffic control (ATC) radar to allow aircraft identification, altitude reporting, position tracking, and emergency tracking. The system receives on a frequency of 1030 MHz and transmits preset coded reply pulses on a frequency of 1090 MHz at a minimum peak power of 200 watts. The range of the system is limited to line-of-sight. The transponder system consists of a combined receiver/transmitter/control panel (fig. 3-81) located in the pedestal extension; a pair of remote switches, one in each control wheel; and two antennas, located on the underside and top of the fuselage. The system is protected by the 3-ampere **TRANSPONDER** and the 30-ampere **AVIONICS NO. 1** circuit breakers on the right sidewall circuit breaker panel (fig. 2-7).

b. Transponder Controls, Indicators, and *Functions (fig. 3-81).*

(1) **TEST-GO** indicator. Illuminates to indicate successful completion of built-in-test (BIT).

(2) **TEST-MON** indicator. Illuminates to indicate system malfunction or interrogation by a ground station.

(3) **ANT** switch. Selects desired antenna for signal input.

(a) TOP. Selects upper antenna.

(b) DIV. Selects diverse (both) antennas.

(c) BOT. Selects lower antenna.

(4) **RAD TEST-OUT** switch. Enables reply to TEST mode interrogations from test set.

(5) **MASTER CONTROL.** Selects system operating mode.

(a) OFF. Deactivates system.

(b) STBY. Activates system warm-up (standby) mode.

(c) NORM. Activates normal operating mode.

(d) EMER. Transmits emergency reply code.

(6) STATUS **ANT indicator. Illuminates to indicate the BIT or MON** fault is caused by high **VSWR** in antenna.

(7) KIT. Illuminates to indicate the **BIT** or **MON** fault is caused by external computer.

(8) STATUS ALT indicator. Illuminates to indicate the **BIT** or **MON** fault is caused by the altitude digitizer.

(9) IDENT - MIC - OUT. Selects source of aircraft identification signal.

(a) IDENT. Activates transmission of identification pulse (IP).

(b) MIC. Enables either control wheel **POS IDENT** switch to activate transmission of ident signal from transponder.

(c) OUT. Disallows outgoing signal.

(10) MODE 4 reply annunciator light. Illuminates to indicate a reply has been made to a valid Mode 4 interrogation.

(11) MODE 4 AUDIO OUT switch. Selects monitor mode for mode 4 operation.

(a) AUDIO. Enables sound and sight monitoring of mode 4 operation.

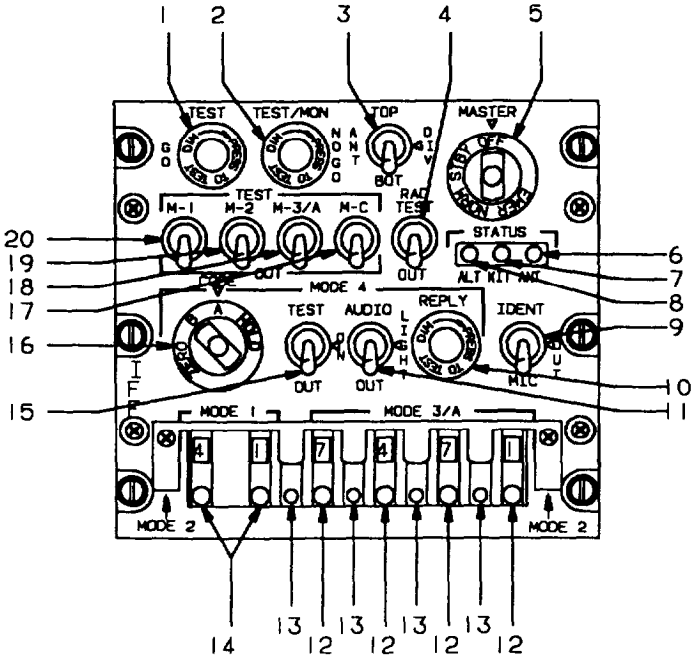

1. TEST-GO Indicator
2. TEST/MON, NO GO Indicator
3. ANTenna Switch
4. RAD TEST-OUT Switch
5. MASTER Control
6. STATUS ANT Indicator
7. STATUS KIT Indicator
8. STATUS ALT Indicator
9. IDENT MIC-OUT Switch
10. MODE 4 REPLY Indicator
11. MODE 4 AUDIO-LIGHT-OUT Switch
12. MODE 3/A Code Selectors
13. MODE 2 Code Selectors
14. MODE 1 Code Selectors
15. MODE 4 TEST-ON-OUT Switch
16. MODE 4 Code Selector
17. M-C TEST Switch
18. M-3/A TEST Switch
19. M-2 TEST Switch
20. M-1 TEST Switch

A93FE00001 12 C

Figure 3-82. Transponder Control Panel

(b) LIGHT. Enables monitoring REPLY indicator for mode 4 operation.

(c) OUT. Deactivates monitor mode.

(12) MODE 3/A code selectors. Select desired reply codes for mode 3/A operation.

(13) MODE 2 code selectors. Select desired reply codes for mode 2 operation. The cover over mode select switches must be slid forward to display the selected mode 2 code.

(14) MODE 1 code selectors. Select desired reply codes for mode 1 operation.

(15) MODE 4 TEST-ON-OUT switch. Selects test mode of Mode 4 operation.

(a) TEST, Activates built-in-test of mode 4 operation.

(b) ON. Activates mode 4 operation.

(c) OUT. Disables mode 4 operation.

(76) MODE 4 code control. Selects preset mode 4 code.

(17) M-C, M-3A, M-2, and M-1 switches. Select test or reply mode of respective codes.

(a) TEST, Activates self-test of selected code. Transponder can also reply.

(b) ON. Activates normal operation.

(c) OUT. Deactivates operation of selected code.

(18) POS IDENT pushbutton (control wheels, fig. 2-21). When pressed, activates transponder identification reply.

c. Transponder - Normal Operation.

(1) Turn-on procedure. MASTER switch - STBY. Depending on type of receiver installed, TEST/ MON NO GO indicator may illuminate. Disregard this signal.

(2) Test procedure.

NOTE

Make no checks with the master switch in EMER, or with M-3/A codes 7600 or 7700 without first obtaining authorization from the interrogating station(s).

1. Allow set two minutes to warm up.
2. Select codes assigned for use in modes 1 and 3/A by depressing and releasing the pushbutton for each switch until the desired number appears in the proper window.
3. Lamp indicators - Operate press-to-test feature.
4. M-l switch - Hold in TEST. Observe no annunciators illuminate.
5. M-l switch - Return to ON.
6. Repeat steps 4 and 5 for the M-2, M-3/A and M-C mode switches.
7. MASTER control - NORM.
8. MODE 4 code control - A. Set a code in the external security computer.
9. MODE 4 AUDIO OUT switch - OUT.

(3) Modes 1, 2, 3/A, and/or 4 operating procedure.

NOTE

If the external security computer is not installed, a NO GO annunciator will illuminate any time the MODE 4 switch is moved out of the OFF position.

1. MASTER control - NORM.
2. M-l, M-2, M-3/A, and/or MODE 4 ON-OUT switches - ON. Actuate only those switches corresponding to required codes. The remaining switches should be left in OUT position.
3. MODE 1 code selectors - Set (if applicable).
4. MODE 3/A code selectors - Set (if applicable).
5. MODE 4 code control - Set (if required).
6. MODE 4 REPLY indicator - Monitor to determine when transponder set is replying to SIF interrogation.
7. MODE 4 AUDIO OUT switch - Set (as required to monitor Mode 4 interrogations and replies).
8. MODE 4 audio and/or indicator - Listen and/or observe (for mode 4 interrogations and replies).

9. **IDENT-MIC-OUT** switch - Press to **IDENT** momentarily.

10. **MODE 4 TEST-ON-OUT** switch - **TEST.**

11. Observe that the **TEST GO** annunciator illuminates.

12. **MODE 4 TEST-ON-OUT** switch - **ON.**

13. **ANT** switch - **BOT.**

14. Repeat steps 4, 5 and 6. Observe that **TEST GO** indicator illuminates.

15. **TOP-DIV-BOT-ANT** switch - **TOP.**

16. Repeat step 14.

17. **TOP-DIV-BOT-ANT** switch - **DIV.**

18. Repeat step 14.

19. When possible, obtain the cooperation of an interrogating station to exercise the **TEST** mode. Execute the following steps:

20. **RAD TEST-OUT** switch - **RAD TEST.**

21. Obtain verification from interrogating station that **TEST MODE** reply was received.

22. **RAD TEST-OUT** switch - **OUT.**

(4) Transponder set identification-position operating procedure. The transponder set can make identification-position replies while operating in code modes 1, 2, and/or 3/A, in response to ground station interrogations. This type of operation is initiated by the operator as follows:

1. **MODES 1, 2** and/or **3/A** - **ON,** as required.

2. **IDENT-OUT-MIC** switch - Press momentarily to **IDENT,** when directed.

NOTE

Holding circuits within the transponder receiver-transmitter will transmit identification-position signals for 15 to 30 seconds. This is normally sufficient time for ground control to identify the aircraft's position. During the 15 to 30 second period, it is normal procedure to acknowledge via the aircraft communications set that identification/ position signals are being generated,

Set any of the **M1, M2, M3/A, M-C,** or **MODE 4** switches to **OUT** to inhibit transmission of replies in undesired modes.

With the **IDENT-OUT-MIC** switch set to the **MIC** position, the **POS IDENT** button on either control wheel must be depressed to transmit identification pulses.

(5) Shutdown procedure.

1. To retain mode 4 code in external computer during a temporary shutdown:

   a. **MODE 4** code switch - Rotate to **HOLD.**

   b. Wait 15 seconds.

   c. **MASTER** control - **OFF.**

2. To zero the mode 4 code in the external computer, turn **MODE 4 code** switch to **ZERO.**

3. **MASTER** control - **OFF.** This will automatically zero external computer unless codes have been retained (step 1 above).

3-35. TRANSPONDER (MST 67A).

a. Description. The transponder (MST 67A) responds to interrogation to allow the aircraft to be located in range and azimuth by a ground Air Traffic Control Radar Beacon System (ATCRBS) radar site. Upon receiving mode A or mode C interrogation the transponder transmits coded returns that identify the aircraft by code number and/or reports the altitude at which the aircraft is operating. This mode S transponder transmits random replies called squitter which include the unique mode S address assigned to the transponder at installation. The ATC mode S ground station receives this mode S reply and can selectively interrogate one specific address. The transponder receives on a frequency of 1030 MHz and transmits coded reply pulses on a frequency of 1090 MHZ. The range of the transponder is line of sight. The transponder (MST 67A) is powered through a 3-ampere circuit breaker, placarded **XPNDR NO. 2.** located on the right sidewall circuit breaker panel (fig. 2-7).

b. Transponder Control Unit Operating Controls (MST 67A).

(1) Reply indicator. The reply indicator is an **R** annunciator located in the upper left portion of the display. The reply indicator illuminates to indicate that the transponder is replying to ground interrogation. An interrogation which causes the **R** annunciator to illuminate will normally be processed with each sweep of the search radar which will normally be a 10 to 15 second interval.

(2) Ident code/flight level test display

(3)Photocell. The built-in photocell automatically controls display brightness.

(4)Ident switch. The ident switch, placarded **IDT,** when depressed momentarily then released, holds the ident reply for approximately 25 seconds to assure the proper reply within at least one radar sweep. During this time the **IDT** annunciator will be illuminated on the transponder control unit display. The ident function may also be activated from switches mounted on each control wheel (placed **ATC IDENT**).

(5) Ident indicator. The ident indicator, placarded **IDT, illuminates** when the ident function has been activated by depressing the ident **(IDT)** switch on the transponder control panel or one of the control wheel ident switches (placarded **ATC IDENT).**

(6) Function switch. The function switch, placarded **TST - SBY - ON - ALT - VFR,** is used to select the operating mode of the transponder.

(a) TST. The test **(TST)** position of the function switch provides for a preflight or airborne check of transponder operation. This check is independent of any ground interrogation. Setting the function switch to **TST** should cause the **R** (reply) annunciator to flash and the **FL** (flight level) annunciator to illuminate. The transponder transmitter is inhibited during the test function. After 3 seconds the unit will revert to the altitude reporting **(ALT)** mode.

(B) SBY. Setting the function switch to **SBY** puts the transponder in the standby mode.

(c) ON. Setting the function switch to the **ON** position, causes the transponder to provide identification and position information.

(d) ALT. Setting the function switch to the **ALT** position, causes the transponder to provide identification, position, and altitude information.

(e) VFR. Setting the function switch to the **VFR** position will set the transponder code to 1200.

(7) Code selector Switch. Momentarily depressing the code selector switch will cause the cursor to move to the right under the next digit of the transponder code display. Rotating the code selector switch clockwise

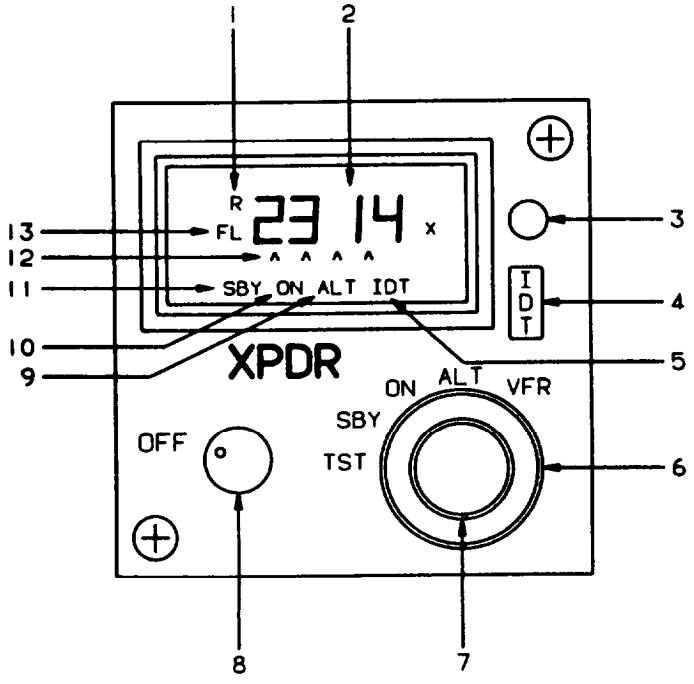

1. Reply Indicator
2. Ident Code/Flight Level/ Test Display
3. Photocell
4. Ident Switch
5. Ident Indicator
6. Function Switch
7. Code Selector Switch
8. Power Switch
9. Altitude Mode Indicator
10. ON Indicator
11. Standby Indicator
12. Digit Select Cursor
13. Flight Level Indicator

A95BW03C0374 C

Figure 3-83. Transponder Control Unit (MST 67A)

or counterclockwise will change the numerical value of the selected digit.

(8) Power switch. Turning the power switch clockwise from the **OFF** position applies electrical power to the transponder.

(9) AItitude mode indicator. Illumination of the altitude mode indicator, placarded **ALT,** indicates that the transponder is providing aircraft identification, position, and altitude information.

(10) ON indicator. Illumination of the ON indicator indicates that the transponder is providing identification and position information but not altitude information.

(11) standby Indicator. Illumination of the standby indicator, placarded **SBY,** indicates that the transponder is in the standby mode.

(12) Digit select cursor. The digit select cursor is used to select the digit which will be changed by rotating the code selector switch.

(13) Flight level indicator. The flight level indicator, placarded **FL,** indicates that mode S flight level information is being provided.

c. Transponder Operation.

1. **BATT** switch - **ON.**
2. **AVIONICS MASTER PWR** switch - **ON.**
3. Power switch - **ON.**
4. Code selector switch - Set desired code.
5. Function switch - **TST.** Check that all segments of the display illuminate for 2 seconds, then that the squawk code display changes to flight level.
6. Function switch - Select desired operating mode.

CHAPTER 4
MISSION EQUIPMENT

4-1. MISSION EQUIPMENT.

Mission equipment is not installed on this aircraft.

CHAPTER 5
OPERATING LIMITS AND RESTRICTIONS

Section I. GENERAL

5-1. PURPOSE.

This chapter identifies or refers to operating limits **and** restrictions that shall be observed during ground and flight operations.

5-2. GENERAL.

The operating limitations set forth in this chapter are the direct result of design analysis, tests, and operating experiences. Compliance with these limits will allow the pilot to safely perform the assigned missions and to derive maximum utility from the aircraft. Limits concerning maneuvers, weight, and center of gravity are also covered in this chapter.

5-3. EXCEEDING OPERATIONAL LIMITS.

Anytime an operational limit is exceeded, an appropriate entry shall be made on DA Form 2408-13-1. Entry shall state the limit or limits which were exceeded, range, time beyond limits, and any additional data that would aid maintenance personnel in the maintenance action that may be required.

5-4. RESTRICTED CATEGORY LIMITATIONS (ABOVE 12,500 LBS).

a. No person may be carried on a restricted category civil aircraft unless that person -

(1) Is a flight crewmember.

(2) Is a flight crewmember trainee.

(3) Performs an essential function in connection with a special purpose operation for which the aircraft is certificated; or

(4) Is necessary to accomplish the work activity directly associated with that special purpose.

b. Except when operating in accordance with the terms and conditions of a certificate of waiver or special operating limitations issued by the Administrator, no person may operate a restricted category civil aircraft within the United States -

(1) Over a densely populated area;

(2) In a congested airway; or

(3) Near a busy airport where passenger transport operations are conducted.

5-5. MINIMUM CREW REQUIREMENTS.

The minimum crew required for aircraft operation is two pilots.

Section II. SYSTEM LIMITS

5-6. INSTRUMENT MARKINGS.

Instruments which display operating limitations are illustrated in figure 5-1. The operating limitations are color coded on the instrument faces. Color coding of each instrument is explained in the illustration,

5-7. INSTRUMENT MARKING COLOR CODES.

Operating limitations and ranges are indicated by the colored markings which appear on the dial faces of engine, flight, and utility system instruments. Red **markings** indicate the limit above or below which continued operation is likely to cause damage or shorten life. The green markings indicate the safe or normal range of operation. The yellow markings indicate the range when special attention should be given to the operation covered by the instrument. Operation is permissible in the yellow range, but should be avoided. White markings on the airspeed indicator denote the flap operating range. The blue marking on the airspeed indicator denotes best rate of climb with one engine inoperative, at maximum gross weight, maximum forward c.g., sea level standard day conditions.

5-8. PROPELLER LIMITATIONS.

The maximum propeller overspeed limit is 2200 RPM and is time-limited to five seconds. Sustained propeller overspeeds faster than 2000 RPM indicate failure of the primary governor. Flight may be continued at propeller overspeeds up to 2120 RPM, provided torque is limited to 81%. Sustained propeller overspeeds faster than 2120 RPM indicate failure of both the primary governor and the secondary governor, and such overspeeds are unapproved.

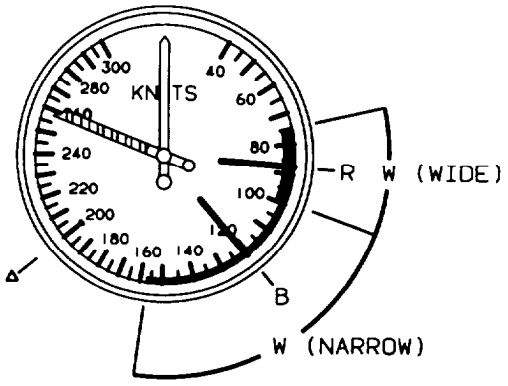

AIRSPEED

R/W		259 KIAS MAXIMUM V_{mo} (0.52 MACH)
		NOTE MAXIMUM ALLOWABLE AIRSPEED (RED STRIPED) POINTER IS SELF ADJUSTING WITH ALTITUDE
R		86 KIAS MINIMUM SINGLE-ENGINE CONTROL SPEED (V_{mca})
B		121 KIAS ONE-ENGINE INOPERATIVE BEST RATE-OF-CLIMB (V_{yse})
W		75-157 KIAS FULL FLAP OPERATING RANGE (WIDE WHITE ARC 75-99, NARROW WHITE ARC 99-157)
W		200 KIAS MAXIMUM APPROACH FLAP EXTENSION SPEED

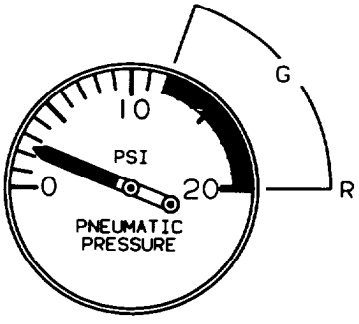

PNEUMATIC PRESSURE

G		12-20 PSI NORMAL OPERATING RANGE
R		20 PSI MAXIMUM

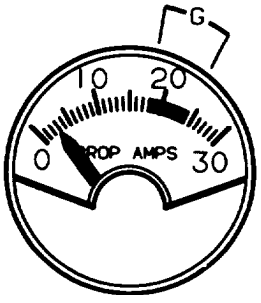

PROPELLER DEICER AMMETER

G		18-24 AMPERES NORMAL OPERATION

COLOR CODES	
R = RED	B = BLUE
G = GREEN	W = WHITE
Y = YELLOW	BK = BLACK

A958W05C0447 C

Figure 5-1. Instrument Markings (Sheer 1 of 4)

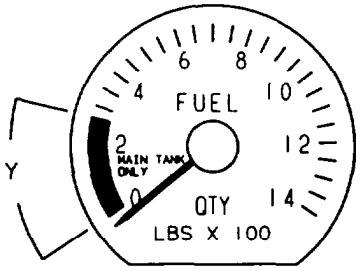

FUEL QUANTITY

Y — 0-265 LBS NO TAKEOFF RANGE

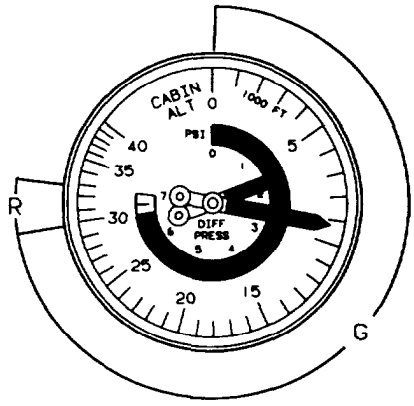

CABIN ALTIMETER AND DIFFERENTIAL PRESSURE

G — 0-6.6 PSI NORMAL RANGE

R — 6.6 PSI MAXIMUM

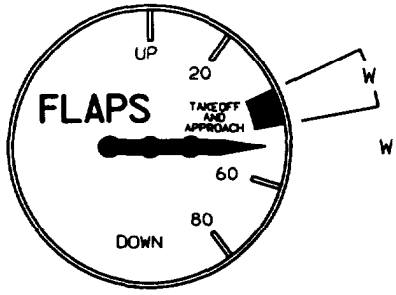

FLAP POSITION INDICATOR

W — 40% TAKEOFF AND APPROACH

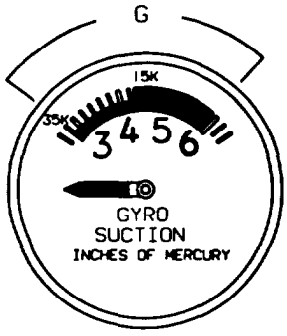

GYRO SUCTION

G — 2.8 TO 4.3 IN. HG, NARROW GREEN ARC (NORMAL FROM 35,000 TO 15,000 FEET)

4.3 TO 5.9 IN. HG, WIDE GREEN ARC (NORMAL FROM 15,000 TO SEA LEVEL)

35K MARKED ON FACE OF GAGE AT 3.0 IN. HI
15K MARKED ON FACE OF GAGE AT 4.3 IN. HI

A95BW05C0448 C

*Figure 5-1. Instrument Markings (Sheet 2 **of** 4)*

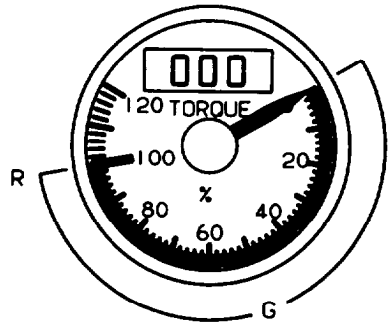

TORQUE

G — 0 - 100% NORMAL OPERATING RANGE

R — 100% MAXIMUM

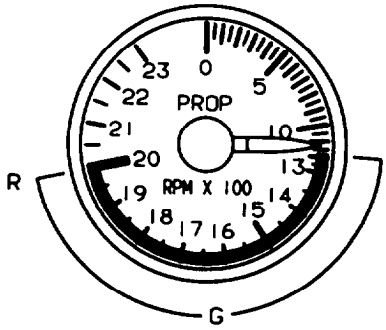

PROPELLER TACHOMETER

G — 1180 - 2000 RPM NORMAL OPERATING RANGE

R — 2000 RPM MAXIMUM

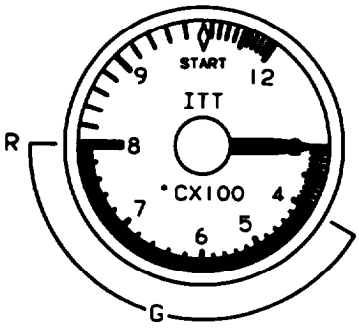

INTERSTAGE TURBINE TEMPERATURE

G — 400 - 800°C NORMAL OPERATING RANGE

R — 800°C MAXIMUM TAKEOFF

R — 1000°C MAXIMUM STARTING

A958W05C0449 C

Figure 5-1. Instrument Markings (Sheet 3 of 4)

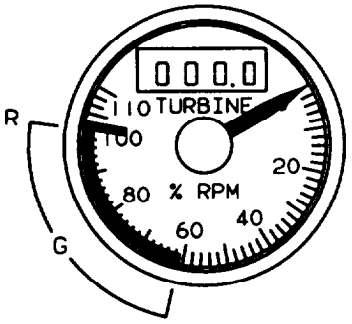

TURBINE TACHOMETER (N_1 SPEED)

G — 61 - 101.5% NORMAL OPERATING RANGE

R — 101.5% MAXIMUM

OIL TEMPERATURE AND PRESSURE

OIL TEMPERATURE SCALE

G — 0 - 99°C NORMAL OPERATING RANGE

R — 99°C MAXIMUM

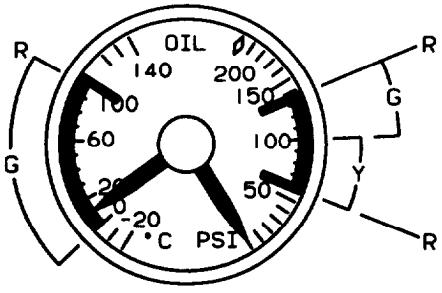

OIL PRESSURE SCALE

R — 60 PSI MIMIMUM
135 PSI MAXIMUM

Y — 60 - 100 PSI

G — 100 - 135 PSI NORMAL OPERATING RANGE

R — 200 PSI MAXIMUM STARTING WITH COLD OIL

NOTE: ± 10 PSI FLUCTUATIONS ARE ACCEPTABLE

A95BW05C0450 C

Figure S-l. Instrument Markings (Sheet 4 of 4)

5-9. STARTER LIMITATIONS.

Use of the starter is limited to 40 seconds on, 60 seconds off, 40 seconds on, 60 seconds off, 40 seconds on, then 30 minutes off. Contact maintenance personnel for assistance if no engine start occurs during cycle noted in this paragraph.

5-10. AUTOPILOT LIMITATIONS.

a. During autopilot operations, a pilot must be seated at the controls with seat belt fastened.

b. Maximum speed limit for autopilot operation is unchanged from the aircraft maximum speed limit.

c. Autopilot operation is prohibited below 200 feet AGL. This includes takeoffs and landings.

d. The minimum approach speed for coupled approaches is 120 KIAS.

e. Operation of the autopilot must be in conformity with the appropriate manufacturer's pilot's guide.

f. The autopilot preflight check must be satisfactorily completed prior to takeoff or the **AP/TRIM POWER** switch must be set to the **OFF** position.

g. For proper operation in **VOR NAV** or **VOR APR** modes, the DME and NAV receivers must be channelled to the same source.

5-11. FUEL SYSTEM LIMITS.

NOTE

Aviation gasoline (AVGAS) contains a form of lead which has an accumulative adverse effect on gas turbine engines. The lowest octane AVGAS available (less lead content) should be used. If any AVGAS is used, the total operating time must be entered on DA Form 2408-13-1. Operating time on AVGAS is computed on the basis of quantity used and average consumption.

a. Operating Limits.

(1) Operation with **FUEL PRESS** annunciator light illuminated is limited to 10 hours.

Log time (duration) **FUEL PRESS** light light is illuminated on DA Form 2408-13-1.

(2) Crossfeed of AVGAS to an engine with a failed engine-driven boost pump is not authorized. Crossfeed of AVGAS to an engine with a failed engine-driven boost pump will result in less than minimum fuel pressure to the high pressure pump on that side.

(3) Takeoff torque may not be attainable during operations with AVGAS.

(4) AVGAS operation is limited to 150 hours.

(5) Crossfeed fuel will not be available from the side with an inoperative standby boost pump.

(6) The use of AVGAS requires the standby boost pumps to be used during all operations above 15,000 feet.

(7) Operation with JP-4 requires the use of standby pumps above 30,000 feet.

b. Fuel Management. Auxiliary tanks will not be filled for flight unless the main tanks are full. Maximum allowable fuel imbalance is 1000 pounds. Do not take off if fuel quantity gages indicate in yellow arc (less than 265 pounds of fuel in each main tank). Crossfeed only during single engine operation.

CAUTION

Anti-icing additive must be properly blended with the fuel to avoid deterioration of the fuel cell. The additive concentration by volume shall be a minimum of 0.060% and a maximum of 0.15%.

JP-4 fuel per MIL-T-5624 has anti-icing additive per MIL-I-27686 blended in the fuel at the refinery and no further treatment is necessary. Some fuel suppliers blend in anti-icing additive, in their storage tanks. Prior to refueling, check with the fuel supplier to determine if fuel has been blended. To assure proper concentration by volume of fuel on board, blend only enough additive for the unblended fuel.

c. Fuel System Anti-king. Icing inhibitor conforming to MIL-I-27686 will be added to commercial fuel not containing an icing inhibitor during fueling operations, regardless of ambient temperatures. The additive provides anti-icing protection and also functions as a biocide to kill microbiological growth in the aircraft fuel system.

5-12. LANDING GEAR CYCLING AND BRAKE DEICE LIMITATIONS.

a. *Hydraulic Landing Gear.* Landing gear cycles (a complete retraction and extension) are limited to one every 5 minutes for a total of 6 cycles followed by a 15

minute cool-down period.

b. Brake Deice. The following limitations apply to the brake deice system:

(1) The brake deice system shall not be operated at ambient temperatures above 15°C

(2) The brake deice system shall not be operated longer than 10 minutes (one timer cycle) with the landing gear retracted. If operation does not automatically terminate approximately 10 minutes after gear retraction, turn brake deice switch **OFF.**

(3) Maintain 85% N, or higher during simultaneous operation of the brake deice and surface deice systerns. If adequate pneumatic pressure cannot be provided for simultaneous operation of the brake deice and surface deice systems, turn brake deice switch **OFF.**

(4) Brake deice switch shall be turned **OFF** during single engine operation, in order to maintain an adequate supply of systems pneumatic bleed air.

5-13. PITOT HEAT LIMITATIONS.

Pitot heat should not be used for more than 15 minutes while the aircraft is on the ground.

Section III. POWER LIMITS

5-14. ENGINE LIMITATIONS.

Observe limitations found in table 5-1 during operation of this aircraft.

Each column is a separate limitation. The limits presented do not necessarily occur simultaneously. Whenever operating limits are exceeded, the pilot should record the

Table 5-1. Engine Operating Limitations

OPERATING CONDITION	SHP	TORQUE % (1)	MAXIMUM OBSERVED ITT°C	GAS GENERATOR RPM N_1 RPM	GAS GENERATOR RPM N_1 %	PROP RPM N_2	OIL PRESS PSI (2)	OIL TEMP °C (3) (4)
STARTING	---	---	1000 (5)	---	---	---	---	-40 (min)
LOW IDLE	---	---	750 (6)	22,875	61 (min)	1180	60 (min)	-40 to 99
HIGH IDLE	---	---	---	---	(7)	---	---	-40 to 99
TAKEOFF and MAX CONT	850	100	800	38,100	101.5	2000	100 to 135	0 to 99
MAX CRUISE	850	100 (8)	800	38,100	101.5	2000	100 to 135	0 to 99
CRUISE CLIMB and REC (NORMAL) CRUISE	850	100 (8)	770	38,100	101.5	2000	100 to 135	0 to 99
MAX REVERSE (9)	800	---	750	---	88	1900	100 to 135	0 to 99
TRANSIENT	---	123 (5)	850	38,500 (10)	102.6 (10)	2200 (5)	200	0 to 104 (11)

FOOTNOTES:

(1) Torque limit applies within range of 1600 - 2000 propeller rpm (N_2). Below 1600 propeller rpm, torque is limited to 49%.

(2) When gas generator speeds are above 27,000 rpm (72% N_1) and oil temperatures are between 60°C and 71°C, normal oil pressures are: 100 to 135 psi below 21,000 feet; 85 to 135 psi at 21,000 feet and above.

During extremely cold starts, oil pressure may reach 200 psi. Oil pressure between 60 and 85 psi is undesirable; it should be tolerated only for the completion of the flight, and then only at a reduced power setting not exceeding 49% torque. Oil pressure below 60 psi is unsafe; it requires that either the engine be shut down, or that a landing be made at the nearest suitable airport, using the minimum power required to sustain flight. Fluctuations of plus or minus 10 psi are acceptable.

(3) A minimum oil temperature of 55°C is recommended for fuel heater operation at take-off power.

(4) Oil temperature limits are -40°C and 99°C. However, temperatures of up to 104°C are permitted for a maximum time of 10 minutes.

(5) These values are time limited to 5 seconds.

(6) High ITT at ground idle may be corrected by reducing accessory load or increasing N_1 rpm.

(7) At approximately 70% N_1.

(8) Cruise torque values vary with altitude and temperature.

(9) This operation is time limited to 1 minute.

(10) These values are time limited to 10 seconds.

(11) Values above 99°C are time limited to 5 minutes.

BT05819

value and duration of the condition encountered, in the aircraft log. Operation of the engines is monitored by instruments, with reference to the operating limits marked on the face of each instrument.

CAUTION

Engine operation using only the engine-driven fuel pump without boost pump fuel pressure is limited to 10 cumulative hours. All time in this category shall be entered on DA Form 2408-13-1 for the attention of maintenance personnel.

Use of aviation gasoline is time-limited to 150 hours of operation during any Time-Between-Overhaul (TBO) period. It may be used in any quantity with primary or alternate fuel.

5-15. OVERTEMPERATURE AND OVERSPEED LIMITATIONS.

a. Whenever limiting temperatures, listed in the Engine Operating Limitations chart (table 5-1), are exceeded and cannot be controlled by retarding the power levers, the engine shall be shut down and a landing made as soon as possible.

b. During engine starting the temperatures and time limits listed in the Engine Operating Limitations chart (table 5-1) must be observed. When these limits are exceeded, the incident will be entered as an engine discrepancy in the appropriate maintenance forms. It is particularly important to record the amount and duration of over temperature.

c. Whenever the prescribed engine overspeed limit or engine RPM operating limit is exceeded, the incident must be reported as an engine discrepancy in the appropriate maintenance forms. It is particularly important to record the maximum percent of RPM registered by the tachometer, and the duration of overspeed.

d. Continued engine operation above 770°C will reduce engine life.

5-16. POWER DEFINITIONS FOR ENGINE OPERATIONS.

The following definitions describe the engine power ratings.

a. Takeoff Power. The maximum power permissible.

b. Maximum Continuous Power. Maximum continuous power is the highest power rating not limited by time. Use of this rating is intended for emergency situations at the discretion of the pilot.

5-17. GENERATOR LIMITS.

Maximum generator load is limited for flight and variable during ground operations. Observe the limits shown in table 5-2 during ground operation.

Table 5-2. Generator Load Limits

GENERATOR LOAD	MINIMUM GAS GENERATOR RPM - N_1	
	WITHOUT AIR CONDITIONING	*WITH AIR CONDITIONING
0% to 80%	61%	62%
80% to 85%	65%	65%

**Right engine only.*

BT05546

Section IV. LOADING LIMITS

5-18. CENTER OF GRAVITY LIMITATIONS.

Center of gravity limits and instructions for computation of the center of gravity are contained in Chapter 6. The center of gravity range will remain within limits, providing the aircraft loading is accomplished according to instructions in Chapter 6.

5-19. WEIGHT LIMITATIONS.

WARNING

The ability to experience loss of engine power and successfully stop, continue the takeoff, or climb, before or after gear retraction is not assured for all conditions. Thorough mission planning must be accomplished prior to takeoff by analysis of maximum takeoff weight permitted by takeoff distance, accelerate-stop, positive one engine inoperative climb at lift off, accelerate-go. takeoff climb gradient, and climb performance. This data will describe performance capabilities for critical mission decisions.

a. Normal Category.

(1) Takeoff. Maximum gross takeoff weight is 12,500 pounds.

(2) Landing. Maximum gross landing weight is 12,500 pounds.

(3) Maximum Ramp Weight. Maximum ramp weight is 12,590 pounds.

(4) Maximum Zero Fuel Weight. Maximum zero fuel weight is 11,000 pounds.

b. Restricted Category (High Gross Weight Operations).

(1) Takeoff. Maximum gross takeoff weight is 14,000 pounds.

(2) Landing. Maximum gross landing weight is 13,500 pounds.

(3) Maximum Ramp Weight. Maximum ramp weight is 14,090 pounds.

(4) Maximum Zero fuel Weight. Maximum zero fuel weight is 11.000 pounds.

5-20. CABIN AIRSTAIR DOOR WEIGHT LIMITATION.

The maximum weight that may be placed on the steps of the cabin airstair door is 300 pounds.

5-21. TOILET WEIGHT LIMITATION.

The maximum weight of a person occupying the toilet during takeoff or landing shall not exceed 238 pounds.

Section V. AIRSPEED LIMITS, MAXIMUM AND MINIMUM

5-22. AIRSPEED LIMITATIONS.

All placarded airspeeds, and airspeed indicator readings contained in procedures, text, and illustrations throughout this Operator's Manual are given as indicated airspeed (IAS) unless otherwise noted.

5-23. MAXIMUM ALLOWABLE AIRSPEED.

The maximum allowable airspeed is 259 KIAS below 11,500 feet, and M_{mo} of 0.52 Mach as indicated by the maximum allowable airspeed pointer (red striped) between 11,500 feet to 35,000 feet.

5-24. LANDING GEAR EXTENSION/EXTENDED SPEED.

The airspeed limit for extending the landing gear and for flight with the landing gear extended is 181 KIAS.

5-25. LANDING GEAR RETRACTION SPEED.

The airspeed limit for retracting the landing gear is 163 KIAS.

5-26. WING FLAP EXTENSION SPEEDS.

The airspeed limit for **APPROACH** extension (40%) of the wing flaps is 200 KIAS. The airspeed limit for flap positions beyond **APPROACH** is 157 KIAS (V_{fe}). If wing flaps are extended above these speeds, the flaps or their operating mechanisms may be damaged.

5-27. MINIMUM SINGLE ENGINE CONTROL AIRSPEED (V_{MCA}).

The minimum single engine control airspeed (V_{mca}) at sea level standard conditions is 86 KIAS.

5-28. MAXIMUM DESIGN MANEUVERING SPEED.

The maximum design maneuvering speed is 181 KIAS.

Section VI. MANEUVERING LIMITS

5-29. MANEUVERS.

a. The following maneuvers are prohibited.

(1) Spins.

(2) Aerobatics of any kind.

(3) Abrupt maneuvers above 181 KIAS.

b. Flight load factor limits (12,500 pounds). Any maneuver which results in a positive load factor of 3.17 G's or a negative load factor of 1.27 G's with wing flaps up; or a positive load factor of 2.0 G's, or 0 G's with flaps down.

c. flight load factor limits (14,000 pounds). Any maneuver which results in a positive load factor of 3.10 G's or a negative load factor of 1.24 G's with wing flaps up; or a positive load factor of 2.0 g's, or 0 g's with flaps down.

d. Recommended turbulent air penetration airspeed is 170 KIAS.

5-30. BANK AND PITCH LIMITS.

a. Bank limits are 60° left or right.

b. Pitch limits are 30° above or below the horizon.

Section VII. ENVIRONMENTAL RESTRICTIONS

5-31. ALTITUDE LIMITATIONS.

The maximum altitude that the aircraft may be operated at is 35,000 feet. When operating with inoperative yaw damp, the altitude limit is 17,000 feet.

5-32. TEMPERATURE LIMITS.

a. The aircraft shall not be operated when the ambient temperatures are warmer than ISA +37°C at sea level to 25,000 feet, or ISA +31°C above 25,000 feet.

b. The ice vanes shall be extended for operations in ambient temperatures of 5° C or below when flight free of visible moisture cannot be assured.

c. Minimum free air temperature for operation of deicing boots shall be -40°C

5-33. FLIGHT UNDER IMC (INSTRUMENT METEOROLOGICAL CONDITIONS).

This aircraft is qualified for operation in instrument meteorological conditions.

5-34. ICING LIMITATIONS (TYPICAL).

WARNING

While in icing conditions, if there is an unexplained 30% increase of torque needed to maintain airspeed in level flight, a cumulative total of two or more inches of ice accumulation on the wing, an unexplained decrease of 15 knots IAS, or an unexplained deviation between pilot's and copilot's airspeed indicators, the icing environment should be exited as soon as practicable. Ice accumulation on the pitot tube assemblies could cause a complete loss of airspeed indication.

The following conditions indicate a possible accumulation of ice on the pitot tube assemblies and unprotected aircraft surfaces. If any of these conditions are observed, the icing environment should be exited as soon as practicable.

a. Total ice accumulation of two inches or more on the wing surfaces. Determination of ice thickness can be accomplished by summing the estimated ice thickness on the wing prior to each pneumatic boot deice cycle (e.g. four cycles of minimum recommended 1/2-inch accumulation).

b. A 30 percent increase in torque per engine required to maintain a desired airspeed in level flight (not to exceed 85 percent torque) when operating at recommended holding speed.

c. A decrease in indicated airspeed of 15 knots after entering the icing condition (not slower than 1.4 power off stall speed) if maintaining original power setting in level flight. This can be determined by comparing pre-icing condition entry speed to the indicated speed after a surface deice cycle is completed.

d. Any variations from normal indicated airspeed between the pilot's and copilot's airspeed indicators.

5-35. ICING LIMITATIONS (SEVERE).

WARNING

Severe icing may result from environmental conditions outside of those for which the aircraft is certificated. Flight in freezing rain, freezing drizzle, or mixed icing conditions (supercooled liquid water and ice crystals) may result in a buildup on protective surfaces exceeding the capability of the ice protection system, or may result in ice forming aft of these protected surfaces. This ice may not shed using ice protection systems, and may seriously degrade the performance and controllability of the aircraft.

a. During flight, severe icing conditions that exceed those for which the aircraft is certificated shall be determined by the following visual cues. If one or more of these visual cues exist, immediately request priority handling from air traffic control to facilitate a route or an altitude change to exit the icing conditions:

(1) Unusually extensive ice accreted on the airframe in areas not normally observed to collect ice.

(2) Accumulation of ice on the upper (or lower, as appropriate) surface of the wing aft of the protected area.

(3) Accumulation of ice on the propeller spinner farther aft than normally observed.

b. Since the autopilot may mask tattle cues that indicate adverse changes in handling characteristics, use of the autopilot is prohibited when any of the visual cues specified above exist, or when unusual lateral trim requirements or autopilot trim warnings are encountered while the aircraft is in icing conditions.

NOTE

All icing detection lights must be operative prior to flight into icing conditions at night. This supersedes any relief provided by the master minimum equipment list (MMEL) or equivalent.

5-36. CROSSWIND LIMITATIONS.

WARNING

Landing with wind conditions in excess of the demonstrated crosswind component may result in damage to the aircraft. This should only be attempted during emergency situations.

The maximum demonstrated crosswind component is 20 knots at 90 degrees. Landing the aircraft in a crab will impose side loads on the landing gear and should be recorded on DA Form 2408-13-1. Refer to Chapter 8 for crosswind landing techniques.

5-37. OXYGEN REQUIREMENTS.

a. Oxygen requirements will be in accordance with AR95-1.

b Oxygen system data/duration tables are found in Chapter 2.

5-38. CABIN PRESSURE LIMITS.

Maximum cabin differential pressure is 6.6 PSI.

5-39. CRACKED WINDSHIELD.

a. External Crack In flight. If an external windshield crack is noted, no action is required in flight.

NOTE

Heating elements may be inoperative in areas of crack.

b. intenal Crack In-light. If it is determined that an internal crack has occured in flight, perform Cracked Cabin Window procedure in chapter 9.

c. External Crack On Ground. If cracking of windshield outer ply only is observed on the ground, unpressurized flight may be conducted provided the following procedures are observed:

1. Cracking must not significantly impair visibility.
2. Cracking must not intefere with use of windshield wipers.
3. Heating elements must be operative for flight into icing.
4. A temporary placard must be fabricated and placed in clear view of the pilot until the windshield is replaced. The placard should read as follows:

DUE TO A CRACK IN THE WINDSHIELD, PRESSURIZED FLIGHT IS PROHIBITED. CONDUCT FLIGHTS WITH BLEED AIR VALVES IN ENVIR OFF POSITION AND CABIN PRESS SWITCH IN DUMP POSITION.

d. Infernal Crack On Ground. Inner ply cracking is not a structural consideration for replacement prior to next flight, but one of possible glass flaking which could interfere with pilot vision.

5-40. CRACKED CABIN WINDOW.

If crack(s) in a cabin window ply(s) occurs in-flight, perform the Cracked Cabin Window emergency procedure in Chapter 9. If a cabin window has developed a crack, the aircraft shall not be flown once landed, without proper ferry flight authorization.

If cracking, chipping or stress crazing that can be felt with the fingernail occurs in either ply of the cabin window, the window should be replaced in accordance with the approved maintenance instructions.

If for some reason, the window cannot be replaced prior to the next flight, unpressurized flight may be conducted, provided the following placards are installed in the aircraft.

a. The following placard must be placed in clear view of the pilot.

PRESSURIZED FLIGHT IS PROHIBITED DUE TO A DAMAGED WINDOW. CONDUCT FLIGHT WITH THE CABIN PRESS SWITCH IN THE DUMP POSITION.

b. The following placard must be placed next to the pressurization control.

UNPRESSURIZED FLIGHT ONLY PERMITTED.

If a crack is found in both the inner and outer ply of the cabin window, the window must be replaced PRIOR TO FURTHER FLIGHT OF THE AIRCRAFT, unless proper ferry flight authorization has been obtained.

Section VIII. OTHER LIMITATIONS

5-41. INTENTIONAL ENGINE OUT SPEED.

Intentional inflight engine cuts below the safe one engine inoperative speed (V_{sse} 104 KIAS) are prohibited.

5-42. LANDING ON UNPREPARED RUNWAY.

CAUTION

Except in an emergency, propellers should be moved out of reverse below 40 knots to minimize propeller blade erosion, and during crosswind to minimize stress imposed on propellers, engines, and airframe. Care must be exercised when reversing on runways with loose sand or dust on the surface. Flying gravel will damage propeller blades and dust may impair the pilot's forward visibility at low aircraft speeds.

The aircraft has demonstrated landings on hard, smooth runways. Hard braking, i.e., skidding tires while operating on other than smooth runways, can result in damage to the landing gear. Operations from unimproved runways (rocks, potholes, mud, deteriorated surfaces) are prohibited. When landing on other than dry surfaces, use discretionary propeller reverse to stop the aircraft on the available runway.

Section IX. REQUIRED EQUIPMENT FOR VARIOUS CONDITIONS OF FLIGHT

5-43. REQUIRED EQUIPMENT LISTING.

a. A Required Equipment listing (table 5-3) is provided to enable the pilot to identify those systems/components required for flight. For the sake of brevity, the listing does not include obviously required items such as wings, rudder, flaps, engines, landing gear, etc. It is important to note that ALL ITEMS WHICH ARE RELATED TO THE AIRWORTHINESS OF THE AIRCRAFT AND NOT INCLUDED ON THE LIST ARE AUTOMATICALLY REQUIRED TO BE OPERATIVE.

b. It is the final responsibility of the pilot to determine whether the lack of, or inoperative status of a piece of equipment on the aircraft will limit the conditions under which the aircraft may be operated.

(1) (-) Indicates item may be inoperative for the specified flight condition.

(2) (*) Refers to remarks and/or exceptions column for explicit information or reference.

(3) Numbered items indicate the number of items required for flights by AR 95-1.

c. The pilot is responsible for exercising the necessary operational control to assure that no aircraft is flown with multiple items inoperative, without first determining that any interface or interrelationship between inoperative systems or components will not result in a degradation in the level of safety and/or cause an undue increase in crew workload.

d. The exposure to additional failures during continued operation with inoperative systems or components must also be considered in determining that an acceptable level of safety is being maintained. The list may not deviate from requirements of the Operator's Manual limitations section, emergency procedures or safety of flight messages.

SYSTEM and/or EQUIPMENT	VFR DAY	VFR NIGHT	IFR DAY	IFR NIGHT	ICING CONDITIONS	
ELECTRICAL POWER						
1. AC Volts/Frequency Meter	1	1	1	1	1	
2. Battery	1	1	1	1	1	
3. Battery Charge Monitor System and Annunciator	1	1	1	1	1	
4. DC Generator	2	2	2	2	2	
5. DC GEN Annunciator	2	2	2	2	2	One may be inoperative provided corresponding loadmeter is monitored.
6. DC Load Meter	2	2	2	2	2	One may be inoperative provided corresponding GEN caution light is monitored.
7. Inverter	2	2	2	2	2	
8. INVERTER Annunciator	1	1	1	1	1	
ENGINE INDICATIONS						
1. ITT Indicator	2	2	2	2	2	
2. Tachometer (Gas Generator)	2	2	2	2	2	
3. Tachometer (Propeller)	2	2	2	2	2	
4. Torque Indicator	2	2	2	2	2	
ENGINE OIL						
1. Chip Detector System Including Annunciators	2	2	2	2	2	
2. Oil Pressure Indicator	2	2	2	2	2	
3. Oil Temperature Indicator	2	2	2	2	2	
4. OIL PRESS Annunciator	2	2	2	2	2	
ENVIRONMENTAL						
1. Bleed Air Fail Annunciator	1	1	2	2	2	Provided bleed air is not used from side of failed light.
2. Altitude Warning Annunciator (Cabin)	1	1	1	1	1	May be inoperative if aircraft remains unpressurized.
3. Cabin Rate of Climb Indicator	1	1	1	1	1	
4. Differential Pressure/Cabin Altitude Indicator	1	1	1	1	1	
5. Duct Overtemp Annunciator	*	*	*	*	*	May be inoperative provided bleed air is not required.
6. Outflow Valve	1	1	1	1	1	
7. Pressurization Controller	1	1	1	1	1	
8. Safety Valve	1	1	1	1	1	
9. Bleed Air Shutoff Valve	2	2	2	2	2	
FIRE PROTECTION						
1. Engine Fire Detector System and Annunciators	2	2	2	2	2	

SYSTEM and/or EQUIPMENT	VFR DAY	VFR NIGHT	IFR DAY	IFR NIGHT	ICING CONDITIONS	
FLIGHT CONTROLS						
1. Flap Position Indicator	1	1	1	1	1	
2. Flap System	1	1	1	1	1	
3. Stall Warning Horn	1	1	1	1	1	
4. Trim Tab Position Indicator (Rudder, Aileron, and Elevator)	3	3	3	3	3	
5. Yaw Damp System	1	1	1	1	1	May be inoperative for flights at or below 17,000 feet.
6. Static Discharge Wicks	0	0	6	6	6	Minimum required-one wick at outboard end of each control surface plus top of vertical stabilizer.
7. Rudder Boost	1	1	1	1	1	May be inoperative provided switch remains in OFF position and the circuit breaker is pulled.
FUEL						
1. Engine Driven Boost Pump	2	2	2	2	2	
2. Fuel Crossfeed System Including Annunciator	1	1	1	1	1	
3. Standby Fuel Boost Pump	1	1	1	1	1	Two required for operation on AVGAS above 20,000 feet.
4. FUEL PRESS Annunciator	2	2	2	2	2	
5. Fuel Quantity Indicating System Including Annunciators	2	2	2	2	2	
6. Firewall Fuel Shutoff System Including Annunciators	2	2	2	2	2	
7. Jet Transfer Pump	2	2	2	2	2	
8. Motive Flow Valve	2	2	2	2	2	
9. Fuel Flow Indicator	2	2	2	2	2	
ICE AND RAIN PROTECTION						
1. Alternate Static Air Source	0	0	1	1	1	
2. Engine Auto Ignition and Annunciators	2	2	2	2	2	
3. Engine Anti-Ice/Ice Vane System and Annunciators	2	2	2	2	2	
4. Heated Fuel Vent	0	0	0	0	2	
5. Heated Windshield (Left)	0	0	0	0	1	Both must be operational for flights above 10,000 feet.
6. Pitot Heat	0	0	2	2	2	
7. Pneumatic Pressure Indicator	0	0	1	1	1	
8. Propeller Deicer System	0	0	0	0	1	
9. Stall Warning Heat (Lift Transducer and Mounting Plate)	0	0	0	0	1	
10. Surface Deicer System	0	0	0	0	1	
11. Wing Ice Light	0	0	0	0	1	

SYSTEM and/or EQUIPMENT	VFR DAY	VFR NIGHT	IFR DAY	IFR NIGHT	ICING CONDITIONS	
LANDING GEAR						
1. Landing Gear Position Indicator Lights	3	3	3	3	3	
2. Landing Gear Handle Light	1	1	1	1	1	
3. Landing Gear Aural Warning	1	1	1	1	1	
4. Alternate Landing Gear Extension System	1	1	1	1	1	
5. Brake Deice Overheat Annunciators (If Installed)	2	2	2	2	2	
6. Hydraulic Fluid Low Annunciator	1	1	1	1	1	
7. Landing Gear Hydraulic Power Pack	1	1	1	1	1	
LIGHTS						
1. Cockpit and Instrument Lighting System	0	1	0	1	0	
2. Cabin Door Annunciator	1	1	1	1	1	
3. Landing Lights	0	1	0	1	0	
4. Position Lights	0	3	0	3	0	
5. Anticollision Lights System	0	1	0	1	0	
FLIGHT INSTRUMENTS						
1. Directional Gyro (Left)	0	0	1	1	1	
2. Clock	0	0	1	1	1	
3. Airspeed Indicator (Left)	1	1	1	1	1	
4. Altimeter (Left)	1	1	1	1	1	
5. Magnetic Compass	1	1	1	1	1	
6. Outside Air Temperature	1	1	1	1	1	
7. Turn and Slip Indicator (Left)	1	1	1	1	1	
8. Attitude Indicator (Left)	1	1	1	1	1	
OXYGEN						
1. Oxygen System	1	1	1	1	1	
PROPELLER						
1. Prop Reversing System Including Annunciators	2	2	2	2	2	
2. Prop Governor Test Switch	1	1	1	1	1	
3. Prop Overspeed Governor	2	2	2	2	2	
4. Prop Low-Pitch Stop	2	2	2	2	2	
5. Autofeather System Including Annunciators	1	1	1	1	1	May be inoperative provided switch remains OFF and circuit breaker is pulled.
VACUUM SYSTEM						
1. Instrument Air System	0	1	1	1	1	
2. Gyro Suction Indicator	1	1	1	1	1	

SYSTEM and/or EQUIPMENT	VFR DAY	VFR NIGHT	IFR DAY	IFR NIGHT	ICING CONDITIONS	
EQUIPMENT FURNISHINGS						
1. Seat Belts	*	*	*	*	*	* One per installed seat
2. Shoulder Harnesses, Pilot and Copilot	*	*	*	*	*	
EFIS EQUIPMENT	0	1	2	2	2	During IFR day, IFR night, or icing conditions, one EFIS display is required at the pilot and copilot station.
AVIONICS/NAVIGATION EQUIPMENT	*	*	*	*	*	* Per AR 95-1

NOTE

The above Kinds of Operations Equipment List does not include all specific flight instrument and communications/navigation equipment required by FAR Parts 91 and 135 Operating Requirements.

BTO5784

CHAPTER 6
WEIGHT/BALANCE AND LOADING

Section I. GENERAL

6-1. EXTENT OF COVERAGE.

Sufficient data has been provided so that, knowing the basic weight and moment of the aircraft, any combination of weight and balance can be computed.

6-2. CLASS.

Army model C-12R aircraft are in Weight and Balance Class 2. Additional directives governing weight and balance of Class 2 aircraft forms and records are contained in AR 95-3, TM 55-1500-342-23, and DA PAM 738-751.

6-3. AIRCRAFT COMPARTMENTS AND STATIONS.

The aircraft is separated into two compartments associated with loading. These compartments are the cockpit and the cabin. Figure 6-1 shows the general description of aircraft compartments.

Section II. WEIGHT AND BALANCE

6-4. PURPOSE.

The data to be inserted on weight and balance charts and forms are applicable only to the individual aircraft, the serial number of which appears on the title page of the booklet entitled WEIGHT AND BALANCE DATA supplied by the aircraft manufacturer and on the various forms and charts which remain with the aircraft. The charts and forms referred to in this chapter may differ in nomenclature and arrangement from time to time, but the principles on which they are based will not change.

6-5. CHARTS AND FORMS.

The standard system of weight and balance control requires the use of several different charts and forms. Within this chapter, the following are used:

1. Chart C - Basic Weight and Balance Record, DD Form 365-3.
2. Form F - Weight and Balance Clearance Form F, DD Form 365-4. (Transport).

6-6. RESPONSIBILITY.

The aircraft manufacturer inserts all aircraft identifying data on the title page of the booklet entitled WEIGHT AND BALANCE DATA and on the various charts and forms. All charts, including one sample Weight and Balance Clearance Form F, if applicable, are completed at time of delivery. This record is the basic weight and balance data of the aircraft at delivery. All subsequent changes in weight and balance are compiled by the weight and balance technician.

6-7. CHART C - BASIC WEIGHT AND BALANCE RECORD, DD FORM 365-3.

Chart C is a continuous history of the basic weight and moment resulting from structural and equipment changes made in service. At all times, the last weight and moment/100 entry is considered the current weight and balance status of the basic aircraft.

6-6. WEIGHT AND BALANCE CLEARANCE FORM F, DD FORM 365-4.

Refer to TM 55-1500-342-23 for Form F, 365-4 instructions. Refer to table 6-1 through 6-5 and figure 6-2 for weight and balance data.

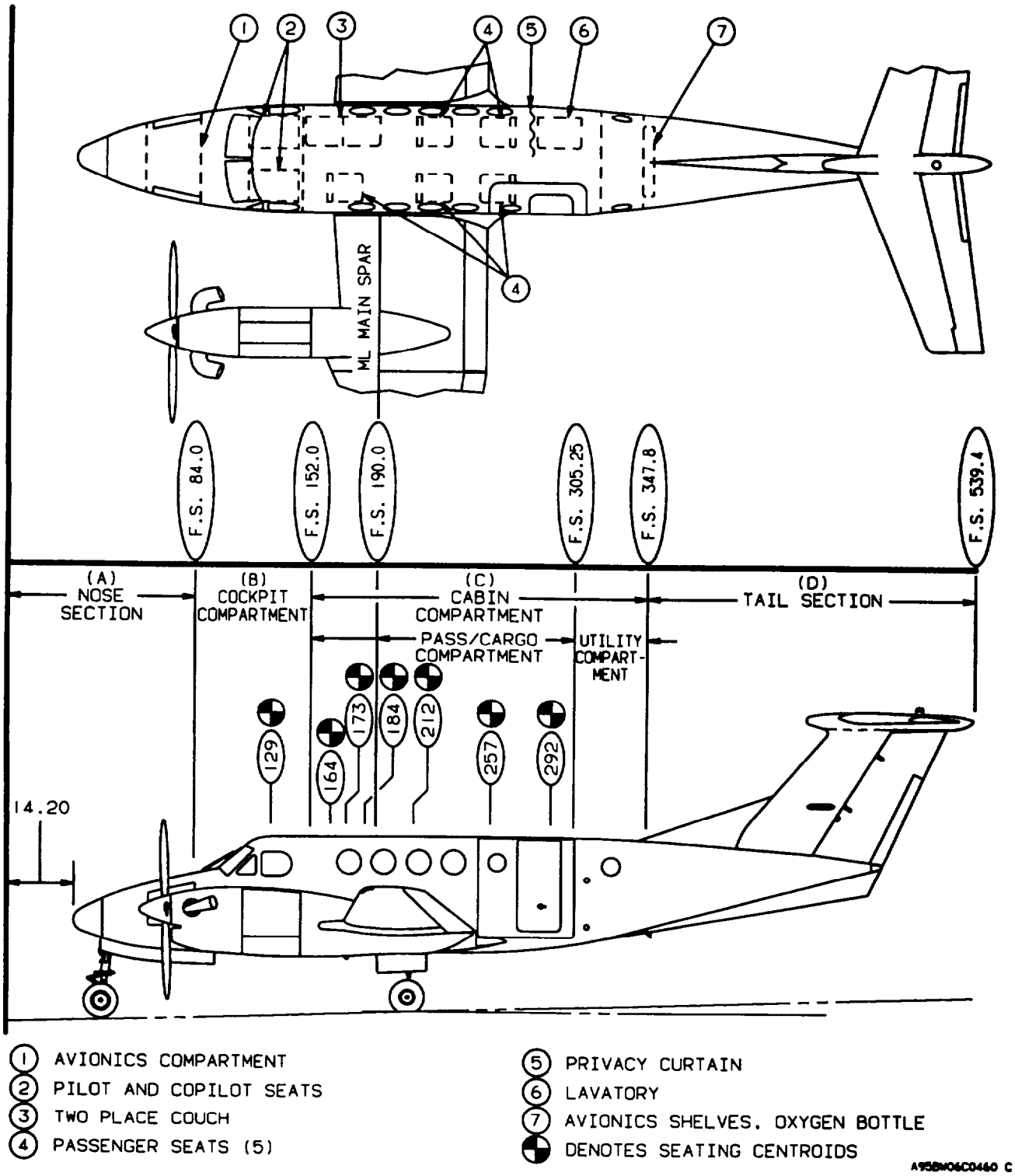

Figure 6-1. Aircraft Compartments and Stations

Table 6-1. Occupants - Useful Load Weights and Moments

WEIGHT	CREW	TWO PLACE COUCH		PASSENGER SEATS			LAVATORY
	F.S. 129	F.S. 164	F.S. 184	F.S. 173	F.S. 212	F.S. 257	F.S. 292
	MOMENT/ 100						
80	103	131	147	138	170	206	234
90	116	148	166	156	191	231	263
100	129	164	184	173	212	257	292
110	142	180	202	190	233	283	321
120	155	197	221	208	254	308	350
130	168	213	239	225	276	334	380
140	181	230	258	242	297	360	409
150	194	246	276	260	318	386	438
160	206	262	294	277	339	411	467
170	219	279	313	294	360	437	496
180	232	295	331	311	382	463	526
190	245	312	350	329	403	488	555
200	258	328	368	346	424	514	584
210	271	344	386	363	445	540	613
220	284	361	405	381	466	565	642
230	297	377	423	398	488	591	672
240	310	394	442	415	509	617	701
250	323	410	460	433	530	643	730

BT05528

Table 6-2. Baggage - Useful Load Weights and Moments

WEIGHT	AFT CABIN
	F.S. 325
	MOMENT/ 100
10	33
20	65
30	98
40	130
50	163
60	195
70	228
80	260
90	293
100	325
200	650
300	975
400	1300
500	1625
500	1788

BT05530

Table *6-3. Cargo - Useful Load Weights and Moments*

WEIGHT	CABIN			
	F.S. 152-188	F.S. 188-248	F.S. 248-305	F.S. 305-348
	CENTROID			
	F.S. 170	F.S. 218	F.S. 276	F.S. 325
	MOMENT/100			
10	17	22	28	33
20	34	44	55	65
30	51	65	83	98
40	68	87	110	130
50	85	109	138	163
60	102	131	166	195
70	119	153	193	228
80	136	174	221	260
90	153	196	248	293
100	170	218	276	325
200	340	436	552	650
300	510	654	828	975
400	680	872	1104	1300
500	850	1090	1380	1625
510	867	1112	1408	1658
550	935	1199	1518	1788
600	1020	1308	1656	
700	1190	1526	1932	
800	1360	1744	2208	
900		1962	2464	
1000	–	2180	2760	
1100	–	2398	3036	
1200	–	2616	3312	–
1300	–	2834	3588	
1370			3781	

NOTE: All cargo must be supported by the seat tracks in a uniform distribution and tied down to the tracks by an approved method

BT05529

Table 6-4. Useful Load Weights and Moments, Usable Fuel 6.4 to 6.7 LB/GAL

GAL-LONS	6.4 LB/GAL		6.5 LB/GAL		6.6 LB/GAL		6.7 LB/GAL	
	WEIGHT	MOMENT/ 100	WEIGHT	MOMENT/ 100	WEIGHT	MOMENT/ 100	WEIGHT	MOMENT/ 100
10	64	99	65	100	66	102	67	103
20	128	197	130	200	132	203	134	206
30	192	305	195	310	198	314	201	319
40	256	423	260	430	264	436	268	443
50	320	542	325	550	330	559	335	567
60	384	662	390	672	396	683	402	693
70	448	782	455	794	462	807	469	819
80	512	904	520	918	528	932	536	946
90	576	1023	585	1039	594	1055	603	1071
100	640	1142	650	1160	660	1178	670	1196
110	704	1260	715	1280	726	1300	737	1319
120	768	1379	780	1400	792	1422	804	1443
130	832	1496	845	1519	858	1543	871	1566
140	896	1615	910	1640	924	1665	938	1690
150	960	1734	975	1761	990	1788	1005	1815
160	1024	1852	1040	1881	1056	1910	1072	1939
170	1088	1971	1105	2002	1122	2033	1139	2064
180	1152	2090	1170	2122	1188	2155	1206	2188
190	1216	2209	1235	2244	1254	2279	1273	2313
200	1280	2328	1300	2365	1320	2401	1340	2437
210	1344	2447	1365	2486	1386	2524	1407	2562
220	1408	2567	1430	2607	1452	2647	1474	2687
230	1472	2686	1495	2728	1518	2770	1541	2812
240	1536	2806	1560	2850	1584	2894	1608	2938
250	1600	2926	1625	2971	1650	3017	1675	3063
260	1664	3045	1690	3093	1716	3140	1742	3188
270	1728	3164	1755	3213	1782	3263	1809	3312
280	1792	3283	1820	3334	1848	3386	1876	3437
290	1856	3402	1885	3455	1914	3508	1943	3562
300	1920	3521	1950	3576	1980	3631	2010	3686
310	1984	3641	2015	3698	2046	3754	2077	3811
320	2048	3760	2080	3819	2112	3878	2144	3936
330	2112	3880	2145	3940	2178	4001	2211	4062
340	2176	3999	2210	4062	2244	4124	2278	4187
350	2240	4119	2275	4184	2310	4248	2345	4312
360	2304	4244	2340	4310	2376	4377	2412	4443
370	2368	4365	2405	4434	2442	4502	2479	4570
380	2432	4489	2470	4560	2508	4630	2546	4700
386	2470	4562	2509	4634	2548	4706	2586	4776
400	2560	4741	2600	4815	2640	4889	2680	4963
410	2624	4869	2665	4945	2706	5021	2747	5097
420	2688	4997	2730	5075	2772	5153	2814	5231
430	2752	5126	2795	5206	2838	5286	2881	5336
440	2816	5255	2860	5337	2904	5419	2948	5501
450	2880	5386	2925	5470	2970	5554	3015	5638
460	2944	5514	2990	5600	3036	5686	3082	5773
470	3008	5645	3055	5733	3102	5821	3149	5909
480	3072	5775	3120	5866	3168	5956	3216	6046
490	3136	5907	3185	5999	3234	6091	3283	6184
500	3200	6040	3250	6134	3300	6229	3350	6323
510	3264	6172	3315	6269	3366	6365	3417	6462
520	3328	6307	3380	6405	3432	6504	3484	6602
530	3392	6441	3445	6542	3498	6643	3551	6743
540	3456	6573	3510	6676	3564	6779	3618	6881
544	3482	6626	3536	6729	3590	6832	3645	6936

BT05525

Section III. FUEL/OIL

6-9. FUEL LOAD.

Fuel loading imposes a restriction on the amount of load which can be carried. The required fuel must first be determined, then that weight subtracted from the total weight of crew and fuel. Weight up to and including the remaining allowable capacity can be subtracted directly from the weight of crew and fuel. As the fuel load is increased, the loading capacity is reduced. Figure 6-2 depicts the density variation of aviation fuel.

6-10. FUEL AND OIL DATA

a. Fuel Moment Tables. Tables 6-4 and 6-5 show usable fuel moment/100 for U.S. gallons or pounds of fuel at specific weights from 6.4 to 6.8 lbs/gal.

The full tank usable fuel weight will vary depending upon fuel specific weight. The fuel quantity indicator is calibrated for correct indication when using JP-5 or JP-8. When using other fuels multiply the indicated fuel quantity in pounds by .99 for JP-4 or by .98 for aviation gasoline (100/130).

Figure 6-2 is provided to show the general range of fuel specific weights to be expected with change in fuel temperature. Specific weight may also vary between lots of the same type fuel at the same temperature by as much as 0.5 lb/gal. These fuel specific weights at 15°C may be used for most mission planning:

Table 6-5. Useful Load Weights and Moments, Usable Fuel 6.8 LB/GAL

GALLONS	6.8 LB/GAL		GALLONS	6.8 LB/GAL	
	WEIGHT	MOMENT1 100		WEIGHT	MOMENT/ 100
10	68	105	310	2108	3868
20	136	209	320	2176	3995
30	204	324	330	2244	4123
40	272	450	340	2312	4249
50	340	575	350	2380	4376
60	408	703	360	2448	4509
70	476	831	370	2516	4638
80	544	960	380	2564	4770
90	612	1087	386	2625	4848
100	680	1214	400	2720	5037
110	748	1339	410	2788	5173
120	816	1465	420	2856	5309
130	884	1589	430	2924	5446
140	952	1715	440	2992	5583
150	1020	1842	450	3060	5722
160	1088	1968	460	3128	5859
170	1156	2095	470	3196	5997
180	1224	2221	480	3264	6136
190	1292	2348	490	3332	6276
200	1360	2473	500	3400	6418
210	1428	2600	510	3468	6558
220	1496	2727	520	3536	6700
230	1564	2854	530	3604	6644
240	1632	2982	540	3672	6984
250	1700	3109	544	3699	7039
260	1768	3236			
270	1836	3361			
280	1904	3488			
290	1972	3615			
300	2040	3741			

BT05527

DENSITY VARIATION OF AVIATION FUEL
BASED ON AVERAGE SPECIFIC GRAVITY

FUEL	AVERAGE SPECIFIC GRAVITY
JET A (JP-5) (JP-8) AND JET A1	0.819 AT 15°C
JET B (JP-4)	0.764 AT 15°C
AV GAS GRADE 100/130	0.706 AT 15°C

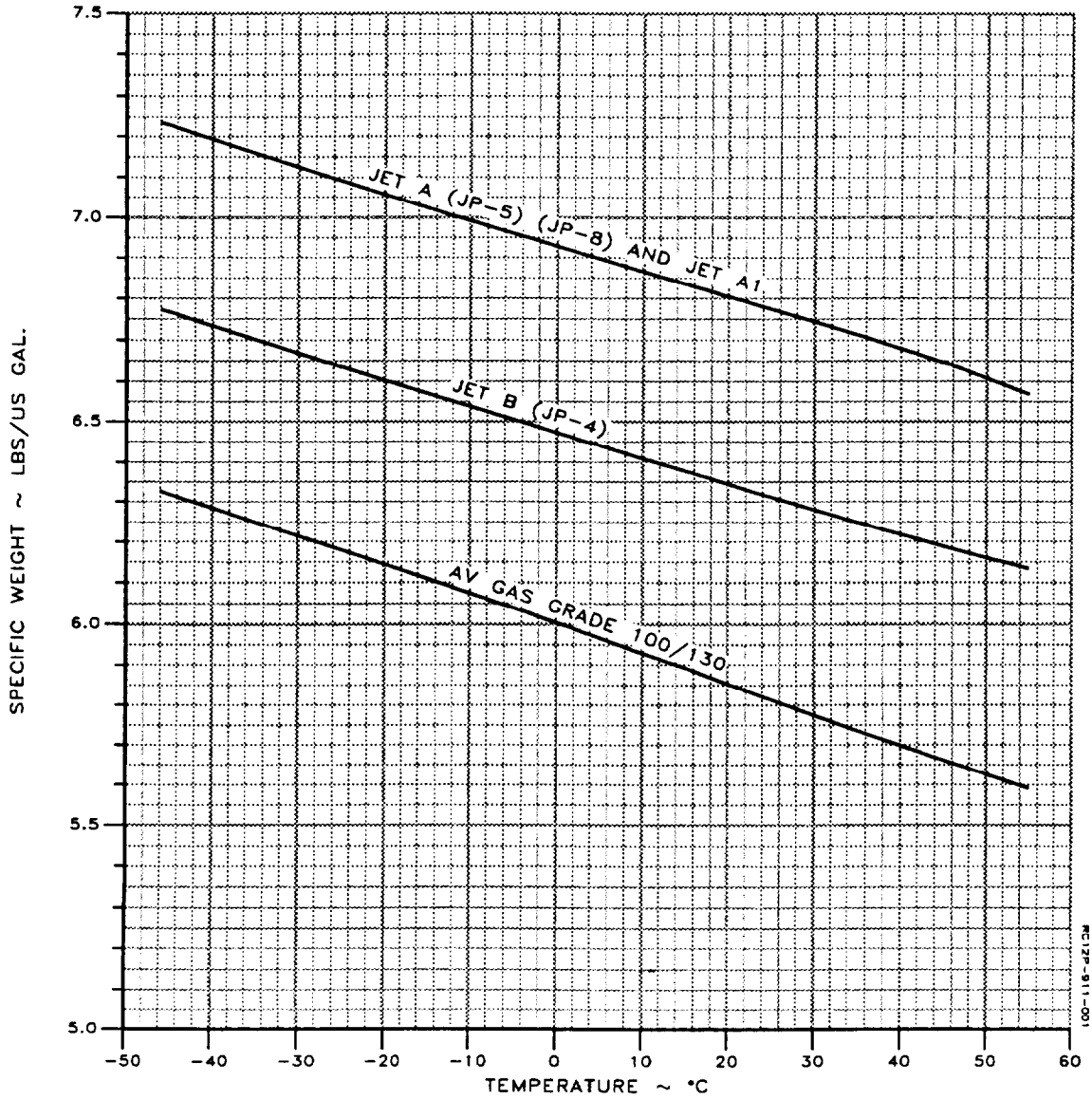

Figure 6-2. Density Variation of Aviation Fuel

Fuel Type, Specific Weight

JP-4 = 6.5 lb/gal

JP-5 = 6.8 lb/gal

JP-8 = 6.7 lb/gal

b. Oil Data. Total oil weight is 52 pounds and is included in the basic weight of the aircraft.

Section IV. PERSONNEL

6-11. CABIN AREA.

a. Cabin. The cabin extends from the back of the cockpit partition to the aft cabin wall (fig. 2-2). This area provides 253.0 cubic feet of space. The cabin is 57.0 inches high and 54.0 inches wide. Access is gained through the entrance door, which measures 51.5 inches high and 26.7 inches wide. The cabin section flooring will withstand a loading of 200 pounds per square foot for items supported on the seat tracks. Floor areas where seat tracks are not present (walkways and aft baggage/utility area) will only support 100 pounds per square foot floor loads.

b. Standard Seating Arrangement. Seating is provided for 8 passengers. Seating configuration is shown in figure 2-2. A two place couch is installed aft of the cockpit partition on the right side. Five forward facing seats are installed with two on the right side and three on the left. These seats may be installed facing aft. A side facing toilet is installed accross from the cabin entrance door, separated from the passenger area by a partition. A seat belt is provided and seating one passenger is allowed in the toilet area. A baggage storage area is provided in the farthest aft portion of the cabin.

6-12. PERSONNEL LOADING AND UNLOADING.

a. Seat Installation. The seats are mounted on full length seat tracks to provide for quick removal and reconfiguration of seats. The arm rests adjacent to the aisle may be lowered to allow ease of entry. The seats have reclining backs that may be adjusted for individual comfort. Each seat back must be in the full upright position for takeoff and landing.

b. Seat Belts and Shoulder Harnesses. The pilot's and copilot's seats are equipped with shoulder harnesses. The belt for the shoulder harness is in a Y configuration with a single strap contained in an inertia reel attached to the seat back. One strap is worn over each shoulder and fastened by metal loops to the seat belt buckle. Spring loading of the inertia reel allows normal movement. A locking device will secure the harness in the event of sudden forward movement or impact action. Each passenger seat is equipped with a lap seat belt and an over the shoulder restraining belt.

6-13. PERSONNEL LOAD COMPUTATION.

When aircraft are operated at critical gross weights, the exact weight of each individual occupant plus equipment should be used. If weighing facilities are not available, or if the tactical situation dictates otherwise, loads shall be computed as follows:

a. Combat Equipped Soldiers. Combat equipped soldiers shall be computed at 275 pounds per individual.

b. Combat Equipped Paratroopers. Combat equipped paratroopers shall be computed at 320 pounds per individual.

c. Crew and Passengers. Crew and passengers with no equipment shall be computed according to each individual's estimate.

Section V. MISSION EQUIPMENT

Not applicable.

Section VI. CARGO LOADING

6-14. AIR CARGO FEATURES.

The 245 cubic foot cabin area is easily converted for mixed or all cargo use, by removal of passenger seats and a partial partition (fig. 2-2). A top-hinged cargo door with an opening of 52 inches wide by 52 inches high, is provided on the left side of the fuselage to admit bulk cargo. The floor is designed to support 200 pounds per square foot when supported by the seat tracks. The areas where seat track support is not possible will support 100 pounds per square foot floor loading. Seat tracks are to be used for securing cargo containers.

6-15. AERIAL DELIVERY SYSTEM.

WARNING

Procedures for aerial delivery of personel and cargo have not been developed.

The cargo door is a structural panel and shall be closed for flight.

There are no provisions for static lines; however, free-fall parachute operations may be accomplished. The cabin door may be removed for flight by installing Beech Aircraft Corp. Kit 100-4006. Flights with the door removed must be in accordance with the Federal Aviation Administration approved flight manual supplement which accompanies this kit.

6-16. PREPARATION OF GENERAL CARGO.

Before loading cargo, loading personnel should determine such data as weight, dimensions, center of gravity, and contact areas of the individual cargo items for use in positioning the load.

6-17. CARGO CENTER OF GRAVITY PLANNING.

The cargo loading shall be planned so that the center of gravity of the loaded aircraft will fall within the operating limits shown on the Center of Gravity Loading Diagram (fig. 6-3). Cargo moment may be determined by using the Cargo Moment chart (fig. 6-4).

6-16. LOAD PLANNING.

The basic factors to be considered in any loading situation are as follows:

a. Cargo shall be arranged to permit access to all emergency equipment and exits during flight.

b. The cabin section flooring will withstand a loading of 200 pounds per square foot for items supported on the seat tracks. Floor areas where seat tracks are not present (walkways and aft baggage/utility area) will only support 100 pound per square foot floor loads. Shorings shall be used to distribute highly condensed weights evenly over the cargo areas. Use of the floor seat tracks to support loads is encouraged where possible.

c. All cargo shall be adequately secured to prevent damage to the aircraft, other cargo, or the item itself.

6-19. LOADING PROCEDURE.

NOTE

The cabin airstair door is weight limited to a maximum of 300 pounds to prevent possible structural damage.

Loading of cargo is accomplished through the cabin door (21.5 in. X 50.0 in.) or the cargo door (49 in. X 52 in.).

6-20. SECURING LOADS.

All cargo shall be secured with restraints strong enough to withstand the maximum force exerted in any direction. The maximum force can be determined by multiplying the weight of the cargo item by the applicable load factor. These established load factors (the ratio between the total force and the weight of the cargo item) are 1.5 to the side and rear, 3.0 up, 6.6 down, and 9.0 forward.

6-21. RESTRAINT DEVICES.

The aircraft is equipped with full length seat tracks which are used to support the cargo and provide attachment points for the cargo tiedown devices (fig. 6-10). When cargo is properly secured by tiedown devices, it will be restrained from moving in any direction within the aircraft.

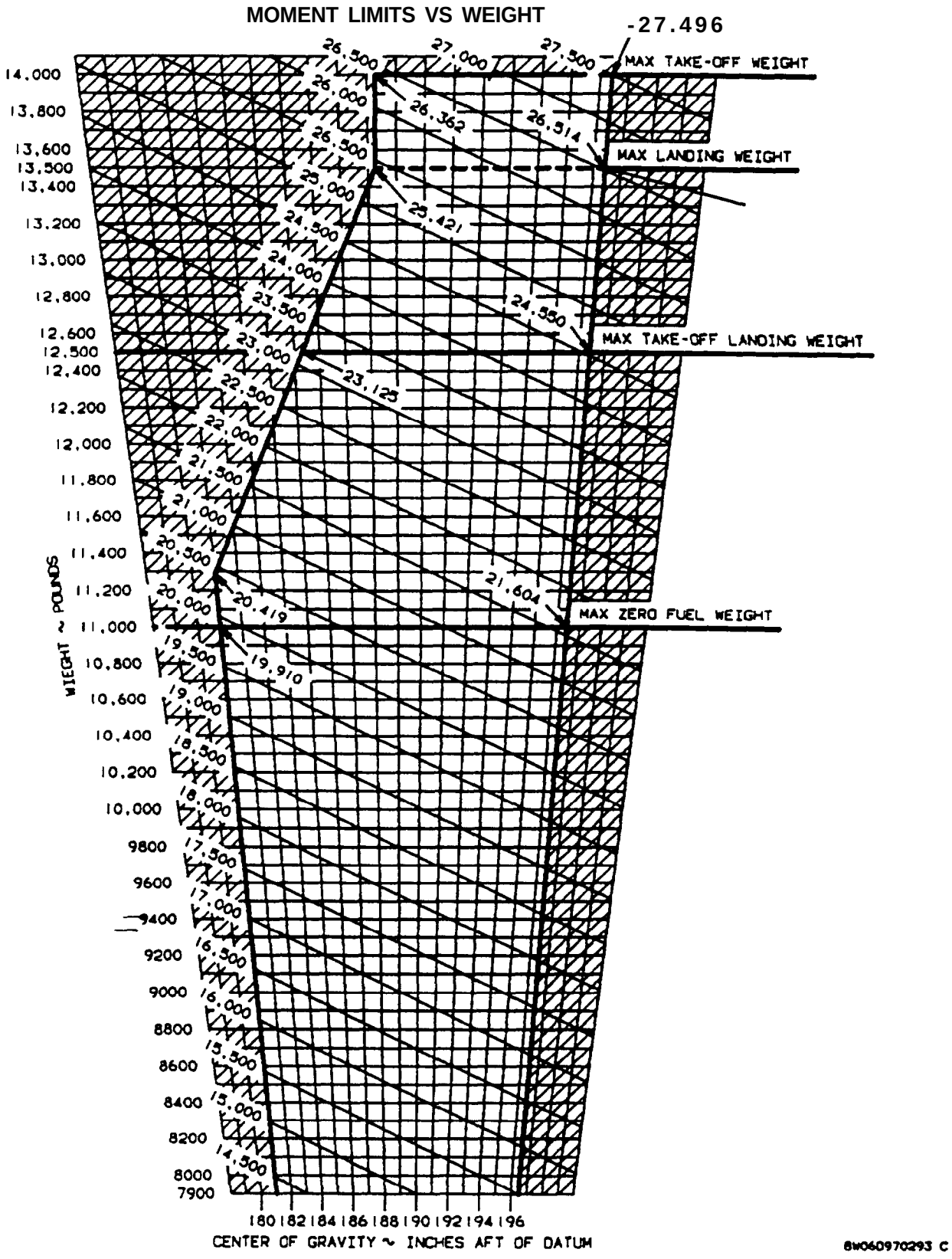

Figure 6-3. Center of Gravity Loading Diagram

CARGO MOMENT

WARNING

OPERATION OF THIS AIRCRAFT (IN THE CARGO CONFIGURATION) WITH PILOT AND CO-PILOT ONLY MAY EXCEED THE FORWARD C.G. LIMIT. ADD BAGGAGE AND/OR REMOVABLE BALLAST IN AFT BAGGAGE COMPARTMENT AS REQUIRED UP TO ALLOWABLE MAXIMUM.

EXAMPLE

WANTED
CARGO MOMENT

KNOWN
CARGO WEIGHT - 500 LBS.
CARGO LOCATION - F.S. 218

METHOD
ENTER WEIGHT OF CARG
MOVE RIGHT TO CARGO LOCATION.
MOVE DOWN TO READ MOMENT/100 - 1090

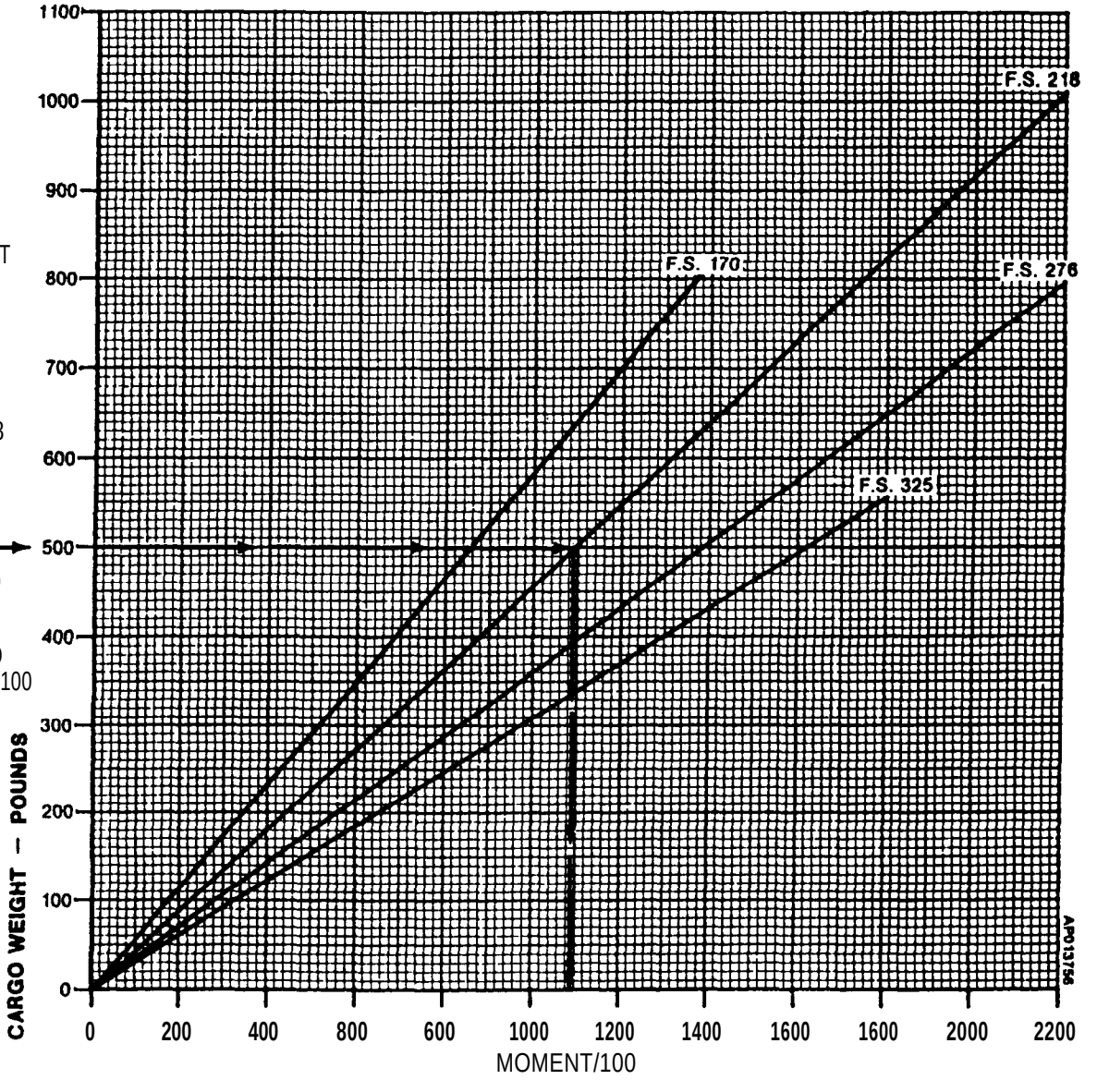

Figure 6-4. Cargo Moment Diagram

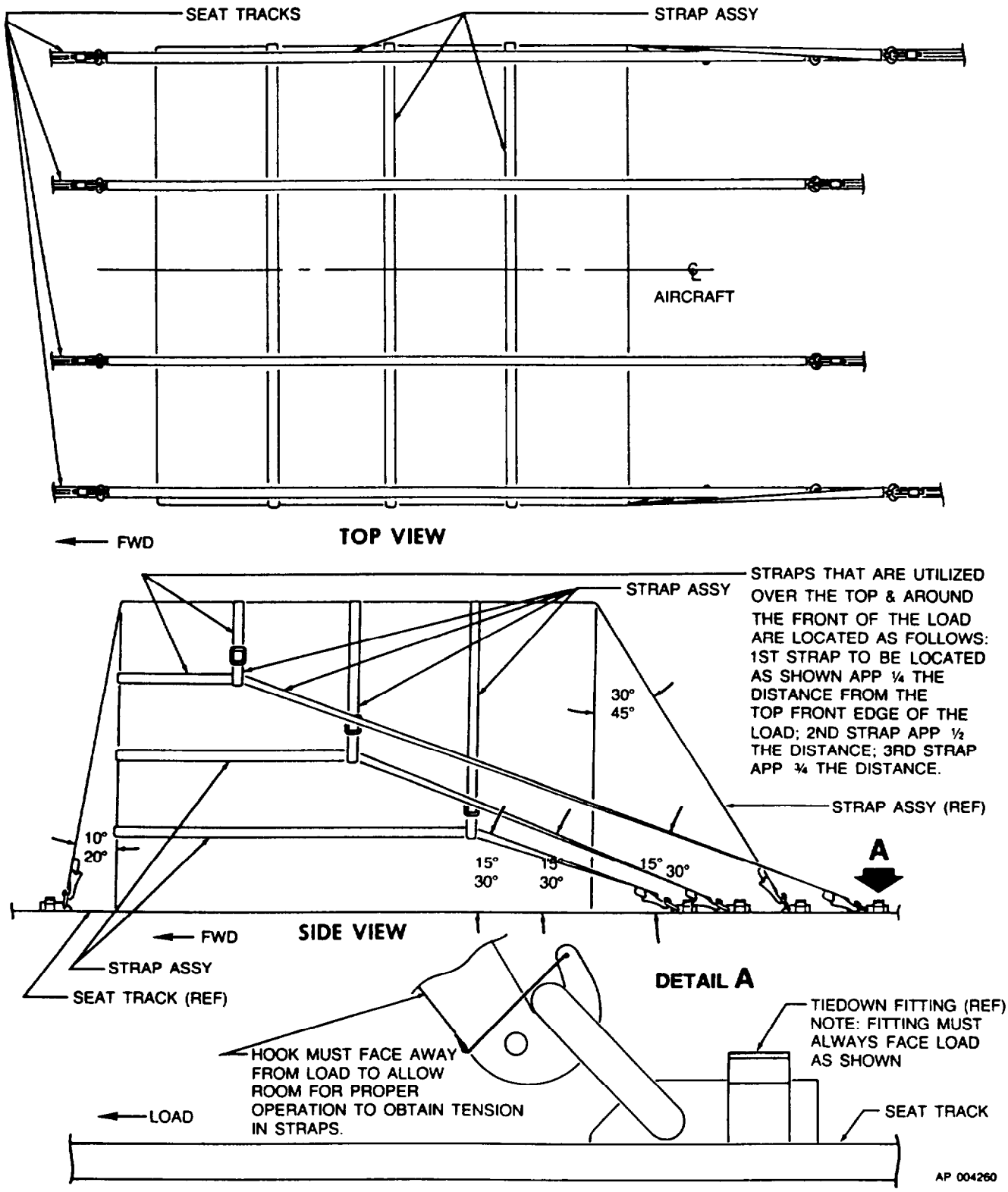

Figure 6-5. Cargo Restraint and Tiedown Method

6-22. CARGO RESTRAINING METHOD.

CAUTION

To avoid structural damage all cargo shall be restrained in accordance with Beech Kit Drawing No. 101-5040, which provides the correct methods for restraint and approved hardware.

Cargo is restrained by passing tiedown devices over and around the cargo and attaching the ends of the tiedown device to the seat tracks as shown in figure 6-5. The number of tiedown devices required to restrain a given weight of cargo may vary.

6-23. CARGO UNLOADING.

Unloading of cargo shall be accomplished through the cabin door, or cargo door.

Section VII. CENTER OF GRAVITY

6-24. CENTER OF GRAVITY LIMITATIONS.

Center of gravity limitations are expressed in arm inches, which refers to a positive measurement from the aircraft' s reference datum. The forward CG limit at 12,500 pounds is 185.0 arm inches with straight line variation to 181.0 inches aft of datum at 11,279 pounds. The aft CG limit is 196.4 inches aft of datum at all weights. The Center of Gravity Loading Diagram is designed to established forward and aft CG limitations.

CHAPTER 7

PERFORMANCE

7-1. INTRODUCTION TO PERFORMANCE.

The graphs and tables in this chapter present performance information for takeoff, climb, landing, and flight planning at various parameters of weight, power, altitude, and temperature. Normal Category operations have been assumed. Examples explaining appropriate use are provided for performance graphs.

7-2. HOW TO USE GRAPHS.

1. All airspeed and references to airspeeds in this chapter are indicated airspeeds unless otherwise noted.

2. A reference line indicates where to begin following the guidelines. Always project to the reference line first, then follow the guidelines to the next item by maintaining the same proportional distance between the guideline above and the guideline below the projected line. For instance, if the projected line intersects the reference line in the ratio of 30% down/70% up between the guidelines, then maintain this same 30%/70% relationship between the guidelines all the way to the next item.

3. The Airspeed Calibration - Normal System - Takeoff Ground Roll graph was used to obtain V_1 and V_R indicated airspeeds (IAS). All other indicated airspeeds were obtained by using the Airspeed Calibration - Normal System graph.

4. In addition to presenting the answer for a particular set of conditions, the example on a graph also presents the order in which the various scales on the graph should be used. For instance, if the first item in the example is OAT, then enter the graph at the known OAT.

5. The associated conditions define the specific conditions from which performance parameters have been determined. They are not intended to be used as instructions; however, performance values determined from charts can be achieved only if the specified conditions exist.

6. The graphs assume that the full amount of usable fuel is available for all approved flight conditions.

7. Notes have been provided on various graphs and tables to approximate performance with ice vanes extended. The effect will vary, depending upon airspeed, temperature, altitude, and ambient conditions. At lower altitudes, where operation on the torque limit is possible, the effect of ice vane extension will be less, depending upon how much power can be recovered after the ice vanes have been extended.

8. Shaded areas on various graphs and tables within this chapter apply to aircraft operating weights limited to Restricted Category operation only.

7-3. EXAMPLES.

The following example presents calculations for flight time, block speed, and fuel required for a proposed flight from Denver, Colorado, to Reno, Nevada, at FL 260, using the conditions listed below, except as noted.

a. Conditions. At Stapleton International (DEN):

Outside Air Temperature ..... 28°C (82°F)

Field Elevation ..... 5333 feet[1]

Altimeter Setting ..... 29.82 in. Hg

Wind ..... 330° at 10 knots

Runway 35L Length ..... 11,500 feet[1]

Route of Trip[2]: DEN - J116 - EKR - J173 - SLC - J154 - BAM - J32 - RNO

Route segment data:

To determine the pressure altitude at origin and destination airports, add 1000 feet to field elevation for each 1.00 in. Hg that the reported altimeter setting value is below 29.92 in. Hg, and subtract 1000 feet for each 1.00 in. Hg above 29.92 in. Hg. First, find the difference between 29.92 in. Hg and the reported altimeter setting. Then multiply the answer by 1000 to find the difference in feet between field elevation and pressure altitude.

Pressure Altitude at DEN:

29.92 in. Hg - 29.82 in. Hg = 0.10

0.10 X 1000 feet = 100 feet

The pressure altitude at DEN is 100 feet above field elevation.

Pressure Altitude at DEN = 5333 + 100 = 5433 feet.

Pressure Altitude at RNO:

29.92 in. Hg - 29.60 in. Hg = 0.32

0.32 X 1000 feet = 320 feet

The pressure altitude at RN0 is 320 feet above field elevation.

Pressure Altitude at RN0 = 4412 + 320 = 4732 feet.

7- 4. PERFORMANCE EXAMPLE.

a. Take-Off Weight. Maximum take-off weight limit (Chapter 5) = 12,500 pounds.

A summary of graphs is provided in this chapter to restrict take-off weight as follows:

1. Maximum Take-Off Weight Permitted By Entoute Climb Requirement (no restriction)
2. Take-Off Weight To Achieve Positive One-Engine-Inoperative Climb At Lift-Off (separate graphs for flaps **UP** and flaps **APPROACH)**

(1) Take-Off Weight to Achieve Positive One-Engine-Inoperative Climb at Lift-Off (fig. 7-12 and 7-13). Enter the graphs at 5433 feet and 28°C to determine the maximum weight at which the accelerate-go procedures should be attempted.

Maximum Accelerate-Go Weight (Flaps UP)....12,500 pounds

Maximum Accelerate-Go Weight **(Flaps APPROACH)** . . . . . 12,340 pounds

From the Time, Fuel, And Distance To Climb graph (fig. 7-30), the time, fuel, and distance required to climb from 5433 feet (28°C) to 18,000 feet (-6°C) are:

Time . . . . . .11 - 3 = 8 minutes

Fuel ..... 153 - 43 = 110 pounds

Distance ..... 31- 7 = 24 nautical miles

The requirements for limiting weight involves the selection from the Take-Off Weight graphs of the most adverse conditions of:

One-engine - inoperative climb

Field length to accelerate-stop

Field length to accelerate-go

The take-off flight path required to clear known obstacles beyond the runway

The performance graphs associated with the above conditions are:

Accelerate-Stop graphs

Accelerate-Go graphs

Net Gradient Of Climb graphs

Take-Off Flight Path graph

The performance presented using these criteria is predicated on the autofeather system being armed and operable. The Ground Minimum Control Speed (V_{MCG}) has been determined to be 84 knots. At this speed, control within 25 feet of the runway center line is possible.

The following example illustrates the procedures required to obtain a take-off weight value using the conditions specified below, and illustrated by the Take-Off Flight Path Diagram (fig. 7-1).

Conditions (these conditions do not pertain to any particular airport location):

Outside Air Temperature . . . . . **28°C** (82°F)

Field Elevation . . . . . 5330 feet

Altimeter Setting . . . . . 29.82 in. Hg

Table 7-1. Route Segment Data [2]

ROUTE SEGMENT	MAGNETIC COURSE	MAGNETIC VARIATION	DISTANCE N M	WIND AT FL 260 DIR KNOTS	OAT AT FL 260°C	OAT AT [3] 18,000 FT °C	ALTIMETER SETTING IN. HG
DEN - EKR	265°	13°E	143[4]	350°/40	-10	-6	29.82
EKR - SLC	270°	15°E	192	350°.40	-10	-6	29.82
SLC - BVL	249°	16°E	81	340°/35	-20	0	29.75
BVL - BAM	250°	16°E	145	340°/35	-20	0	29.75
BAM - RN0	227°	17°E	146[4]	290°/45	-20	-4	29.60

[2] Source: Jeppesen High Enroute Chart US (HI) 2, Oct 24-80.
[3] To illustrate the MEA requirement, the floor of the Jet Airways (18,000 ft MSL) was used in this example.
[4] Includes distance between airport and VORTAC, per Jeppesen Airport Directory, 1978.

BT05566

Surface Wind . . . . . 140° at 11 knots

Runway 17 Length . . . . . .6486 feet

Pressure Altitude (29.92 - 29.82 = 0.10 in. Hg) 5330 + 100 . . . . . 5430 feet

Headwind Component (from Wind Components graph) . . . . . 9.5 knots

Obstacles (height above runway):

20-foot-high wires 300 feet beyond end of runway

175-foot-high ridge 3000 feet beyond end of runway

b. Take-Off Flight Path.

1. From the Accelerate-Stop graphs, using 12,500 pounds with flaps **UP,** and 12,000 pounds with flaps **APPROACH,** determine that the resulting distances are less than the runway length. Therefore, accelerate-stop is not a limiting factor.
2. From the Accelerate-Go graphs, using 12,500 pounds with flaps **UP,** and 12,000 pounds with flaps **APPROACH,** determine that the resulting distances are greater than the available accelerate-go distance of 6786 feet. (Refer to the Take-Off Flight Path Diagram .)
3. Using the Accelerate-Go graphs, enter in reverse using the 6786 feet value and determine the weight for which this accelerate-go distance is possible.
   a. Take-off weight of 10,600 pounds with flaps **UP**
   b. Take-off weight of 11,380 pounds with flaps **APPROACH**
4. Enter the Take-Off Flight Path graph (fig. 7-16), to determine the minimum gradient of climb which will result in a flight path clear of the 175-foot-high ridge 3000 feet beyond the end of the runway.
   a. Ridge = 175 feet AGL
   b. From reference zero (9486 - 6786) = 2700 feet
   c. Minimum gradient of climb = 5.2%

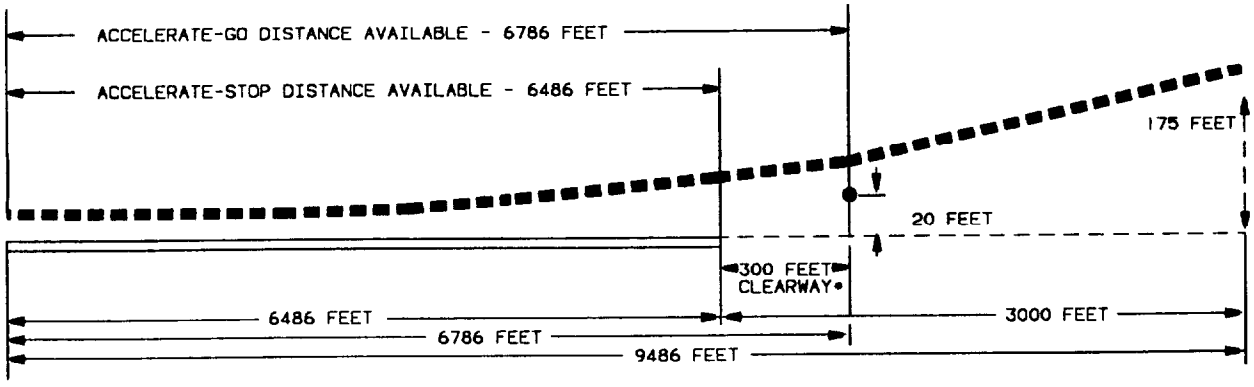

*THE MAXIMUM ALLOWABLE CLEARWAY FOR THIS RUNWAY IS 1621 FEET (25% OF 6486).

A968W07D0374 C

Figure 7-1. Take-Off Flight Path Diagram

5. Enter the Net Gradient Of Climb - Flaps **UP** graph (fig. 7-21) at 10,600 pounds, and the Net Gradient Of Climb - Flaps **APPROACH** graph (fig. 7-25) at 11,380 pounds.

Both resulting gradients are less than 5.2%.

6. Enter in reverse the Net Gradient Of Climb graphs using the 5.2% net gradient of climb value to determine the weights for which a climb at this value is possible.

   a. Flaps UP = 9700 pounds

   b. Flaps APPROACH = 9000 pounds

7. Using the weight of 9700 pounds with flaps **UP,** and 9000 pounds with flaps **APPROACH,** the accelerate-go distance will be shortened. This in turn will decrease the minimum gradient of climb value required to clear the ridge. The allowable take-off weights to meet these requirements are between 10,600 pounds and 9700 pounds with flaps **UP,** or between 11,380 pounds and 9000 pounds with flaps **APPROACH.** Exact weight can be determined by an iterative process of assuming new weight halfway between these weights and using the procedures outlined in Steps 3, 5, 6, 7, and 8. Determine new weights for first iteration as follows:

   a. Flaps **UP:**
   10,600 - 9700 = 900 + 2 = 450 + 9700 = 10,150 pounds

   b. Flaps **APPROACH** 11,380 - 9000 = 2380 + 2 = 1190 + 9000 = 10,190 pounds

8. (Step 3 procedures): From the Accelerate-Go graphs, using 10,150 pounds for flaps **UP** 90 pounds for flaps **APPROACH,** the resulting distances are within the available accelerate-go distance of 6786 feet.

   a. 6050 feet with flaps UP

   b. 5000 feet with flaps APPROACH

9. (Step 5 procedure): Enter the Take-Off Flight Path graph and adjust the horizontal distance from Reference Zero. Determine minimum gradient of climb.

   a. Flaps UP - From reference zero (9486 - 6050) = 3436 feet
   Minimum gradient of climb = 4.0%

   b. Flaps **APPROACH** - From reference zero (9486 - 5000) = 4486 feet
   Minimum gradient of climb = 3.1%

10. (Step 6 procedures): Enter the Net Gradient Of Climb - Flaps **UP** graph at 10,150 pounds for a 4.7% net gradient of climb. Enter the Net Gradient Of Climb - Flaps **APPROACH** graph at 10,190 pounds for a 3.5% net gradient of climb.

    a. Since these results are greater than the minimum value, the take-off weights of 10,150 pounds with flaps up or 10,190 pounds with flaps **APPROACH** may be used.

    b. If an exact value is required, complete the next step and repeat Steps 3, 5, 6, 7, and 8.

11. (Step 7 procedures): Enter in reverse the Net Gradient Of Climb - Flaps **UP** graph using minimum gradient of climb of 4.0% for a take-off weight of 10,800 pounds, and the Net Gradient Of Climb - Flaps **APPROACH** graph using minimum gradient of climb of 3.1% for a take-off weight of 10,550 pounds.

12. (Step 8 procedures): Use the weights of Step 8 and Step 12 to obtain a new assumed weight.

    a. Flaps **UP**
    10,800 - 10,150 = 650 + 2 = 325 + 10,150 = 10,475 pounds

    b. Flaps **APPROACH**
    10,550 - 10,190 = 360 + 2 = 180 + 10,190 = 10,370 pounds

Use these assumed weights for second iteration.

13. After several additional iterations, the exact weights which will satisfy all the given conditions are:

    a. Flaps **UP** = 10,310 pounds with a 4.5% net gradient of climb.

    b. Flaps **APPROACH** = 10,360 pounds with a 3.3% net gradient of climb.

The fuel quantity required for start and taxi can be added to these weights.

c. Take-OfF Distance. Enter the Take-Off Distance graphs (fig. 7-18 and 7-22) at 28°C, 5433 feet pressure altitude, 12,500 pounds, and 9.5 knots headwind component and obtain the following results:

Ground Roll (flaps UP) . . . . . 3800 feet

Ground Roll (flaps APPROACH).....2600 feet

Total Distance Over 50-foot Obstacle . ...5100 feet (flaps **UP)** or 3750 feet (flaps **APPROACH)**

Take-Off Speed:

At Rotation .....111 knots (96 knots, flaps **APPROACH)**

At 50 Feet..... 121 knots (105 knots, flaps **UP)**

d. Flight Planning. The following calculations provide information for flight planning at various parameters of weight, power, altitude, and temperature. Graphs and tables are included for: time, fuel, and distance to climb; time, fuel, and distance to descend; normal cruise power at 1700 RPM; maximum cruise power at 1700 RPM, normal cruise power at 1800 RPM; maximum cruise power at 1800 RPM; maximum range power at 1700 RPM; and holding time.

Calculations for flight time, block speed, and fuel requirements for a proposed flight are detailed below.

Enter the ISA Conversion graph at the conditions indicated:

DEN

Pressure Altitude ..... 5433 feet

OAT .....28°C

ISA Condition .....ISA + 23°C

DEN - SLC

Pressure Altitude ..... 26,000 feet

OAT .....-10°C

ISA Condition .....ISA + 27°C

SLC - RN0

Pressure Altitude ..... 26,000 feet

OAT .....-20°C

ISA Condition..... ISA + 17°C

RN0

Pressure Altitude.....4732 feet

OAT..... 32°C

ISA Condition..... ISA + 27°C

Enter the Time, Fuel, and Distance To Climb graph (fig. 7-30) at 28°C, to 5433 feet and to 12,500 pounds, and enter again at -lO°C, to 26,000 feet and to 12,500 pounds, and read:

Time to Climb .....21 - 3 = 18 min

Fuel Used to Climb . . . . . 265 - 43 = 222 pounds

Distance Traveled .....63 - 8 = 55 nautical miles

Enter the Time, Fuel, and Distance To Descend graph at 26,000 feet, and enter again at 4732 feet, and read:

Time to Descend .....17 - 3 = 14 min

Fuel Used to Descend ..... 148 - 34 = 114 pounds

Distance to Descend...78 - 13 = 65 nautical miles

The estimated average cruise weight is approximately 11,600 pounds.

Enter the tables for Normal Cruise Power at 1800 RPM for ISA + 10°C, ISA + 2O°C, and ISA + 3O°C, and read the cruise airspeeds for 26,000 feet at 12,000 pounds and 11,000 pounds.

Interpolate between these speeds for ISA + 27°C and ISA + 17°C at 11,600 pounds.

Cruise True Airspeed (ISA + 27°C).....269 knots

Cruise True Airspeed (ISA + 17°C) . . . .273 knots

Enter the Normal Cruise Power At 1800 RPM graph at 26,000 feet and read the recommended torque settings for ISA + 27°C (-3°C IOAT) and ISA + 17°C (-13°C IOAT):

ISA + 27°C (-3°C IOAT) ...1424 ft-lbs torque per engine

ISA + 17°C (-13°C IOAT) .1492 ft-lbs torque per engine

Enter the Fuel Flow At Normal Cruise Power AT 1800 RPM graph at 26,000 feet and read the fuel flow

For ISA + 27°C (-3°C IOAT):

Fuel Flow Per Engine .....261 lbs/hr

Table 7-2. Cruise True Airspeeds at FL 260

12,000 POUNDS			11,000 POUNDS		
ISA+ 10°C	ISA+20°C	ISA + 30°C	ISA + 10°C	ISA + 20ºC	ISA + 30°C
272	270	266	277	274	272

BT05567

Total Fuel Flow.....522 lbs/hr

For ISA + 17°C (-13°C IOAT):

Fuel Flow Per Engine..... 272 lbs/hr

Total Fuel Flow .....544 lbs/hr

NOTE

For flight planning, enter these graphs at the forecasted ISA condition; for enroute power settings and fuel flow, enter the graphs at the actual IOAT.

Time and Fuel used were calculated at Normal Cruise Power at 1800 RPM as follows:

Time = Distance + Ground Speed

Fuel Used = Time X Total Fuel Flow

(1) Reserve Fuel. Reserve Fuel (45 minutes at Maximum Range Power): Assume weight at end of cruise to be 11,000 pounds. Enter the tables for Maximum Reserve Fuel (45 minutes at maximum range power): Assume weight at and ISA + 20°C, and read the fuel flow for 26,000 feet at 11,000 pounds:

ISA + 10°C .....416 lbs./hr Total Fuel Flow

ISA + 20°C .....416 lbs/hr Total Fuel Flow

Interpolate to find fuel flow at ISA + 17°C:

Total fuel flow for reserve = 416 + 0 = 416 lbs/hr

Reserve Fuel = 45 minutes +60 X 416 lbs/hr = 312 lbs

(2) Total Fuel Requirement. 1662 lbs + 312 lbs = 1974 lbs

(3) Zero Fuel Weight Limitation. For this example, the following conditions were assumed:

Ramp Weight.....12,590 pounds

Weight of Usable Fuel On Board.....1974 pounds

Zero Fuel Weight = Ramp Weight - Weight of Usable Fuel Onboard

Zero Fuel Weight = 12,590 - 1974 = 10,616 pounds

Maximum Zero Fuel Weight (from Chapter 5).....11,000 pounds

Maximum zero fuel weight limitation has not been exceeded.

Anytime the zero fuel weight exceeds the maximum zero fuel weight limit by X amount, at least X pounds of payload must be off-loaded. If desired, additional fuel may then be added until the maximum ramp weight limitation of 12,590 pounds is again reached.

e. Landing Information. The estimated Landing Weight is determined by subtracting the fuel required for the trip from the Ramp Weight:

Ramp Weight .....12,590 pounds

Fuel Required for Total Trip.....1662 pounds

Landing Weight (12,590 - 1662)....10,928 pounds

NOTE

For the remainder of this example, a landing weight of 10,854 pounds has been assumed.

Enter the Normal Landing Distance Without Propeller Reversing - Flaps DOWN graph (fig. 7-116) at 32°C, 4732 feet, 10,854 pounds, and 4.7 knots headwind component:

Ground Roll .....1850 feet

Total Over 50-foot Obstacle .....3000 feet

Approach Speed .....99 knots

Table 7-3. Cruise Performance Results

ROUTE	DISTANCE	ESTIMATED GROUND SPEED	TIME AT CRUISE ALTITUDE	FUEL USED FOR CRUISE
	NM	KNOTS	HRS : MIN	LBS
DEN - EKR	88*	254	:21	181
EKR - SLC	192	250	:46	401
SLC - BVL	81	262	:19	168
BVL - BAM	145	261	:33	302
BAM - RNO	81*	240	:20	184

* Distance required to climb or descend has been subtracted from segment distance.

BT05565

Enter the Climb - Balked Landing graph (fig. 7-115) at 32°C, 4732 feet, and 10,854 pounds:

Rate of Climb ..... 1420 feet per minute

Climb Gradient 14.4%

Table 7-4. Time, fuel, and Distance Results

ITEM	TIME HRS : MINS	FUEL POUNDS	DISTANCE NM
Start, Runup, Taxi, and Take-Off acceleration	00 : 00	90	0
Climb	00 : 18	222	55
Cruise	2 : 19	1236	587
Descent	00 : 14	114	65
TOTAL	2 : 51	1662	707
Block Speed: 707 NM ÷ 2 hours, 51 minutes = 248 knots			

BT05564

AIRSPEED CALIBRATION - NORMAL SYSTEM

TAKE-OFF GROUND ROLL

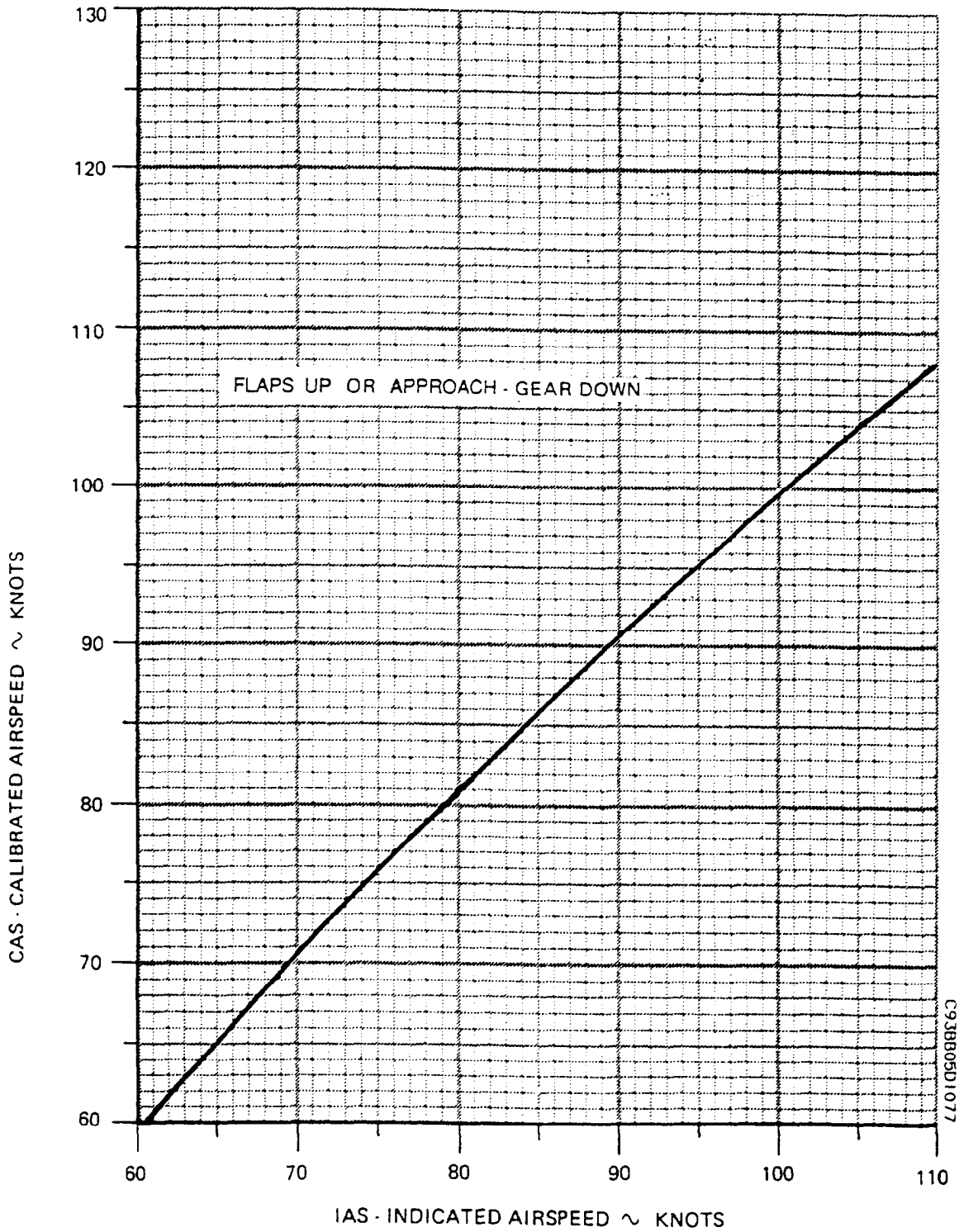

Figure 7-2. Airspeed Calibration - Normal System, Take-Off Ground Roll

AIRSPEED CALIBRATION – NORMAL SYSTEM

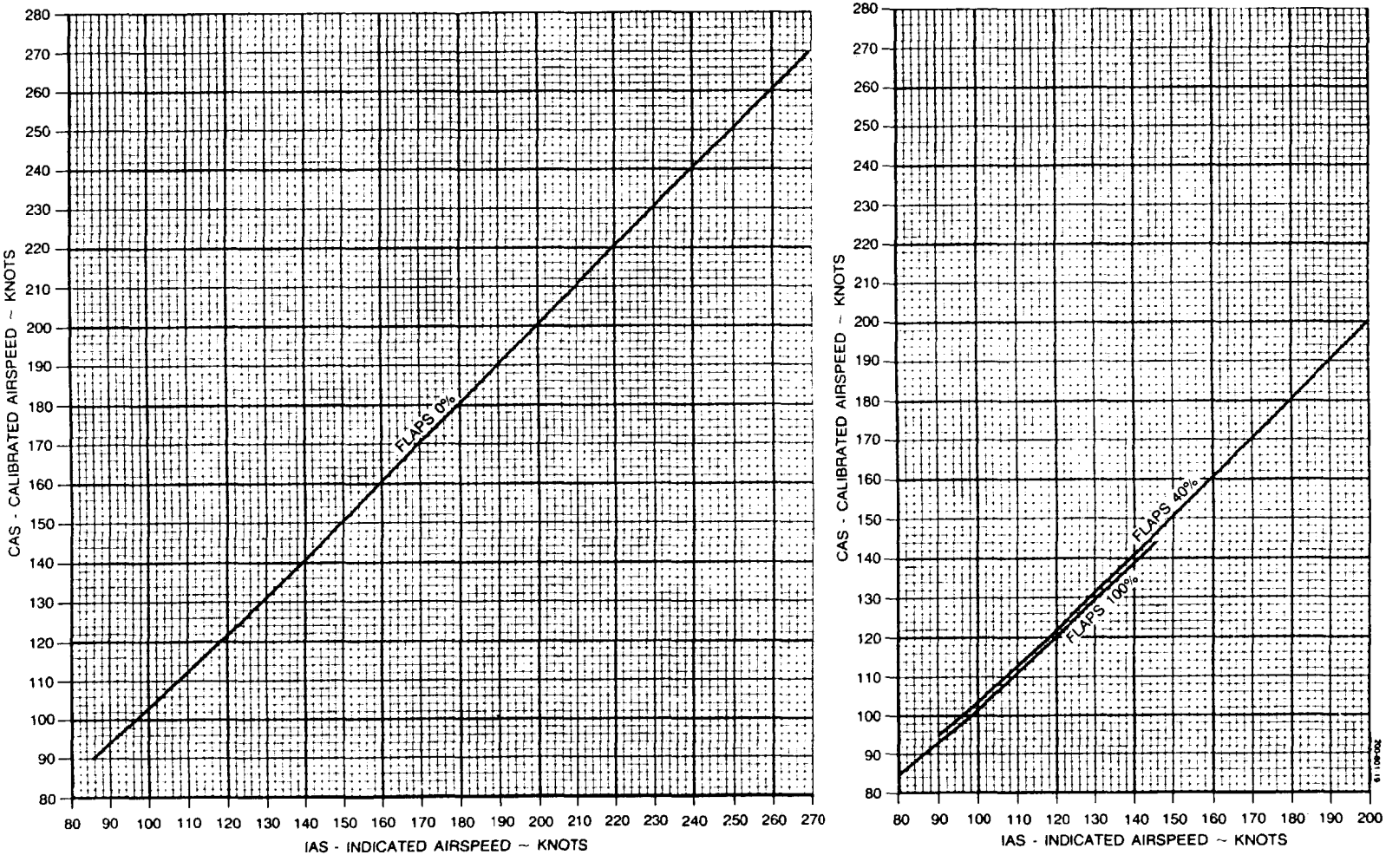

Figure 7-3. Airspeed Calibration - Normal System

ALTIMETER CORRECTION – NORMAL SYSTEM

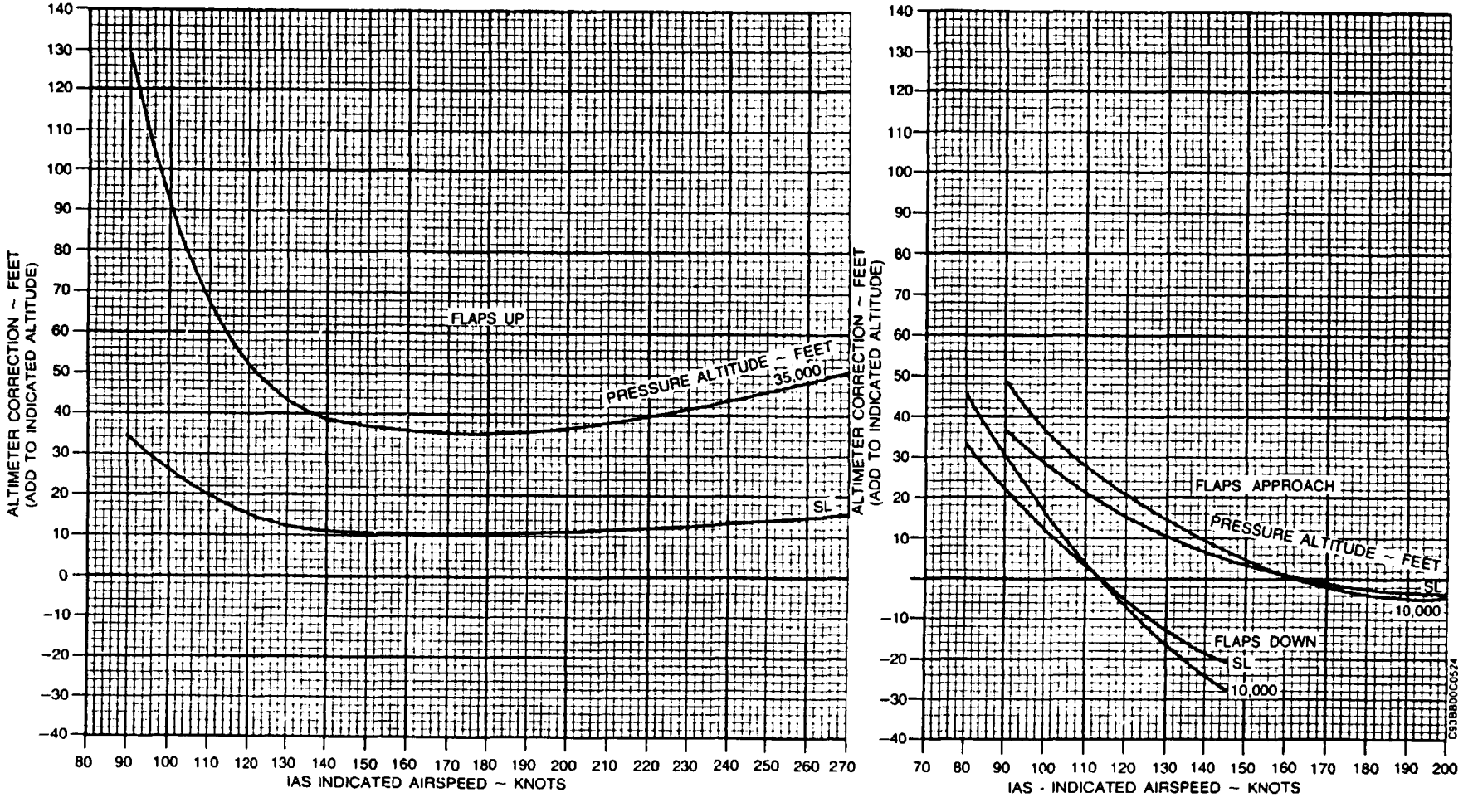

Figure 7-4. Altimeter Correction - Normal System

AIRSPEED CALIBRATION — ALTERNATE SYSTEM

APPLICABLE FOR ALL FLAP POSITIONS

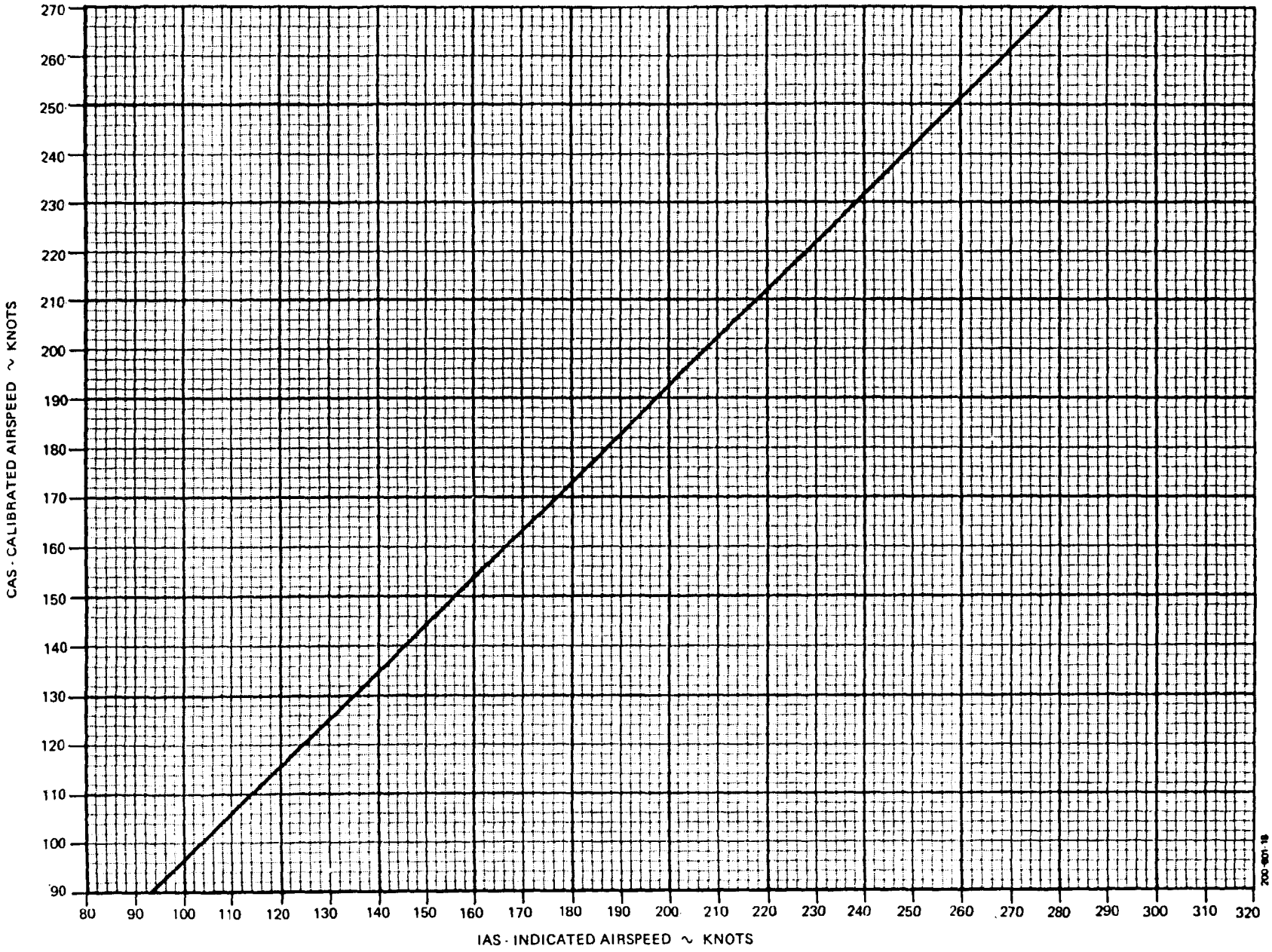

Figure 7-5. Airspeed Calibration - Alternate System

ALTIMETER CORRECTION - ALTERNATE SYSTEM

APPLICABLE FOR ALL FLAP POSITIONS

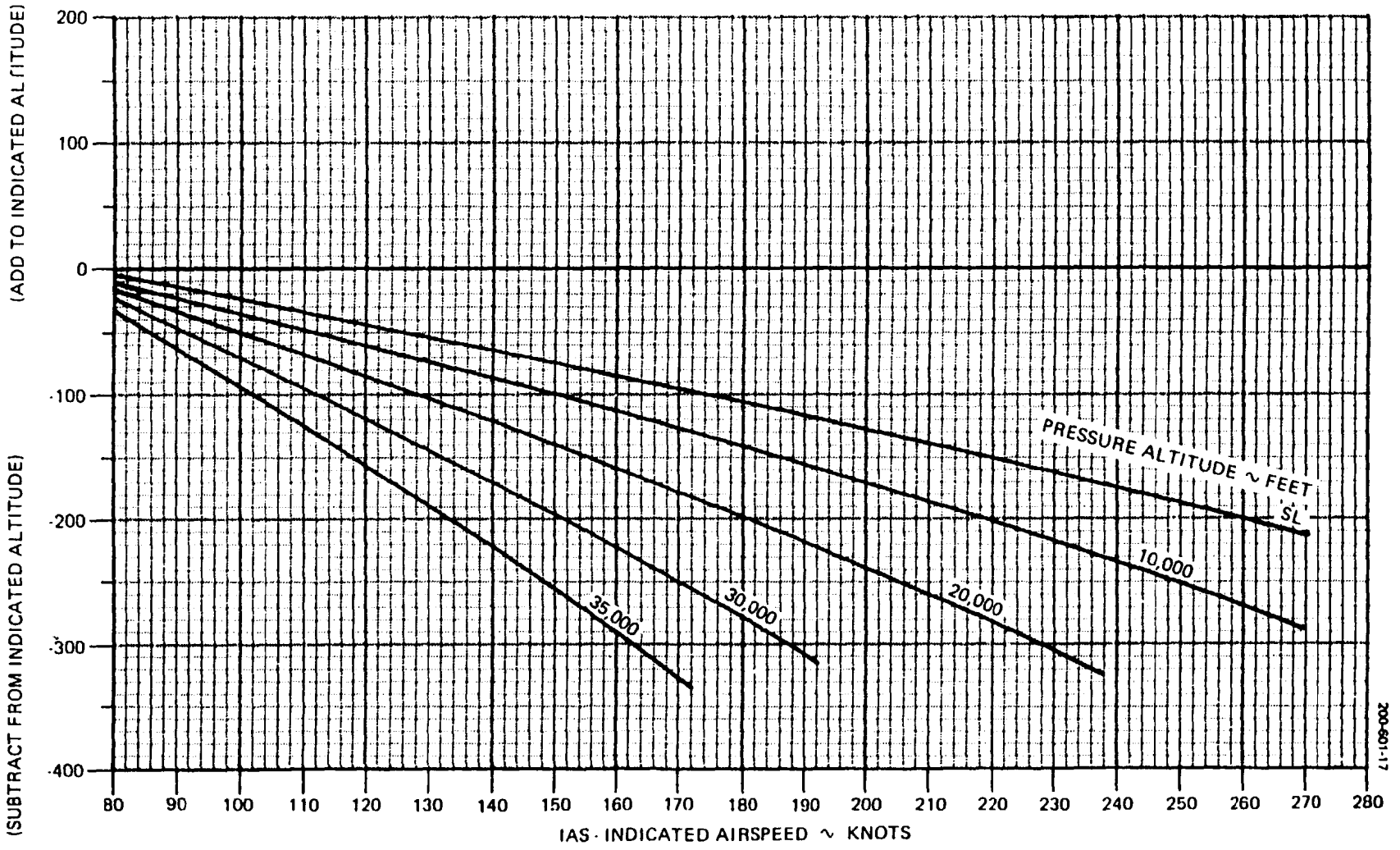

Figure 7-6. Altimeter Correction - Alternate System

INDICATED OUTSIDE AIR TEMPERATURE CORRECTION
STANDARD DAY (ISA)

NOTE: SUBTRACT AT FROM INDICATED (GAGE) OAT TO OBTAIN TRUE OAT. (AT ASSUMES A RECOVERY FACTOR OF 0.7)

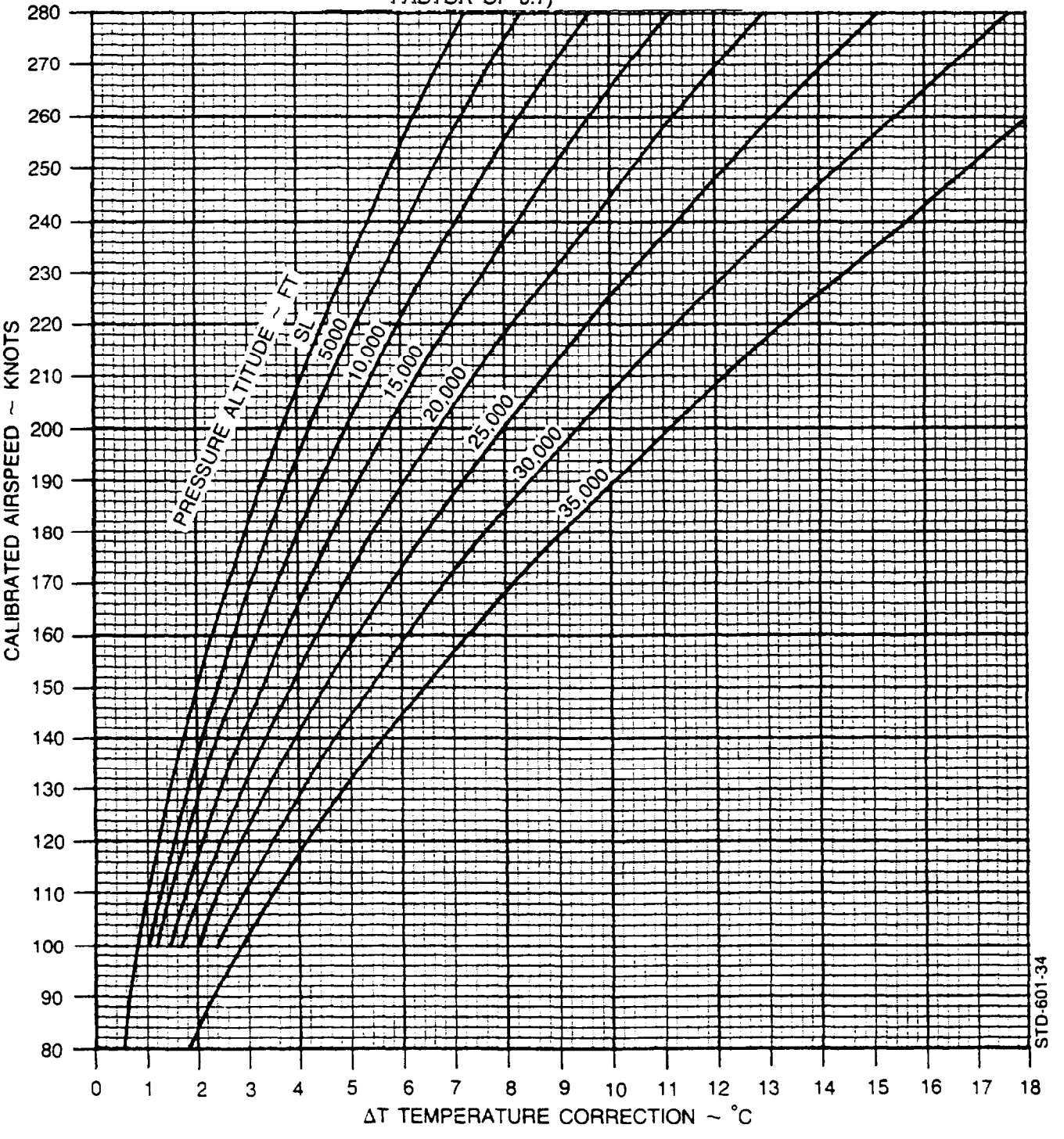

Figure 7-7. Indicated Outside Air Temperature Correction - ISA

ISA CONVERSION

PRESSURE ALTITUDE vs OUTSIDE AIR TEMPERATURE

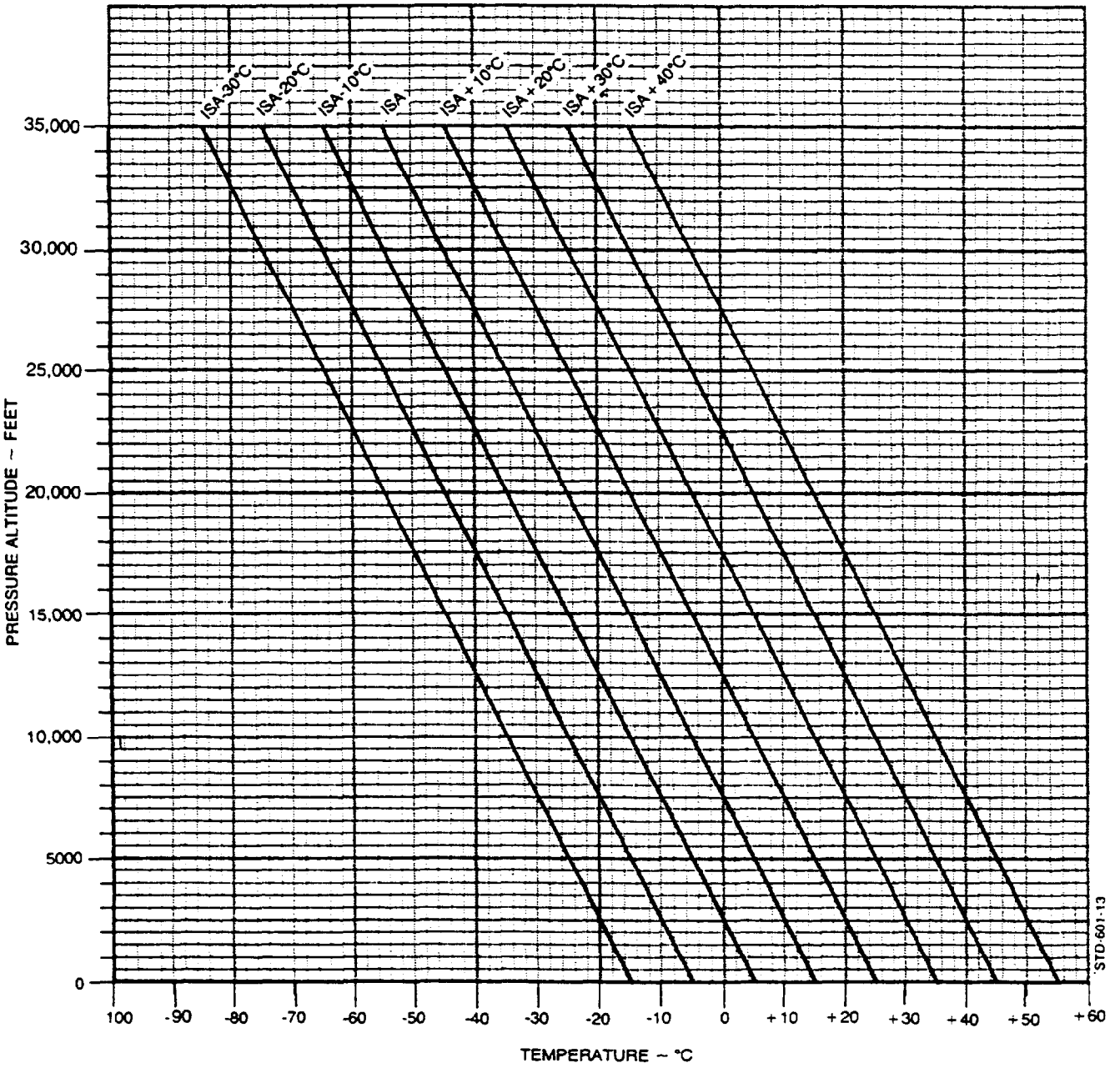

Figure 7-8. ISA Conversion

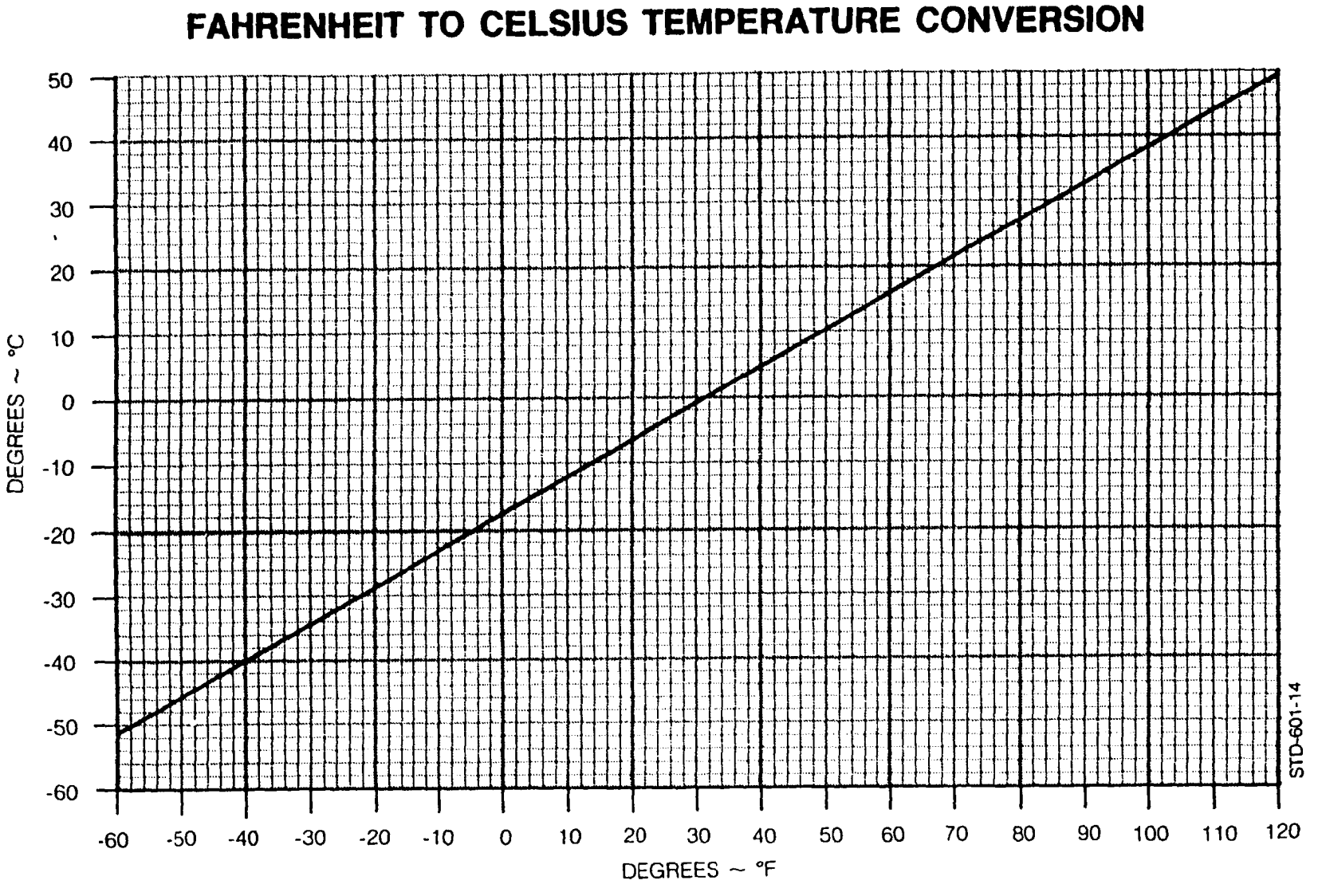

Figure 7-9. Fahrenheit to Celsius *Temperature Conversion*

STALL SPEEDS-POWER IDLE

NOTES:

1. MAXIMUM ALTITUDE LOSS DURING A NORMAL STALL RECOVERY IS APPROXIMATELY 1000 FEET.
2. MAXIMUM NOSE DOWN PITCH ATTITUDE AND ALTITUDE LOSS DURING RECOVERY FROM ONE ENGINE INOPERATIVE STALLS PER FAR 23.205 ARE APPROXIMATELY 20° AND 850 FEET RESPECTIVELY.
3. A NORMAL STALL RECOVERY TECHNIQUE MAY BE USED. THE BEST PROCEDURE IS A BRISK FORWARD WHEEL MOVEMENT TO A NOSE DOWN ATTITUDE. LEVEL THE AIRPLANE AFTER AIRSPEED HAS INCREASED APPROXIMATELY 25 KNOTS ABOVE STALL.

EXAMPLE:

WEIGHT	11,700 LBS
FLAPS	APPROACH
ANGLE OF BANK	30°
STALL SPEED	95 KTS CAS 90 KTS IAS

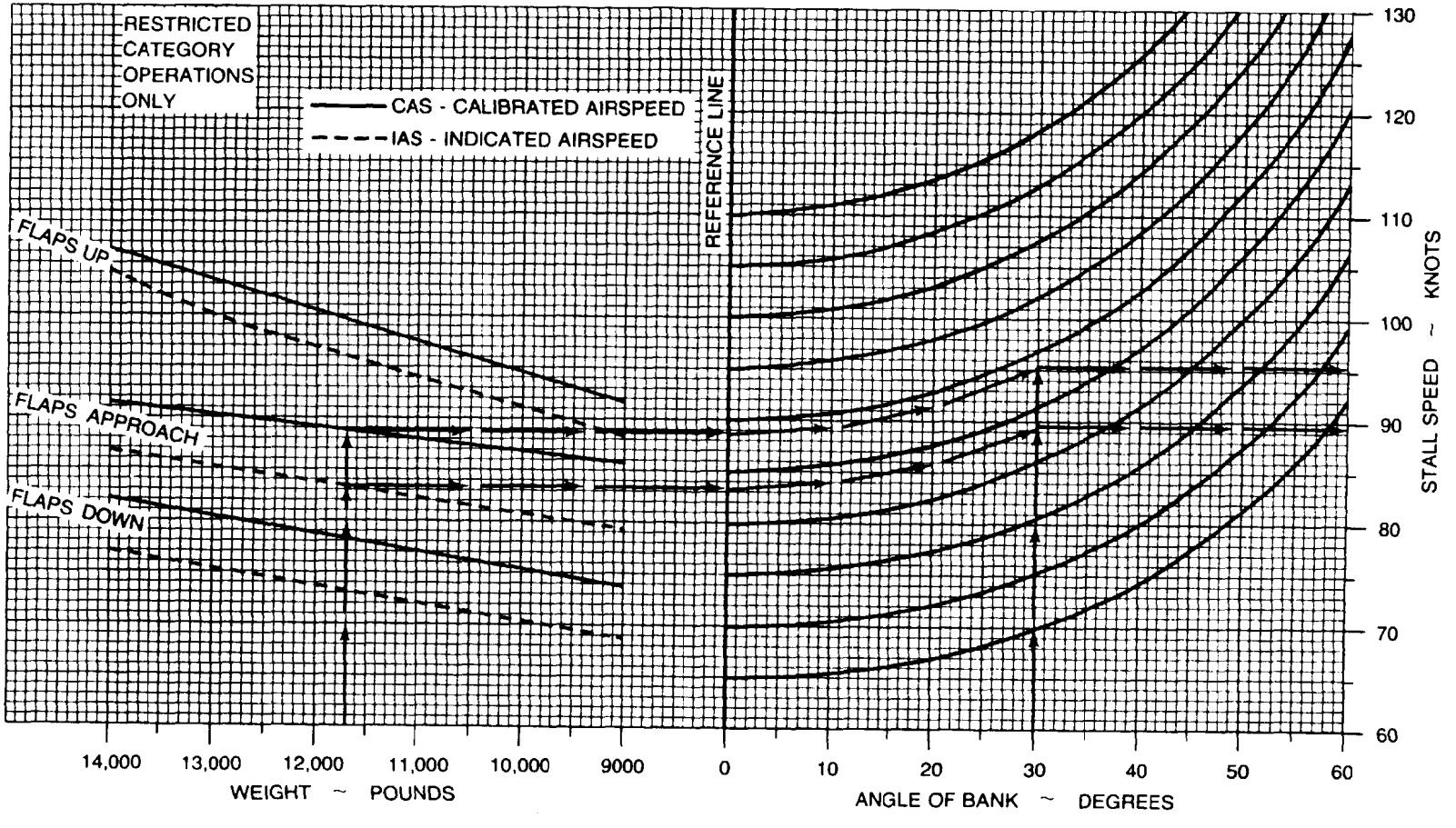

Figure 7-10. Stall Speeds - Power Idle

CABIN ALTITUDE FOR VARIOUS AIRPLANE ALTITUDES

EXAMPLE:

AIRPLANE ALTITUDE	25,000 FT
CABIN DIFFERENTIAL PRESSURE	4.0 PSI
CABIN ALTITUDE	11,800 FT

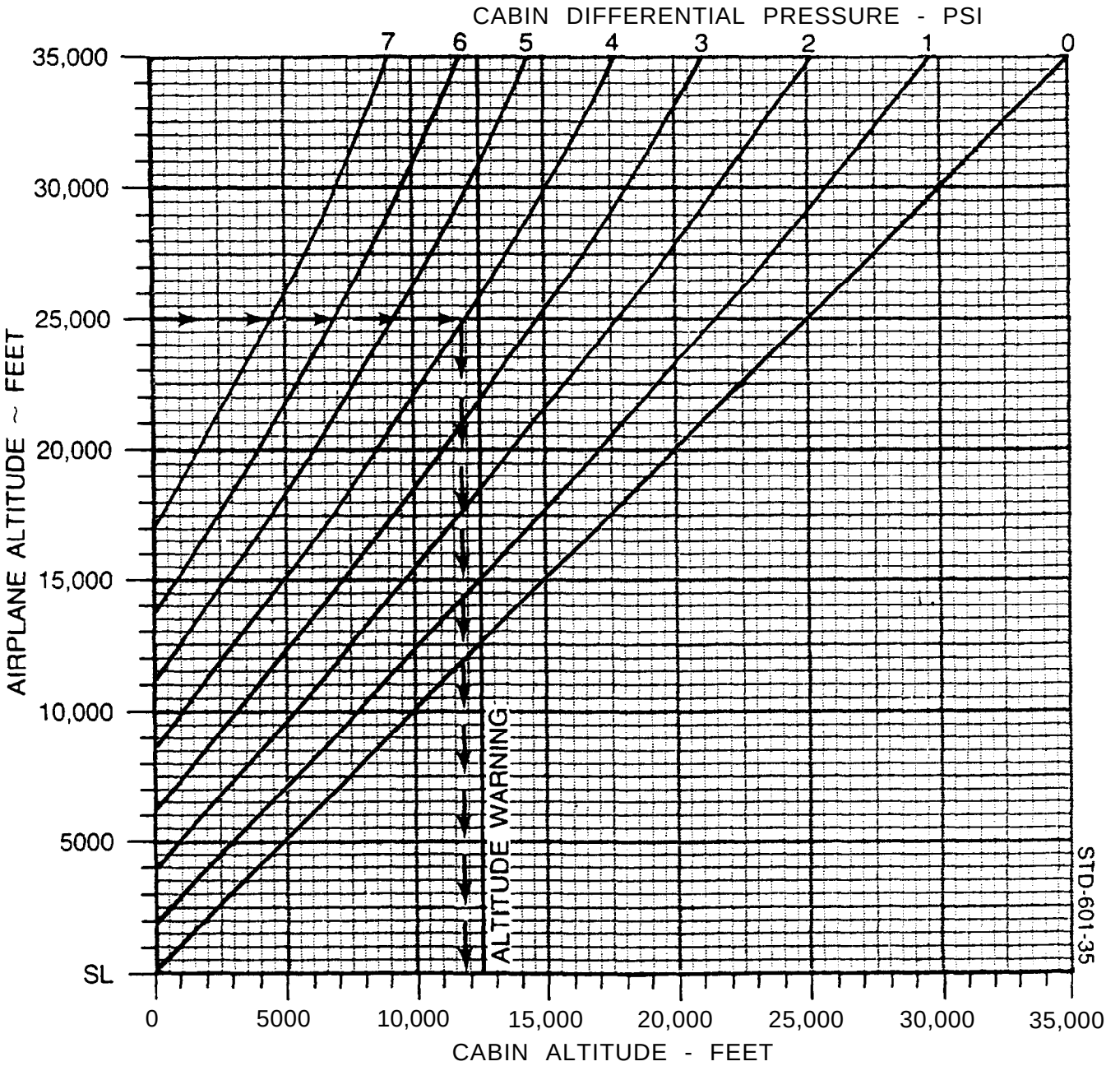

Figure 7-11. Cabin Altitude for Various Airplane Altitudes

TAKE-OFF WEIGHT - FLAPS UP

TO ACHIEVE POSITIVE ONE-ENGINE INOPERATIVE CLIMB AT LIFT-OFF

ASSOCIATED CONDITIONS:

POWER ..... TAKE-OFF
FLAPS ..... UP
LANDING GEAR ..... DOWN

EXAMPLE:

PRESSURE ALTITUDE ..... 5433 FT
OAT ..... 28°C

TAKE-OFF WEIGHT NORMAL CATEGORY ..... 12,500 LBS
TAKE-OFF WEIGHT RESTRICTED CATEGORY ..... 13,550 LBS

NOTE: FOR OPERATION WITH ICE VANES EXTENDED, NO OFF-LOADING IS REQUIRED.

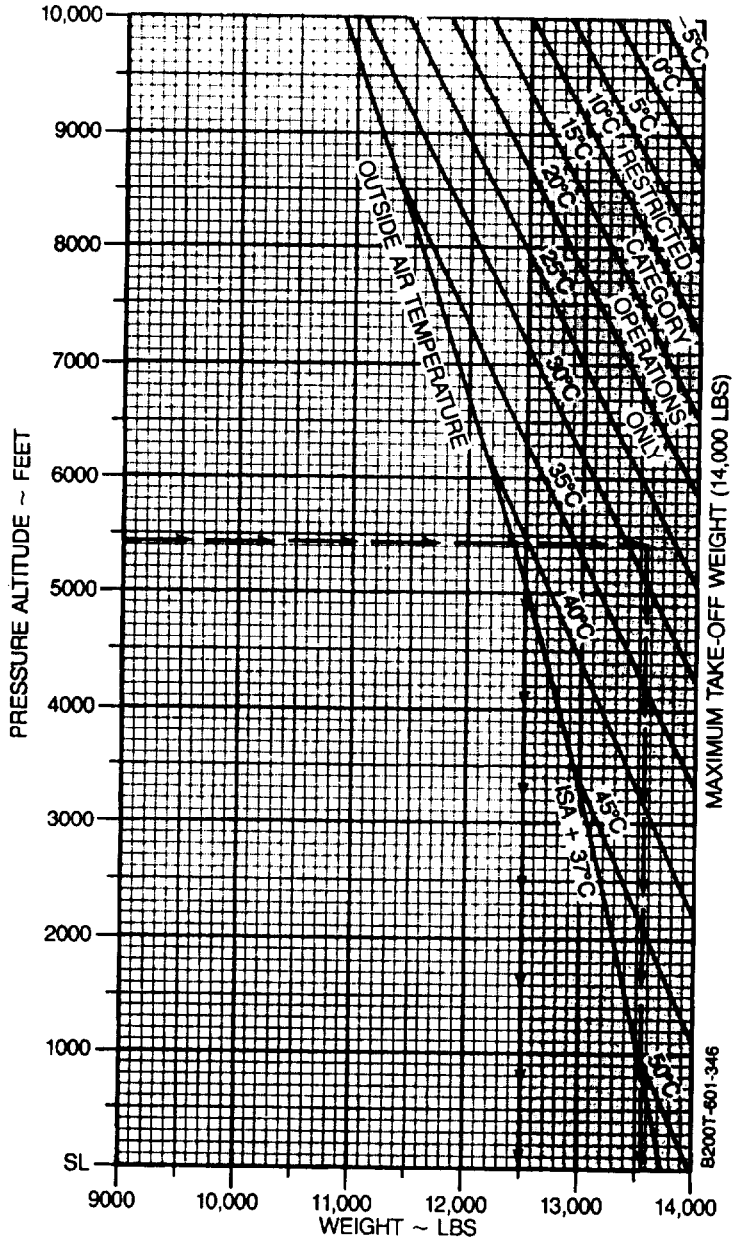

Figure 7-12. Take-Off Weight to Achieve Positive One-Engine-Inoperative Climb at Lift-Off, Flaps **UP**

TAKE-OFF WEIGHT - FLAPS APPROACH

TO ACHIEVE POSITIVE ONE-ENGINE INOPERATIVE CLIMB AT LIFT-OFF

ASSOCIATED CONDITIONS:

POWER	TAKE-OFF
FLAPS	APPROACH
LANDING GEAR	DOWN

EXAMPLE:

PRESSURE ALTITUDE	5433 FT
OAT	28°C
TAKE-OFF WEIGHT	12,340 LBS

NOTE: FOR OPERATION WITH ICE VANES EXTENDED, ADD 10°C TO THE ACTUAL OAT BEFORE ENTERING GRAPH

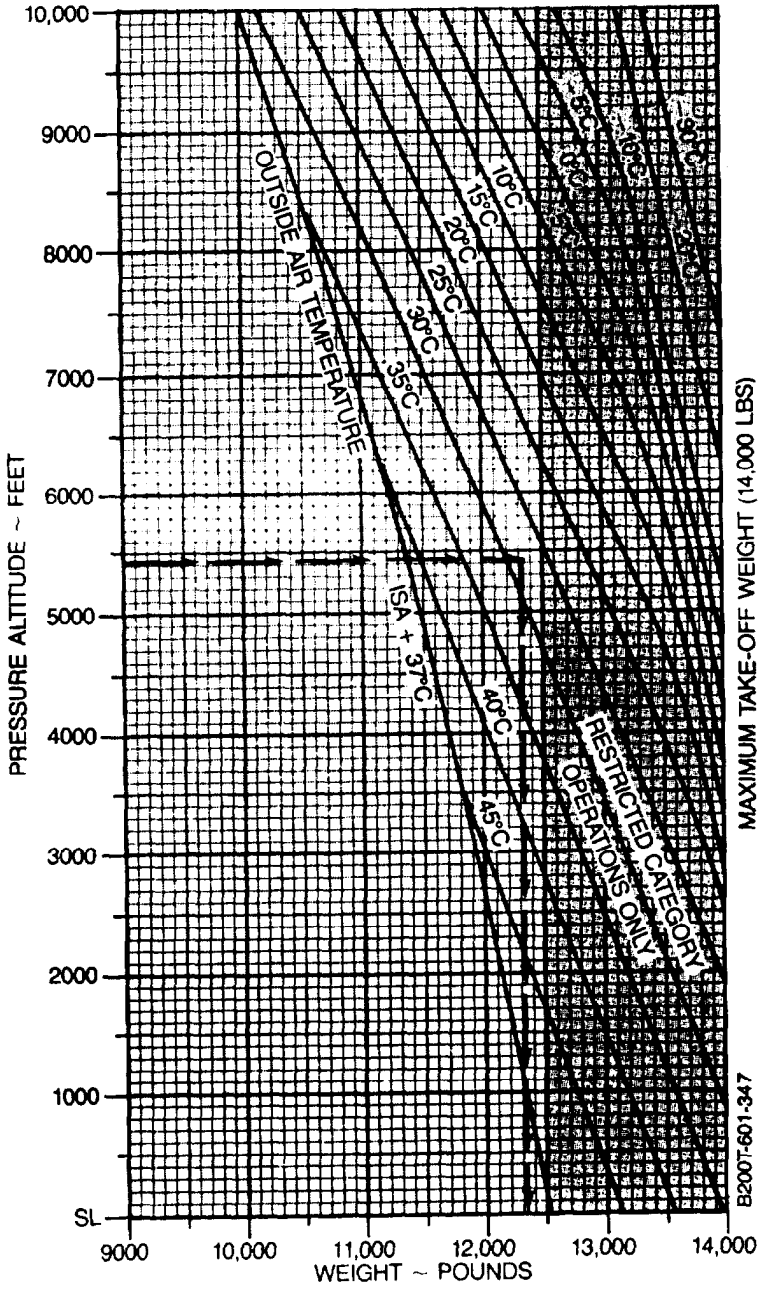

Figure 7-13. Take-Off Weight to Achieve Positive One-Engine-Inoperative Climb at Lift-Off, Flaps APPROACH

MINIMUM TAKE-OFF POWER AT 2000 RPM
WITH ICE VANES RETRACTED
(65 KNOTS)

NOTES: 1. TOROUE INCREASES APPROXIMATELY 1% FROM ZERO TO 65 KNOTS.
2. THE POWER (TOROUE) INDICATED IS THE MINIMUM VALUE FOR WHICH TAKE-OFF PERFORMANCE IN THIS SECTION CAN BE OBTAINED. EXCESS POWER WHICH CAN BE DEVELOPED WITHOUT EXCEEDING ENGINE LIMITATIONS MAY BE UTILIZED.

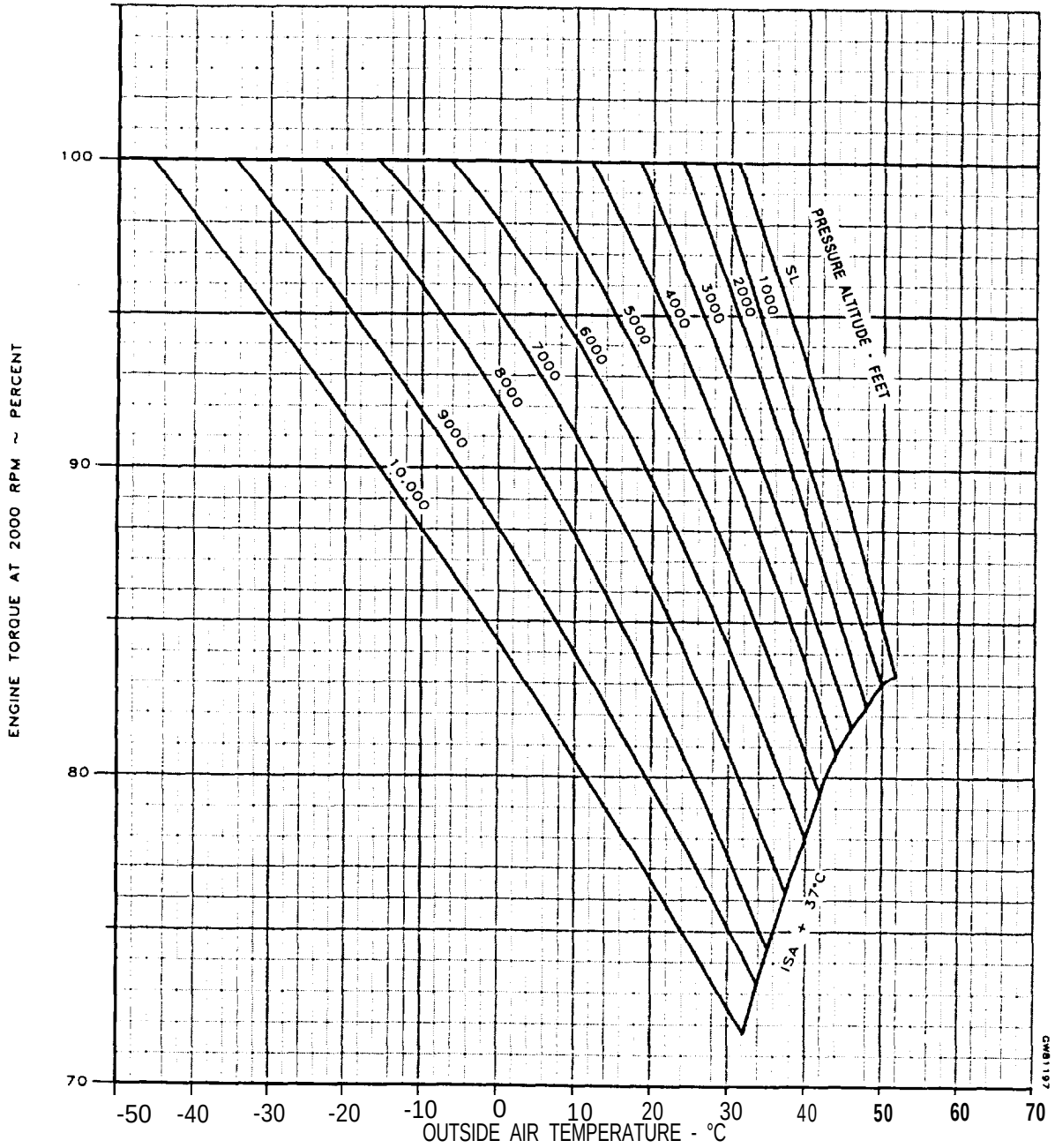

Figure 7-14. Minimum Take-Off Power at 2000 RPM With Ice Vanes Retracted (65 Knots)

MINIMUM TAKE-OFF POWER
WITH ICE VANES EXTENDED
(65 KNOTS)

NOTES: 1. TOROUE INCREASES APPROXIMATELY 1% FROM ZERO TO 65 KNOTS.
2. THE POWER (TORQUE) INDICATED IS THE MINIMUM VALUE AT 65 KNOTS FOR WHICH TAKE-OFF PERFORMANCE IN THIS SECTION CAN BE OBTAINED. TOROUE WILL CONTINUE TO INCREASE ABOVE 65 KNOTS.
3. TAKE-OFF WITH VANES EXTENDED IS PROHIBITED IN THE SHADED AREA.

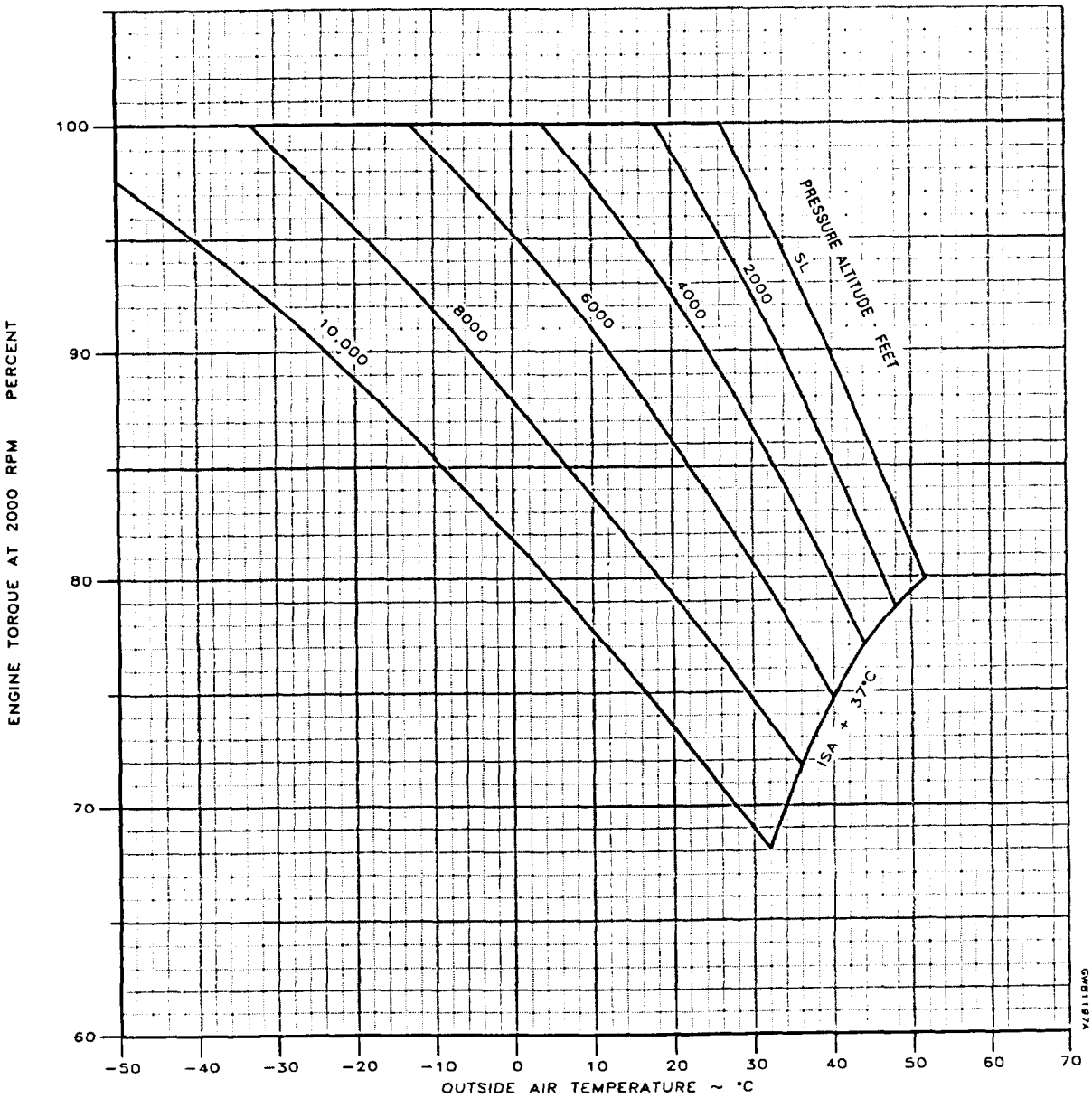

Figure 7-15. Minimum Take-Off Power With Ice Vanes Extended (65 Knots)

TAKE-OFF FLIGHT PATH

REFERENCE ZERO: THE POINT AT THE END OF THE TAKE-OFF RUN AT WHICH THE AIRPLANE IS 35 FEET ABOVE THE RUNWAY SURFACE.

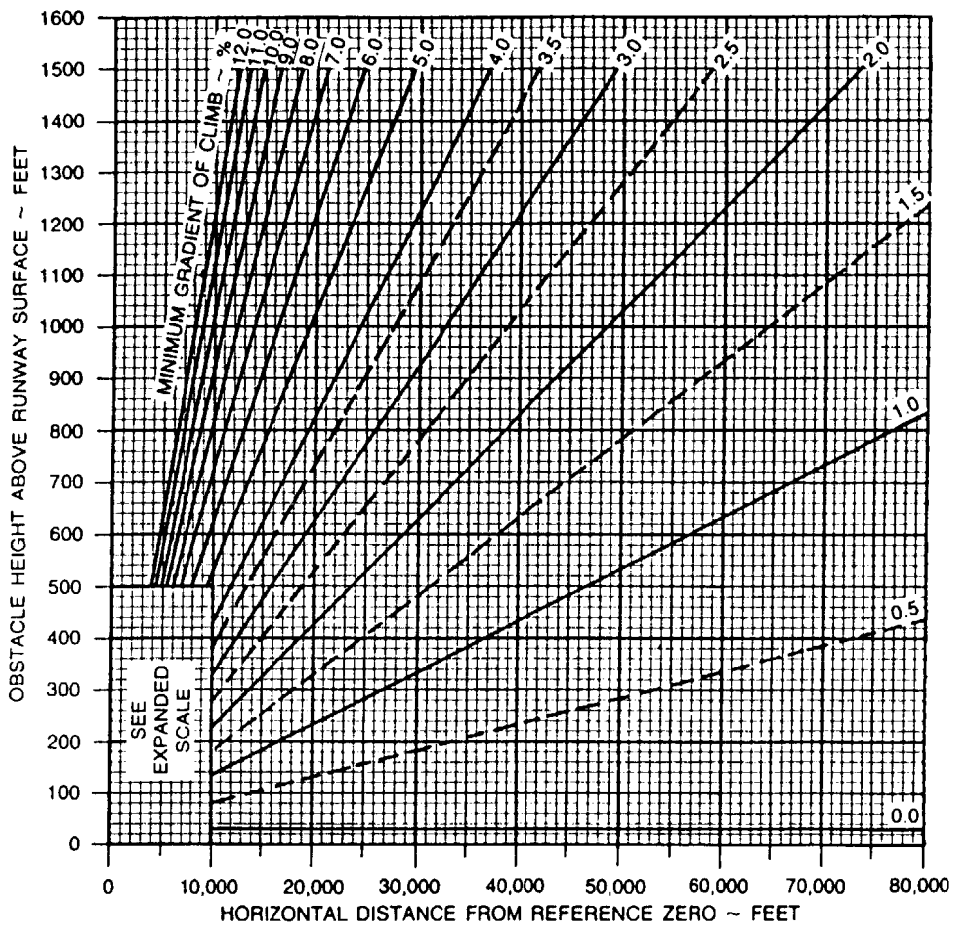

EXAMPLE:

OBSTACLE HEIGHT . . . . . 175 FEET

HORIZONTAL DISTANCE FROM REFERENCE ZERO ~ FEET	MINIMUM GRADIENT OF CLIMB ~ %
2700	5.2

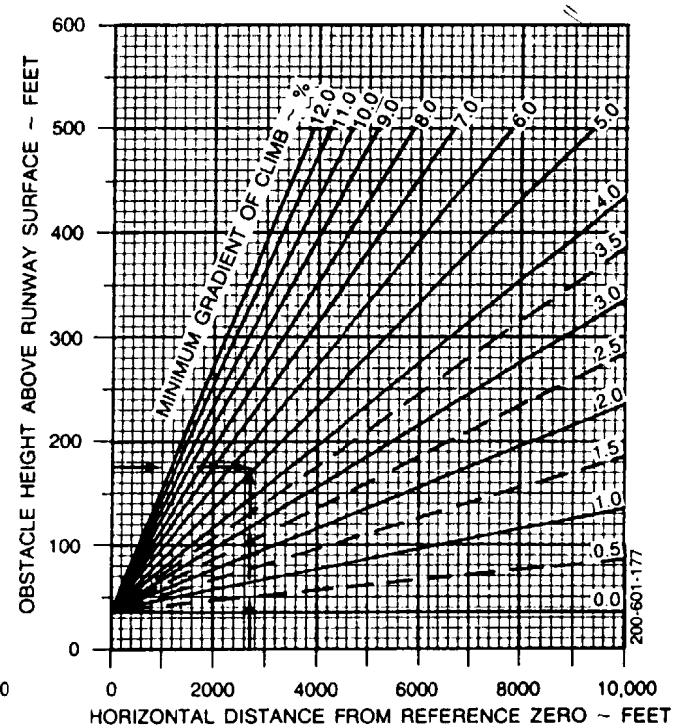

Figure 7-16. Take-Off Flight Path

WIND COMPONENTS

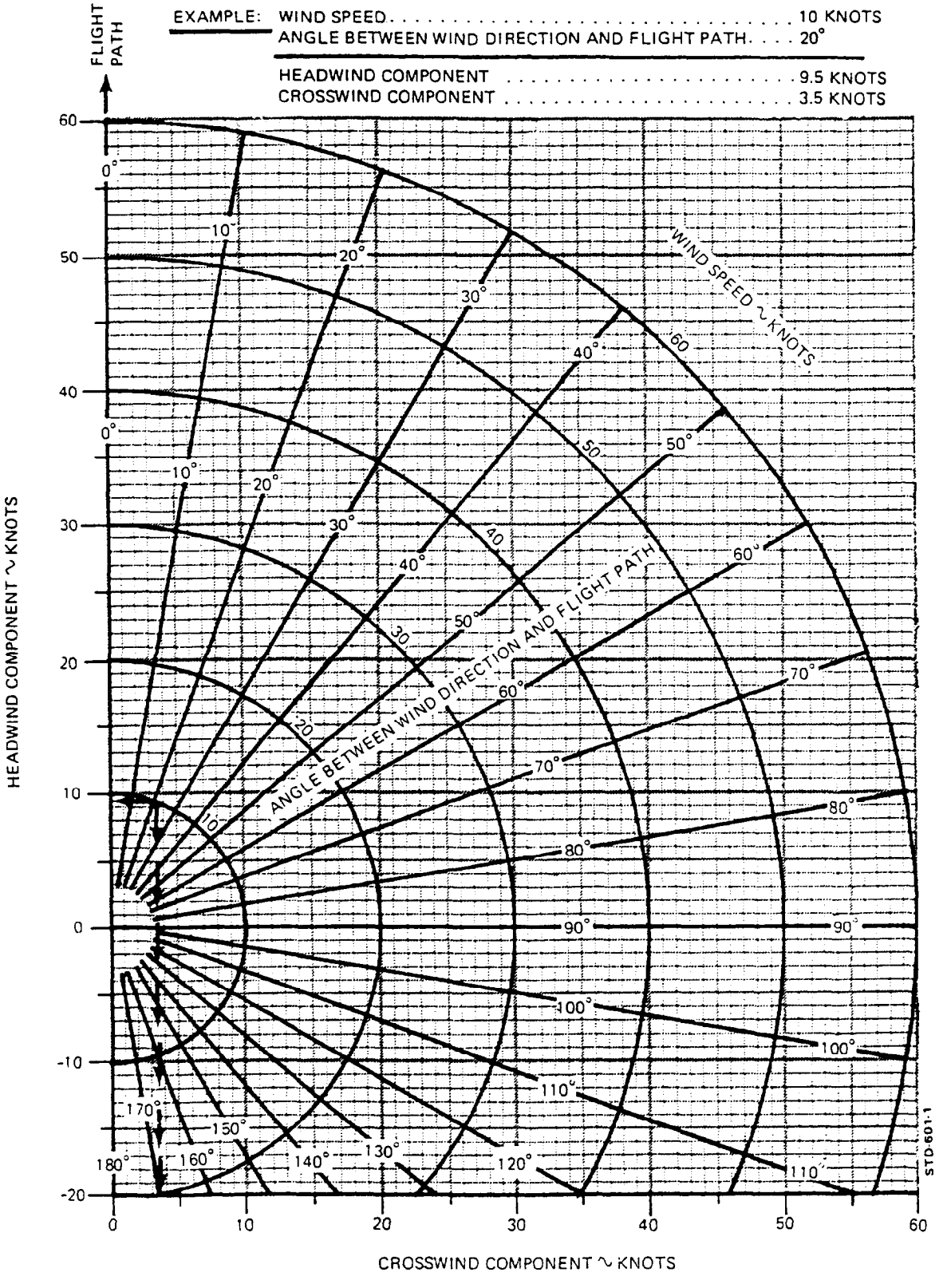

Figure 7-17. Wind Components

TAKE-OFF DISTANCE - FLAPS UP

ASSOCIATED CONDITIONS:

POWER ..... TAKE-OFF POWER SET BEFORE BRAKE RELEASE
FLAPS ..... UP
LANDING GEAR ..... RETRACT AFTER LIFT-OFF
RUNWAY ..... PAVED, LEVEL, DRY SURFACE

WEIGHT ~ POUNDS	TAKE-OFF SPEEDS ~ KNOTS	
	ROTATION	50 FT
14,000	117	126
13,000	113	123
12,500	111	121
12,000	109	120
11,000	105	115
10,000	101	111
9000	98	108

EXAMPLE:

OAT ..... 28°C
PRESSURE ALTITUDE ..... 5433 FT
TAKE-OFF WEIGHT ..... 12,500 LBS
HEADWIND COMPONENT ..... 9.5 KTS

GROUND ROLL ..... 3800 FT
TOTAL DISTANCE OVER 50 FT OBSTACLE ..... 5100 FT
TAKE-OFF SPEED AT ROTATION ..... 111 KTS
AT 50 FT ..... 121 KTS

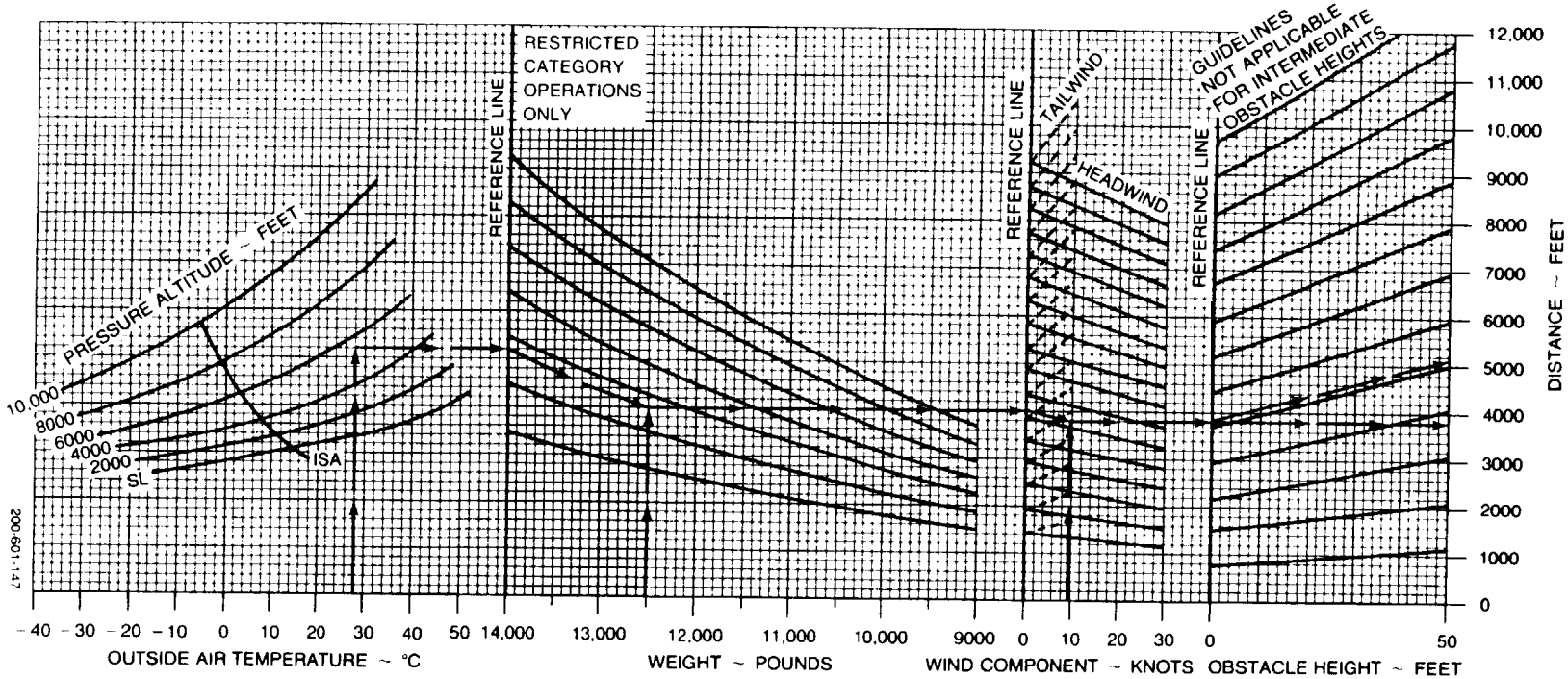

Figure 7-18. Take-Off Distance, Flaps UP

ACCELERATE-STOP - FLAPS UP

ASSOCIATED CONDITIONS:

POWER ..... 1. TAKE-OFF POWER SET BEFORE BRAKE RELEASE
2. BOTH ENGINES IDLE AT V_1 SPEED AND REVERSE OPERATING ENGINE

FLAPS ..... UP
AUTOFEATHER ..... ARMED
BRAKING ..... MAXIMUM
RUNWAY ..... PAVED, LEVEL, DRY SURFACE

WEIGHT ~ POUNDS	V_1 ~ KNOTS
14,000	117
13,000	113
12,500	111
12,000	109
11,000	105
10,000	101
9000	98

EXAMPLE:

OAT ..... 28°C
PRESSURE ALTITUDE ..... 5430 FT
WEIGHT ..... 12500 LBS
HEADWIND COMPONENT ..... 9.5 KTS

FIELD LENGTH ..... 5800 FT
V_1 ..... 111 KTS

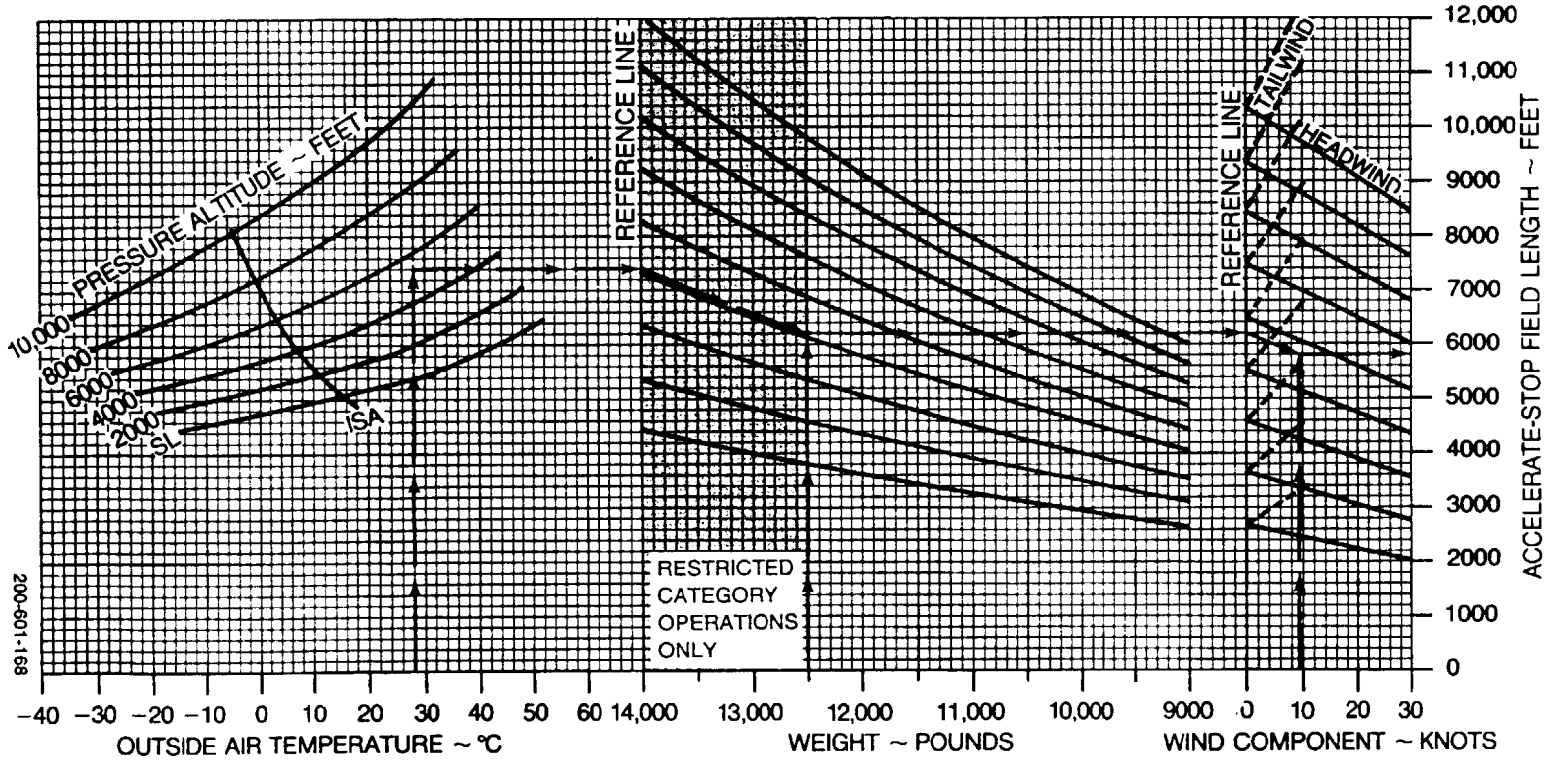

Figure 7-19. Accelerate - Stop, FLaps **UP**

ACCELERATE - GO - FLAPS UP

ASSOCIATED CONDITIONS:

POWER ..... TAKE-OFF POWER SET BEFORE BRAKE RELEASE
FLAPS ..... UP
AUTOFEATHER ..... ARMED
LANDING GEAR ..... RETRACT AFTER LIFT-OFF
RUNWAY ..... PAVED, LEVEL, DRY SURFACE

NOTES:

1. AIR DISTANCE IS 50% OF TAKE-OFF DISTANCE OVER 35-FT OBSTACLE.
2. DISTANCES ASSUME AN ENGINE FAILURE AT ROTATION SPEED AND PROPELLER IMMEDIATELY FEATHERED.
3. USABLE CLEARWAY CANNOT EXCEED 25% OF THE RUNWAY LENGTH.
4. WEIGHTS IN ▨ AREA MAY NOT MEET FAR 25 REQUIREMENTS. REFER TO TAKE-OFF WEIGHT GRAPH TO MEET FAR 25 REQUIREMENTS.

WEIGHT ~ POUNDS	SPEED ~ KNOTS	
	V_R	V_2
14,000	117	128
13,000	113	125
12,500	111	121
12,000	109	120
11,000	105	115
10,000	101	111
9000	98	108

EXAMPLE:

OAT ..... 28°C
PRESSURE ALTITUDE ..... 5430 FT
HEADWIND COMPONENT ..... 9.5 KTS

TAKE-OFF WEIGHT ~ POUNDS	TAKE-OFF FIELD LENGTH ~ FEET
12,500	9600
11,280	6786
10,370	5800

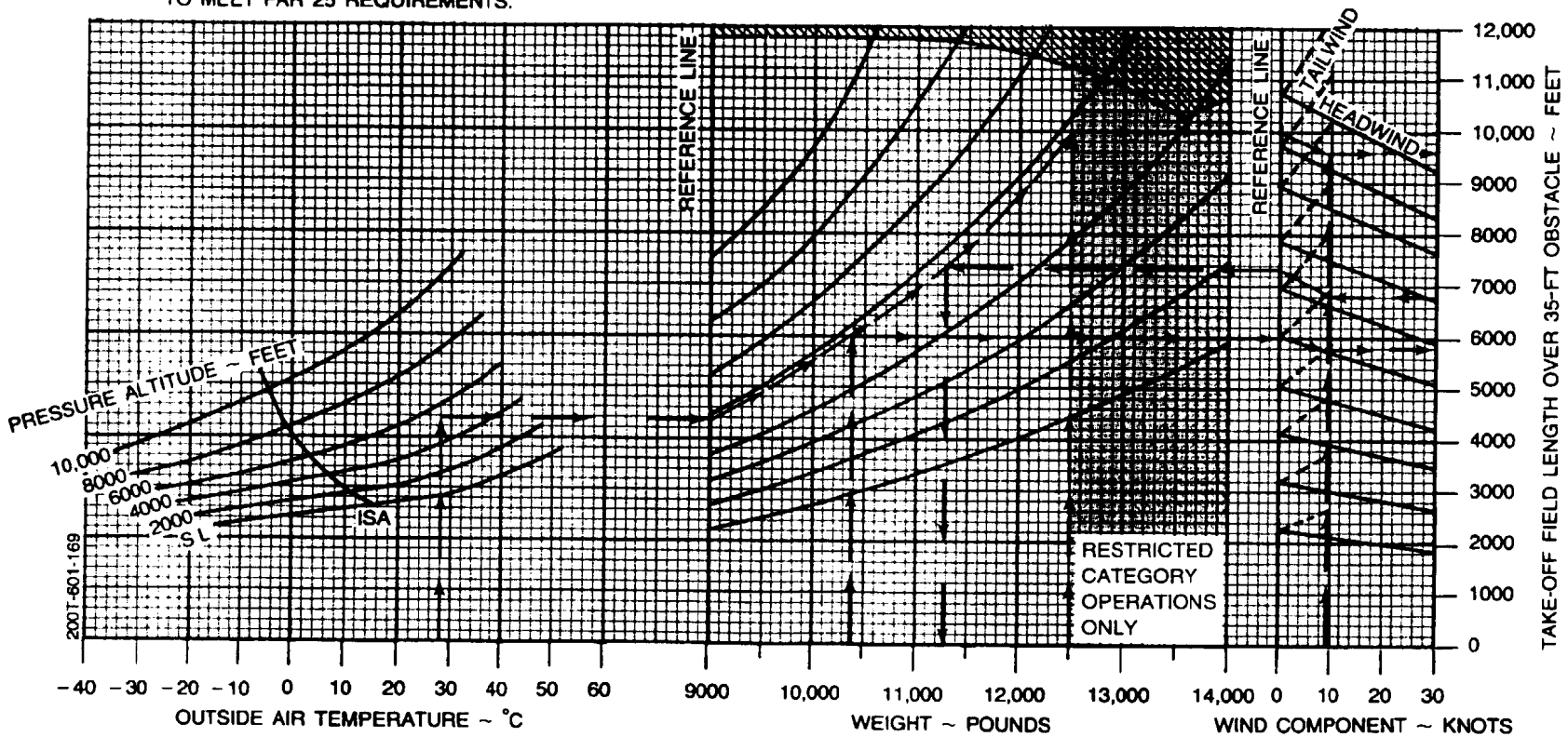

Figure 7-20. Accelerate - Go, Flaps **UP**

NET GRADIENT OF CLIMB - FLAPS UP

ASSOCIATED CONDITIONS:

POWER ..... TAKEOFF
FLAPS ..... UP
GEAR ..... UP
INOPERATIVE PROPELLER ..... FEATHERED

WEIGHT ~ POUNDS	CLIMB SPEED ~ KNOTS
14,000	126
13,000	123
12,500	121
12,000	120
11,000	115
10,000	111
9000	108

EXAMPLE:

OAT ..... 28°C
PRESSURE ALTITUDE ..... 5430 FT

TAKE-OFF WEIGHT ~ POUNDS	NET GRADIENT ~ %
11,280	3.0
9380	5.2
10,370	3.9

CLIMB SPEED @ 10,370 LBS ..... 112 KTS

NOTE:

NET GRADIENT OF CLIMB
IS EQUAL TO ACTUAL GRADIENT OF CLIMB IN PERCENT MINUS 0.8 PERCENT

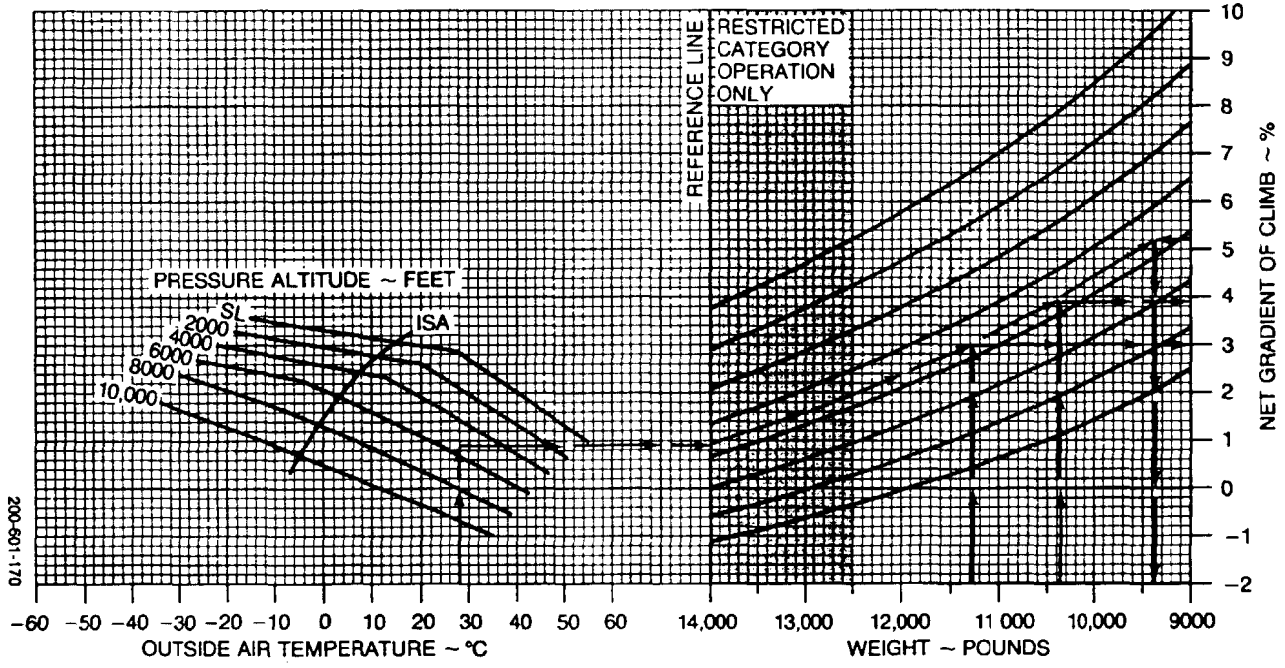

Figure 7-21. Net Gradient of Climb, Flaps **UP**

TAKE-OFF DISTANCE - FLAPS APPROACH

ASSOCIATED CONDITIONS:

POWER	TAKE-OFF POWER SET BEFORE BRAKE RELEASE
FLAPS	APPROACH
LANDING GEAR	RETRACT AFTER LIFT-OFF
RUNWAY	PAVED, LEVEL, DRY SURFACE

WEIGHT ~ POUNDS	TAKE-OFF SPEED ~ KNOTS	
	ROTATION	50 FT
14,000	98	108
13,000	96	106
12,500	96	105
12,000	95	104
11,000	94	103
10,000	94	101
9000	94	99

EXAMPLE:

OAT	28°C
PRESSURE ALTITUDE	5433 FT
TAKE-OFF WEIGHT	12,500 LBS
HEADWIND COMPONENT	9.5 KTS
GROUND ROLL	2600 FT
TOTAL DISTANCE OVER 50 FT OBSTACLE	3750 FT
TAKE-OFF SPEED AT ROTATION	96 KTS
AT 50 FT	105 KTS

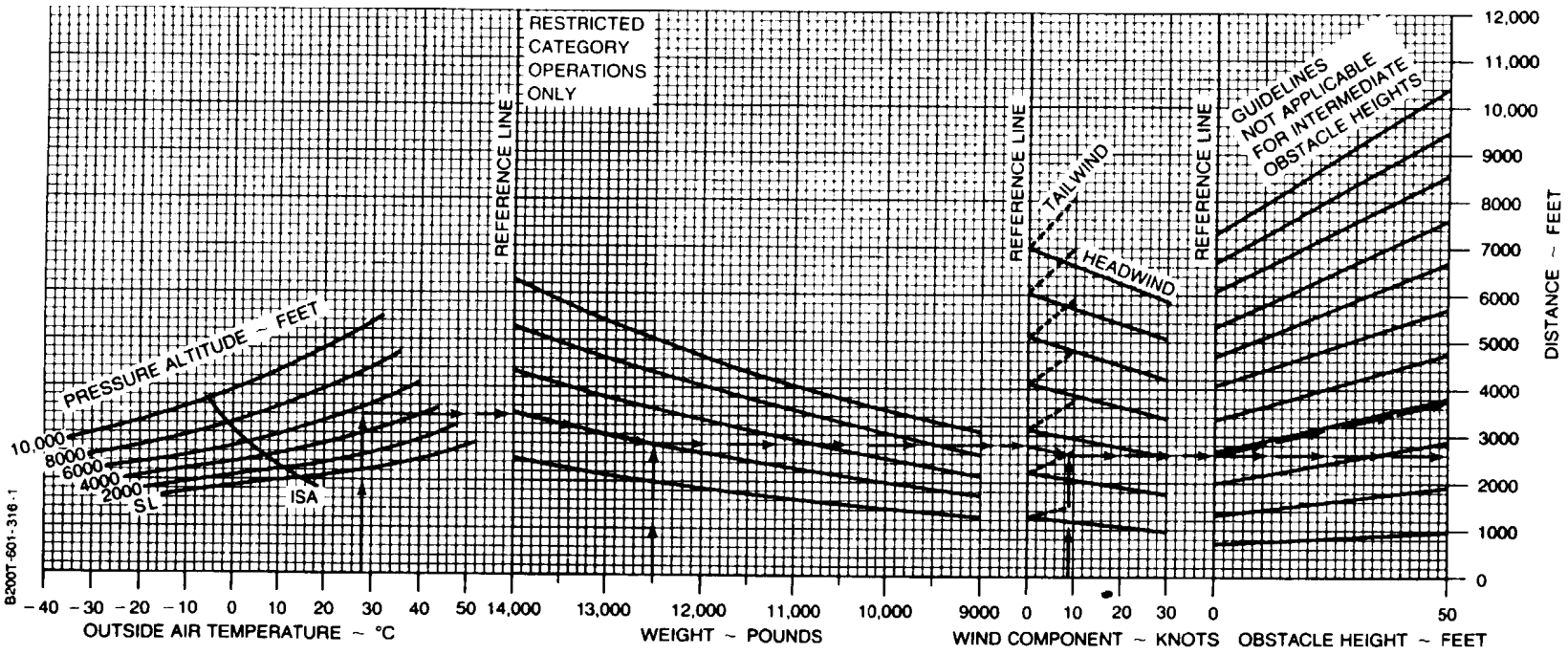

Figure 7-22. Take-Off Distance, Flaps **APPROACH**

ACCELERATE-STOP - FLAPS APPROACH

ASSOCIATED CONDITIONS:

POWER ..... 1. TAKE-OFF POWER SET BEFORE BRAKE RELEASE
2. BOTH ENGINES IDLE AT V_1 SPEED AND REVERSE OPERATING ENGINE

FLAPS ..... APPROACH
AUTOFEATHER . ARMED
BRAKING ..... MAXIMUM
RUNWAY ..... PAVED, LEVEL, DRY SURFACE

WEIGHT ~ POUNDS	V_1 ~ KNOTS
14,000	98
13,000	98
12,500	96
12,000	95
11,000	94
10,000	94
9000	94

EXAMPLE:

OAT ..... 28°C
PRESSURE ALTITUDE ..... 5430 FT
WEIGHT ..... 11,820 LBS
HEADWIND COMPONENT ..... 9.5 KTS

FIELD LENGTH ..... 4300 FT
V_1 ..... 95 KTS

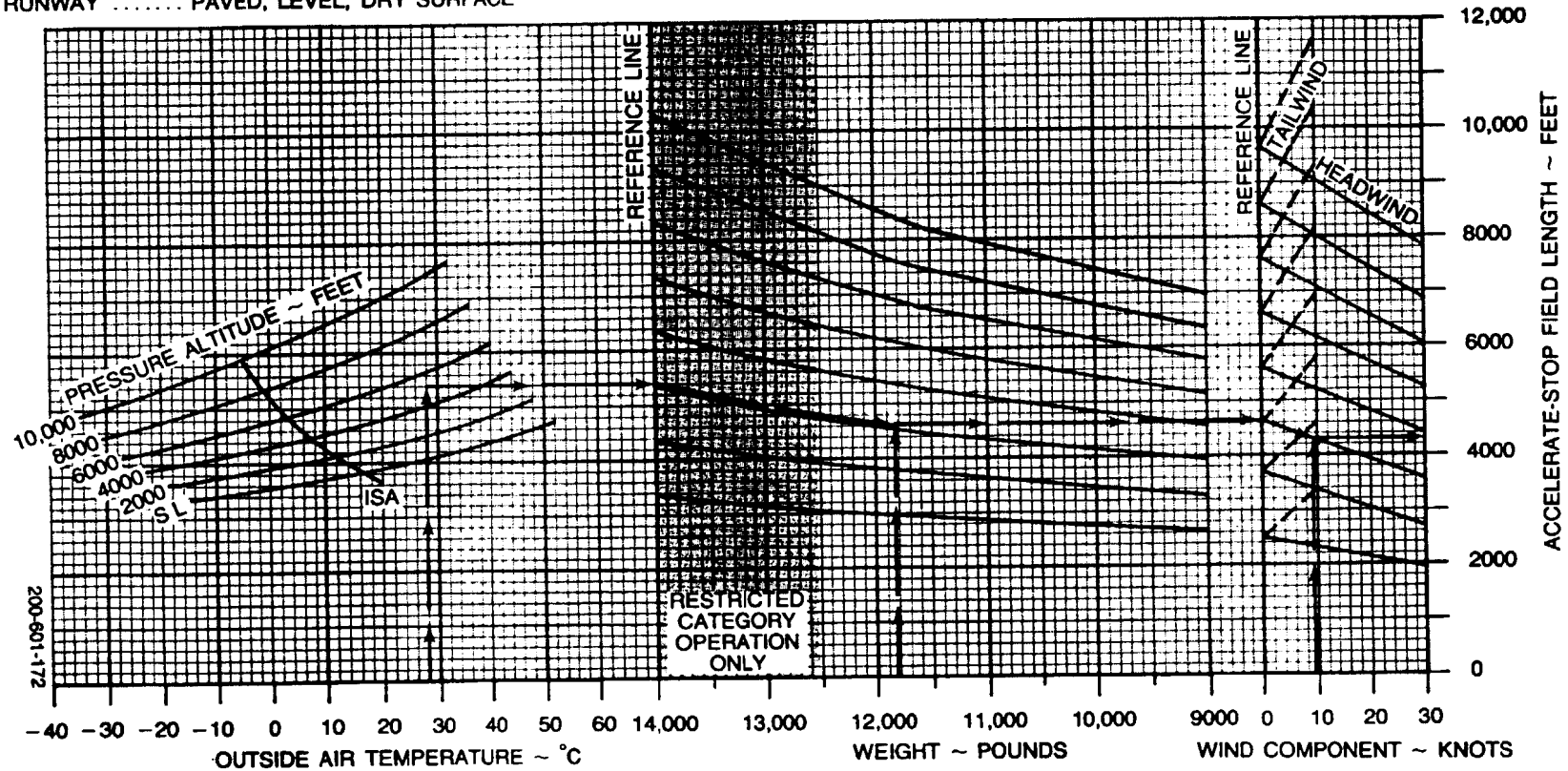

Figure 7-23. Accelerate - Stop Flaps **APPROACH**

ACCELERATE-GO - FLAPS APPROACH

ASSOCIATED CONDITIONS:

POWER ..... TAKE-OFF POWER SET BEFORE BRAKE RELEASE
FLAPS ..... APPROACH
AUTOFEATHER ..... ARMED
LANDING GEAR ..... RETRACT AFTER LIFT-OFF
RUNWAY ..... PAVED, LEVEL, DRY SURFACE

NOTES:
1. AIR DISTANCE IS 60% OF TAKE-OFF DISTANCE OVER 35-FT OBSTACLE.
2. DISTANCES ASSUME AN ENGINE FAILURE AT ROTATION SPEED AND PROPELLER IMMEDIATELY FEATHERED.
3. USABLE CLEARWAY CANNOT EXCEED 25% OF THE RUNWAY LENGTH.
4. WEIGHTS IN ▨ AREA MAY NOT MEET FAR 25 REQUIREMENTS. REFER TO TAKE-OFF WEIGHT GRAPH TO MEET FAR 25 REQUIREMENTS.

WEIGHT ~ POUNDS	SPEED ~ KNOTS	
	V_R	V_2
14,000	96	106
13,000	96	106
12,500	96	105
12,000	95	104
11,000	94	103
10,000	94	101
9000	94	99

EXAMPLE:

OAT ..... 28°C
PRESSURE ALTITUDE ..... 5430 FT.
HEADWIND COMPONENT ..... 9.5 KTS.

TAKE-OFF WEIGHT ~ POUNDS	TAKE-OFF FIELD LENGTH ~ FEET
11,820	7300
11,520	6786
10,175	4820

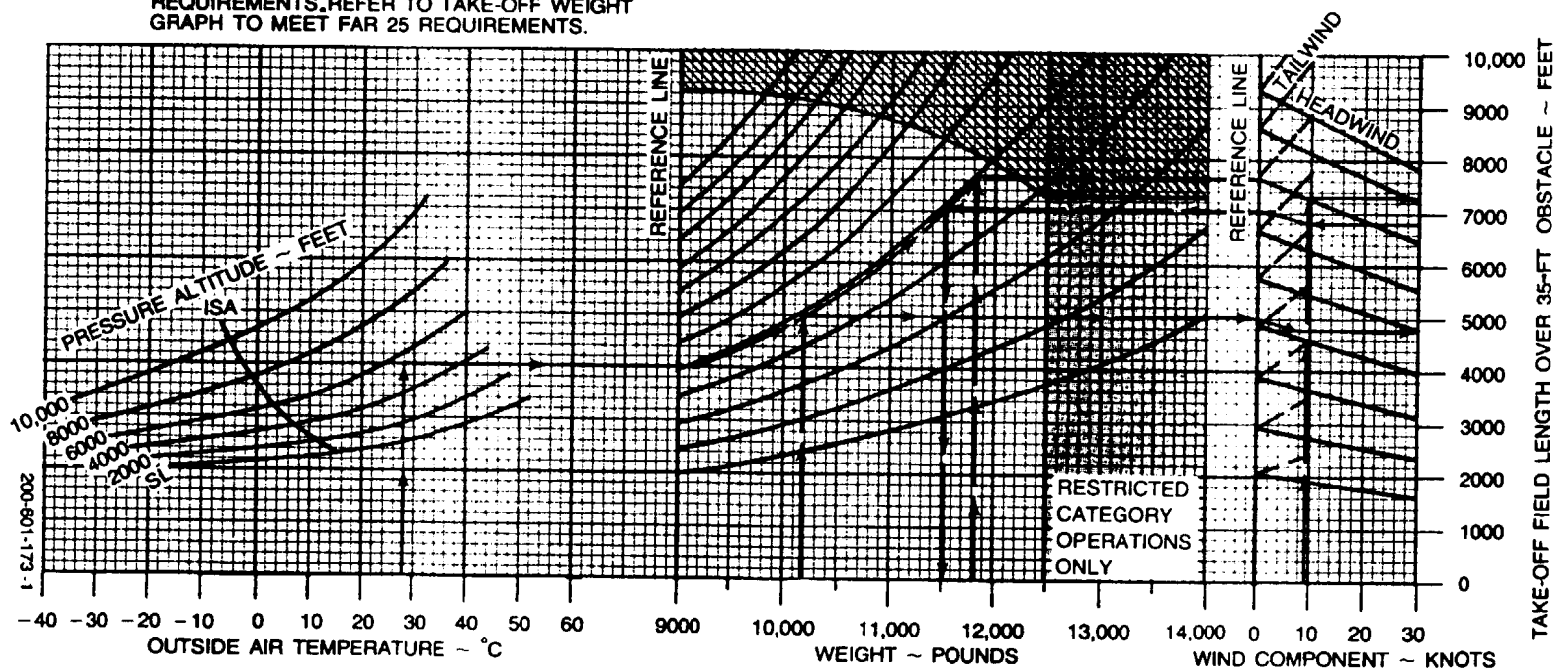

Figure 7-24. Accelerate - Go, Flaps APPROACH

NET GRADIENT OF CLIMB - FLAPS APPROACH

ASSOCIATED CONDITIONS:

POWER ..... TAKE-OFF
FLAPS ..... APPROACH
LANDING GEAR ..... UP
INOPERATIVE
PROPELLER ..... FEATHERED

WEIGHT ~ POUNDS	CLIMB SPEED ~ KNOTS
14,000	108
13,000	106
12,500	105
12,000	104
11,000	103
10,000	101
9000	99

EXAMPLE:

OAT ..... 28°C
PRESSURE ALTITUDE ..... 5430 FT

TAKE-OFF WEIGHT ~ POUNDS	NET GRADIENT ~ %
11,520	1.5
LESS THAN 9000	5.2
10,175	3.0

CLIMB SPEED @ 10,175 LBS. ..... 101 KTS

NOTE: NET GRADIENT OF CLIMB IS EQUAL TO ACTUAL GRADIENT OF CLIMB IN PERCENT MINUS 0.8 PERCENT

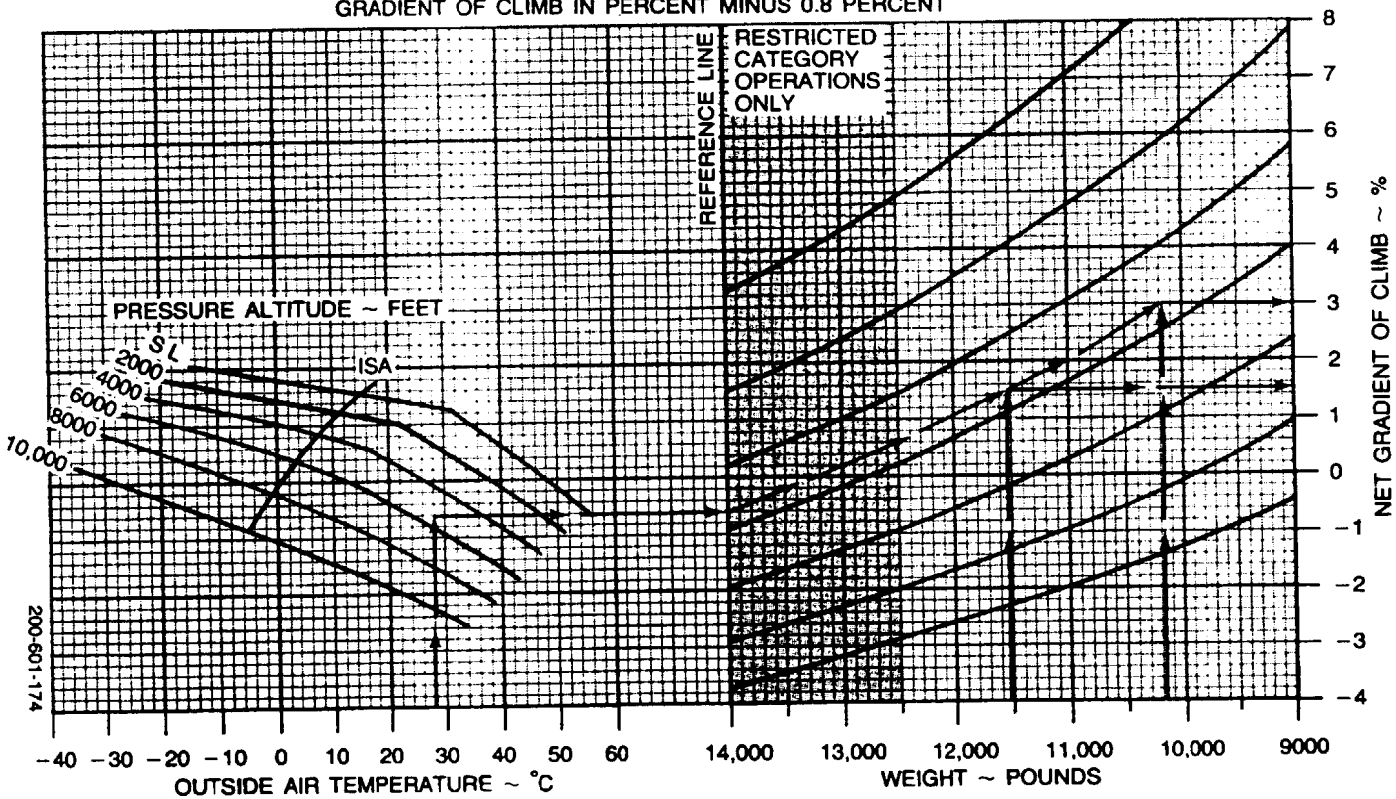

Figure 7-25. Net Gradient of Climb, Flaps **APPROACH**

CLIMB - TWO ENGINES - FLAPS UP

ASSOCIATED CONDITIONS:

POWER	MAXIMUM CONTINUOUS
FLAPS	UP
LANDING GEAR	UP

SUBTRACT 100 FT. PER MINUTE FROM GRAPH VALUE

WEIGHT ~ POUNDS	CLIMB SPEED ~ KNOTS
14,000	129
13,000	126
12,500	125
12,000	123
11,000	121
10,000	118
9000	115

EXAMPLE:

OAT	-6°C
PRESSURE ALTITUDE	18,000 FT
WEIGHT	12,391 LBS
RATE OF CLIMB	1340 FT/MIN
CLIMB GRADIENT	7.9%
CLIMB SPEED	125 KNOTS

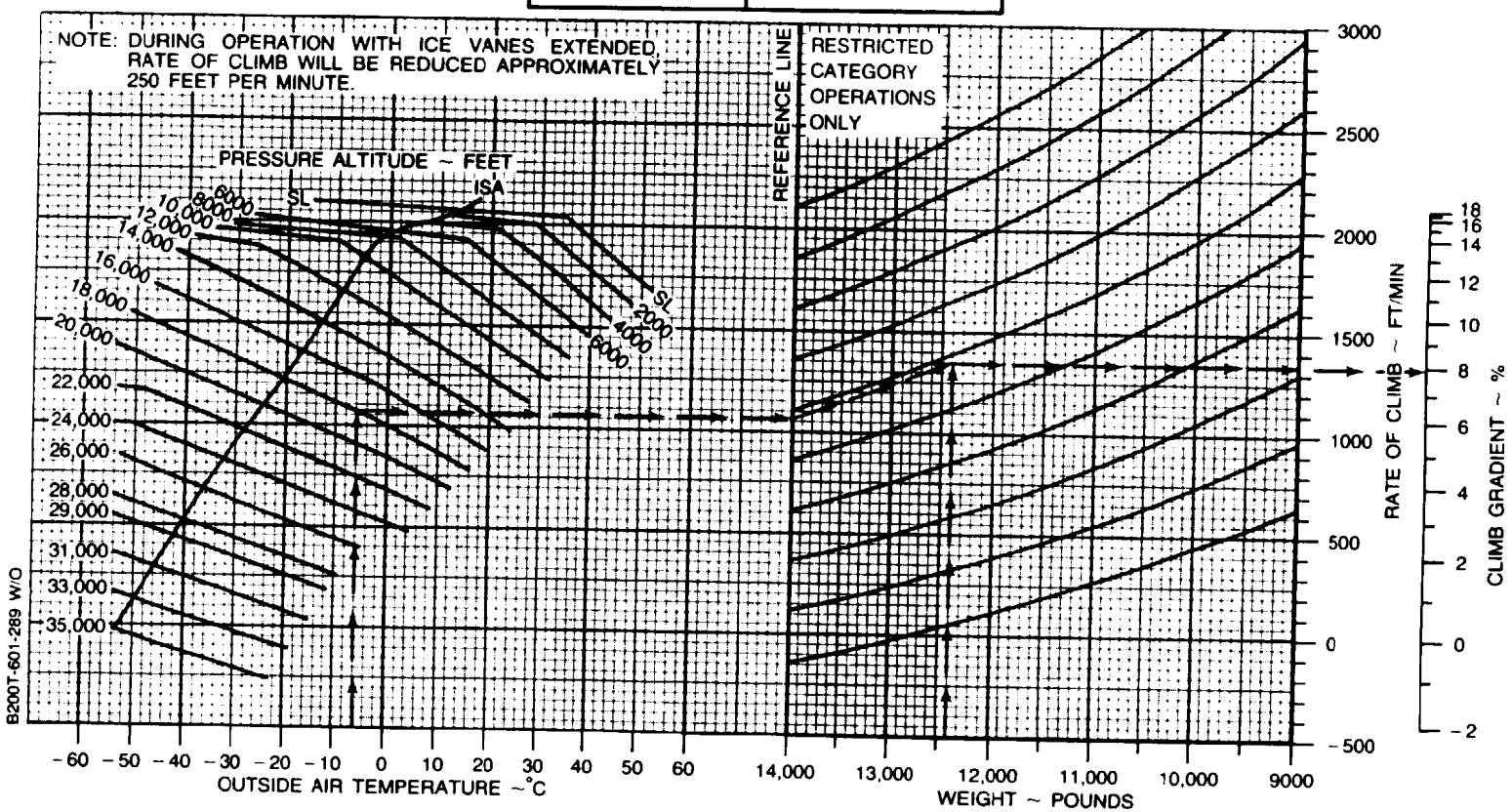

Figure 7-26. Climb - Two Engines, Flaps **UP**

CLIMB - TWO ENGINES - FLAPS APPROACH

ASSOCIATED CONDITIONS:

POWER ..... MAXIMUM CONTINUOUS
FLAPS ..... APPROACH
LANDING GEAR ..... UP

SUBTRACT 100 FT. PER MINUTE FROM GRAPH VALUE

WEIGHT ~ POUNDS	CLIMB SPEED ~ KNOTS
14,000	129
13,000	126
12,500	125
12,000	123
11,000	121
10,000	118
9000	115

EXAMPLE:

OAT ..... −6°C
PRESSURE ALTITUDE ..... 18,000 FT
WEIGHT ..... 12,391 LBS

RATE OF CLIMB ..... 1135 FT/MIN
CLIMB GRADIENT 6.8%
CLIMB SPEED ..... 125 KNOTS

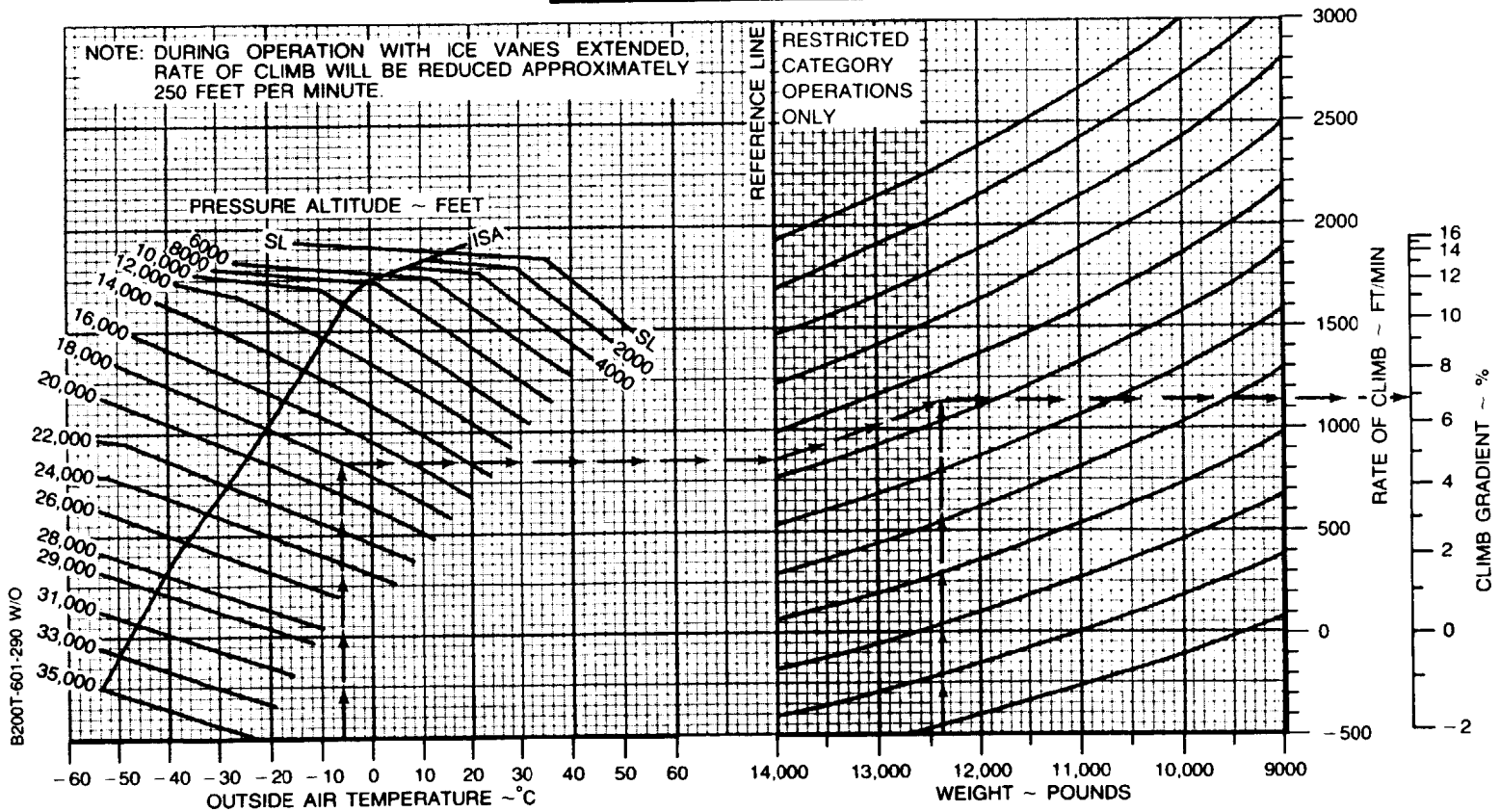

Figure 7-27. Climb - Two Engines, Flaps **APPROACH**

CLIMB - ONE ENGINE INOPERATIVE

ASSOCIATED CONDITIONS:

POWER	MAXIMUM CONTINUOUS
FLAPS	UP
LANDING GEAR	UP
INOPERATIVE PROPELLER	FEATHERED

WEIGHT ~ POUNDS	CLIMB SPEED ~ KNOTS
14,000	124
12,500	121
12,000	119
11,000	117
10,000	114
9000	111

EXAMPLE:

OAT	−6°C
PRESSURE ALTITUDE	18,000 FT
WEIGHT	12,391 LBS
RATE OF CLIMB	80 FT/MIN
CLIMB GRADIENT	0.5%
CLIMB SPEED	121 KNOTS

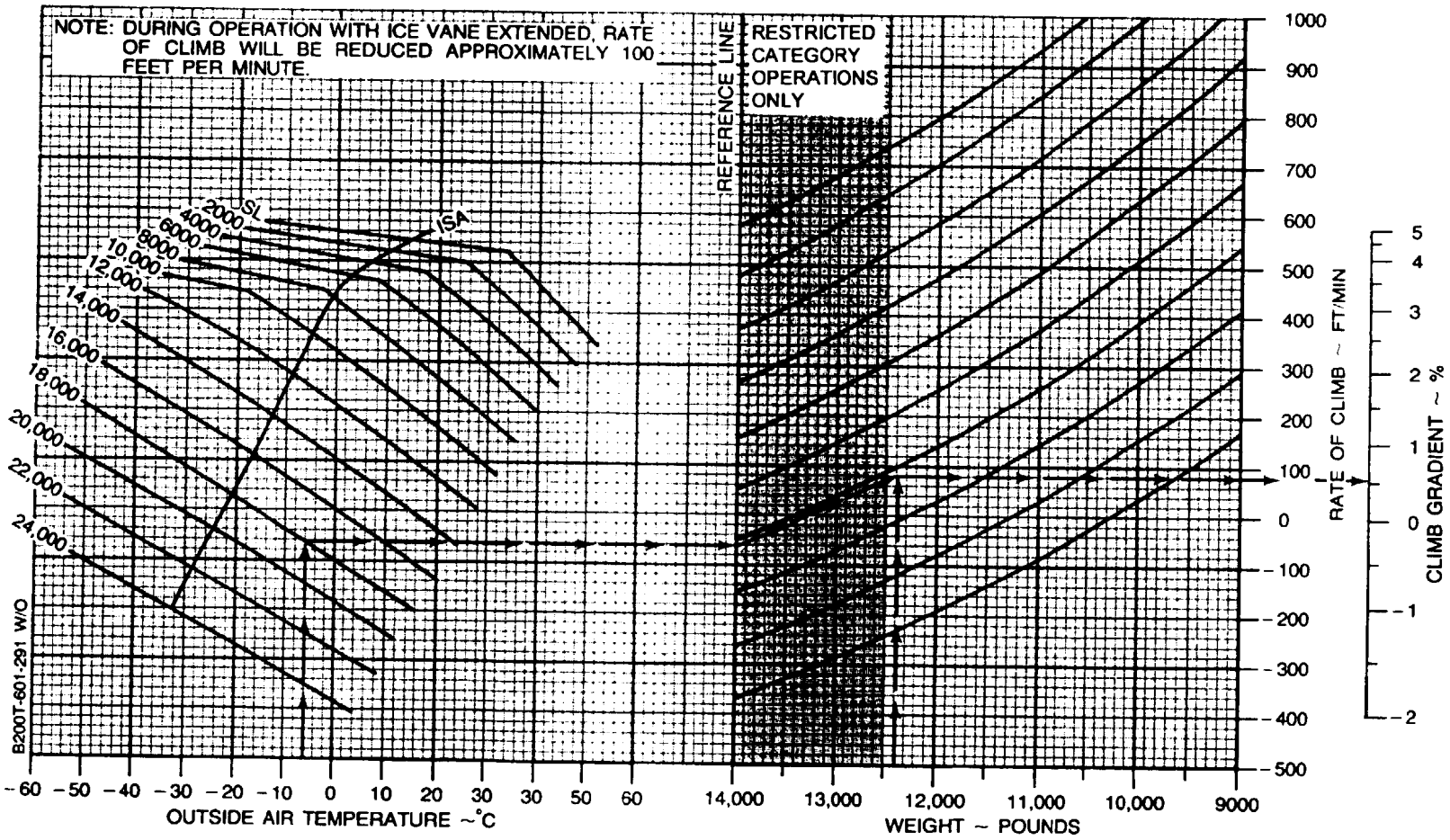

Figure 7-28. Climb - One Engine Inoperative

SERVICE CEILING - ONE ENGINE INOPERATIVE

ASSOCIATED CONDITIONS:

POWER . . . . . MAXIMUM CONTINUOUS
LANDING GEAR . . . . . UP
INOPERATIVE PROPELLER FEATHERED
FLAPS . . . . . UP

NOTE: SERVICE CEILING IS THE MAXIMUM PRESSURE ALTITUDE AT WHICH THE AIRPLANE IS CAPABLE OF CLIMBING 50 FT/MINUTE WITH ONE PROPELLER FEATHERED.

EXAMPLE:

OAT AT MEA (WORST LEG) . . . . 0°C
WEIGHT. . . . . .12,391 LBS
ROUTE SEGMENT MEA 18,000 FT

SERVICE CEILING 18,100 FT

NOTE: SERVICE CEILING IS ABOVE ENROUTE MEA.

NOTE: DURING OPERATION WITH ICE VANE EXTENDED, SERVICE CEILING WILL BE LOWERED APPROXIMATELY 1500 FEET.

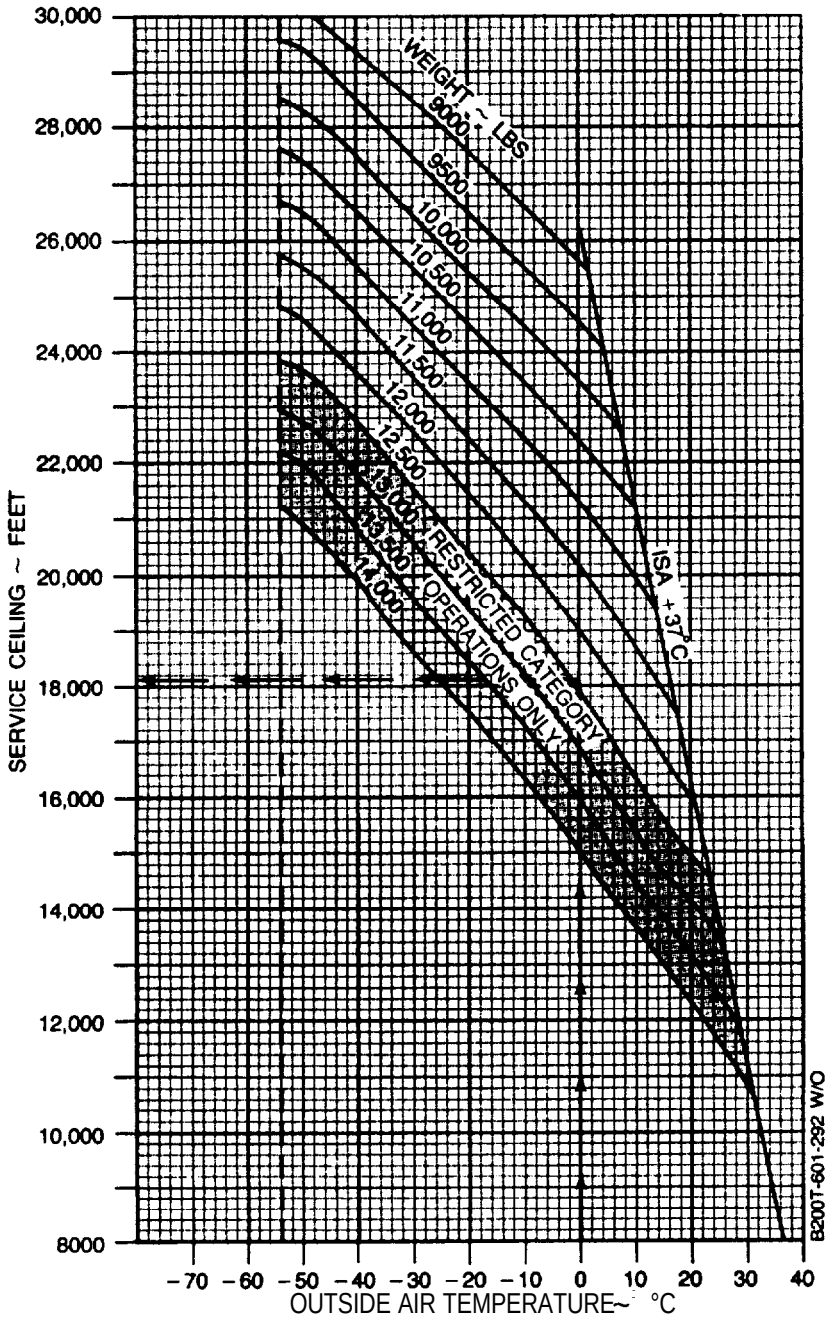

Figure 7-29. Service Ceiling - One Engine Inoperative

TIME, FUEL, AND DISTANCE TO CLIMB

ASSOCIATED CONDITIONS:

PROPELLER SPEED	1900 RPM
ITT	770°C
OR TORQUE	100%

ALTITUDE ~ FEET	CLIMB SPEED ~ KNOTS
SL TO 10,000	160
10,000 TO 20,000	140
20,000 TO 25,000	130
25,000 TO 35,000	120

NOTE:
1. ADD 90 LBS FUEL FOR START, TAXI, AND TAKEOFF.
2. FOR OPERATION WITH ICE VANES EXTENDED, ADD 20°C TO THE ACTUAL OAT BEFORE ENTERING THE GRAPH.

EXAMPLE:

OAT AT TAKEOFF	28°C
OAT AT CRUISE	−10°C
AIRPORT PRESSURE ALTITUDE	5433 FT
CRUISE ALTITUDE	26,000 FT
INITIAL CLIMB WEIGHT	12,500 LBS
TIME TO CLIMB (21-3)	18 MIN
FUEL TO CLIMB (265-43)	222 LBS
DISTANCE TO CLIMB (63-8)	55 NM

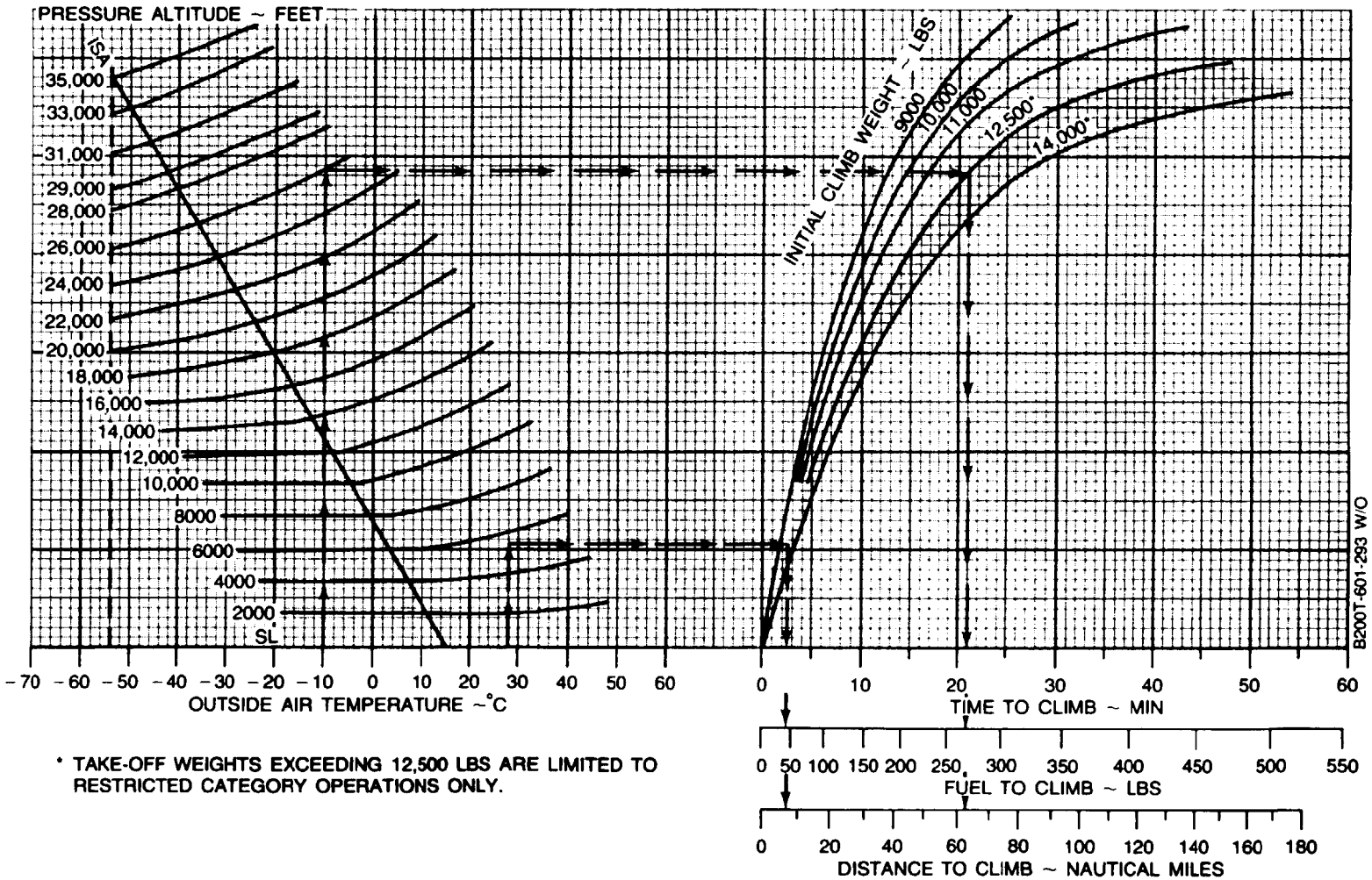

* TAKE-OFF WEIGHTS EXCEEDING 12,500 LBS ARE LIMITED TO RESTRICTED CATEGORY OPERATIONS ONLY.

Figure 7-30. Time, Fuel, and Distance to Climb

NORMAL CRUISE POWER

1700 RPM

ISA - 30°C

NOTE: IOAT, TORQUE, AND FUEL FLOW BASED ON 12,000 POUNDS.

PRESS. ALT	IOAT	OAT	TORQUE PER ENG	FUEL FLOW PER ENG	TOTAL FUEL FLOW	AIRSPEED ~ KNOTS							
						13,000 LBS		12,000 LBS		11,000 LBS		10,000 LBS	
FEET	°C	°C	PERCENT	LBS/HR	LBS/HR	IAS	TAS	IAS	TAS	IAS	TAS	IAS	TAS
SL	-10	-15	100	465	930	240	228	241	229	242	230	242	231
2000	-14	-19	100	453	906	237	232	238	233	239	234	240	235
4000	-18	-23	100	441	882	235	236	236	237	237	238	238	239
6000	-22	-27	100	429	858	233	241	234	242	235	243	236	244
8000	-25	-31	100	417	834	231	245	232	246	233	248	234	249
10,000	-29	-35	100	407	814	228	250	230	251	231	252	231	253
12,000	-33	-39	100	397	794	226	255	227	256	228	257	229	258
14,000	-36	-43	100	390	780	224	259	225	261	226	262	227	263
16,000	-40	-47	100	384	768	221	265	222	266	224	268	225	269
18,000	-44	-51	100	380	760	219	270	220	271	221	273	222	274
20,000	- - -	- - -	- - -	- - -	- - -	- - -	- - -	- - -	- - -	- - -	- - -	- - -	- - -
22,000	- - -	- - -	- - -	- - -	- - -	- - -	- - -	- - -	- - -	- - -	- - -	- - -	- - -
24,000	- - -	- - -	- - -	- - -	- - -	- - -	- - -	- - -	- - -	- - -	- - -	- - -	- - -
26,000	- - -	- - -	- - -	- - -	- - -	- - -	- - -	- - -	- - -	- - -	- - -	- - -	- - -
28,000	- - -	- - -	- - -	- - -	- - -	- - -	- - -	- - -	- - -	- - -	- - -	- - -	- - -
29,000	- - -	- - -	- - -	- - -	- - -	- - -	- - -	- - -	- - -	- - -	- - -	- - -	- - -
31,000	- - -	- - -	- - -	- - -	- - -	- - -	- - -	- - -	- - -	- - -	- - -	- - -	- - -
33,000	- - -	- - -	- - -	- - -	- - -	- - -	- - -	- - -	- - -	- - -	- - -	- - -	- - -
35,000	- - -	- - -	- - -	- - -	- - -	- - -	- - -	- - -	- - -	- - -	- - -	- - -	- - -

BT05711

Figure 7-31. Normal Cruise Power, 1700 RPM, ISA -30°C

NORMAL CRUISE POWER

1700 RPM

ISA - 20°C

NOTE: IOAT, TORQUE, AND FUEL FLOW BASED ON 12,000 POUNDS.

PRESS. ALT	IOAT	OAT	TORQUE PER ENG	FUEL FLOW PER ENG	TOTAL FUEL FLOW	AIRSPEED ~ KNOTS							
						13,000 LBS		12,000 LBS		11,000 LBS		10,000 LBS	
FEET	°C	°C	PERCENT	LBS/HR	LBS/HR	IAS	TAS	IAS	TAS	IAS	TAS	IAS	TAS
SL	0	-5	100	467	934	238	231	239	232	240	232	241	233
2000	-4	-9	100	454	908	236	235	237	236	238	237	239	238
4000	-8	-13	100	440	880	233	239	234	240	235	241	236	242
6000	-11	-17	100	429	858	231	244	232	245	233	246	234	247
8000	-15	-21	100	419	838	229	248	230	250	231	251	232	252
10,000	-19	-25	100	409	818	226	253	228	254	229	255	230	257
12,000	-23	-29	100	398	796	224	258	225	259	226	260	227	262
14,000	-26	-33	100	391	782	222	263	223	264	224	266	225	267
16,000	-30	-37	100	386	772	219	268	221	270	222	271	223	272
18,000	-34	-41	100	382	764	216	273	218	275	219	276	220	278
20,000	-37	-45	100	379	758	213	278	215	280	216	281	218	283
22,000	-41	-49	96	362	724	207	278	209	281	211	283	212	285
24,000	-45	-53	90	340	680	199	276	201	279	203	282	205	284
26,000	- - -	- - -	- - -	- - -	- - -	- - -	- - -	- - -	- - -	- - -	- - -	- - -	- - -
28,000	- - -	- - -	- - -	- - -	- - -	- - -	- - -	- - -	- - -	- - -	- - -	- - -	- - -
29,000	- - -	- - -	- - -	- - -	- - -	- - -	- - -	- - -	- - -	- - -	- - -	- - -	- - -
31,000	- - -	- - -	- - -	- - -	- - -	- - -	- - -	- - -	- - -	- - -	- - -	- - -	- - -
33,000	- - -	- - -	- - -	- - -	- - -	- - -	- - -	- - -	- - -	- - -	- - -	- - -	- - -
35,000	- - -	- - -	- - -	- - -	- - -	- - -	- - -	- - -	- - -	- - -	- - -	- - -	- - -

BT05712

Figure 7-32. Normal Cruise Power, 1700 RPM, ISA -20°C

NORMAL CRUISE POWER

1700 RPM

ISA - 10°C

NOTE: IOAT, TORQUE, AND FUEL FLOW BASED ON 12,000 POUNDS.

PRESS. ALT	IOAT	OAT	TORQUE PER ENG	FUEL FLOW PER ENG	TOTAL FUEL FLOW	AIRSPEED ~ KNOTS							
						13,000 LBS		12,000 LBS		11,000 LBS		10,000 LBS	
FEET	°C	°C	PERCENT	LBS/HR	LBS/HR	IAS	TAS	IAS	TAS	IAS	TAS	IAS	TAS
SL	10	5	100	470	940	236	233	237	234	238	235	239	236
2000	6	1	100	457	914	234	238	235	239	236	240	237	240
4000	3	-3	100	444	888	232	242	233	243	234	244	235	245
6000	-1	-7	100	431	862	229	247	231	248	232	249	232	250
8000	-5	-11	100	420	840	227	251	228	253	229	254	230	255
10,000	-9	-15	100	409	818	225	256	226	257	227	259	228	260
12,000	-12	-19	100	400	800	222	261	223	262	225	264	226	265
14,000	-16	-23	100	393	786	220	266	221	268	222	269	223	270
16,000	-20	-27	100	388	776	217	271	218	273	220	274	222	276
18,000	-24	-31	100	384	768	214	276	216	278	217	279	218	281
20,000	-27	-35	96	367	734	208	276	210	279	211	281	213	283
22,000	-31	-39	92	349	698	201	276	203	279	205	281	207	284
24,000	-35	-43	86	326	652	193	274	195	277	197	280	199	283
26,000	-40	-47	80	303	606	184	270	187	274	189	278	191	281
28,000	-44	-51	74	279	558	174	265	177	270	180	275	183	278
29,000	-46	-52	71	267	534	168	261	172	267	176	272	179	277
31,000	- - -	- - -	- - -	- - -	- - -	- - -	- - -	- - -	- - -	- - -	- - -	- - -	- - -
33,000	- - -	- - -	- - -	- - -	- - -	- - -	- - -	- - -	- - -	- - -	- - -	- - -	- - -
35,000	- - -	- - -	- - -	- - -	- - -	- - -	- - -	- - -	- - -	- - -	- - -	- - -	- - -

BT05713

Figure 7-33. Normal Cruise Power, 1700 RPM, ISA -10°C

NORMAL CRUISE POWER

1700 RPM

ISA

NOTE: IOAT, TORQUE, AND FUEL FLOW BASED ON 12,000 POUNDS.

PRESS. ALT	IOAT	OAT	TORQUE PER ENG	FUEL FLOW PER ENG	TOTAL FUEL FLOW	AIRSPEED ~ KNOTS							
						13,000 LBS		12,000 LBS		11,000 LBS		10,000 LBS	
FEET	°C	°C	PERCENT	LBS/HR	LBS/HR	IAS	TAS	IAS	TAS	IAS	TAS	IAS	TAS
SL	20	15	100	473	946	235	236	236	237	237	238	238	239
2000	16	11	100	460	920	232	240	234	241	235	242	235	243
4000	13	7	100	446	892	230	245	231	246	232	247	233	248
6000	9	3	100	433	866	228	249	229	251	230	252	231	253
8000	5	-1	100	422	844	225	254	226	255	228	257	228	258
10,000	1	-5	100	411	822	223	259	224	260	225	262	226	263
12,000	-2	-9	100	400	800	220	264	222	266	223	267	224	268
14,000	-6	-13	100	393	786	218	269	220	271	221	272	222	274
16,000	-10	-17	100	388	776	215	274	216	276	218	277	219	279
18,000	-14	-21	96	371	742	208	274	210	276	212	279	213	280
20,000	-18	-25	92	353	706	202	274	204	277	206	279	207	281
22,000	-21	-29	87	336	672	195	274	197	277	199	280	201	282
24,000	-26	-33	82	314	628	187	271	189	275	192	278	194	281
26,000	-30	-37	76	290	580	177	267	181	272	183	276	186	279
28,000	-34	-41	70	267	534	167	261	171	267	175	272	177	276
29,000	-36	-42	67	256	512	161	256	166	264	170	269	173	274
31,000	-40	-46	61	236	472	149	246	156	256	160	264	164	270
33,000	-45	-50	56	216	432	---	---	143	245	150	257	155	265
35,000	---	---	---	---	---	---	---	---	---	---	---	---	---

BT05714

Figure 7-34. Normal Cruise Power, 1700 RPM, ISA

NORMAL CRUISE POWER

1700 RPM

ISA + 10°C

NOTE: IOAT, TORQUE, AND FUEL FLOW BASED ON 12,000 POUNDS.

PRESS. ALT	IOAT	OAT	TORQUE PER ENG	FUEL FLOW PER ENG	TOTAL FUEL FLOW	AIRSPEED ~ KNOTS							
						13,000 LBS		12,000 LBS		11,000 LBS		10,000 LBS	
FEET	°C	°C	PERCENT	LBS/HR	LBS/HR	IAS	TAS	IAS	TAS	IAS	TAS	IAS	TAS
SL	30	25	100	476	952	233	238	234	239	235	240	236	241
2000	27	21	100	462	924	231	243	232	244	233	245	234	246
4000	23	17	100	449	898	229	247	230	249	231	250	232	251
6000	19	13	100	437	874	226	252	227	253	228	255	229	256
8000	15	9	100	424	848	224	257	225	258	226	259	227	261
10,000	12	5	100	413	826	221	262	222	263	224	265	225	266
12,000	8	1	100	402	804	219	267	220	269	221	270	222	271
14,000	4	-3	100	395	790	216	272	217	273	219	275	220	276
16,000	0	-7	97	378	756	210	273	212	275	213	277	215	279
18,000	-4	-11	92	357	714	203	273	205	275	207	277	208	279
20,000	-8	-15	88	340	680	197	273	199	276	201	278	202	281
22,000	-12	-19	83	324	648	189	271	192	275	194	278	196	281
24,000	-16	-23	78	302	604	181	268	184	273	186	276	189	280
26,000	-20	-27	72	279	558	171	263	175	269	178	273	180	277
28,000	-24	-31	66	256	512	160	256	165	263	169	269	172	274
29,000	-26	-32	63	246	492	154	251	160	259	164	266	167	271
31,000	-31	-36	58	226	452	139	234	149	251	154	260	158	267
33,000	-36	-40	52	207	414	- - -	- - -	133	234	143	251	149	261
35,000	-40	-44	48	190	380	- - -	- - -	- - -	- - -	128	233	138	251

BT05715

Figure 7-35. Normal Cruise Power, 1700 RPM, ISA +10°C

NORMAL CRUISE POWER

1700 RPM

ISA + 20°C

NOTE: IOAT, TORQUE, AND FUEL FLOW BASED ON 12,000 POUNDS.

PRESS. ALT	IOAT	OAT	TORQUE PER ENG	FUEL FLOW PER ENG	TOTAL FUEL FLOW	AIRSPEED ~ KNOTS							
						13,000 LBS		12,000 LBS		11,000 LBS		10,000 LBS	
FEET	°C	°C	PERCENT	LBS/HR	LBS/HR	IAS	TAS	IAS	TAS	IAS	TAS	IAS	TAS
SL	40	35	100	479	958	232	241	233	242	234	243	235	244
2000	37	31	100	466	932	229	245	231	247	232	248	233	249
4000	33	27	100	452	904	227	250	228	251	229	252	230	253
6000	29	23	100	439	878	225	255	226	256	227	257	228	258
8000	25	19	100	427	854	222	260	223	261	224	262	225	263
10,000	22	15	100	416	832	220	265	221	266	222	268	223	269
12,000	18	11	99	403	806	216	269	218	271	219	272	220	274
14,000	14	7	95	381	762	210	269	212	271	213	273	215	274
16,000	10	3	91	361	722	203	269	205	272	207	274	209	276
18,000	6	-1	87	341	682	197	269	199	272	201	275	202	277
20,000	2	-5	84	327	654	191	270	194	273	195	276	197	279
22,000	-2	-9	80	312	624	184	270	187	274	189	277	191	280
24,000	-6	-13	75	291	582	175	266	179	271	182	275	184	279
26,000	-10	-17	69	268	536	165	260	170	266	173	271	176	275
28,000	-14	-21	63	246	492	153	250	159	259	163	265	167	271
29,000	-17	-22	60	236	472	145	242	153	254	158	262	162	268
31,000	-21	-26	55	216	432	- - -	- - -	140	242	149	255	153	263
33,000	-25	-30	50	200	400	- - -	- - -	- - -	- - -	136	243	143	258
35,000	-29	-34	46	184	368	- - -	- - -	- - -	- - -	- - -	- - -	131	244

BT05716

Figure 7-36. Normal Cruise Power, 1700 RPM, ISA +20°C

NORMAL CRUISE POWER

1700 RPM

ISA + 30°C

NOTE: IOAT, TORQUE, AND FUEL FLOW BASED ON 12,000 POUNDS.

PRESS. ALT	IOAT	OAT	TORQUE PER ENG	FUEL FLOW PER ENG	TOTAL FUEL FLOW	AIRSPEED ~ KNOTS							
						13,000 LBS		12,000 LBS		11,000 LBS		10,000 LBS	
FEET	°C	°C	PERCENT	LBS/HR	LBS/HR	IAS	TAS	IAS	TAS	IAS	TAS	IAS	TAS
SL	51	45	100	482	964	231	243	231	244	232	245	233	246
2000	47	41	100	468	936	228	248	229	249	230	250	231	251
4000	43	37	100	455	910	226	252	227	254	228	255	229	256
6000	39	33	100	441	882	223	257	224	259	225	260	226	261
8000	36	29	100	429	858	221	262	222	264	223	265	224	266
10,000	32	25	97	409	818	216	264	217	266	219	268	220	269
12,000	28	21	93	382	764	209	264	211	266	212	268	214	270
14,000	24	17	89	362	724	203	265	205	267	206	269	208	271
16,000	20	13	85	343	686	196	265	198	268	200	270	202	272
18,000	16	9	81	325	650	190	265	192	268	194	271	197	273
20,000	12	5	79	313	626	185	266	187	270	189	273	191	276
22,000	8	1	77	301	602	179	267	182	271	184	275	186	278
24,000	4	-3	71	280	560	169	262	173	268	176	272	179	276
26,000	0	-7	66	258	516	159	255	164	262	168	268	171	273
28,000	-4	-11	60	237	474	147	244	153	255	158	263	162	269
29,000	-7	-12	58	227	454	137	232	147	250	153	259	157	266
31,000	-12	-16	52	207	414	- - -	- - -	131	231	142	250	148	260
33,000	-16	-20	47	191	382	- - -	- - -	- - -	- - -	126	230	137	251
35,000	-20	-24	43	175	350	- - -	- - -	- - -	- - -	- - -	- - -	121	230

BT05717

Figure 7-37. Normal Cruise Power, 1700 RPM, IS4 +30°C

NORMAL CRUISE POWER

1700 RPM

ISA + 37°C

NOTE: IOAT, TORQUE, AND FUEL FLOW BASED ON 12,000 POUNDS.

PRESS. ALT	IOAT	OAT	TORQUE PER ENG	FUEL FLOW PER ENG	TOTAL FUEL FLOW	AIRSPEED ~ KNOTS							
						13,000 LBS		12,000 LBS		11,000 LBS		10,000 LBS	
FEET	°C	°C	PERCENT	LBS/HR	LBS/HR	IAS	TAS	IAS	TAS	IAS	TAS	IAS	TAS
SL	58	52	100	484	968	229	245	231	246	232	247	232	248
2000	54	48	100	470	940	227	249	228	251	229	252	230	253
4000	50	44	100	456	912	225	254	226	255	227	257	228	258
6000	46	40	100	443	886	222	259	223	260	224	262	225	263
8000	42	36	96	419	838	216	260	218	262	219	263	220	265
10,000	39	32	93	395	790	210	261	212	263	214	265	215	267
12,000	35	28	88	369	738	204	261	205	263	207	265	209	267
14,000	31	24	84	350	700	197	261	200	264	201	266	203	268
16,000	27	20	81	332	664	191	261	194	265	196	267	198	270
18,000	23	16	76	315	630	185	261	188	265	190	268	192	271
20,000	19	12	76	303	606	180	263	183	267	185	270	187	273
22,000	15	8	73	291	582	174	263	177	268	180	272	182	275
24,000	11	4	69	271	542	165	258	169	264	172	270	175	274
26,000	7	0	63	250	500	154	251	160	259	164	266	167	271
28,000	2	-4	58	230	460	140	237	149	251	154	260	158	266
29,000	0	-5	55	220	440	---	---	142	244	149	256	154	263
31,000	-4	-9	51	203	406	---	---	---	---	137	245	144	257
33,000	-8	-13	47	188	376	---	---	---	---	---	---	133	246
35,000	---	---	---	---	---	---	---	---	---	---	---	---	---

BT05718

Figure 7-38. Normal Cruise Power, 1700 RPM, ISA +37°C

NORMAL CRUISE SPEEDS

1700 RPM

WEIGHT 12,000 LBS

NOTE: DURING OPERATION WITH ICE VANES EXTENDED, TRUE AIRSPEED WILL BE REDUCED APPROXIMATELY 30 KNOTS IF ORIGINAL POWER IS NOT OR CANNOT BE RESET, BUT WILL BE UNCHANGED IF THE ORIGINAL POWER IS RESET.

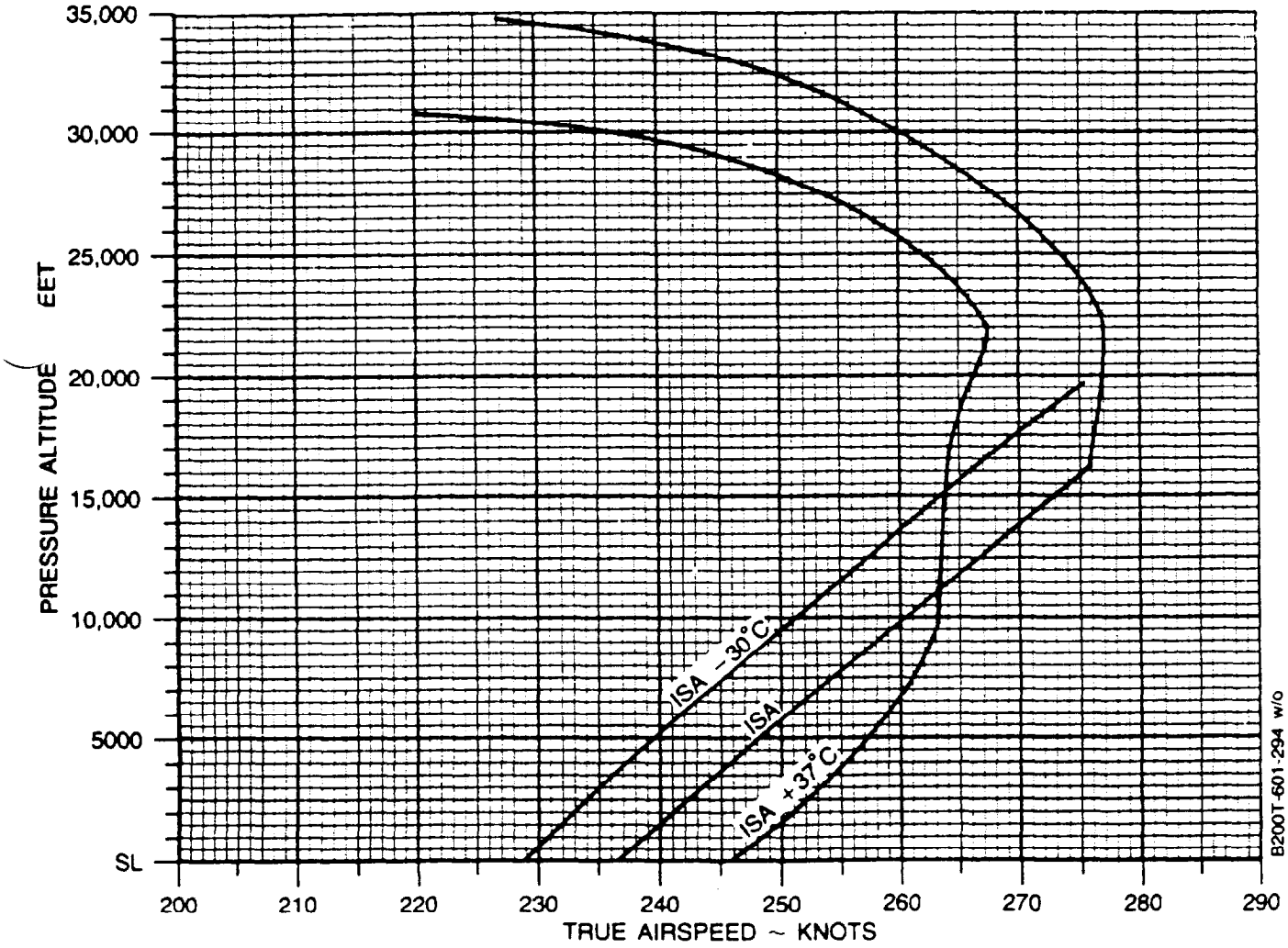

Figure 7-39. Normal Cruise Speeds, 1700 RPM

NORMAL CRUISE POWER

1700 RPM

NOTES: 1. DURING OPERATION WITH ICE VANES EXTENDED TORQUE WILL DECREASE APPROXIMATELY 20%

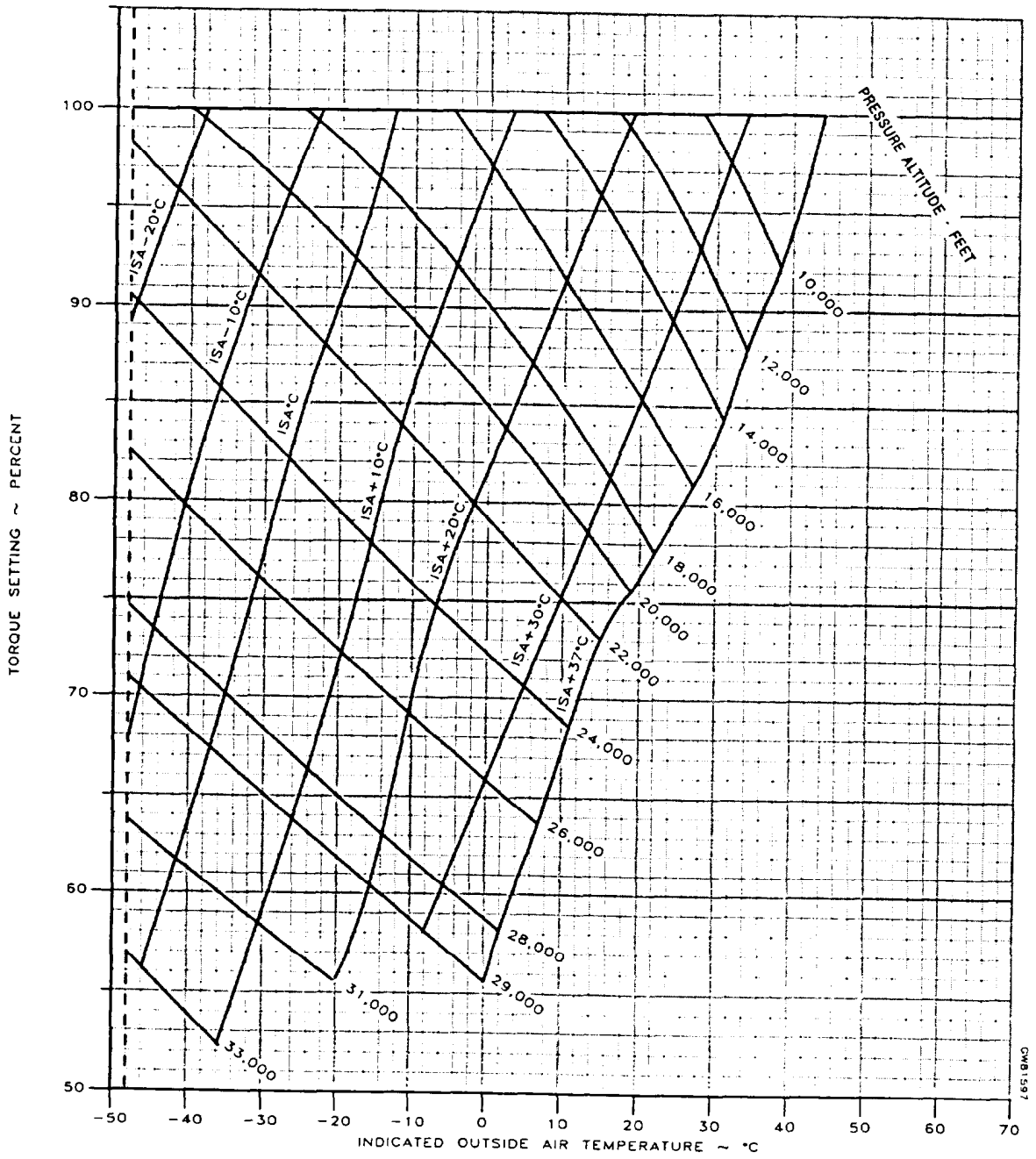

Figure 7-40. Maximum Cruise Power, 1800 RPM, ISA +20°C

FUEL FLOW AT NORMAL CRUISE POWER

1700 RPM

NOTE: DURING OPERATION WITH ICE VANES EXTENDED, FUEL FLOW WILL DECREASE APPROXIMATELY 10% IF ORIGINAL POWER IS NOT OR CANNOT BE RESET. IF ORIGINAL POWER IS RESET, FUEL FLOW WILL INCREASE APPROXIMATELY 30 LBS/HR/ENG.

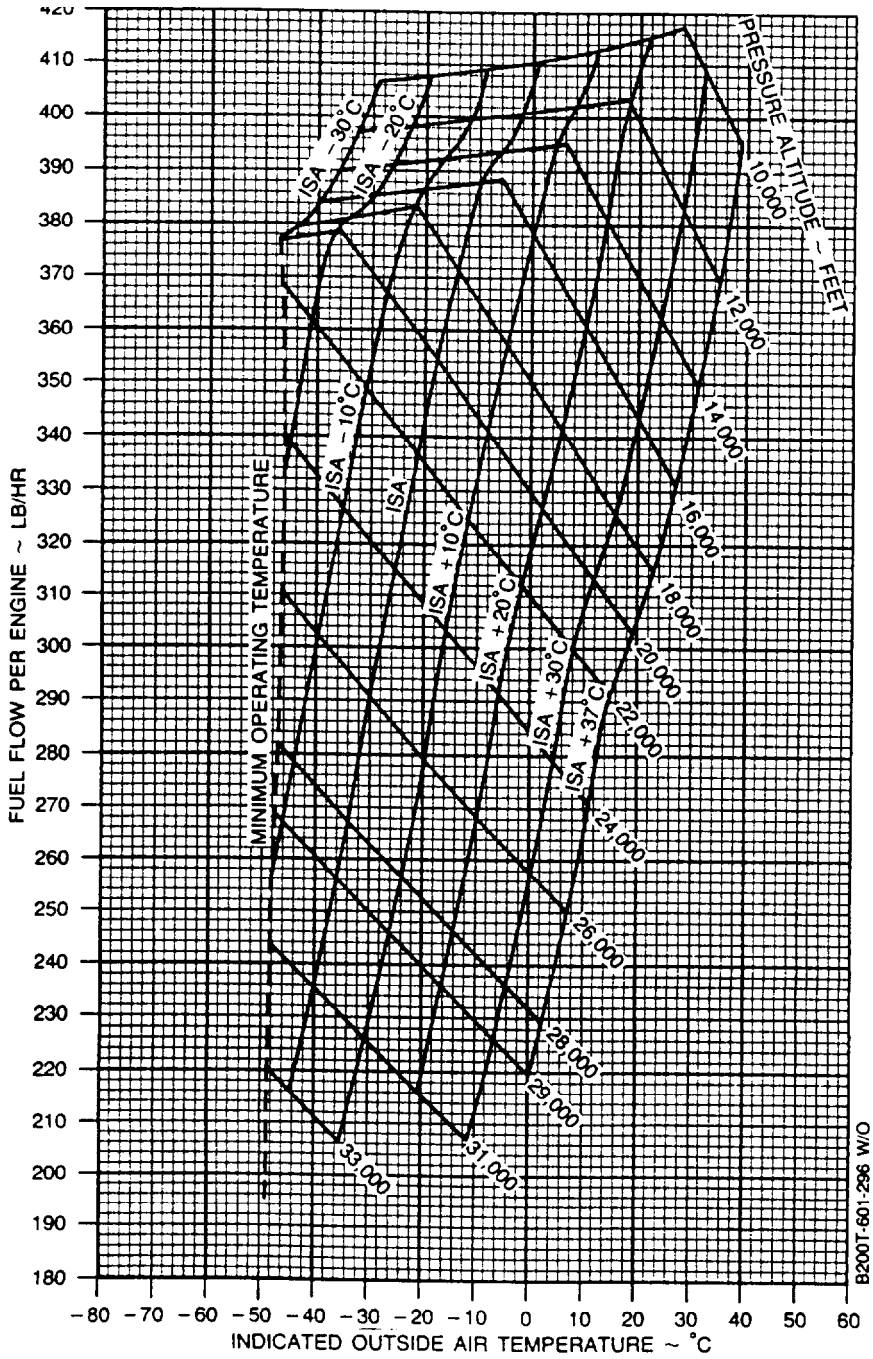

Figure 7-41. Fuel Flow At Normal Cruise Power, 1700 RPM

RANGE PROFILE - NORMAL CRUISE POWER

1700 RPM

STANDARD DAY (ISA)
ZERO WIND

ASSOCIATED CONDITIONS:

WEIGHT	14,090 LBS BEFORE ENGINE START
FUEL	AVIATION KEROSENE
FUEL DENSITY	6.7 LBS /GAL
ICE VANES	RETRACTED

EXAMPLE:

PRESSURE ALTITUDE	26,000 FT
FUEL USED	2586 LBS
RANGE	977 NM

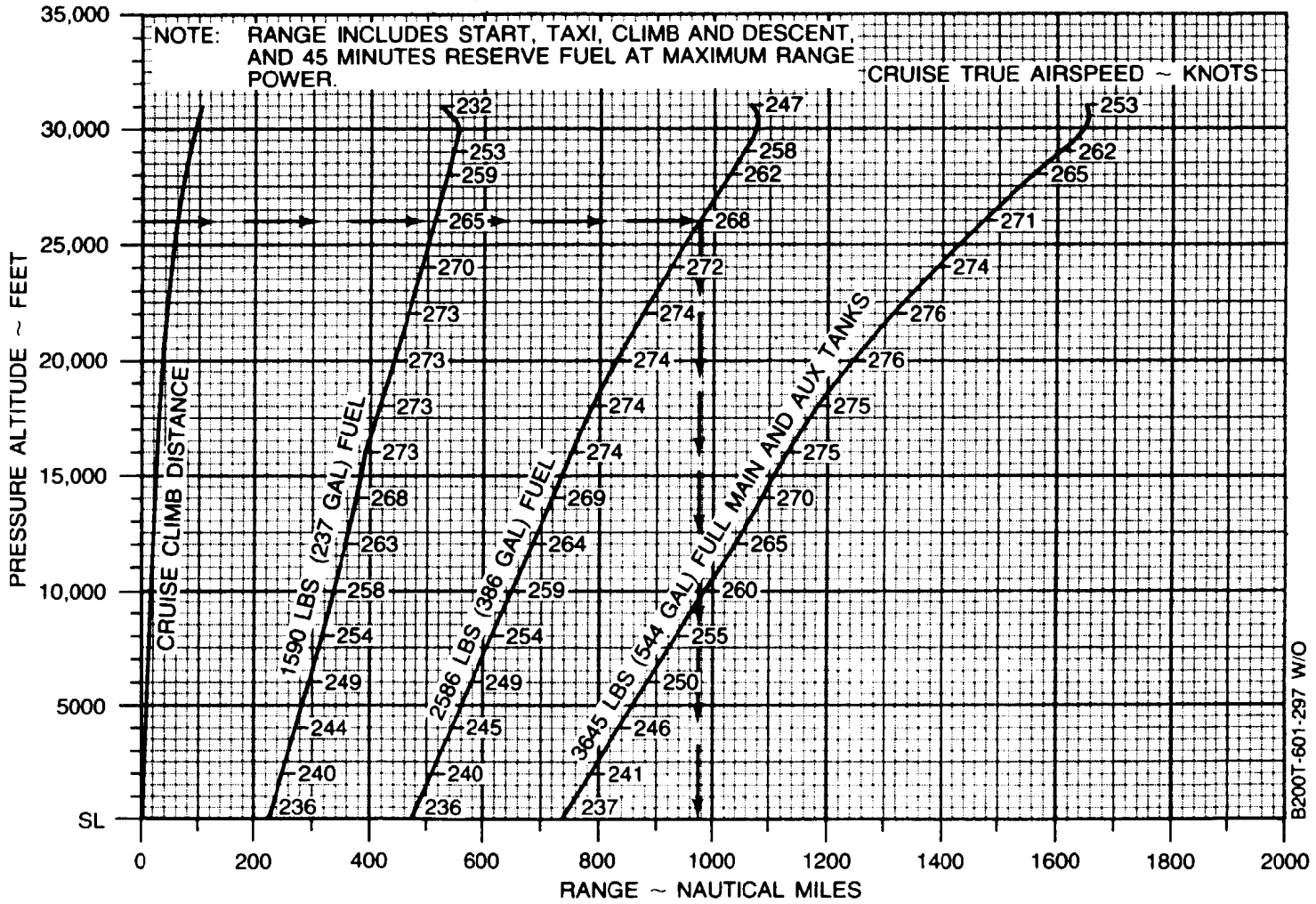

Figure 7-42. Range Profile - Normal Cruise Power, 1700 RPM

MAXIMUM CRUISE POWER

1700 RPM

ISA - 30°C

NOTE: IOAT, TORQUE, AND FUEL FLOW BASED ON 12.000 POUNDS.

PRESS. ALT	IOAT	OAT	TORQUE PER ENG	FUEL FLOW PER ENG	TOTAL FUEL FLOW	AIRSPEED ~ KNOTS							
						13,000 LBS		12,000 LBS		11,000 LBS		10,000 LBS	
FEET	°C	°C	PERCENT	LBS/HR	LBS/HR	IAS	TAS	IAS	TAS	IAS	TAS	IAS	TAS
SL	-10	-15	100	465	930	240	228	241	229	242	230	242	231
2000	-14	-19	100	453	906	237	232	238	233	239	234	240	235
4000	-18	-23	100	441	882	235	236	236	237	237	238	238	239
6000	-22	-27	100	429	858	233	241	234	242	235	243	236	244
8000	-25	-31	100	417	834	231	245	232	246	233	248	234	249
10,000	-29	-35	100	407	814	228	250	230	251	231	252	231	253
12,000	-33	-39	100	397	794	226	255	228	256	228	257	229	258
14,000	-36	-43	100	390	780	223	259	225	261	226	262	227	263
16,000	-40	-47	100	384	768	221	265	222	266	224	268	225	269
18,000	-44	-51	100	380	760	219	270	220	271	221	273	222	274
20,000	- - -	- - -	- - -	- - -	- - -	- - -	- - -	- - -	- - -	- - -	- - -	- - -	- - -
22,000	- - -	- - -	- - -	- - -	- - -	- - -	- - -	- - -	- - -	- - -	- - -	- - -	- - -
24,000	- - -	- - -	- - -	- - -	- - -	- - -	- - -	- - -	- - -	- - -	- - -	- - -	- - -
26,000	- - -	- - -	- - -	- - -	- - -	- - -	- - -	- - -	- - -	- - -	- - -	- - -	- - -
28,000	- - -	- - -	- - -	- - -	- - -	- - -	- - -	- - -	- - -	- - -	- - -	- - -	- - -
29,000	- - -	- - -	- - -	- - -	- - -	- - -	- - -	- - -	- - -	- - -	- - -	- - -	- - -
31,000	- - -	- - -	- - -	- - -	- - -	- - -	- - -	- - -	- - -	- - -	- - -	- - -	- - -
33,000	- - -	- - -	- - -	- - -	- - -	- - -	- - -	- - -	- - -	- - -	- - -	- - -	- - -
35,000	- - -	- - -	- - -	- - -	- - -	- - -	- - -	- - -	- - -	- - -	- - -	- - -	- - -

BT05719

Figure 7-43. Maximum Cruise Power, 1700 RPM, ISA -30°C

MAXIMUM CRUISE POWER

1700 RPM

ISA - 20°C

NOTE: IOAT, TORQUE, AND FUEL FLOW BASED ON 12.000 POUNDS.

PRESS. ALT	IOAT	OAT	TORQUE PER ENG	FUEL FLOW PER ENG	TOTAL FUEL FLOW	AIRSPEED ~ KNOTS							
						13,000 LBS		12,000 LBS		11,000 LBS		10,000 LBS	
FEET	°C	°C	PERCENT	LBS/HR	LBS/HR	IAS	TAS	IAS	TAS	IAS	TAS	IAS	TAS
SL	0	-5	100	467	934	238	231	239	232	240	232	241	233
2000	-4	-9	100	454	908	236	235	237	236	238	237	239	238
4000	-8	-13	100	440	880	233	239	234	240	235	241	236	242
6000	-11	-17	100	429	858	231	244	232	245	233	246	234	247
8000	-15	-21	100	419	838	229	248	230	250	231	251	232	252
10,000	-19	-25	100	409	818	226	253	228	254	229	255	230	257
12,000	-23	-29	100	398	796	224	258	225	259	226	260	227	262
14,000	-26	-33	100	391	782	222	263	223	264	224	266	225	267
16,000	-30	-37	100	386	772	220	268	221	270	222	271	223	272
18,000	-34	-41	100	382	764	216	273	218	275	219	276	220	278
20,000	-37	-45	100	379	758	213	278	215	280	216	281	218	283
22,000	-41	-49	100	376	752	210	283	212	285	214	287	215	288
24,000	-45	-53	94	352	704	202	280	204	283	206	286	208	288
26,000	---	---	---	---	---	---	---	---	---	---	---	---	---
28,000	---	---	---	---	---	---	---	---	---	---	---	---	---
29,000	---	---	---	---	---	---	---	---	---	---	---	---	---
31,000	---	---	---	---	---	---	---	---	---	---	---	---	---
33,000	---	---	---	---	---	---	---	---	---	---	---	---	---
35,000	---	---	---	---	---	---	---	---	---	---	---	---	---

BT05720

Figure 7-44. Maximum Cruise Power, 1700 RPM, ISA -20°C

MAXIMUM CRUISE POWER

1700 RPM

ISA - 10°C

NOTE: IOAT, TORQUE, AND FUEL FLOW BASED ON 12,000 POUNDS.

PRESS. ALT	IOAT	OAT	TORQUE PER ENG	FUEL FLOW PER ENG	TOTAL FUEL FLOW	AIRSPEED ~ KNOTS							
						13,000 LBS		12,000 LBS		11,000 LBS		10,000 LBS	
FEET	°C	°C	PERCENT	LBS/HR	LBS/HR	IAS	TAS	IAS	TAS	IAS	TAS	IAS	TAS
SL	10	5	100	470	940	236	233	237	234	238	235	239	236
2000	6	1	100	457	914	234	238	235	239	236	240	237	240
4000	3	-3	100	444	888	232	242	233	243	234	244	235	245
6000	-1	-7	100	431	862	229	247	231	248	232	249	232	250
8000	-5	-11	100	420	840	227	251	228	253	229	254	230	255
10,000	-9	-15	100	409	818	225	256	226	257	227	259	228	260
12,000	-12	-19	100	400	800	222	261	223	262	225	264	226	265
14,000	-16	-23	100	393	786	220	266	221	268	222	269	223	270
16,000	-20	-27	100	388	776	217	271	218	273	220	274	221	276
18,000	-24	-31	100	384	768	214	276	216	278	217	279	218	281
20,000	-27	-35	100	381	762	211	281	213	283	214	285	215	286
22,000	-31	-39	95	362	724	204	280	206	283	208	286	210	288
24,000	-35	-43	90	340	680	196	279	199	282	201	285	202	287
26,000	-39	-47	83	315	630	187	275	190	279	192	283	195	286
28,000	-43	-51	77	290	580	177	270	181	275	184	279	186	283
29,000	-46	-52	73	278	556	172	266	175	272	179	277	181	281
31,000	- - -	- - -	- - -	- - -	- - -	- - -	- - -	- - -	- - -	- - -	- - -	- - -	- - -
33,000	- - -	- - -	- - -	- - -	- - -	- - -	- - -	- - -	- - -	- - -	- - -	- - -	- - -
35,000	- - -	- - -	- - -	- - -	- - -	- - -	- - -	- - -	- - -	- - -	- - -	- - -	- - -

BT05721

Figure 7-45. Maximum Cruise Power, 1700 RPM, ISA -10°C

MAXIMUM CRUISE POWER

1700 RPM

ISA

NOTE: IOAT, TORQUE, AND FUEL FLOW BASED ON 12.000 POUNDS.

PRESS. ALT	IOAT	OAT	TORQUE PER ENG	FUEL FLOW PER ENG	TOTAL FUEL FLOW	AIRSPEED ~ KNOTS							
						13,000 LBS		12,000 LBS		11,000 LBS		10,000 LBS	
FEET	°C	°C	PERCENT	LBS/HR	LBS/HR	IAS	TAS	IAS	TAS	IAS	TAS	IAS	TAS
SL	20	15	100	473	946	235	236	236	237	237	238	238	239
2000	16	11	100	460	920	232	240	234	241	235	242	235	243
4000	13	7	100	446	892	230	245	231	246	232	247	233	248
6000	9	3	100	433	866	228	249	229	251	230	252	231	253
8000	5	-1	100	422	844	225	254	226	255	228	257	228	258
10,000	1	-5	100	411	822	223	259	224	260	225	262	226	263
12,000	-2	-9	100	400	800	220	264	222	266	223	267	224	268
14,000	-6	-13	100	393	786	218	269	219	271	221	272	222	274
16,000	-10	-17	100	388	776	215	274	216	276	218	277	219	279
18,000	-13	-21	100	386	772	212	278	213	281	215	282	217	284
20,000	-17	-25	96	367	734	205	279	207	281	209	283	210	285
22,000	-21	-29	91	349	698	199	278	200	281	202	284	204	286
24,000	-25	-33	85	326	652	191	276	193	280	195	283	197	286
26,000	-29	-37	79	302	604	181	272	184	277	187	280	189	284
28,000	-34	-41	73	279	558	171	266	175	272	178	277	181	281
29,000	-36	-42	70	268	536	166	263	170	269	173	275	176	279
31,000	-40	-46	64	247	494	154	253	159	262	164	270	167	275
33,000	-45	-50	59	226	452	137	235	148	253	154	262	158	270
35,000	---	---	---	---	---	---	---	---	---	---	---	---	---

BT05722

Figure 7-46. Maximum Cruise Power, 1700 RPM, ISA

MAXIMUM CRUISE POWER

1700 RPM

ISA + 10°C

NOTE: IOAT, TORQUE, AND FUEL FLOW BASED ON 12,000 POUNDS.

PRESS. ALT	IOAT	OAT	TORQUE PER ENG	FUEL FLOW PER ENG	TOTAL FUEL FLOW	AIRSPEED ~ KNOTS							
						13,000 LBS		12,000 LBS		11,000 LBS		10,000 LBS	
FEET	°C	°C	PERCENT	LBS/HR	LBS/HR	IAS	TAS	IAS	TAS	IAS	TAS	IAS	TAS
SL	30	25	100	476	952	233	238	234	239	235	240	236	241
2000	27	21	100	462	924	231	243	232	244	233	245	234	246
4000	23	17	100	449	898	229	247	230	249	231	250	232	251
6000	19	13	100	437	874	226	252	227	253	228	255	229	256
8000	15	9	100	424	848	224	257	225	258	226	259	227	261
10,000	12	5	100	413	826	221	262	223	263	224	265	225	266
12,000	8	1	100	402	804	219	267	220	269	221	270	222	271
14,000	4	-3	100	395	790	216	272	217	273	219	275	220	276
16,000	0	-7	100	389	778	213	277	214	278	216	280	217	282
18,000	-3	-11	96	370	740	206	277	209	279	210	281	211	283
20,000	-7	-15	92	353	706	200	277	202	280	204	282	205	285
22,000	-11	-19	87	336	672	192	276	195	279	197	282	199	285
24,000	-15	-23	81	314	628	184	273	187	277	189	281	191	284
26,000	-20	-27	76	290	580	175	268	178	274	181	278	184	282
28,000	-24	-31	70	268	536	164	262	169	269	172	274	175	279
29,000	-26	-32	67	257	514	158	257	163	265	167	271	171	277
31,000	-30	-36	61	237	474	145	245	153	257	158	265	162	272
33,000	-35	-40	56	217	434	- - -	- - -	140	245	148	258	153	267
35,000	-41	-44	49	194	388	- - -	- - -	- - -	- - -	134	245	142	259

BT05723

Figure 7-47. Maximum Cruise Power, 1700 RPM, ISA +10°C

MAXIMUM CRUISE POWER

1700 RPM

ISA + 20°C

NOTE: IOAT, TORQUE, AND FUEL FLOW BASED ON 12,000 POUNDS.

PRESS. ALT	IOAT	OAT	TORQUE PER ENG	FUEL FLOW PER ENG	TOTAL FUEL FLOW	AIRSPEED ~ KNOTS							
						13,000 LBS		12,000 LBS		11,000 LBS		10,000 LBS	
FEET	°C	°C	PERCENT	LBS/HR	LBS/HR	IAS	TAS	IAS	TAS	IAS	TAS	IAS	TAS
SL	40	35	100	479	958	232	241	233	242	234	243	235	244
2000	37	31	100	466	932	229	245	231	247	232	248	233	249
4000	33	27	100	452	904	229	240	228	251	229	252	230	253
6000	29	23	100	439	878	225	255	226	256	227	257	228	258
8000	25	19	100	427	854	222	260	223	261	224	262	225	263
10,000	22	15	100	416	832	220	265	221	266	222	268	223	269
12,000	18	11	100	405	810	217	270	218	271	220	273	221	274
14,000	14	7	98	390	780	212	272	214	274	215	276	217	278
16,000	10	3	94	372	744	206	273	208	275	210	278	211	279
18,000	6	-1	91	354	708	200	274	202	276	204	279	206	281
20,000	3	-5	87	339	678	194	274	196	277	198	280	200	283
22,000	-1	-9	83	323	646	187	274	190	278	192	281	195	284
24,000	-6	-13	78	302	604	179	271	182	275	185	279	187	283
26,000	-10	-17	72	279	558	169	265	173	271	176	276	179	280
28,000	-14	-21	66	257	514	157	257	162	264	167	271	170	276
29,000	-16	-22	60	236	472	151	251	157	260	162	268	165	273
31,000	-21	-26	55	217	434	133	230	146	251	152	261	156	269
33,000	-26	-30	49	196	392	- - -	- - -	128	229	141	252	147	262
35,000	-29	-34	46	184	368	- - -	- - -	- - -	- - -	- - -	- - -	136	252

BT05724

Figure 7-48. Maximum Cruise Power, 1700 RPM, ISA +20°C

MAXIMUM CRUISE POWER

1700 RPM

ISA + 30°C

NOTE: IOAT, TORQUE, AND FUEL FLOW BASED ON 12,000 POUNDS.

PRESS. ALT	IOAT	OAT	TORQUE PER ENG	FUEL FLOW PER ENG	TOTAL FUEL FLOW	AIRSPEED ~ KNOTS							
						13,000 LBS		12,000 LBS		11,000 LBS		10,000 LBS	
FEET	°C	°C	PERCENT	LBS/HR	LBS/HR	IAS	TAS	IAS	TAS	IAS	TAS	IAS	TAS
SL	51	45	100	482	964	230	243	231	244	232	245	233	246
2000	47	41	100	468	936	228	248	229	249	230	250	231	251
4000	43	37	100	455	910	226	252	227	254	228	255	229	256
6000	39	33	100	441	882	223	257	224	259	225	260	226	261
8000	36	29	100	429	858	221	262	222	264	223	265	224	266
10,000	32	25	99	415	830	217	266	219	268	220	270	221	271
12,000	28	21	94	387	774	210	266	212	268	213	270	215	271
14,000	24	17	91	370	740	205	267	206	269	208	272	210	273
16,000	20	13	88	353	706	199	268	201	271	203	273	204	275
18,000	16	9	85	337	674	193	269	195	272	197	275	199	277
20,000	12	5	83	325	650	188	271	190	274	193	277	194	288
22,000	8	1	79	310	620	181	271	184	275	187	278	189	281
24,000	4	-3	74	290	580	173	267	176	272	179	276	182	280
26,000	0	-7	69	268	536	163	261	167	267	171	273	174	278
28,000	-4	-11	63	247	494	151	252	157	261	162	268	165	274
29,000	-7	-12	61	237	474	144	244	151	257	157	265	161	272
31,000	-11	-16	55	217	434	- - -	- - -	138	243	146	257	151	266
33,000	-15	-20	51	201	402	- - -	- - -	- - -	- - -	133	243	141	258
35,000	-19	-24	46	185	370	- - -	- - -	- - -	- - -	- - -	- - -	128	243

BT05725

Figure 7-49. Maximum Cruise Power, 1700 RPM, ISA +30°C

MAXIMUM CRUISE POWER

1700 RPM

ISA + 37°C

NOTE: IOAT, TORQUE, AND FUEL FLOW BASED ON 12,000 POUNDS.

PRESS. ALT	IOAT	OAT	TORQUE PER ENG	FUEL FLOW PER ENG	TOTAL FUEL FLOW	AIRSPEED ~ KNOTS							
						13,000 LBS		12,000 LBS		11,000 LBS		10,000 LBS	
FEET	°C	°C	PERCENT	LBS/HR	LBS/HR	IAS	TAS	IAS	TAS	IAS	TAS	IAS	TAS
SL	58	52	100	484	968	230	245	231	246	232	247	232	248
2000	54	48	100	470	940	227	249	228	251	229	252	230	253
4000	50	44	100	456	912	225	254	226	255	227	257	228	258
6000	46	40	100	443	886	222	259	223	260	224	262	225	263
8000	43	36	98	423	846	217	261	219	263	220	265	221	266
10,000	39	32	94	399	798	211	262	213	264	215	266	216	268
12,000	35	28	89	372	744	204	262	206	264	208	266	209	268
14,000	31	24	86	356	712	200	264	201	266	203	269	205	270
16,000	27	20	84	340	680	194	265	196	268	198	270	200	273
18,000	23	16	81	325	650	188	266	191	269	193	271	195	275
20,000	19	12	79	314	628	183	267	186	271	188	274	190	277
22,000	15	8	76	301	602	177	267	180	272	183	276	185	279
24,000	11	4	71	281	562	168	263	172	269	175	274	178	278
26,000	7	0	66	260	520	158	257	163	264	167	270	170	276
28,000	3	-4	61	239	478	146	246	153	257	157	265	162	272
29,000	0	-5	58	229	458	136	234	147	252	152	261	157	269
31,000	-5	-9	53	210	420	- - -	- - -	134	234	142	253	148	263
33,000	-9	-13	49	195	390	- - -	- - -	- - -	- - -	127	236	137	254
35,000	-13	-17	45	179	358	- - -	- - -	- - -	- - -	- - -	- - -	123	237

BT05726

Figure 7-50. Maximum Cruise Power, 1700 RPM, ISA +37°C

MAXIMUM CRUISE SPEEDS

1700 RPM

WEIGHT 12,000 LBS

NOTE: DURING OPERATION WITH ICE VANES EXTENDED, TRUE AIRSPEED WILL BE REDUCED APPROXIMATELY 30 KNOTS IF ORIGINAL POWER IS NOT OR CANNOT BE RESET, BUT WILL BE UNCHANGED IF THE ORIGINAL POWER IS RESET.

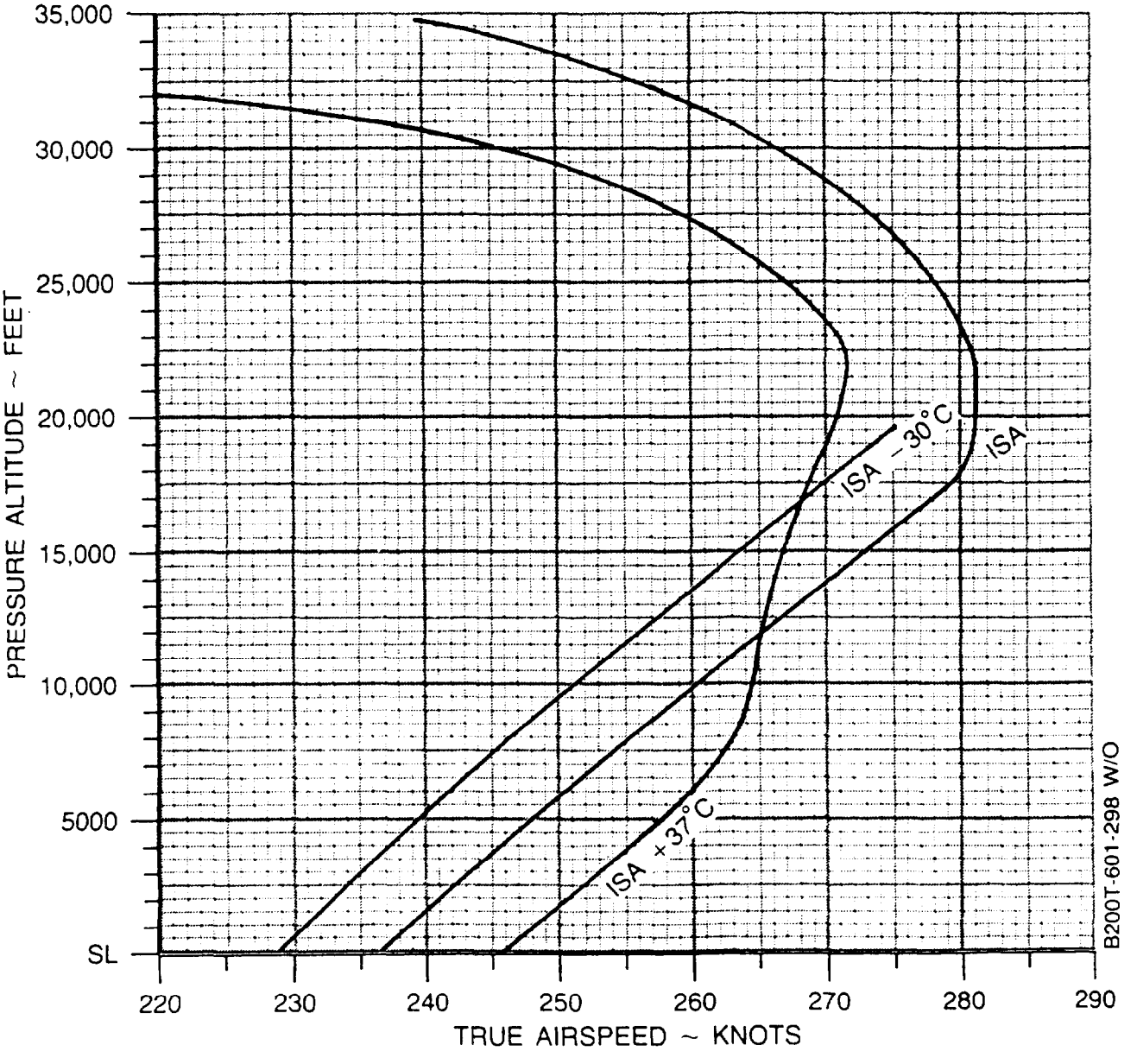

Figure 7-51. Maximum Cruise Speeds, 1700 RPM

MAXIMUM CRUISE POWER

1700 RPM

NOTES: 1. DURING OPERATION WITH ICE VANES EXTENDED, TOROUE WILL DECREASE APPROXIMATELY 20%. IF DESIRED, ORIGINAL POWER MAY BE RESET. PROVIDED ITT LIMIT IS NOT EXCEEDED

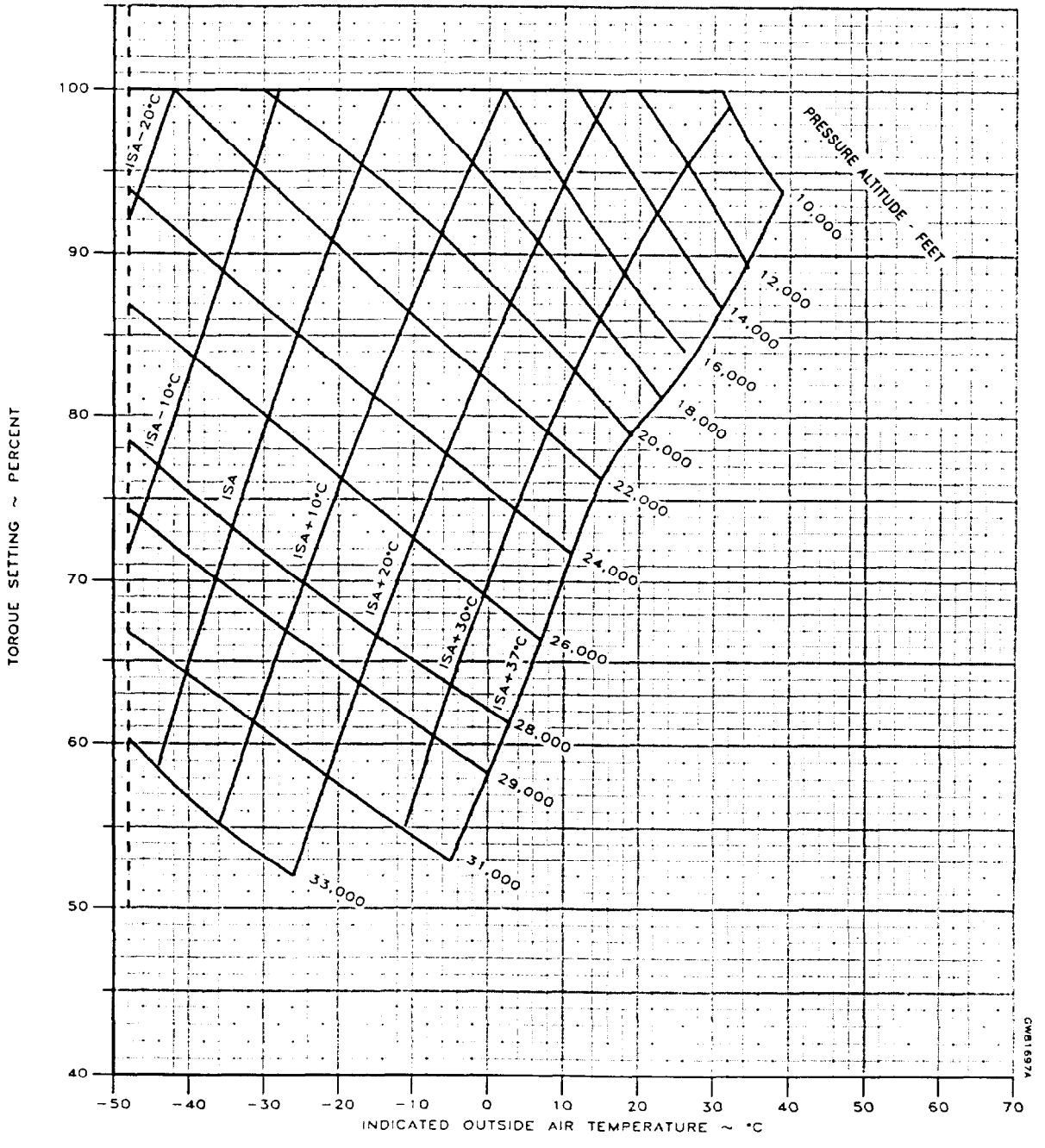

Figure 7-52. Maximum Cruise Power, 1700 RPM

FUEL FLOW AT MAXIMUM CRUISE POWER

1700 RPM

NOTE: DURING OPERATION WITH ICE VANES EXTENDED, FUEL FLOW WILL DECREASE APPROXIMATELY 10% IF ORIGINAL POWER IS NOT OR CANNOT BE RESET. IF ORIGINAL POWER IS RESET, FUEL FLOW WILL INCREASE APPROXIMATELY 30LBS/HR/ENG.

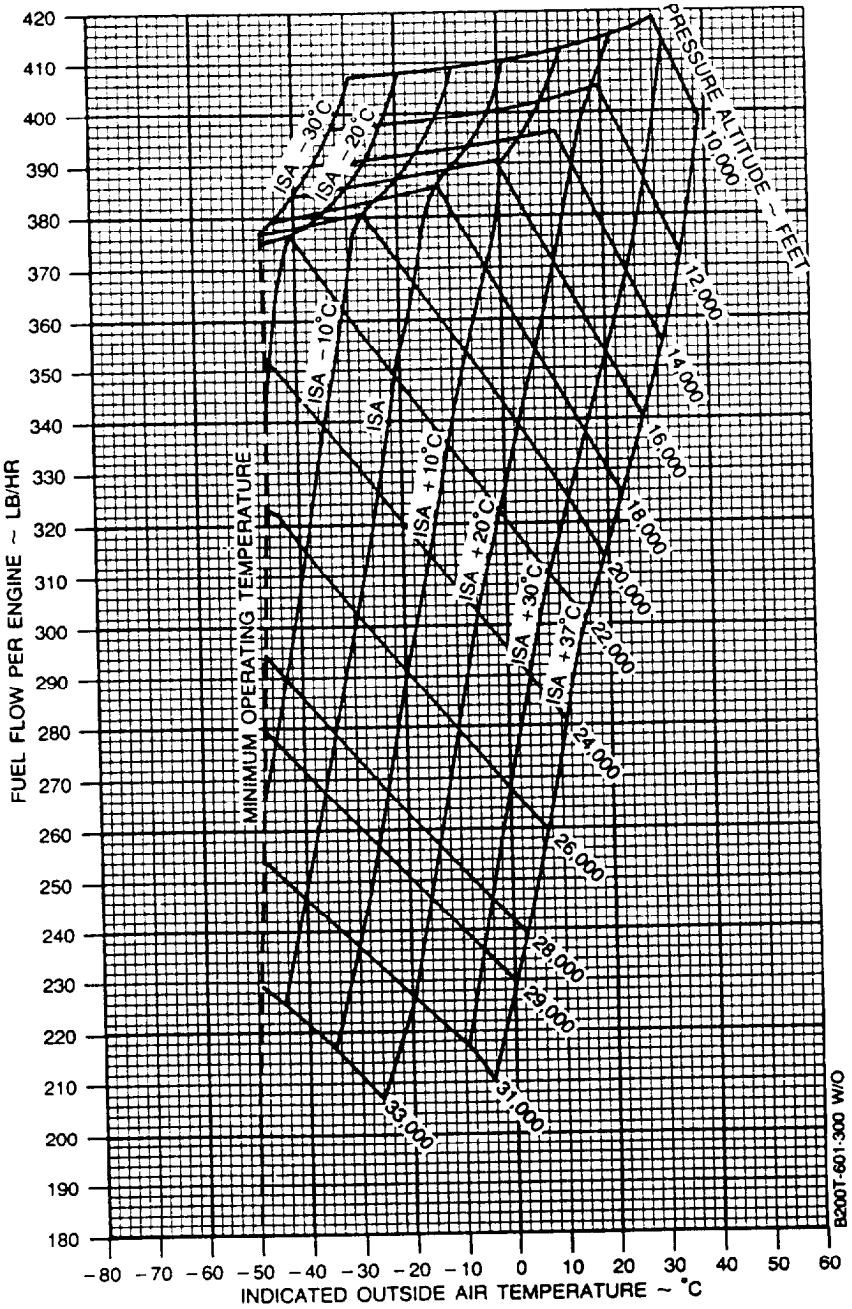

Figure 7-53. Fuel Flow At Maximum Cruise Power, 1700 RPM

RANGE PROFILE - MAXIMUM CRUISE POWER

1700 RPM

STANDARD DAY (ISA)
ZERO WIND

ASSOCIATED CONDITIONS:

WEIGHT	14,090 LBS BEFORE ENGINE START
FUEL	AVIATION KEROSENE
FUEL DENSITY	6.7 LBS/GAL
ICE VANES	RETRACTED

EXAMPLE:

PRESSURE ALTITUDE	26,000 FT
FUEL USED	2586 LBS
RANGE	960 NM

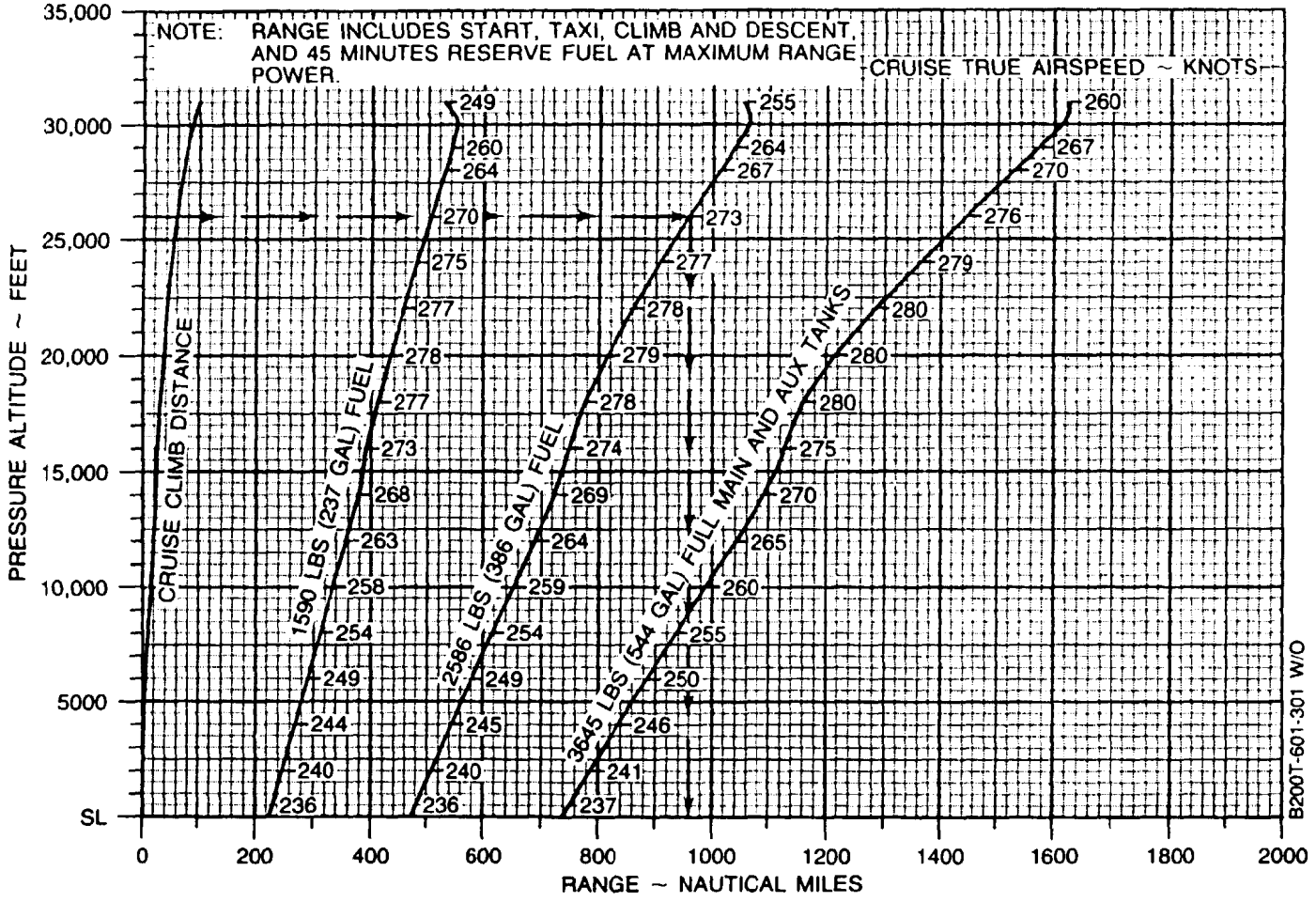

Figure 7-54. Range Profile - Maximum Cruise Power, 1700 RPM

NORMAL CRUISE POWER

1800 RPM

ISA - 30°C

NOTE: IOAT, TORQUE, AND FUEL FLOW BASED ON 12,000 POUNDS.

PRESS. ALT	IOAT	OAT	TORQUE PER ENG	FUEL FLOW PER ENG	TOTAL FUEL FLOW	AIRSPEED ~ KNOTS							
						13,000 LBS		12,000 LBS		11,000 LBS		10,000 LBS	
FEET	°C	°C	PERCENT	LBS/HR	LBS/HR	IAS	TAS	IAS	TAS	IAS	TAS	IAS	TAS
SL	-10	-15	98	481	962	244	232	244	232	244	232	244	232
2000	-14	-19	100	473	946	243	237	244	238	244	238	244	238
4000	-18	-23	100	460	920	241	242	241	243	242	243	243	244
6000	-21	-27	100	448	896	238	246	239	247	240	248	241	249
8000	-25	-31	100	437	874	236	251	237	252	238	253	239	254
10,000	-29	-35	100	427	854	233	255	235	257	236	258	236	259
12,000	-32	-39	100	417	834	231	260	232	262	233	263	234	264
14,000	-36	-43	100	410	820	229	266	230	267	231	268	232	269
16,000	-40	-47	100	404	808	226	271	228	272	229	273	230	275
18,000	-44	-51	100	399	798	224	276	225	278	226	279	228	280
20,000	---	---	---	---	---	---	---	---	---	---	---	---	---
22,000	---	---	---	---	---	---	---	---	---	---	---	---	---
24,000	---	---	---	---	---	---	---	---	---	---	---	---	---
26,000	---	---	---	---	---	---	---	---	---	---	---	---	---
28,000	---	---	---	---	---	---	---	---	---	---	---	---	---
29,000	---	---	---	---	---	---	---	---	---	---	---	---	---
31,000	---	---	---	---	---	---	---	---	---	---	---	---	---
33,000	---	---	---	---	---	---	---	---	---	---	---	---	---
35,000	---	---	---	---	---	---	---	---	---	---	---	---	---

BT05727

Figure 7-55. Normal Cruise Power, 1800 RPM, ISA -30°C

NORMAL CRUISE POWER

1800 RPM

ISA - 20°C

NOTE: IOAT. TORQUE, AND FUEL FLOW BASED ON 12,000 POUNDS.

PRESS. ALT	IOAT	OAT	TORQUE PER ENG	FUEL FLOW PER ENG	TOTAL FUEL FLOW	AIRSPEED ~ KNOTS							
						13,000 LBS		12,000 LBS		11,000 LBS		10,000 LBS	
FEET	°C	°C	PERCENT	LBS/HR	LBS/HR	IAS	TAS	IAS	TAS	IAS	TAS	IAS	TAS
SL	0	-5	100	486	972	243	236	244	236	244	236	244	236
2000	-4	-9	100	474	948	241	240	242	241	243	242	244	243
4000	-7	-13	100	461	922	239	245	240	246	241	246	241	247
6000	-11	-17	100	449	898	236	249	237	250	238	251	239	252
8000	-15	-21	100	438	876	234	254	235	255	236	256	237	257
10,000	-19	-25	100	428	856	232	259	233	260	234	261	235	262
12,000	-22	-29	100	417	834	229	264	230	265	231	266	232	267
14,000	-26	-33	100	411	822	227	269	228	270	230	272	230	273
16,000	-30	-37	100	405	810	224	274	226	276	227	277	228	278
18,000	-33	-41	100	400	800	222	280	223	281	225	283	226	284
20,000	-37	-45	96	382	764	216	281	217	283	219	285	220	286
22,000	-41	-49	92	363	726	209	281	211	283	213	285	214	287
24,000	-45	-53	86	340	680	201	279	203	282	205	285	207	287
26,000	- - -	- - -	- - -	- - -	- - -	- - -	- - -	- - -	- - -	- - -	- - -	- - -	- - -
28,000	- - -	- - -	- - -	- - -	- - -	- - -	- - -	- - -	- - -	- - -	- - -	- - -	- - -
29,000	- - -	- - -	- - -	- - -	- - -	- - -	- - -	- - -	- - -	- - -	- - -	- - -	- - -
31,000	- - -	- - -	- - -	- - -	- - -	- - -	- - -	- - -	- - -	- - -	- - -	- - -	- - -
33,000	- - -	- - -	- - -	- - -	- - -	- - -	- - -	- - -	- - -	- - -	- - -	- - -	- - -
35,000	- - -	- - -	- - -	- - -	- - -	- - -	- - -	- - -	- - -	- - -	- - -	- - -	- - -

BT05728

Figure 7-56. Normal Cruise Power, 1800 RPM, ISA -20°C

NORMAL CRUISE POWER

1800 RPM

ISA -10°C

NOTE: IOAT, TORQUE, AND FUEL FLOW BASED ON 12,000 POUNDS.

PRESS. ALT	IOAT	OAT	TORQUE PER ENG	FUEL FLOW PER ENG	TOTAL FUEL FLOW	AIRSPEED ~ KNOTS							
						13,000 LBS		12,000 LBS		11,000 LBS		10,000 LBS	
FEET	°C	°C	PERCENT	LBS/HR	LBS/HR	IAS	TAS	IAS	TAS	IAS	TAS	IAS	TAS
SL	10	5	100	489	978	242	238	243	239	243	240	244	241
2000	7	1	100	475	950	239	243	240	244	241	245	242	246
4000	3	-3	100	463	926	237	247	238	248	239	249	240	250
6000	-1	-7	100	450	900	234	252	236	253	237	254	237	255
8000	-5	-11	100	439	878	232	257	233	258	234	259	235	260
10,000	-8	-15	100	428	856	230	262	231	263	232	264	233	265
12,000	-12	-19	100	419	838	227	267	229	268	230	270	231	271
14,000	-16	-23	100	412	824	225	272	226	274	227	275	228	276
16,000	-19	-27	100	406	812	222	278	224	279	225	281	226	282
18,000	-23	-31	96	388	776	216	279	218	281	219	283	221	284
20,000	-27	-35	92	367	734	210	279	211	281	213	283	214	285
22,000	-31	-39	87	349	698	203	278	205	282	207	284	208	286
24,000	-35	-43	82	327	654	195	277	197	281	200	283	201	286
26,000	-39	-47	76	304	608	186	274	189	278	191	281	194	284
28,000	-44	-51	70	280	560	176	269	180	274	183	278	185	282
29,000	-46	-52	67	268	536	171	265	175	271	178	276	181	280
31,000	- - -	- - -	- - -	- - -	- - -	- - -	- - -	- - -	- - -	- - -	- - -	- - -	- - -
33,000	- - -	- - -	- - -	- - -	- - -	- - -	- - -	- - -	- - -	- - -	- - -	- - -	- - -
35,000	- - -	- - -	- - -	- - -	- - -	- - -	- - -	- - -	- - -	- - -	- - -	- - -	- - -

BT05729

Figure 7-57. Normal Cruise Power, 1800 RPM, ISA -10°C

NORMAL CRUISE POWER

1800 RPM

ISA

NOTE: IOAT, TORQUE, AND FUEL FLOW BASED ON 12,000 POUNDS.

PRESS. ALT	IOAT	OAT	TORQUE PER ENG	FUEL FLOW PER ENG	TOTAL FUEL FLOW	AIRSPEED ~ KNOTS							
						13,000 LBS		12,000 LBS		11,000 LBS		10,000 LBS	
FEET	°C	°C	PERCENT	LBS/HR	LBS/HR	IAS	TAS	IAS	TAS	IAS	TAS	IAS	TAS
SL	20	15	100	492	984	240	241	241	242	242	243	243	244
2000	17	11	100	478	956	238	246	239	247	240	248	240	248
4000	13	7	100	464	928	235	250	236	251	237	252	238	253
6000	9	3	100	451	902	233	255	234	256	235	257	236	258
8000	5	-1	100	440	880	230	260	232	261	233	262	234	263
10,000	2	-5	100	429	858	228	265	229	266	230	267	231	269
12,000	-2	-9	100	419	838	226	270	227	272	228	273	229	274
14,000	-6	-13	100	411	822	223	275	224	277	226	278	227	280
16,000	-9	-17	97	396	792	218	278	219	279	221	281	222	283
18,000	-13	-21	91	372	744	210	276	212	279	213	281	215	282
20,000	-17	-25	87	354	708	204	277	206	279	207	282	209	284
22,000	-21	-29	83	336	672	197	277	199	280	201	283	203	285
24,000	-25	-33	78	315	630	189	275	192	278	194	282	196	284
26,000	-29	-37	73	291	582	180	271	183	275	186	279	188	282
28,000	-34	-41	67	268	536	170	265	174	271	177	275	180	279
29,000	-36	-42	64	257	514	164	260	168	267	172	273	175	277
31,000	-40	-46	59	237	474	151	248	158	260	163	268	166	273
33,000	-45	-50	53	217	434	131	225	145	248	152	260	157	268
35,000	- - -	- - -	- - -	- - -	- - -	- - -	- - -	- - -	- - -	- - -	- - -	- - -	- - -

BT05730

Figure 7-58. Normal Cruise Power, 1800 RPM, ISA

NORMAL CRUISE POWER

1800 RPM

ISA + 10°C

NOTE: IOAT, TORQUE, AND FUEL FLOW BASED ON 12,000 POUNDS.

PRESS. ALT	IOAT	OAT	TORQUE PER ENG	FUEL FLOW PER ENG	TOTAL FUEL FLOW	AIRSPEED ~ KNOTS							
						13,000 LBS		12,000 LBS		11,000 LBS		10,000 LBS	
FEET	°C	°C	PERCENT	LBS/HR	LBS/HR	IAS	TAS	IAS	TAS	IAS	TAS	IAS	TAS
SL	31	25	100	495	990	238	244	239	245	240	246	241	246
2000	27	21	100	481	962	236	248	237	249	238	250	239	251
4000	23	17	100	468	936	234	253	235	254	236	255	237	256
6000	19	13	100	455	910	231	258	232	259	233	260	234	261
8000	16	9	100	443	886	229	263	230	264	231	265	232	266
10,000	12	5	100	431	862	226	268	228	269	229	270	230	272
12,000	8	1	100	420	840	224	273	225	275	226	276	227	277
14,000	4	-3	97	401	802	218	275	220	277	221	278	222	280
16,000	0	-7	92	378	756	212	275	213	277	215	279	216	281
18,000	-4	-11	88	357	714	205	275	207	277	208	280	210	281
20,000	-7	-15	84	341	682	199	275	201	278	203	281	204	283
22,000	-11	-19	80	324	648	191	275	194	278	196	281	198	283
24,000	-15	-23	75	303	606	183	272	186	276	188	279	191	282
26,000	-20	-27	69	280	560	174	267	177	272	180	277	183	280
28,000	-24	-31	63	257	514	163	260	167	267	171	272	174	277
29,000	-26	-32	61	247	494	149	247	162	263	166	270	170	275
31,000	-31	-36	55	227	454	133	229	150	253	156	263	161	270
33,000	-36	-40	50	207	414	---	---	135	237	145	254	151	264
35,000	-40	-44	46	190	380	---	---	---	---	130	237	140	254

BT05731

Figure 7-59. Normal Cruise Power, 1800 RPM, ISA +10°C

NORMAL CRUISE POWER

1800 RPM

ISA + 20°C

NOTE: IOAT, TORQUE, AND FUEL FLOW BASED ON 12,000 POUNDS.

PRESS. ALT	IOAT	OAT	TORQUE PER ENG	FUEL FLOW PER ENG	TOTAL FUEL FLOW	AIRSPEED ~ KNOTS							
						13,000 LBS		12,000 LBS		11,000 LBS		10,000 LBS	
FEET	°C	°C	PERCENT	LBS/HR	LBS/HR	IAS	TAS	IAS	TAS	IAS	TAS	IAS	TAS
SL	41	35	100	497	994	237	246	238	247	239	248	240	249
2000	37	31	100	484	968	235	251	236	252	237	253	237	254
4000	33	27	100	470	940	232	255	233	257	234	258	235	259
6000	29	23	100	457	914	230	261	231	262	232	263	233	264
8000	26	19	100	445	890	227	266	228	267	230	268	230	269
10,000	22	15	99	431	862	224	270	225	271	227	273	228	274
12,000	18	11	94	403	806	217	270	219	271	220	273	221	275
14,000	14	7	90	381	762	211	270	213	273	214	274	215	276
16,000	10	3	86	361	722	205	271	207	273	208	276	210	277
18,000	6	-1	83	341	682	198	271	200	274	202	276	204	279
20,000	2	-5	80	328	656	193	273	195	276	197	279	199	281
22,000	-1	-9	77	313	626	187	273	189	277	191	280	193	283
24,000	-6	-13	72	292	584	178	270	181	274	184	278	186	282
26,000	-10	-17	66	269	538	168	264	172	270	175	274	178	279
28,000	-14	-21	60	247	494	155	253	161	263	165	269	169	274
29,000	-17	-22	57	236	472	147	245	155	257	160	266	164	272
31,000	-21	-26	52	217	434	- - -	- - -	142	245	150	258	155	266
33,000	-25	-30	46	190	380	- - -	- - -	- - -	- - -	137	245	145	259
35,000	-29	-34	44	184	368	- - -	- - -	- - -	- - -	- - -	- - -	132	246

BTC5732

Figure 7-60. Normal Cruise Power, 1800 RPM, ISA +20°C

NORMAL CRUISE POWER

1800 RPM

ISA + 30°C

NOTE: IOAT, TORQUE, AND FUEL FLOW BASED ON 12,000 POUNDS.

PRESS. ALT	IOAT	OAT	TORQUE PER ENG	FUEL FLOW PER ENG	TOTAL FUEL FLOW	AIRSPEED ~ KNOTS							
						13,000 LBS		12,000 LBS		11,000 LBS		10,000 LBS	
FEET	°C	°C	PERCENT	LBS/HR	LBS/HR	IAS	TAS	IAS	TAS	IAS	TAS	IAS	TAS
SL	51	45	100	500	1000	235	249	237	250	237	251	238	251
2000	47	41	100	486	972	233	253	234	254	235	255	236	256
4000	43	37	100	472	944	231	258	232	259	233	261	234	262
6000	40	33	100	458	916	228	263	229	264	230	265	231	267
8000	36	29	96	434	868	222	264	224	266	225	267	226	268
10,000	32	25	92	409	818	216	265	218	267	219	269	220	270
12,000	28	21	88	383	766	209	265	211	267	213	269	214	271
14,000	24	17	84	362	724	203	265	205	268	207	270	208	272
16,000	20	13	81	343	686	197	266	199	269	201	271	203	273
18,000	16	9	77	326	652	191	267	194	270	196	273	197	275
20,000	12	5	75	313	626	186	269	189	272	191	275	193	278
22,000	8	1	73	301	602	181	270	184	274	186	277	188	281
24,000	4	-3	68	280	560	172	266	175	271	178	275	181	279
26,000	0	-7	63	258	516	161	259	166	266	170	272	173	276
28,000	-4	-11	58	237	474	148	247	156	259	160	266	164	272
29,000	-7	-12	55	227	454	140	237	149	252	155	263	159	270
31,000	-12	-16	50	207	414	- - -	- - -	134	236	144	253	150	263
33,000	-16	-20	45	192	384	- - -	- - -	- - -	- - -	128	235	139	253
35,000	-20	-24	41	176	352	- - -	- - -	- - -	- - -	- - -	- - -	123	234

BT05733

Figure 7-61. Normal Cruise Power, 1800 RPM, ISA +30°C

NORMAL CRUISE POWER

1800 RPM

ISA + 37°C

NOTE: IOAT, TORQUE, AND FUEL FLOW BASED ON 12,000 POUNDS.

PRESS. ALT	IOAT	OAT	TORQUE PER ENG	FUEL FLOW PER ENG	TOTAL FUEL FLOW	AIRSPEED ~ KNOTS							
						13,000 LBS		12,000 LBS		11,000 LBS		10,000 LBS	
FEET	°C	°C	PERCENT	LBS/HR	LBS/HR	IAS	TAS	IAS	TAS	IAS	TAS	IAS	TAS
SL	58	52	100	501	1002	234	250	236	251	236	252	237	253
2000	54	48	99	484	968	231	254	232	255	233	256	236	257
4000	50	44	97	465	930	227	257	228	258	229	260	231	261
6000	46	40	94	443	886	222	259	224	261	225	262	226	263
8000	43	36	91	419	838	217	260	218	262	220	264	221	265
10,000	39	32	88	396	792	211	262	213	264	214	266	215	267
12,000	35	28	83	369	738	204	261	206	264	208	266	209	268
14,000	31	24	80	350	700	198	262	200	265	202	267	203	269
16,000	27	20	77	332	664	192	262	194	265	196	268	198	270
18,000	23	16	74	315	630	186	263	189	266	191	269	193	272
20,000	19	12	72	303	606	181	265	184	269	186	272	188	275
22,000	15	8	70	292	584	176	266	179	271	182	274	184	278
24,000	11	4	65	272	544	167	262	171	268	174	273	177	277
26,000	7	0	61	251	502	156	254	162	263	166	269	169	274
28,000	3	-4	55	230	460	142	240	151	254	156	263	160	270
29,000	1	-5	53	220	440	130	223	143	247	151	259	156	267
31,000	-5	-9	47	200	400	---	---	125	223	139	247	146	260
33,000	-9	-13	44	185	370	---	---	---	---	121	225	134	249
35,000	---	---	---	---	---	---	---	---	---	---	---	---	---

BT05734

Figure 7-62. Normal Cruise Power, 1800 RPM, ISA +37°C

NORMAL CRUISE SPEEDS

1800 RPM

WEIGHT 12,000 LBS

NOTE: DURING OPERATION WITH ICE VANES EXTENDED, TRUE AIRSPEED WILL BE REDUCED APPROXIMATELY 30 KNOTS IF ORIGINAL POWER IS NOT OR CANNOT BE RESET, BUT WILL BE UNCHANGED IF THE ORIGINAL POWER IS RESET.

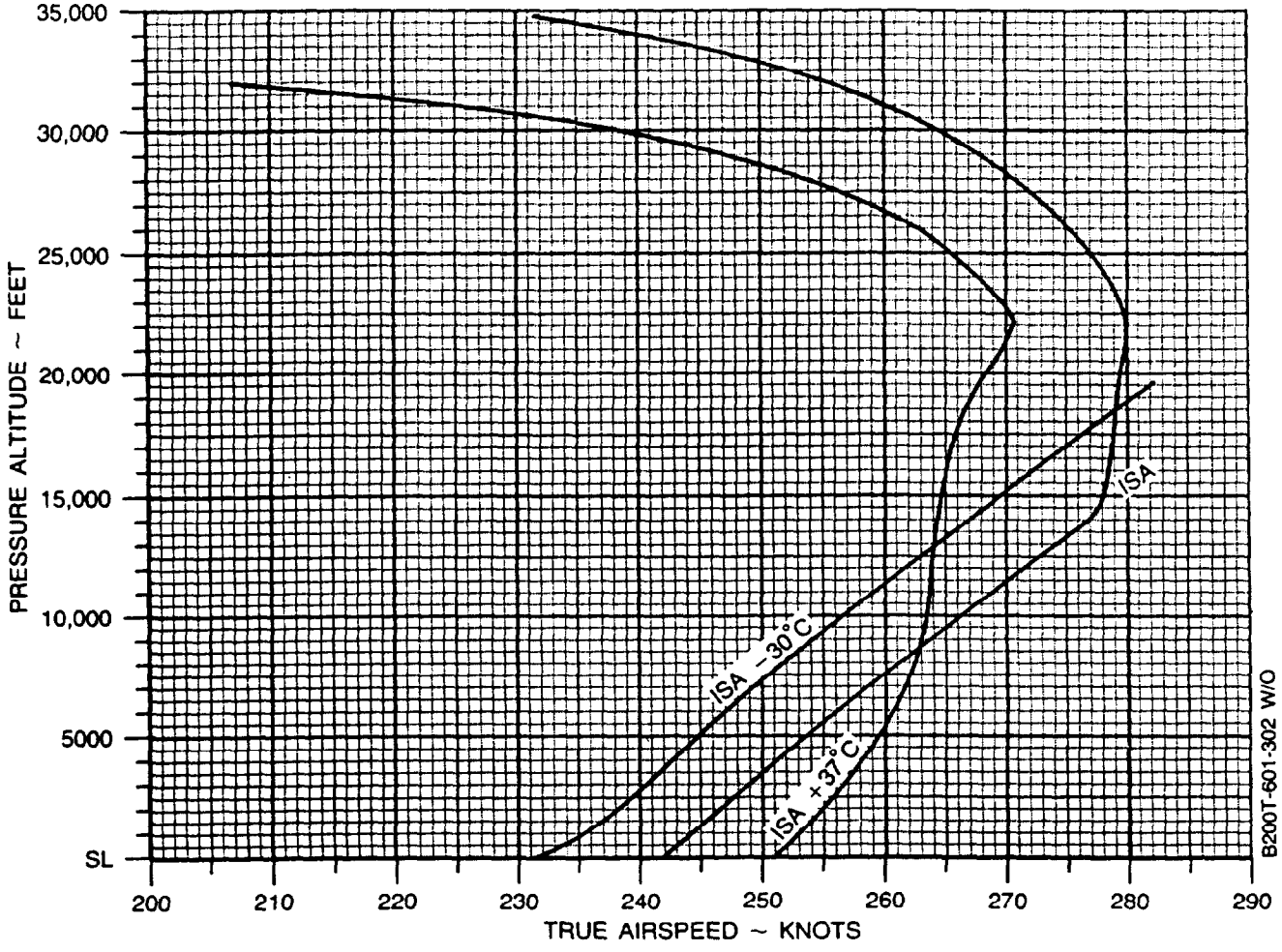

Figure 7-63. Normal Cruise Speeds, 1800 RPM

NORMAL CRUISE POWER

1800 RPM

NOTES: **1.** DURING OPERATION WITH ICE VANES EXTENDED, TORQUE WILL DECREASE APPROXIMATELY 20% IF DESIRED. ORIGINAL POWER MAY BE RESET. PROVIDED ITT LIMIT IS NOT EXCEEDED.

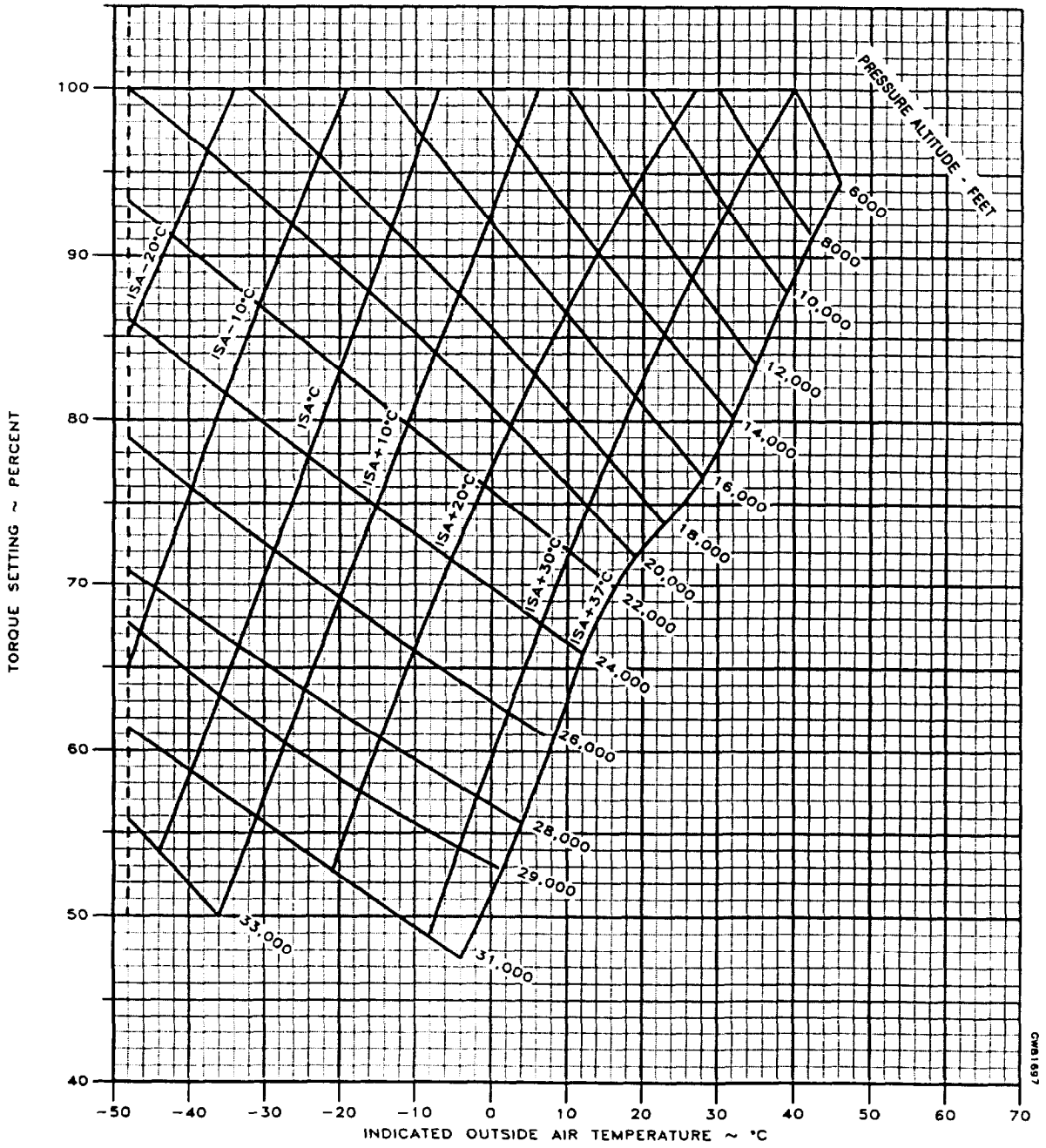

Figure 7-64. Normal Cruise Power, 1800 RPM

FUEL FLOW AT NORMAL CRUISE POWER

1800 RPM

NOTE: DURING OPERATION WITH ICE VANES EXTENDED. FUEL FLOW WILL DE CREASE APPROXIMATELY 10% IF ORIGINAL POWER IS NOT OR CANNOT BI RESET. IF ORIGINAL POWER IS RESET, FUEL FLOW WILL INCREASE APPROX IMATELY 30 LBS/HR/ENG

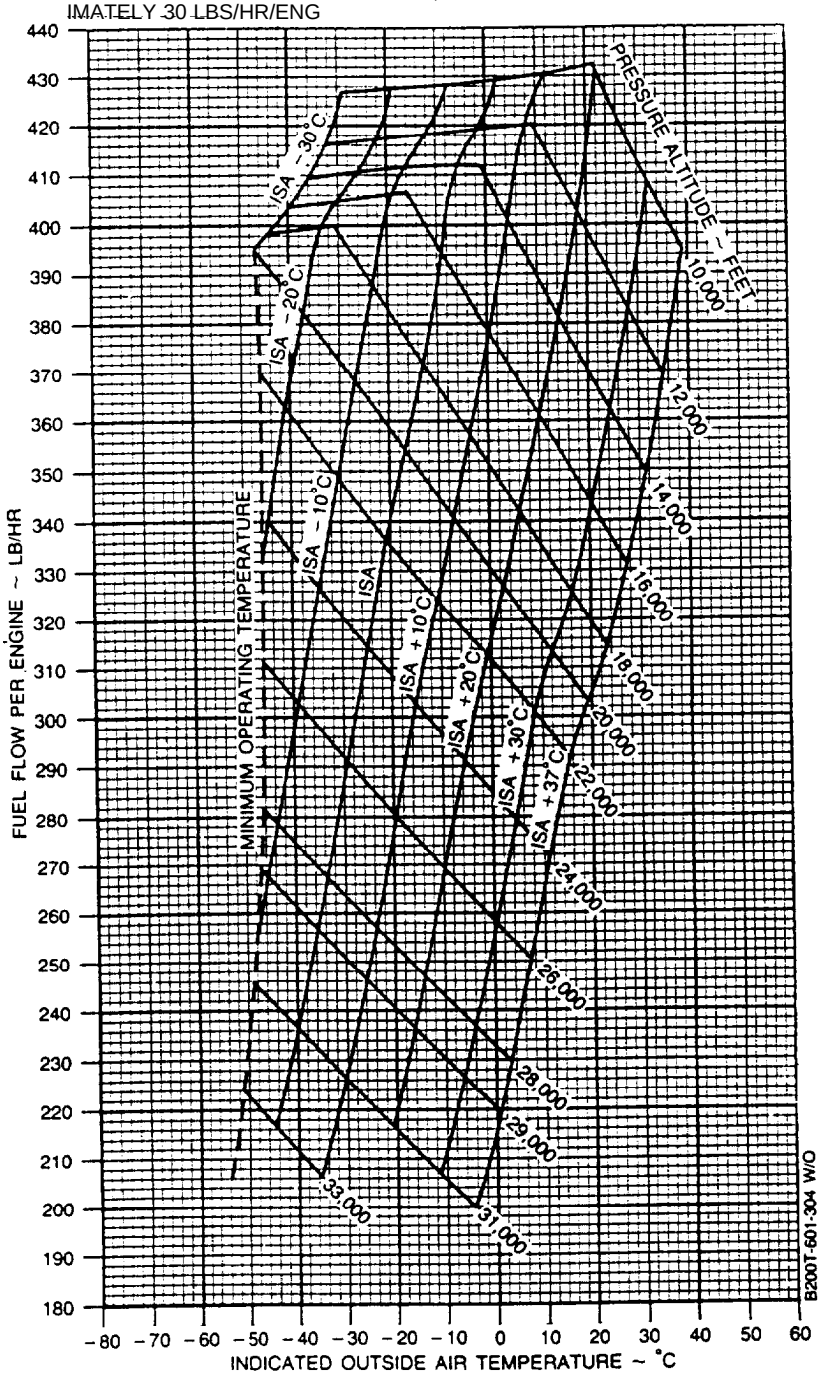

Figure 7-65. Fuel Flow At Normal Cruise Power, 1800 RPM

RANGE PROFILE - NORMAL CRUISE POWER

1800 RPM

ASSOCIATED CONDITIONS:

WEIGHT	14,090 LBS BEFORE ENGINE START
FUEL	AVIATION KEROSENE
FUEL DENSITY	6.7 LBS/GAL
ICE VANES	RETRACTED

STANDARD DAY (ISA)
ZERO WIND

EXAMPLE:

PRESSURE ALTITUDE	26,000 FT
FUEL USED	2586 LBS
RANGE	988 NM

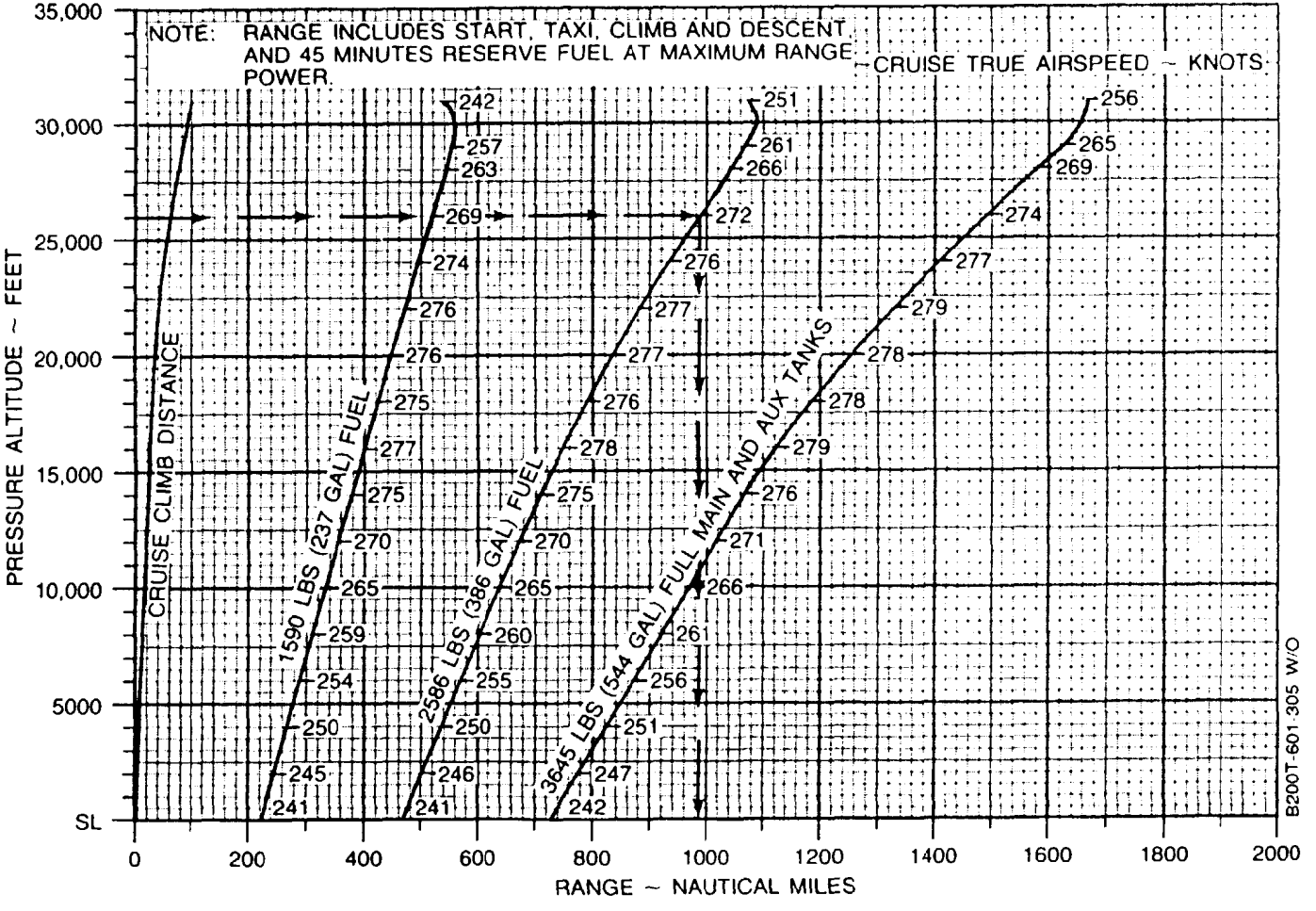

Figure 7-66. Range Profile - Normal Cruise Power, 1800 RPM

MAXIMUM CRUISE POWER

1800 RPM

ISA - 30°C

NOTE: IOAT, TORQUE, AND FUEL FLOW BASED ON 12,000 POUNDS.

PRESS. ALT	IOAT	OAT	TORQUE PER ENG	FUEL FLOW PER ENG	TOTAL FUEL FLOW	AIRSPEED ~ KNOTS							
						13,000 LBS		12,000 LBS		11,000 LBS		10,000 LBS	
FEET	°C	°C	PERCENT	LBS/HR	LBS/HR	IAS	TAS	IAS	TAS	IAS	TAS	IAS	TAS
SL	-10	-15	98	481	962	244	232	244	232	244	232	244	232
2000	-14	-19	100	473	946	243	237	244	238	244	238	244	238
4000	-18	-23	100	460	920	241	242	241	243	242	243	243	244
6000	-21	-27	100	448	896	238	246	239	247	240	248	241	249
8000	-25	-31	100	437	874	236	251	237	238	238	253	239	254
10,000	-29	-35	100	427	854	233	255	235	257	236	258	236	259
12,000	-32	-39	100	417	834	231	260	232	262	233	263	234	264
14,000	-36	-43	100	410	820	229	265	230	267	231	268	232	269
16,000	-40	-47	100	404	808	226	271	228	272	229	273	230	275
18,000	-44	-51	100	399	798	224	276	225	278	226	279	228	280
20,000	- - -	- - -	- - -	- - -	- - -	- - -	- - -	- - -	- - -	- - -	- - -	- - -	- - -
22,000	- - -	- - -	- - -	- - -	- - -	- - -	- - -	- - -	- - -	- - -	- - -	- - -	- - -
24,000	- - -	- - -	- - -	- - -	- - -	- - -	- - -	- - -	- - -	- - -	- - -	- - -	- - -
26,000	- - -	- - -	- - -	- - -	- - -	- - -	- - -	- - -	- - -	- - -	- - -	- - -	- - -
28,000	- - -	- - -	- - -	- - -	- - -	- - -	- - -	- - -	- - -	- - -	- - -	- - -	- - -
29,000	- - -	- - -	- - -	- - -	- - -	- - -	- - -	- - -	- - -	- - -	- - -	- - -	- - -
31,000	- - -	- - -	- - -	- - -	- - -	- - -	- - -	- - -	- - -	- - -	- - -	- - -	- - -
33,000	- - -	- - -	- - -	- - -	- - -	- - -	- - -	- - -	- - -	- - -	- - -	- - -	- - -
35,000	- - -	- - -	- - -	- - -	- - -	- - -	- - -	- - -	- - -	- - -	- - -	- - -	- - -

BT05735

Figure 7-67. Maximum Cruise Power, 1800 RPM, ISA -30°C

MAXIMUM CRUISE POWER

1800 RPM

ISA - 20°C

NOTE: IOAT, TORQUE, AND FUEL FLOW BASED ON 12,000 POUNDS.

PRESS. ALT	IOAT	OAT	TORQUE PER ENG	FUEL FLOW PER ENG	TOTAL FUEL FLOW	AIRSPEED ~ KNOTS							
						13,000 LBS		12,000 LBS		11,000 LBS		10,000 LBS	
FEET	°C	°C	PERCENT	LBS/HR	LBS/HR	IAS	TAS	IAS	TAS	IAS	TAS	IAS	TAS
SL	0	-5	100	486	972	243	236	244	236	244	236	244	236
2000	-4	-9	100	474	948	241	240	242	241	243	242	244	243
4000	-7	-13	100	461	922	239	245	240	246	241	246	241	247
6000	-11	-17	100	449	898	236	249	237	250	238	251	239	252
8000	-15	-21	100	438	876	234	254	235	255	236	256	237	257
10,000	-19	-25	100	428	856	232	259	233	260	234	261	235	262
12,000	-22	-29	100	417	834	229	264	230	265	231	266	232	267
14,000	-26	-33	100	411	822	227	269	228	270	229	272	230	273
16,000	-30	-37	100	405	810	224	274	226	276	227	277	228	278
18,000	-33	-41	100	400	800	222	280	223	281	225	283	226	284
20,000	-37	-45	100	396	792	220	285	221	287	222	289	223	290
22,000	-41	-49	96	378	756	213	286	214	288	216	290	217	292
24,000	-45	-53	90	352	704	204	284	206	286	208	289	210	291
26,000	- - -	- - -	- - -	- - -	- - -	- - -	- - -	- - -	- - -	- - -	- - -	- - -	- - -
28,000	- - -	- - -	- - -	- - -	- - -	- - -	- - -	- - -	- - -	- - -	- - -	- - -	- - -
29,000	- - -	- - -	- - -	- - -	- - -	- - -	- - -	- - -	- - -	- - -	- - -	- - -	- - -
31,000	- - -	- - -	- - -	- - -	- - -	- - -	- - -	- - -	- - -	- - -	- - -	- - -	- - -
33,000	- - -	- - -	- - -	- - -	- - -	- - -	- - -	- - -	- - -	- - -	- - -	- - -	- - -
35,000	- - -	- - -	- - -	- - -	- - -	- - -	- - -	- - -	- - -	- - -	- - -	- - -	- - -

BT05736

Figure 7-68. Maximum Cruise Power, 1800 RPM, ISA -20°C

MAXIMUM CRUISE POWER

1800 RPM

ISA - 10°C

NOTE: IOAT, TORQUE, AND FUEL FLOW BASED ON 12,000 POUNDS.

PRESS. ALT	IOAT	OAT	TORQUE PER ENG	FUEL FLOW PER ENG	TOTAL FUEL FLOW	AIRSPEED ~ KNOTS							
						13,000 LBS		12,000 LBS		11,000 LBS		10,000 LBS	
FEET	°C	°C	PERCENT	LBS/HR	LBS/HR	IAS	TAS	IAS	TAS	IAS	TAS	IAS	TAS
SL	10	5	100	489	978	242	238	243	239	243	240	244	241
2000	7	1	100	475	950	239	243	240	244	241	245	242	246
4000	3	-3	100	463	926	237	247	238	248	239	249	240	250
6000	-1	-7	100	450	900	234	252	236	253	237	254	237	255
8000	-5	-11	100	439	878	232	257	233	258	234	259	235	260
10,000	-8	-15	100	428	856	230	262	231	263	232	264	233	265
12,000	-12	-19	100	419	838	227	267	229	268	230	270	231	271
14,000	-16	-23	100	412	824	225	272	226	274	227	275	228	276
16,000	-19	-27	100	406	812	222	278	224	279	225	281	226	282
18,000	-23	-31	100	401	802	220	283	221	285	223	287	223	288
20,000	-27	-35	96	382	764	213	284	215	286	217	288	218	289
22,000	-31	-39	91	363	726	206	284	208	286	210	288	212	290
24,000	-35	-43	86	341	682	199	282	201	285	203	288	204	290
26,000	-39	-47	80	316	632	190	279	192	283	195	286	197	288
28,000	-43	-51	73	291	582	181	274	183	279	186	283	188	286
29,000	-46	-52	70	278	556	175	271	178	276	181	280	184	284
31,000	- - -	- - -	- - -	- - -	- - -	- - -	- - -	- - -	- - -	- - -	- - -	- - -	- - -
33,000	- - -	- - -	- - -	- - -	- - -	- - -	- - -	- - -	- - -	- - -	- - -	- - -	- - -
35,000	- - -	- - -	- - -	- - -	- - -	- - -	- - -	- - -	- - -	- - -	- - -	- - -	- - -

BT05737

Figure 7-69. Maxinum Cruise Power, 1800 RPM, ISA -10°C

MAXIMUM CRUISE POWER

1800 RPM

ISA

NOTE: IOAT, TORQUE, AND FUEL FLOW BASED ON 12,000 POUNDS.

PRESS. ALT	IOAT	OAT	TORQUE PER ENG	FUEL FLOW PER ENG	TOTAL FUEL FLOW	AIRSPEED ~ KNOTS							
						13,000 LBS		12,000 LBS		11,000 LBS		10,000 LBS	
FEET	°C	°C	PERCENT	LBS/HR	LBS/HR	IAS	TAS	IAS	TAS	IAS	TAS	IAS	TAS
SL	20	15	100	492	984	240	241	241	242	242	243	243	244
2000	17	11	100	478	956	238	246	239	247	240	248	240	248
4000	13	7	100	464	928	235	250	236	251	237	252	238	253
6000	9	3	100	451	902	233	255	234	256	235	257	236	258
8000	5	-1	100	440	880	230	260	232	261	233	262	234	263
10,000	2	-5	100	429	858	228	265	229	266	230	267	231	269
12,000	-2	-9	100	419	838	226	270	227	272	228	273	229	274
14,000	-6	-13	100	411	822	223	275	224	277	226	278	227	280
16,000	-9	-17	100	406	812	221	281	222	283	223	284	224	285
18,000	-13	-21	95	385	772	213	281	216	283	217	285	218	287
20,000	-17	-25	91	367	734	207	282	209	284	211	286	212	288
22,000	-21	-29	87	349	698	201	282	203	284	204	287	206	289
24,000	-25	-33	82	327	654	192	280	195	283	197	286	199	288
26,000	-29	-37	76	303	606	184	276	186	280	189	284	191	287
28,000	-33	-41	70	280	560	174	271	177	276	180	281	183	284
29,000	-36	-42	67	269	538	169	268	172	273	176	278	178	283
31,000	-40	-46	62	248	496	157	258	162	267	167	274	170	279
33,000	-45	-50	56	227	454	140	240	150	257	157	267	161	274
35,000	- - -	- - -	- - -	- - -	- - -	- - -	- - -	- - -	- - -	- - -	- - -	- - -	- - -

BT05738

Figure 7-70. Maximum Cruise Power, 1800 RPM, ISA

MAXIMUM CRUISE POWER

1800 RPM

ISA + 10°C

NOTE: IOAT, TORQUE, AND FUEL FLOW BASED ON 12,000 POUNDS.

PRESS. ALT	IOAT	OAT	TORQUE PER ENG	FUEL FLOW PER ENG	TOTAL FUEL FLOW	AIRSPEED ~ KNOTS							
						13,000 LBS		12,000 LBS		11,000 LBS		10,000 LBS	
FEET	°C	°C	PERCENT	LBS/HR	LBS/HR	IAS	TAS	IAS	TAS	IAS	TAS	IAS	TAS
SL	31	25	100	495	990	238	244	239	245	240	246	241	246
2000	27	21	100	481	962	236	248	237	249	238	250	239	251
4000	23	17	100	468	936	234	253	235	254	236	255	237	256
6000	19	13	100	455	910	231	258	232	259	233	260	234	261
8000	16	9	100	443	886	229	263	230	264	231	265	232	266
10,000	12	5	100	431	862	226	268	228	269	229	270	230	272
12,000	8	1	100	420	840	224	273	225	275	226	276	227	277
14,000	5	-3	100	412	824	221	278	223	280	224	282	225	283
16,000	1	-7	96	391	782	215	279	216	281	218	283	219	284
18,000	-3	-11	91	371	742	208	279	210	282	212	284	213	286
20,000	-7	-15	88	354	708	202	280	204	283	206	285	207	287
22,000	-11	-19	83	336	672	195	279	197	282	199	285	201	288
24,000	-15	-23	77	314	628	187	277	189	281	192	284	194	287
26,000	-19	-27	72	291	582	177	273	181	277	183	281	186	285
28,000	-24	-31	67	268	536	167	267	171	273	175	278	177	282
29,000	-26	-32	64	258	516	161	262	166	270	170	275	173	280
31,000	-30	-36	58	237	474	148	250	156	262	161	270	164	276
33,000	-35	-40	53	218	436	- - -	- - -	143	250	150	263	155	271
35,000	-39	-44	49	201	402	- - -	- - -	- - -	- - -	137	249	145	263

BT05739

Figure 7-71. Maximum Cruise Power, 1800 RPM, ISA +1O°C

MAXIMUM CRUISE POWER

1800 RPM

ISA + 20°C

NOTE: IOAT, TORQUE, AND FUEL FLOW BASED ON 12,000 POUNDS.

PRESS. ALT	IOAT	OAT	TORQUE PER ENG	FUEL FLOW PER ENG	TOTAL FUEL FLOW	AIRSPEED ~ KNOTS							
						13,000 LBS		12,000 LBS		11,000 LBS		10,000 LBS	
FEET	°C	°C	PERCENT	LBS/HR	LBS/HR	IAS	TAS	IAS	TAS	IAS	TAS	IAS	TAS
SL	41	35	100	497	994	237	246	238	247	239	248	240	249
2000	37	31	100	484	968	235	251	236	252	237	253	237	254
4000	33	27	100	470	940	232	255	233	257	234	258	235	259
6000	29	23	100	457	914	230	261	231	262	232	263	233	264
8000	26	19	100	445	890	227	266	228	267	230	268	230	269
10,000	22	15	100	434	868	225	271	226	272	227	273	228	275
12,000	18	11	96	410	820	219	272	220	274	222	275	223	277
14,000	14	7	93	390	780	213	274	215	276	216	277	218	279
16,000	10	3	90	372	744	208	275	210	277	211	279	213	281
18,000	7	-1	86	355	710	202	276	204	279	206	281	207	283
20,000	3	-5	83	339	678	196	277	198	280	200	283	202	285
22,000	-1	-9	80	324	648	190	278	192	281	194	284	196	287
24,000	-5	-13	75	303	606	181	275	184	279	187	283	189	286
26,000	-9	-17	69	280	560	172	270	175	275	178	279	181	283
28,000	-14	-21	63	258	516	161	262	165	269	169	275	172	279
29,000	-16	-22	60	247	494	154	255	160	265	164	272	168	277
31,000	-21	-26	55	227	454	137	237	148	255	154	266	159	273
33,000	-26	-30	50	208	416	- - -	- - -	132	237	143	256	150	267
35,000	-30	-34	46	191	382	- - -	- - -	- - -	- - -	127	236	138	256

BT05740

Figure 7-72. Maximum Cruise Power, 1800 RPM, ISA +20°C

MAXIMUM CRUISE POWER

1800 RPM

ISA + 30°C

NOTE: IOAT, TORQUE, AND FUEL FLOW BASED ON 12,000 POUNDS.

PRESS. ALT	IOAT	OAT	TORQUE PER ENG	FUEL FLOW PER ENG	TOTAL FUEL FLOW	AIRSPEED ~ KNOTS							
						13,000 LBS		12,000 LBS		11,000 LBS		10,000 LBS	
FEET	°C	°C	PERCENT	LBS/HR	LBS/HR	IAS	TAS	IAS	TAS	IAS	TAS	IAS	TAS
SL	51	45	100	500	1000	235	248	236	250	237	251	238	251
2000	47	41	100	486	972	233	253	234	254	235	255	236	256
4000	43	37	100	472	944	231	258	232	259	233	261	234	262
6000	40	33	100	459	918	228	263	229	264	230	266	231	267
8000	36	29	98	439	878	224	266	225	267	226	269	227	270
10,000	32	25	94	415	830	218	267	219	269	221	270	222	272
12,000	28	21	89	387	774	211	267	212	269	214	270	215	272
14,000	24	17	86	370	740	205	268	207	271	209	273	210	275
16,000	20	13	84	353	706	200	270	202	273	204	275	205	277
18,000	16	9	81	337	674	195	272	197	275	199	277	201	279
20,000	13	5	78	325	650	190	274	192	277	194	280	196	283
22,000	9	1	76	311	622	184	274	187	278	189	281	191	284
24,000	5	-3	71	290	580	175	271	179	276	181	280	184	283
26,000	0	-7	66	269	538	166	266	170	272	173	277	176	281
28,000	-4	-11	61	248	496	154	257	161	266	164	273	168	278
29,000	-6	-12	58	238	476	147	248	154	261	159	269	163	276
31,000	-11	-16	53	218	436	- - -	- - -	141	248	149	262	154	270
33,000	-15	-20	48	202	404	- - -	- - -	- - -	- - -	135	248	144	262
35,000	-19	-24	44	185	370	- - -	- - -	- - -	- - -	- - -	- - -	130	247

BT05741

Figure 7-73. Maximum Cruise Power, 1800 RPM, ISA +30°C

MAXIMUM CRUISE POWER

1800 RPM

ISA + 37°C

NOTE: IOAT, TORQUE, AND FUEL FLOW BASED ON 12,000 POUNDS.

PRESS. ALT	IOAT	OAT	TORQUE PER ENG	FUEL FLOW PER ENG	TOTAL FUEL FLOW	AIRSPEED ~ KNOTS							
						13,000 LBS		12,000 LBS		11,000 LBS		10,000 LBS	
FEET	°C	°C	PERCENT	LBS/HR	LBS/HR	IAS	TAS	IAS	TAS	IAS	TAS	IAS	TAS
SL	58	52	100	501	1002	234	250	236	251	236	252	237	253
2000	54	48	100	487	974	232	255	233	256	234	257	235	258
4000	50	44	99	470	940	228	258	230	260	231	261	232	262
6000	46	40	96	447	894	223	261	225	262	226	264	227	265
8000	43	36	92	423	846	218	262	219	264	221	265	222	267
10,000	39	32	89	399	798	212	263	214	265	215	267	216	268
12,000	35	28	84	373	746	205	263	207	265	209	267	210	269
14,000	31	24	82	356	712	200	264	202	267	204	269	205	271
16,000	27	20	79	341	682	195	266	197	269	199	272	201	274
18,000	23	16	77	325	650	190	268	192	271	194	274	196	276
20,000	19	12	75	314	628	185	270	187	274	190	277	192	280
22,000	15	8	73	301	602	179	271	182	275	185	279	187	282
24,000	11	4	68	282	564	171	268	174	273	177	277	180	281
26,000	7	0	63	261	522	161	262	166	269	169	274	172	279
28,000	3	-4	58	240	480	148	250	156	262	160	269	164	275
29,000	0	-5	56	230	460	139	239	149	256	155	266	159	273
31,000	-4	-9	50	211	422	- - -	- - -	134	239	144	257	150	267
33,000	-8	-13	47	195	390	- - -	- - -	- - -	- - -	130	241	140	258
35,000	-12	-17	43	180	360	- - -	- - -	- - -	- - -	- - -	- - -	125	242

BT05742

Figure 7-74. Maximum Cruise Power, 1800 RPM, ISA +37°C

MAXIMUM CRUISE SPEEDS

1800 RPM

WEIGHT 12,000 LBS

NOTE: DURING OPERATION WITH ICE VANES EXTENDED, TRUE AIRSPEED WILL BE REDUCED APPROXIMATELY 30 KNOTS IF ORIGINAL POWER IS NOT OR CANNOT BE RESET, BUT WILL BE UNCHANGED IF THE ORIGINAL POWER IS RESET.

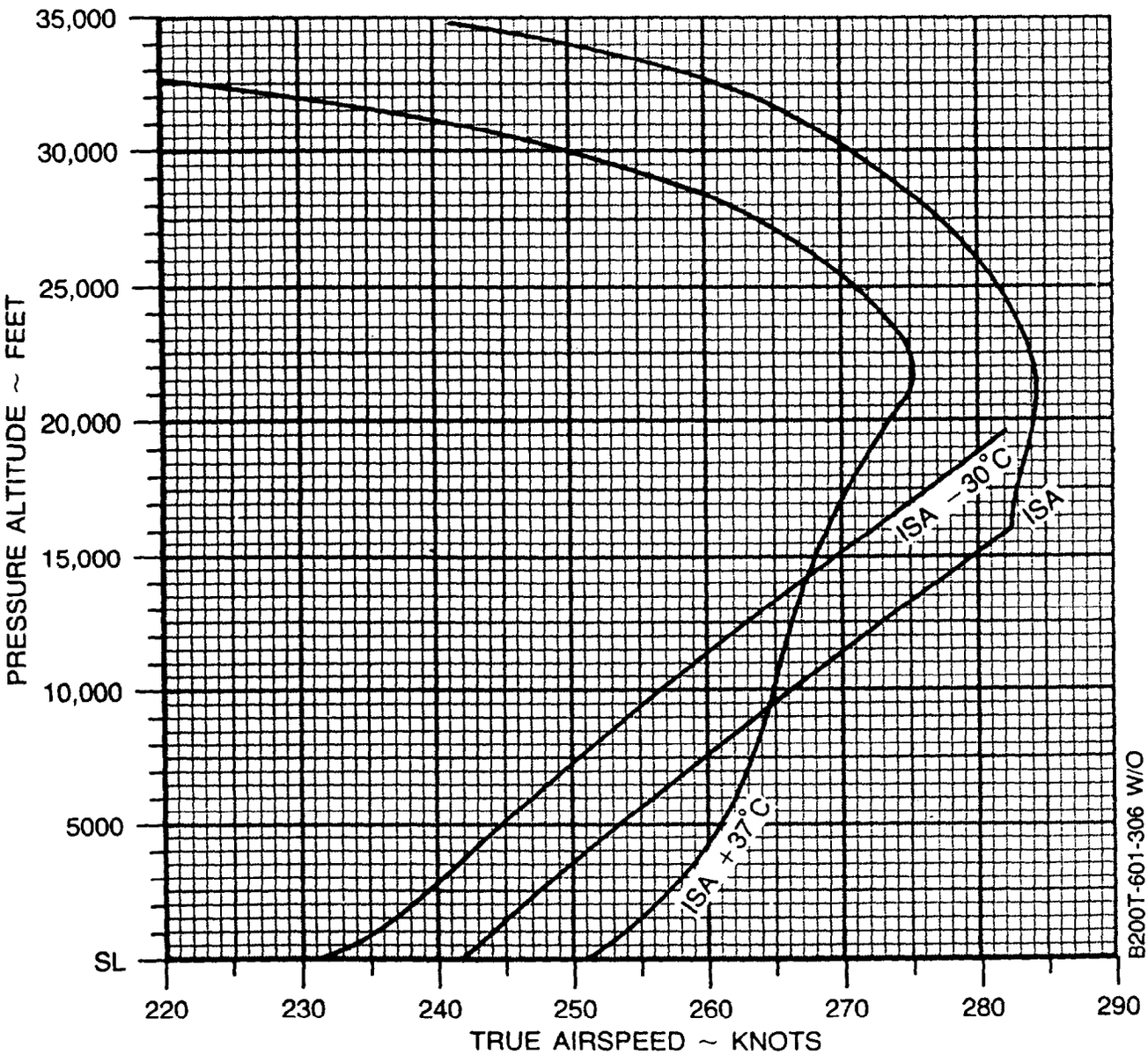

Figure 7-75. Maximum Cruise Speeds, 1800 RPM

MAXIMUM CRUISE POWER

1800 RPM

NOTES: 1. DURING OPERATION WITH ICE VANES EXTENDED, TORQUE WILL DECREASE APPROXIMATELY 20%. IF DESIRED. ORIGINAL POWER MAY BE RESET. PROVIDED ITT LIMIT IS NOT EXCEEDED.

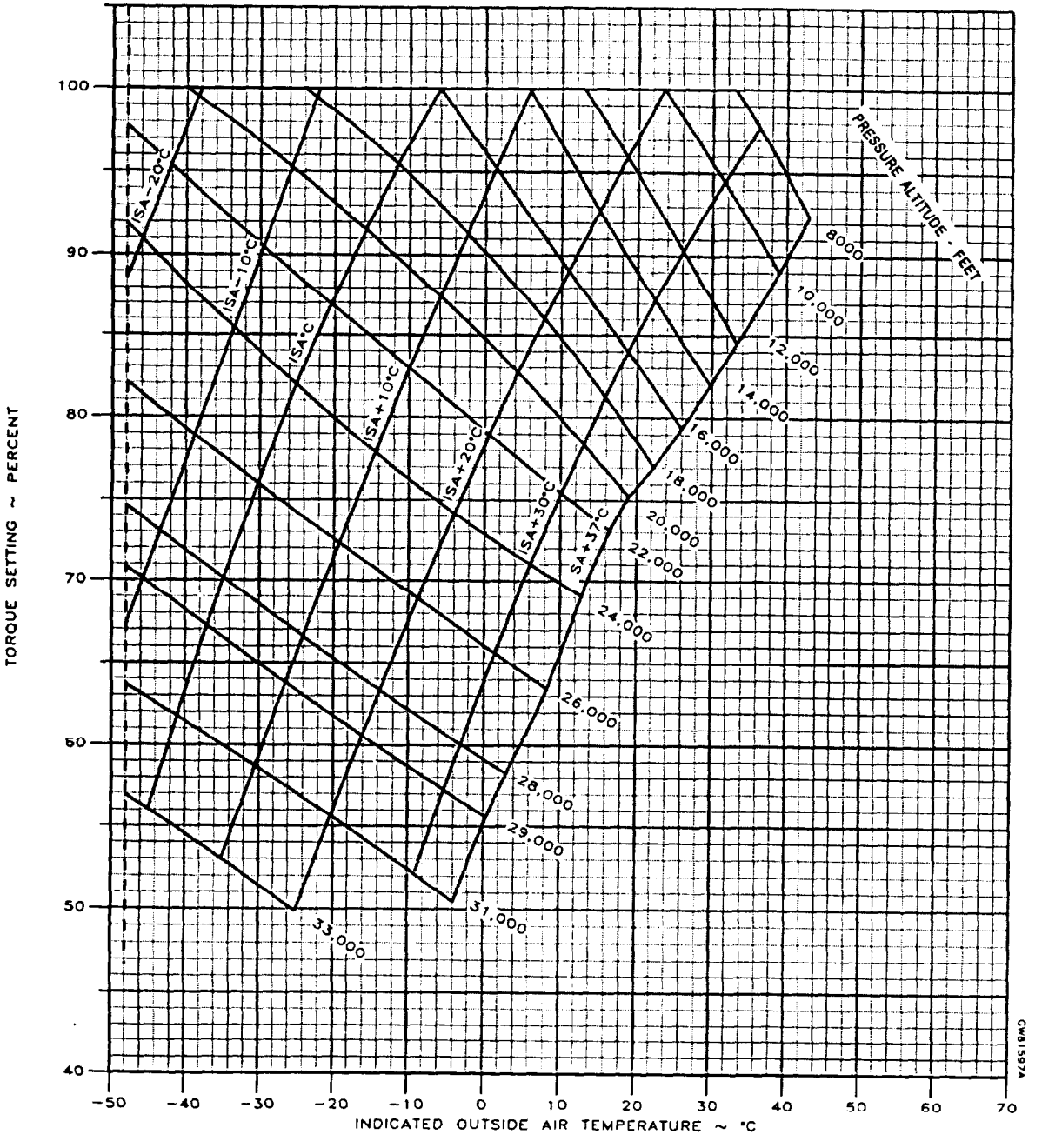

Figure 7-76. Maximum Cruise Power, 1800 RPM

FUEL FLOW AT MAXIMUM CRUISE POWER

1800 RPM

NOTE: DURING OPERATION WITH ICE VANES EXTENDED, FUEL FLOW WILL DECREASE APPROXIMATELY 10% IF ORIGINAL POWER IS NOT OR CANNOT BE RESET. IF ORIGINAL POWER IS RESET, FUEL FLOW WILL INCREASE APPROXIMATELY 30 LBS/HR/ENG.

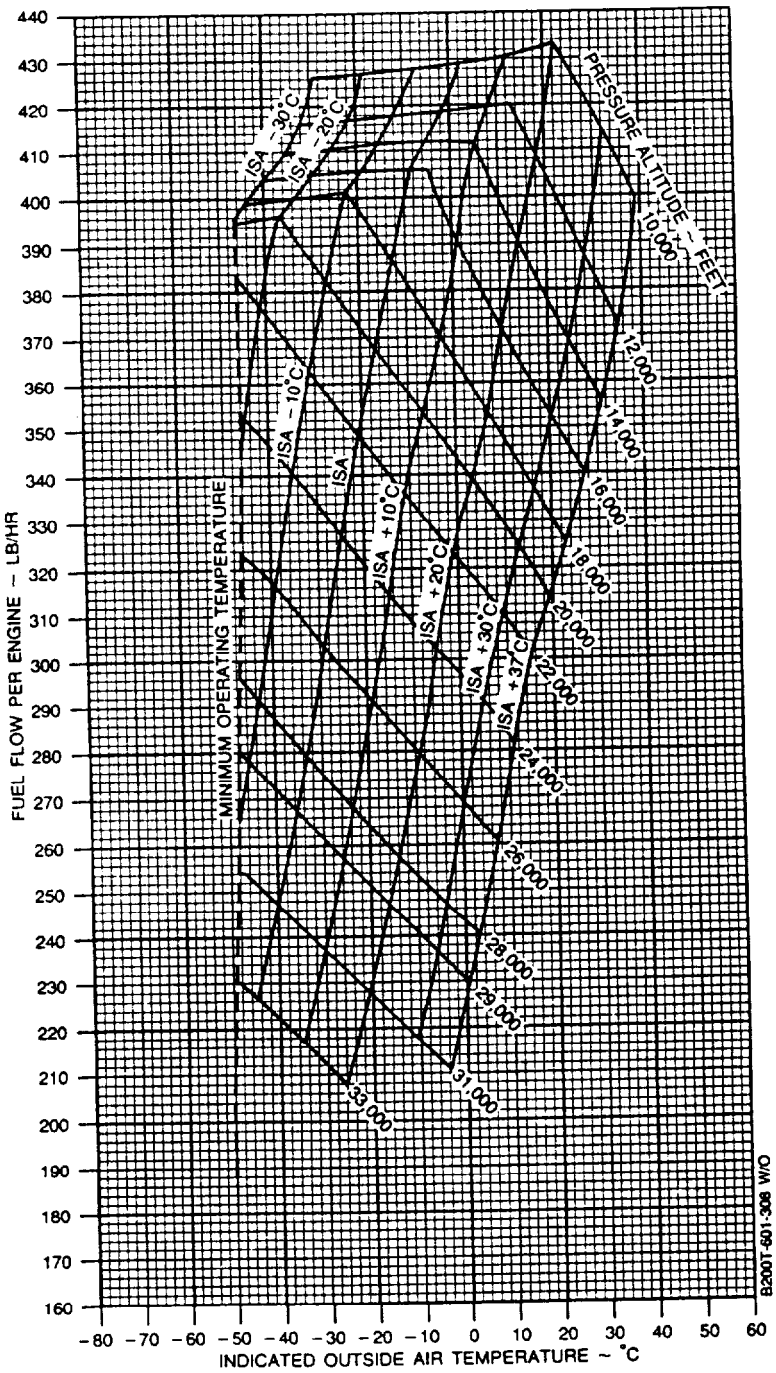

Figure 7-77. Fuel Flow At Maximum Cruise Power, 1800 RPM

RANGE PROFILE - MAXIMUM CRUISE POWER

1800 RPM

STANDARD DAY (ISA)
ZERO WIND

ASSOCIATED CONDITIONS:

WEIGHT	14,090 LBS BEFORE ENGINE START
FUEL	AVIATION KEROSENE
FUEL DENSITY	6.7 LBS/GAL
ICE VANES	RETRACTED

EXAMPLE:

PRESSURE ALTITUDE	26,000 FT
FUEL USED	2586 LBS
RANGE	968 NM

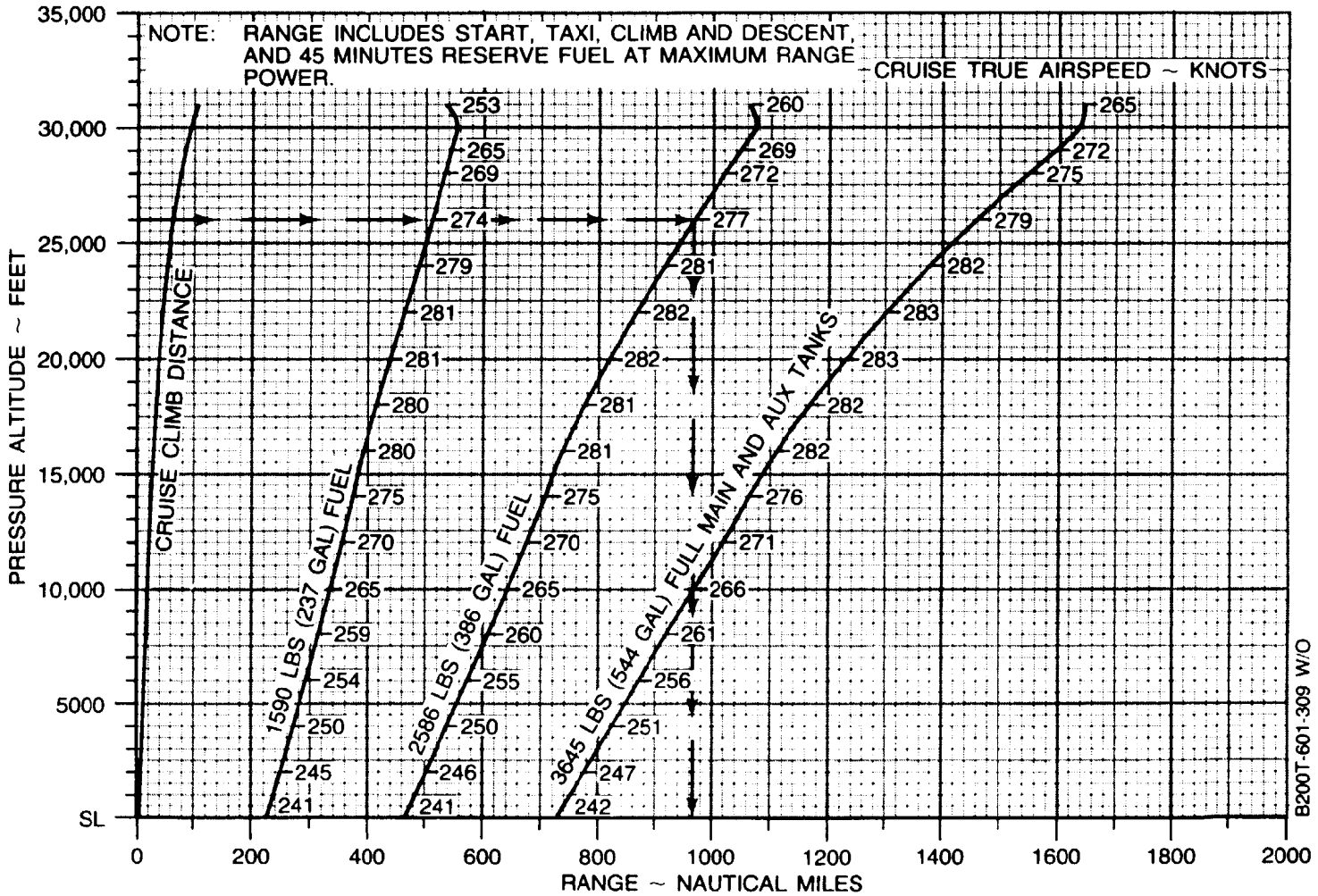

Figure 7-78. Range Profile - Maximum Cruise Power, 1800 RPM

MAXIMUM RANGE POWER

1700 RPM

ISA - 30°C

NOTE: DURING OPERATION WITH ICE VANES EXTENDED, TORQUE WILL DECREASE. IN ORDER TO MAINTAIN MAXIMUM RANGE CONFIGURATION, DO NOT RESET POWER TO ORIGINAL SETTING. FUEL FLOW WILL REMAIN ABOUT THE SAME, BUT TRUE AIRSPEED WILL BE REDUCED APPROXIMATELY 10 KNOTS.

WEIGHT →			13,000 POUNDS					12,000 POUNDS				
PRESSURE ALTITUDE	IOAT	OAT	TORQUE PER ENG	FUEL FLOW PER ENG	FUEL FLOW TOTAL	IAS	TAS	TORQUE PER ENG	FUEL FLOW PER ENG	FUEL FLOW TOTAL	IAS	TAS
FEET	°C	°C	PERCENT	LB/HR	LB/HR	KTS	KTS	PERCENT	LB/HR	LB/HR	KTS	KTS
SL	-11	-15	73	394	788	210	200	69	384	768	207	197
2000	-15	-19	67	365	730	201	197	64	355	710	199	195
4000	-20	-23	63	337	674	194	195	59	327	654	191	192
6000	-24	-27	59	314	628	187	194	55	302	604	184	191
8000	-28	-31	56	292	584	181	193	52	280	560	177	189
10,000	-32	-35	54	273	546	175	193	49	260	520	171	189
12,000	-35	-39	53	258	516	171	194	48	244	488	167	189
14,000	-39	-43	51	245	490	167	194	46	230	460	162	189
16,000	-43	-47	50	234	468	163	196	45	218	436	158	190
18,000	-47	-51	50	223	446	158	197	44	206	412	153	190
20,000	- - -	- - -	- - -	- - -	- - -	- - -	- - -	- - -	- - -	- - -	- - -	- - -
22,000	- - -	- - -	- - -	- - -	- - -	- - -	- - -	- - -	- - -	- - -	- - -	- - -
24,000	- - -	- - -	- - -	- - -	- - -	- - -	- - -	- - -	- - -	- - -	- - -	- - -
26,000	- - -	- - -	- - -	- - -	- - -	- - -	- - -	- - -	- - -	- - -	- - -	- - -
28,000	- - -	- - -	- - -	- - -	- - -	- - -	- - -	- - -	- - -	- - -	- - -	- - -
29,000	- - -	- - -	- - -	- - -	- - -	- - -	- - -	- - -	- - -	- - -	- - -	- - -
31,000	- - -	- - -	- - -	- - -	- - -	- - -	- - -	- - -	- - -	- - -	- - -	- - -
33,000	- - -	- - -	- - -	- - -	- - -	- - -	- - -	- - -	- - -	- - -	- - -	- - -
35,000	- - -	- - -	- - -	- - -	- - -	- - -	- - -	- - -	- - -	- - -	- - -	- - -

BT05743

Figure 7-79. Maximum Range Power, 1700 RPM, ISA -30°C (Sheet 1 of 2)

MAXIMUM RANGE POWER

1700 RPM

ISA - 30°C

NOTE: DURING OPERATION WITH ICE VANES EXTENDED, TORQUE WILL DECREASE. IN ORDER TO MAINTAIN MAXIMUM RANGE CONFIGURATION, DO NOT RESET POWER TO ORIGINAL SETTING. FUEL FLOW WILL REMAIN ABOUT THE SAME, BUT TRUE AIRSPEED WILL BE REDUCED APPROXIMATELY 10 KNOTS.

WEIGHT →			11,000 POUNDS					10,000 POUNDS				
PRESSURE ALTITUDE	IOAT	OAT	TORQUE PER ENG	FUEL FLOW PER ENG	FUEL FLOW TOTAL	IAS	TAS	TORQUE PER ENG	FUEL FLOW PER ENG	FUEL FLOW TOTAL	IAS	TAS
FEET	°C	°C	PERCENT	LB/HR	LB/HR	KTS	KTS	PERCENT	LB/HR	LB/HR	KTS	KTS
SL	-11	-15	66	376	734	205	195	63	368	736	203	193
2000	-15	-19	61	347	694	197	192	57	338	676	194	190
4000	-20	-23	55	316	632	188	189	51	306	612	184	186
6000	-24	-27	51	290	580	180	187	47	278	556	176	183
8000	-28	-31	48	267	534	173	185	43	255	510	169	180
10,000	-32	-35	45	246	492	167	184	40	233	466	162	179
12,000	-35	-39	43	229	458	162	184	38	215	430	157	178
14,000	-39	-43	41	214	428	156	183	35	199	398	150	176
16,000	-43	-47	39	201	402	152	183	34	184	368	145	175
18,000	-47	-51	38	188	376	146	182	31	169	338	138	172
20,000	- - -	- - -	- - -	- - -	- - -	- - -	- - -	- - -	- - -	- - -	- - -	- - -
22,000	- - -	- - -	- - -	- - -	- - -	- - -	- - -	- - -	- - -	- - -	- - -	- - -
24,000	- - -	- - -	- - -	- - -	- - -	- - -	- - -	- - -	- - -	- - -	- - -	- - -
26,000	- - -	- - -	- - -	- - -	- - -	- - -	- - -	- - -	- - -	- - -	- - -	- - -
28,000	- - -	- - -	- - -	- - -	- - -	- - -	- - -	- - -	- - -	- - -	- - -	- - -
29,000	- - -	- - -	- - -	- - -	- - -	- - -	- - -	- - -	- - -	- - -	- - -	- - -
31,000	- - -	- - -	- - -	- - -	- - -	- - -	- - -	- - -	- - -	- - -	- - -	- - -
33,000	- - -	- - -	- - -	- - -	- - -	- - -	- - -	- - -	- - -	- - -	- - -	- - -
35,000	- - -	- - -	- - -	- - -	- - -	- - -	- - -	- - -	- - -	- - -	- - -	- - -

BT05744

Figure 7-79. Maximum Range Power, 1700 RPM, ISA -30°C (Sheer 2 of 2)

MAXIMUM RANGE POWER

1700 RPM

ISA - 20°C

NOTE: DURING OPERATION WITH ICE VANES EXTENDED, TORQUE WILL DECREASE. IN ORDER TO MAINTAIN MAXIMUM RANGE CONFIGURATION, DO NOT RESET POWER TO ORIGINAL SETTING. FUEL FLOW WILL REMAIN ABOUT THE SAME, BUT TRUE AIRSPEED WILL BE REDUCED APPROXIMATELY 10 KNOTS.

WEIGHT →			13,000 POUNDS					12,000 POUNDS				
PRESSURE ALTITUDE	IOAT	OAT	TORQUE PER ENG	FUEL FLOW PER ENG	FUEL FLOW TOTAL	IAS	TAS	TORQUE PER ENG	FUEL FLOW PER ENG	FUEL FLOW TOTAL	IAS	TAS
FEET	°C	°C	PERCENT	LB/HR	LB/HR	KTS	KTS	PERCENT	LB/HR	LB/HR	KTS	KTS
SL	-1	-5	77	407	814	214	207	74	398	796	211	205
2000	-5	-9	72	379	758	206	205	67	367	734	202	201
4000	-9	-13	67	351	702	197	202	63	339	678	194	199
6000	-13	-17	63	327	654	191	201	59	316	632	187	198
8000	-17	-21	60	306	612	185	201	56	294	588	181	197
10,000	-21	-25	57	284	568	178	200	53	272	544	175	196
12,000	-25	-29	56	270	540	174	201	52	257	514	170	197
14,000	-29	-33	55	257	514	170	202	50	243	486	166	198
16,000	-33	-37	54	245	490	165	203	49	230	460	161	198
18,000	-37	-41	53	236	472	162	205	48	220	440	157	199
20,000	-41	-45	53	228	456	158	207	47	210	420	152	200
22,000	-45	-49	53	223	446	156	211	47	204	408	150	203
24,000	-49	-53	54	222	444	155	217	48	202	404	149	208
26,000	- - -	- - -	- - -	- - -	- - -	- - -	- - -	- - -	- - -	- - -	- - -	- - -
28,000	- - -	- - -	- - -	- - -	- - -	- - -	- - -	- - -	- - -	- - -	- - -	- - -
29,000	- - -	- - -	- - -	- - -	- - -	- - -	- - -	- - -	- - -	- - -	- - -	- - -
31,000	- - -	- - -	- - -	- - -	- - -	- - -	- - -	- - -	- - -	- - -	- - -	- - -
33,000	- - -	- - -	- - -	- - -	- - -	- - -	- - -	- - -	- - -	- - -	- - -	- - -
35,000	- - -	- - -	- - -	- - -	- - -	- - -	- - -	- - -	- - -	- - -	- - -	- - -

BT05745

Figure 7-80. Maximum Range Power, 1700 RPM, ISA -20°C (Sheet 1 of 2)

MAXIMUM RANGE POWER

1700 RPM

ISA - 20°C

NOTE: DURING OPERATION WITH ICE VANES EXTENDED, TORQUE WILL DECREASE. IN ORDER TO MAINTAIN MAXIMUM RANGE CONFIGURATION, DO NOT RESET POWER TO ORIGINAL SETTING. FUEL FLOW WILL REMAIN ABOUT THE SAME, BUT TRUE AIRSPEED WILL BE REDUCED APPROXIMATELY 10 KNOTS.

WEIGHT →			11,000 POUNDS					10,000 POUNDS				
PRESSURE ALTITUDE	IOAT	OAT	TORQUE PER ENG	FUEL FLOW PER ENG	FUEL FLOW TOTAL	IAS	TAS	TORQUE PER ENG	FUEL FLOW PER ENG	FUEL FLOW TOTAL	IAS	TAS
FEET	°C	°C	PERCENT	LB/HR	LB/HR	KTS	KTS	PERCENT	LB/HR	LB/HR	KTS	KTS
SL	-1	-5	70	388	776	208	202	67	380	760	206	200
2000	-5	-9	64	358	716	199	199	61	349	698	197	196
4000	-9	-13	59	330	660	191	196	56	321	642	189	194
6000	-13	-17	56	306	612	185	195	52	296	592	182	192
8000	-17	-21	52	284	568	178	194	49	273	546	175	191
10,000	-21	-25	49	261	522	171	192	45	250	500	168	188
12,000	-25	-29	47	245	490	167	193	43	233	466	163	188
14,000	-29	-33	46	230	460	162	193	41	217	434	157	187
16,000	-33	-37	44	216	432	156	192	38	201	402	151	186
18,000	-37	-41	42	204	408	152	193	37	187	374	145	185
20,000	-41	-45	41	192	384	147	192	35	174	348	139	183
22,000	-45	-49	41	185	370	143	195	34	166	332	136	185
24,000	-49	-53	42	183	366	142	200	36	164	328	136	191
26,000	- - -	- - -	- - -	- - -	- - -	- - -	- - -	- - -	- - -	- - -	- - -	- - -
28,000	- - -	- - -	- - -	- - -	- - -	- - -	- - -	- - -	- - -	- - -	- - -	- - -
29,000	- - -	- - -	- - -	- - -	- - -	- - -	- - -	- - -	- - -	- - -	- - -	- - -
31,000	- - -	- - -	- - -	- - -	- - -	- - -	- - -	- - -	- - -	- - -	- - -	- - -
33,000	- - -	- - -	- - -	- - -	- - -	- - -	- - -	- - -	- - -	- - -	- - -	- - -
35,000	- - -	- - -	- - -	- - -	- - -	- - -	- - -	- - -	- - -	- - -	- - -	- - -

BT05746

Figure 7-80. Maximum Range Power, 1700 RPM, ISA -20°C (Sheet 2 of 2)

MAXIMUM RANGE POWER

1700 RPM

ISA - 10°C

NOTE: DURING OPERATION WITH ICE VANES EXTENDED, TORQUE WILL DECREASE. IN ORDER TO MAINTAIN MAXIMUM RANGE CONFIGURATION, DO NOT RESET POWER TO ORIGINAL SETTING. FUEL FLOW WILL REMAIN ABOUT THE SAME, BUT TRUE AIRSPEED WILL BE REDUCED APPROXIMATELY 10 KNOTS.

WEIGHT →			13,000 POUNDS					12,000 POUNDS				
PRESSURE ALTITUDE	IOAT	OAT	TORQUE PER ENG	FUEL FLOW PER ENG	FUEL FLOW TOTAL	IAS	TAS	TORQUE PER ENG	FUEL FLOW PER ENG	FUEL FLOW TOTAL	IAS	TAS
FEET	°C	°C	PERCENT	LB/HR	LB/HR	KTS	KTS	PERCENT	LB/HR	LB/HR	KTS	KTS
SL	9	5	80	415	830	216	213	76	405	810	213	210
2000	5	1	76	391	782	209	212	72	380	760	206	209
4000	1	-3	71	364	728	201	210	67	352	704	198	207
6000	-3	-7	67	339	678	194	209	63	328	656	191	205
8000	-7	-11	64	317	634	188	208	60	305	610	184	204
10,000	-11	-15	61	295	590	181	207	57	283	566	178	203
12,000	-15	-19	60	281	562	177	209	55	268	536	173	204
14,000	-19	-23	58	267	534	173	210	53	253	506	168	205
16,000	-23	-27	57	257	514	169	212	52	241	482	164	206
18,000	-27	-31	57	247	494	165	214	51	230	460	159	207
20,000	-31	-35	56	240	480	162	217	50	221	442	156	209
22,000	-34	-39	57	235	470	160	221	50	215	430	153	212
24,000	-38	-43	57	232	464	158	226	51	213	426	152	218
26,000	-42	-47	58	230	460	156	232	52	211	422	151	224
28,000	-46	-51	58	226	452	153	234	53	210	420	150	230
29,000	-48	-52	59	229	458	153	239	53	210	420	149	232
31,000	- - -	- - -	- - -	- - -	- - -	- - -	- - -	- - -	- - -	- - -	- - -	- - -
33,000	- - -	- - -	- - -	- - -	- - -	- - -	- - -	- - -	- - -	- - -	- - -	- - -
35,000	- - -	- - -	- - -	- - -	- - -	- - -	- - -	- - -	- - -	- - -	- - -	- - -

BT05747

Figure 7-81. Maximum Range Power, 1700 RPM, ISA -10°C (Sheet 1 of 2)

MAXIMUM RANGE POWER

1700 RPM

ISA - 10°C

NOTE: DURING OPERATION WITH ICE VANES EXTENDED, TORQUE WILL DECREASE. IN ORDER TO MAINTAIN MAXIMUM RANGE CONFIGURATION, DO NOT RESET POWER TO ORIGINAL SETTING. FUEL FLOW WILL REMAIN ABOUT THE SAME, BUT TRUE AIRSPEED WILL BE REDUCED APPROXIMATELY 10 KNOTS.

WEIGHT →			11,000 POUNDS					10,000 POUNDS				
PRESSURE ALTITUDE	IOAT	OAT	TORQUE PER ENG	FUEL FLOW PER ENG	FUEL FLOW TOTAL	IAS	TAS	TORQUE PER ENG	FUEL FLOW PER ENG	FUEL FLOW TOTAL	IAS	TAS
FEET	°C	°C	PERCENT	LB/HR	LB/HR	KTS	KTS	PERCENT	LB/HR	LB/HR	KTS	KTS
SL	9	5	73	395	790	210	207	69	387	774	207	205
2000	5	1	68	370	740	203	206	64	360	720	200	203
4000	1	-3	62	341	682	194	203	59	330	660	190	199
6000	-3	-7	59	316	632	187	201	55	306	612	184	198
8000	-7	-11	55	293	586	181	200	52	283	566	177	197
10,000	-11	-15	52	271	542	174	199	49	260	520	171	196
12,000	-15	-19	51	255	510	169	200	47	244	488	166	196
14,000	-19	-23	49	240	480	164	200	44	228	456	160	195
16,000	-23	-27	47	227	454	159	200	42	214	428	155	195
18,000	-27	-31	45	214	428	154	200	40	200	400	149	194
20,000	-31	-35	44	204	408	150	201	39	189	378	145	194
22,000	-34	-39	44	197	394	147	204	38	180	360	141	196
24,000	-38	-43	45	194	388	146	209	39	176	352	140	200
26,000	-42	-47	46	192	384	145	215	40	173	346	138	206
28,000	-46	-51	47	191	382	144	221	41	172	344	137	211
29,000	-48	-52	48	192	384	144	224	41	172	344	137	214
31,000	- - -	- - -	- - -	- - -	- - -	- - -	- - -	- - -	- - -	- - -	- - -	- - -
33,000	- - -	- - -	- - -	- - -	- - -	- - -	- - -	- - -	- - -	- - -	- - -	- - -
35,000	- - -	- - -	- - -	- - -	- - -	- - -	- - -	- - -	- - -	- - -	- - -	- - -

BT05748

Figure 7-81. Maximum Range Power, 1700 RPM, ISA -10°C (Sheet 2 of 2)

MAXIMUM RANGE POWER

1700 RPM

ISA

NOTE: DURING OPERATION WITH ICE VANES EXTENDED, TORQUE WILL DECREASE. IN ORDER TO MAINTAIN MAXIMUM RANGE CONFIGURATION. DO NOT RESET POWER TO ORIGINAL SETTING. FUEL FLOW WILL REMAIN ABOUT THE SAME, BUT TRUE AIRSPEED WILL BE REDUCED APPROXIMATELY 10 KNOTS.

WEIGHT →			13,000 POUNDS					12,000 POUNDS				
PRESSURE ALTITUDE	IOAT	OAT	TORQUE PER ENG	FUEL FLOW PER ENG	FUEL FLOW TOTAL	IAS	TAS	TORQUE PER ENG	FUEL FLOW PER ENG	FUEL FLOW TOTAL	IAS	TAS
FEET	°C	°C	PERCENT	LB/HR	LB/HR	KTS	KTS	PERCENT	LB/HR	LB/HR	KTS	KTS
SL	19	15	81	420	840	217	218	78	411	822	214	215
2000	15	11	77	395	790	210	217	73	385	770	207	214
4000	11	7	74	374	748	204	217	70	362	724	201	214
6000	7	3	70	348	696	197	216	65	336	672	193	211
8000	3	-1	67	328	656	191	216	63	316	632	188	212
10,000	-1	-5	65	307	614	186	216	60	294	588	182	212
12,000	-5	-9	63	291	582	181	218	58	277	554	177	212
14,000	-9	-13	62	277	554	177	219	57	263	526	172	213
16,000	-12	-17	61	266	532	173	221	55	250	500	167	214
18,000	-16	-21	60	257	514	169	223	54	241	482	163	216
20,000	-20	-25	59	250	500	165	226	53	232	464	160	218
22,000	-24	-29	59	244	488	162	229	53	226	452	157	221
24,000	-28	-33	60	241	482	161	235	54	222	444	155	227
26,000	-31	-37	59	232	464	155	235	55	219	438	154	232
28,000	-35	-41	59	231	462	153	240	54	214	428	150	234
29,000	-37	-42	60	233	466	152	243	54	214	428	148	236
31,000	-41	-46	- - -	- - -	- - -	- - -	- - -	55	214	428	146	242
33,000	- - -	- - -	- - -	- - -	- - -	- - -	- - -	- - -	- - -	- - -	- - -	- - -
35,000	- - -	- - -	- - -	- - -	- - -	- - -	- - -	- - -	- - -	- - -	- - -	- - -

BT05749

Figure 7-82. Maximum Range Power, 1700 RPM, ISA (Sheet 1 of 2)

MAXIMUM RANGE POWER

1700 RPM

ISA

NOTE: DURING OPERATION WITH ICE VANES EXTENDED, TORQUE WILL DECREASE. IN ORDER TO MAINTAIN MAXIMUM RANGE CONFIGURATION. DO NOT RESET POWER TO ORIGINAL SETTING. FUEL FLOW WILL REMAIN ABOUT THE SAME, BUT TRUE AIRSPEED WILL BE REDUCED APPROXIMATELY 10 KNOTS.

WEIGHT →			11,000 POUNDS					10,000 POUNDS				
PRESSURE ALTITUDE	IOAT	OAT	TORQUE PER ENG	FUEL FLOW PER ENG	FUEL FLOW TOTAL	IAS	TAS	TORQUE PER ENG	FUEL FLOW PER ENG	FUEL FLOW TOTAL	IAS	TAS
FEET	°C	°C	PERCENT	LB/HR	LB/HR	KTS	KTS	PERCENT	LB/HR	LB/HR	KTS	KTS
SL	19	15	74	402	804	212	213	72	394	788	210	211
2000	15	11	70	375	750	204	211	66	366	732	201	208
4000	11	7	66	352	704	198	210	63	342	684	195	207
6000	7	3	61	325	650	189	208	58	315	630	186	204
8000	3	-1	59	304	608	184	208	55	293	586	180	204
10,000	-1	-5	56	282	564	178	207	51	271	542	174	203
12,000	-5	-9	54	265	530	173	208	50	253	506	169	203
14,000	-9	-13	52	249	498	167	207	47	236	472	163	202
16,000	-12	-17	50	235	470	162	207	45	222	444	157	202
18,000	-16	-21	48	224	448	158	209	43	210	420	152	202
20,000	-20	-25	47	214	428	153	210	42	198	396	147	202
22,000	-24	-29	47	207	414	150	212	41	190	380	144	204
24,000	-28	-33	48	204	408	149	218	41	185	370	142	208
26,000	-31	-37	49	201	402	148	224	42	182	364	141	214
28,000	-35	-41	50	200	400	147	230	43	181	362	141	221
29,000	-37	-42	50	198	396	145	232	44	181	362	140	224
31,000	-41	-46	49	195	390	142	235	45	180	360	139	230
33,000	-45	-50	50	196	392	140	240	45	178	356	136	233
35,000	- - -	- - -	- - -	- - -	- - -	- - -	- - -	45	178	356	134	238

BT05750

Figure 7-82. Maximum Range Power, 1700 RPM, ISA (Sheet 2 of 2)

MAXIMUM RANGE POWER

1700 RPM

ISA + 10°C

NOTE: DURING OPERATION WITH ICE VANES EXTENDED, TORQUE WILL DECREASE. IN ORDER TO MAINTAIN MAXIMUM RANGE CONFIGURATION, DO NOT RESET POWER TO ORIGINAL SETTING. FUEL FLOW WILL REMAIN ABOUT THE SAME, BUT TRUE AIRSPEED WILL BE REDUCED APPROXIMATELY 10 KNOTS.

WEIGHT →			13,000 POUNDS					12,000 POUNDS				
PRESSURE ALTITUDE	IOAT	OAT	TORQUE PER ENG	FUEL FLOW PER ENG	FUEL FLOW TOTAL	IAS	TAS	TORQUE PER ENG	FUEL FLOW PER ENG	FUEL FLOW TOTAL	IAS	TAS
FEET	°C	°C	PERCENT	LB/HR	LB/HR	KTS	KTS	PERCENT	LB/HR	LB/HR	KTS	KTS
SL	29	25	77	412	824	211	215	75	406	812	210	215
2000	25	21	75	393	786	207	218	73	387	774	206	217
4000	21	17	74	375	750	203	220	71	368	736	202	219
6000	18	13	72	355	710	198	221	69	347	694	196	219
8000	14	9	70	335	670	193	222	66	324	648	190	219
10,000	10	5	67	315	630	188	223	63	303	606	184	219
12,000	6	1	66	299	598	183	225	62	288	576	181	221
14,000	2	-3	64	285	570	179	226	60	273	546	176	222
16,000	-2	-7	63	273	546	174	228	58	260	520	171	223
18,000	-6	-11	62	262	524	170	230	57	248	496	167	225
20,000	-10	-15	61	254	508	166	232	56	239	478	162	226
22,000	-14	-19	61	249	498	163	235	56	234	468	159	229
24,000	-17	-23	59	239	478	157	235	56	229	458	157	233
26,000	-21	-27	60	238	476	156	240	55	220	440	152	234
28,000	-25	-31	60	236	472	152	243	54	217	434	148	237
29,000	-27	-32	61	237	474	151	246	55	217	434	147	240
31,000	- - -	- - -	- - -	- - -	- - -	- - -	- - -	- - -	- - -	- - -	- - -	- - -
33,000	- - -	- - -	- - -	- - -	- - -	- - -	- - -	- - -	- - -	- - -	- - -	- - -
35,000	- - -	- - -	- - -	- - -	- - -	- - -	- - -	- - -	- - -	- - -	- - -	- - -

BT05751

Figure 7-83. Maximum Range Power, 1700 RPM, ISA +10°C (Sheet 1 of 2)

MAXIMUM RANGE POWER

1700 RPM

ISA + 10°C

NOTE: DURING OPERATION WITH ICE VANES EXTENDED, TORQUE WILL DECREASE. IN ORDER TO MAINTAIN MAXIMUM RANGE CONFIGURATION, DO NOT RESET POWER TO ORIGINAL SETTING. FUEL FLOW WILL REMAIN ABOUT THE SAME, BUT TRUE AIRSPEED WILL BE REDUCED APPROXIMATELY 10 KNOTS.

WEIGHT →			11,000 POUNDS					10,000 POUNDS				
PRESSURE ALTITUDE	IOAT	OAT	TORQUE PER ENG	FUEL FLOW PER ENG	FUEL FLOW TOTAL	IAS	TAS	TORQUE PER ENG	FUEL FLOW PER ENG	FUEL FLOW TOTAL	IAS	TAS
FEET	°C	°C	PERCENT	LB/HR	LB/HR	KTS	KTS	PERCENT	LB/HR	LB/HR	KTS	KTS
SL	29	25	73	400	800	209	214	71	394	788	208	212
2000	25	21	71	380	760	205	215	68	372	744	202	213
4000	21	17	68	357	714	199	215	64	347	694	196	212
6000	18	13	65	335	670	193	215	61	325	650	190	212
8000	14	9	62	313	626	187	215	58	302	604	183	211
10,000	10	5	58	291	582	180	214	54	279	558	176	209
12,000	6	1	57	276	552	177	216	53	263	526	173	211
14,000	2	-3	55	260	520	171	216	50	247	494	167	211
16,000	-2	-7	53	245	490	166	217	48	231	462	161	210
18,000	-6	-11	51	233	466	161	217	46	217	434	155	210
20,000	-10	-15	50	222	444	156	218	44	205	410	150	209
22,000	-14	-19	50	217	434	153	221	44	199	398	147	212
24,000	-17	-23	50	212	424	152	226	44	195	390	146	218
26,000	-21	-27	51	208	416	150	231	45	191	382	144	223
28,000	-25	-31	50	202	404	146	234	46	188	376	143	229
29,000	-27	-32	50	199	398	144	234	46	187	374	142	231
31,000	-31	-36	50	199	398	141	239	45	182	364	138	233
33,000	-35	-40	51	202	404	140	246	45	181	362	135	237
35,000	-39	-44	- - -	- - -	- - -	- - -	- - -	46	184	368	134	244

BT05752

Figure 7-83. Maximum Range Power, 1700 RPM ISA +10°C (Sheet 2 of 2)

MAXIMUM RANGE POWER

1700 RPM

ISA + 20°C

NOTE: DURING OPERATION WITH ICE VANES EXTENDED, TORQUE WILL DECREASE. IN ORDER TO MAINTAIN MAXIMUM RANGE CONFIGURATION, DO NOT RESET POWER TO ORIGINAL SETTING. FUEL FLOW WILL REMAIN ABOUT THE SAME, BUT TRUE AIRSPEED WILL BE REDUCED APPROXIMATELY 10 KNOTS.

WEIGHT →			13,000 POUNDS					12,000 POUNDS				
PRESSURE ALTITUDE	IOAT	OAT	TORQUE PER ENG	FUEL FLOW PER ENG	FUEL FLOW TOTAL	IAS	TAS	TORQUE PER ENG	FUEL FLOW PER ENG	FUEL FLOW TOTAL	IAS	TAS
FEET	°C	°C	PERCENT	LB/HR	LB/HR	KTS	KTS	PERCENT	LB/HR	LB/HR	KTS	KTS
SL	39	35	73	405	810	205	213	71	399	798	204	212
2000	35	31	72	386	722	201	215	69	379	758	200	214
4000	31	27	70	367	734	197	217	69	363	726	197	217
6000	28	23	69	349	698	193	219	67	344	688	193	219
8000	24	19	67	330	660	188	220	65	325	650	188	221
10,000	20	15	65	311	622	183	222	63	305	610	183	222
12,000	16	11	63	294	588	179	223	61	289	578	179	223
14,000	12	7	62	281	562	174	224	60	275	550	175	225
16,000	8	3	61	269	538	170	226	59	263	526	171	227
18,000	4	-1	60	258	516	166	228	58	252	504	167	229
20,000	0	-5	60	251	502	163	231	58	244	488	163	232
22,000	-3	-9	59	245	490	159	234	57	236	472	159	234
24,000	-7	-13	60	242	484	157	239	55	226	452	154	234
26,000	-11	-17	61	242	484	156	245	55	222	444	151	238
28,000	-15	-21	61	240	480	152	247	56	223	446	149	244
29,000	-17	-22	- - -	- - -	- - -	- - -	- - -	56	222	444	147	245
31,000	- - -	- - -	- - -	- - -	- - -	- - -	- - -	- - -	- - -	- - -	- - -	- - -
33,000	- - -	- - -	- - -	- - -	- - -	- - -	- - -	- - -	- - -	- - -	- - -	- - -
35,000	- - -	- - -	- - -	- - -	- - -	- - -	- - -	- - -	- - -	- - -	- - -	- - -

BT05753

Figure 7-84. Maximum Range Power, 1700 RPM, ISA +20°C (Sheet 1 of 2)

MAXIMUM RANGE POWER

1700 RPM

ISA + 20°C

NOTE: DURING OPERATION WITH ICE VANES EXTENDED, TORQUE WILL DECREASE. IN ORDER TO MAINTAIN MAXIMUM RANGE CONFIGURATION, DO NOT RESET POWER TO ORIGINAL SETTING. FUEL FLOW WILL REMAIN ABOUT THE SAME, BUT TRUE AIRSPEED WILL BE REDUCED APPROXIMATELY 10 KNOTS.

WEIGHT →			11,000 POUNDS					10,000 POUNDS				
PRESSURE ALTITUDE	IOAT	OAT	TORQUE PER ENG	FUEL FLOW PER ENG	FUEL FLOW TOTAL	IAS	TAS	TORQUE PER ENG	FUEL FLOW PER ENG	FUEL FLOW TOTAL	IAS	TAS
FEET	°C	°C	PERCENT	LB/HR	LB/HR	KTS	KTS	PERCENT	LB/HR	LB/HR	KTS	KTS
SL	39	35	69	393	786	204	212	67	388	776	203	211
2000	35	31	68	374	748	200	214	65	368	736	199	213
4000	31	27	67	356	712	196	217	64	350	700	196	216
6000	28	23	65	338	676	193	219	62	329	658	190	216
8000	24	19	63	318	636	188	220	59	307	614	184	216
10,000	20	15	60	297	594	182	220	56	286	572	178	216
12,000	16	11	59	281	562	178	222	55	269	538	174	217
14,000	12	7	57	267	534	173	223	53	255	510	170	218
16,000	8	3	56	253	506	169	224	51	241	482	165	219
18,000	4	-1	54	241	482	164	226	49	227	454	159	219
20,000	0	-5	53	230	460	159	226	47	214	428	154	219
22,000	-3	-9	52	221	442	155	228	46	205	410	150	220
24,000	-7	-13	52	216	432	153	232	46	199	398	147	224
26,000	-11	-17	51	208	416	148	234	47	195	390	146	230
28,000	-15	-21	50	203	406	144	235	46	191	382	142	233
29,000	-17	-22	51	204	408	144	239	46	188	376	140	233
31,000	-21	-26	51	204	408	142	245	46	186	372	138	237
33,000	-25	-30	- - -	- - -	- - -	- - -	- - -	47	186	372	136	243
35,000	- - -	- - -	- - -	- - -	- - -	- - -	- - -	- - -	- - -	- - -	- - -	- - -

BT05754

Figure 7-84. Maximum Range Power, 1700 RPM, ISA +20°C (Sheet 2 of 2)

MAXIMUM RANGE POWER

1700 RPM

ISA + 30°C

NOTE: DURING OPERATION WITH ICE VANES EXTENDED, TORQUE WILL DECREASE. IN ORDER TO MAINTAIN MAXIMUM RANGE CONFIGURATION, DO NOT RESET POWER TO ORIGINAL SETTING. FUEL FLOW WILL REMAIN ABOUT THE SAME, BUT TRUE AIRSPEED WILL BE REDUCED APPROXIMATELY 10 KNOTS.

WEIGHT →			13,000 POUNDS					12,000 POUNDS				
PRESSURE ALTITUDE	IOAT	OAT	TORQUE PER ENG	FUEL FLOW PER ENG	FUEL FLOW TOTAL	IAS	TAS	TORQUE PER ENG	FUEL FLOW PER ENG	FUEL FLOW TOTAL	IAS	TAS
FEET	°C	°C	PERCENT	LB/HR	LB/HR	KTS	KTS	PERCENT	LB/HR	LB/HR	KTS	KTS
SL	49	45	75	410	820	205	217	70	399	798	202	214
2000	45	41	70	384	768	198	215	67	375	750	196	213
4000	41	37	68	363	726	193	216	65	355	710	192	215
6000	37	33	66	345	690	189	218	64	337	674	188	217
8000	34	29	64	325	650	184	219	62	318	636	183	218
10,000	30	25	62	306	612	179	219	60	298	596	178	219
12,000	26	21	61	291	582	174	221	59	283	566	174	220
14,000	22	17	60	278	556	170	223	57	269	538	169	221
16,000	18	13	60	268	536	167	226	56	257	514	165	224
18,000	14	9	60	259	518	163	229	56	248	496	162	227
20,000	10	5	59	252	504	160	232	56	240	480	159	230
22,000	6	1	60	249	498	159	238	55	232	464	155	232
24,000	3	-3	62	249	498	158	245	55	226	452	151	235
26,000	-1	-7	61	243	486	153	246	57	228	456	152	244
28,000	-5	-11	- - -	- - -	- - -	- - -	- - -	56	224	448	148	246
29,000	- - -	- - -	- - -	- - -	- - -	- - -	- - -	- - -	- - -	- - -	- - -	- - -
31,000	- - -	- - -	- - -	- - -	- - -	- - -	- - -	- - -	- - -	- - -	- - -	- - -
33,000	- - -	- - -	- - -	- - -	- - -	- - -	- - -	- - -	- - -	- - -	- - -	- - -
35,000	- - -	- - -	- - -	- - -	- - -	- - -	- - -	- - -	- - -	- - -	- - -	- - -

BT05755

Figure 7-85. Maximum Range Power, 1700 RPM, ISA +30°C (Sheet 1 of 2)

MAXIMUM RANGE POWER

1700 RPM

ISA + 30°C

NOTE: DURING OPERATION WITH ICE VANES EXTENDED, TORQUE WILL DECREASE. IN ORDER TO MAINTAIN MAXIMUM RANGE CONFIGURATION, DO NOT RESET POWER TO ORIGINAL SETTING. FUEL FLOW WILL REMAIN ABOUT THE SAME, BUT TRUE AIRSPEED WILL BE REDUCED APPROXIMATELY 10 KNOTS.

WEIGHT →			11,000 POUNDS					10,000 POUNDS				
PRESSURE ALTITUDE	IOAT	OAT	TORQUE PER ENG	FUEL FLOW PER ENG	FUEL FLOW TOTAL	IAS	TAS	TORQUE PER ENG	FUEL FLOW PER ENG	FUEL FLOW TOTAL	IAS	TAS
FEET	°C	°C	PERCENT	LB/HR	LB/HR	KTS	KTS	PERCENT	LB/HR	LB/HR	KTS	KTS
SL	49	45	67	390	780	200	211	64	383	766	198	209
2000	45	41	65	368	736	195	212	62	362	724	194	211
4000	41	37	63	350	700	191	214	61	344	688	190	213
6000	37	33	62	332	664	187	216	60	326	652	187	216
8000	34	29	60	313	626	183	218	58	307	614	183	218
10,000	30	25	58	294	588	178	219	56	287	574	178	218
12,000	26	21	57	278	556	174	221	55	272	544	174	220
14,000	22	17	56	264	528	170	223	53	258	516	169	222
16,000	18	13	55	252	504	166	225	52	245	490	166	224
18,000	14	9	54	242	484	163	228	51	233	466	161	226
20,000	10	5	54	234	468	159	231	49	222	444	156	226
22,000	6	1	53	225	450	156	233	48	212	424	152	228
24,000	3	-3	51	214	428	150	232	48	204	408	149	231
26,000	-1	-7	50	205	410	144	232	47	196	392	144	232
28,000	-5	-11	52	209	418	146	244	45	187	374	139	231
29,000	-7	-12	52	207	414	144	244	46	188	376	139	236
31,000	-11	-16	52	205	410	140	247	47	188	376	138	243
33,000	- - -	- - -	- - -	- - -	- - -	- - -	- - -	- - -	- - -	- - -	- - -	- - -
35,000	- - -	- - -	- - -	- - -	- - -	- - -	- - -	- - -	- - -	- - -	- - -	- - -

BT05756

Figure 7-85. Maximum Range Power, 1700 RPM, ISA +30°C (Sheet 2 of 2)

MAXIMUM RANGE POWER

1700 RPM

ISA + 37°C

NOTE: DURING OPERATION WITH ICE VANES EXTENDED, TORQUE WILL DECREASE. IN ORDER TO MAINTAIN MAXIMUM RANGE CONFIGURATION, DO NOT RESET POWER TO ORIGINAL SETTING. FUEL FLOW WILL REMAIN ABOUT THE SAME, BUT TRUE AIRSPEED WILL BE REDUCED APPROXIMATELY 10 KNOTS.

WEIGHT →			13,000 POUNDS					12,000 POUNDS				
PRESSURE ALTITUDE	IOAT	OAT	TORQUE PER ENG	FUEL FLOW PER ENG	FUEL FLOW TOTAL	IAS	TAS	TORQUE PER ENG	FUEL FLOW PER ENG	FUEL FLOW TOTAL	IAS	TAS
FEET	°C	°C	PERCENT	LB/HR	LB/HR	KTS	KTS	PERCENT	LB/HR	LB/HR	KTS	KTS
SL	56	52	77	420	840	207	222	73	407	814	204	218
2000	52	48	74	395	790	201	221	68	380	760	197	216
4000	48	44	70	370	740	194	220	65	357	714	191	216
6000	44	40	66	347	694	188	220	63	335	670	185	216
8000	41	36	65	328	656	183	221	61	316	632	180	217
10,000	37	32	63	310	620	179	222	59	297	594	176	218
12,000	33	28	63	296	592	175	225	58	282	564	172	220
14,000	29	24	62	284	568	171	227	57	269	538	167	222
16,000	25	20	62	274	548	168	230	56	258	516	164	224
18,000	21	16	62	267	534	166	235	55	248	496	160	227
20,000	17	12	62	261	522	163	239	55	241	482	157	230
22,000	14	8	62	256	512	160	243	55	235	470	154	234
24,000	10	4	62	249	498	156	245	57	234	468	154	242
26,000	6	0	63	248	496	154	250	57	229	458	150	245
28,000	2	-4	- - -	- - -	- - -	- - -	- - -	58	228	456	148	250
29,000	- - -	- - -	- - -	- - -	- - -	- - -	- - -	- - -	- - -	- - -	- - -	- - -
31,000	- - -	- - -	- - -	- - -	- - -	- - -	- - -	- - -	- - -	- - -	- - -	- - -
33,000	- - -	- - -	- - -	- - -	- - -	- - -	- - -	- - -	- - -	- - -	- - -	- - -
35,000	- - -	- - -	- - -	- - -	- - -	- - -	- - -	- - -	- - -	- - -	- - -	- - -

BT05757

Figure 7-86. Maximum Range Power, 1700 RPM, ISA +37°C (Sheet 1 of 2)

MAXIMUM RANGE POWER

1700 RPM

ISA + 37°C

NOTE: DURING OPERATION WITH ICE VANES EXTENDED, TORQUE WILL DECREASE. IN ORDER TO MAINTAIN MAXIMUM RANGE CONFIGURATION, DO NOT RESET POWER TO ORIGINAL SETTING. FUEL FLOW WILL REMAIN ABOUT THE SAME, BUT TRUE AIRSPEED WILL BE REDUCED APPROXIMATELY 10 KNOTS.

WEIGHT →			11,000 POUNDS					10,000 POUNDS				
PRESSURE ALTITUDE	IOAT	OAT	TORQUE PER ENG	FUEL FLOW PER ENG	FUEL FLOW TOTAL	IAS	TAS	TORQUE PER ENG	FUEL FLOW PER ENG	FUEL FLOW TOTAL	IAS	TAS
FEET	°C	°C	PERCENT	LB/HR	LB/HR	KTS	KTS	PERCENT	LB/HR	LB/HR	KTS	KTS
SL	56	52	68	394	788	200	214	64	383	766	197	210
2000	52	48	64	369	738	194	213	61	360	720	191	210
4000	48	44	62	348	696	189	214	60	341	682	187	212
6000	44	40	60	327	654	184	215	58	322	644	183	214
8000	41	36	58	309	618	179	216	56	303	606	179	216
10,000	37	32	56	290	580	175	217	56	284	568	175	217
12,000	33	28	55	274	548	171	219	53	268	536	171	219
14,000	29	24	54	260	520	166	220	52	255	510	167	221
16,000	25	20	53	248	496	162	222	51	243	486	163	223
18,000	21	16	52	238	476	159	225	50	232	464	159	226
20,000	17	12	52	231	462	156	229	50	224	448	156	229
22,000	14	8	52	223	446	152	231	49	215	430	152	231
24,000	10	4	50	213	426	147	232	48	204	408	147	232
26,000	6	0	52	212	424	147	239	46	193	386	141	231
28,000	2	-4	51	210	420	145	244	47	190	380	139	239
29,000	0	-5	52	209	418	143	246	47	191	382	137	245
31,000	- - -	- - -	- - -	- - -	- - -	- - -	- - -	- - -	- - -	- - -	- - -	- - -
33,000	- - -	- - -	- - -	- - -	- - -	- - -	- - -	- - -	- - -	- - -	- - -	- - -
35,000	- - -	- - -	- - -	- - -	- - -	- - -	- - -	- - -	- - -	- - -	- - -	- - -

BT05758

Figure 7-86. Maximum Range Power, 1700 RPM, ISA +37°C (Sheet 2 of 2)

RANGE PROFILE - MAXIMUM RANGE POWER

1700 RPM

ASSOCIATED CONDITIONS:

WEIGHT	14,090 LBS BEFORE ENGINE START
FUEL	AVIATION KEROSENE
FUEL DENSITY	6.7 LBS/GAL
ICE VANES	RETRACTED

STANDARD DAY (ISA)
ZERO WIND

EXAMPLE:

PRESSURE ALTITUDE	26,000 FT
FUEL USED	2586 LBS
RANGE	1065 NM

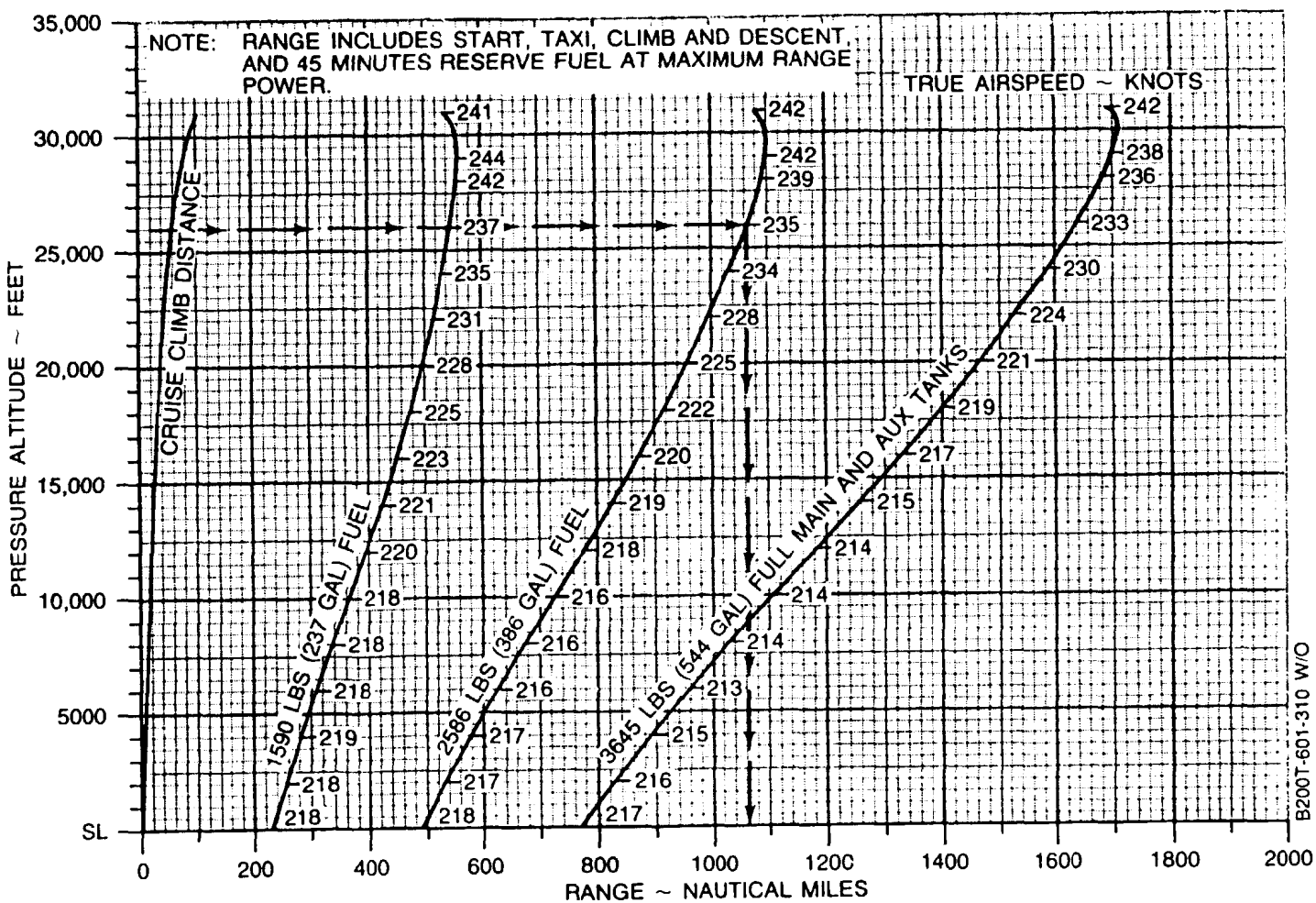

Figure 7-87. Range Profile - Maximum Range Power, 1700 RPM

RANGE PROFILE - FULL MAIN AND AUX TANKS

STANDARD DAY
ZERO WIND

ASSOCIATED CONDITIONS:

WEIGHT	14,090 LBS BEFORE ENGINE START
FUEL	AVIATION KEROSENE
FUEL DENSITY	6.7 LBS/GAL
ICE VANES	RETRACTED

EXAMPLE:

PRESSURE ALTITUDE	26,000 FT
RANGE @ MAX CRUISE - 1800 RPM	1460 NM
RANGE @ MAX RANGE - 1700 RPM	1640 NM

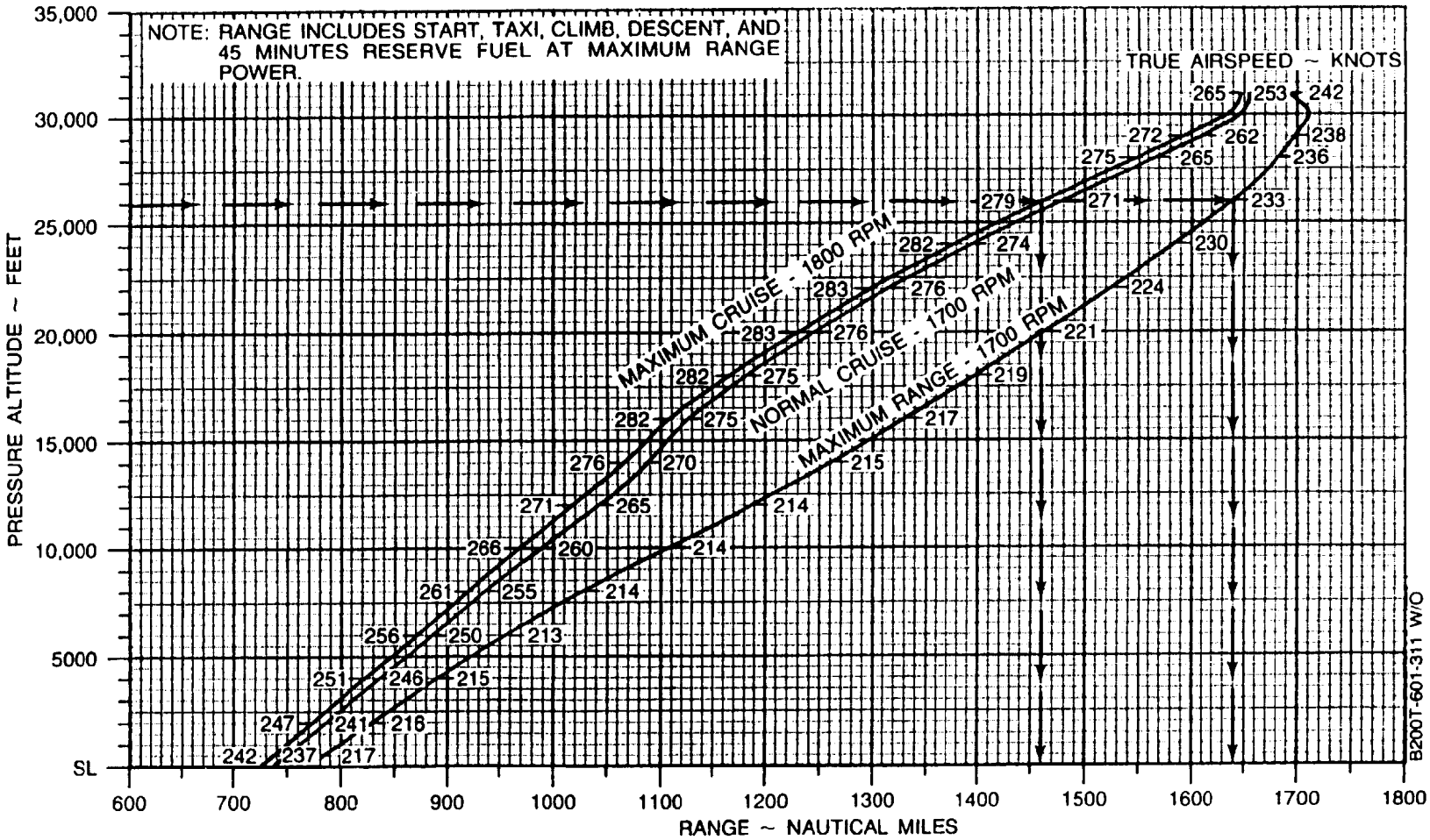

Figure 7-88. Range Profile - Full Main and Auxiliary Tanks

ENDURANCE PROFILE - FULL MAIN AND AUX TANKS

STANDARD DAY

ASSOCIATED CONDITIONS:

WEIGHT ..... 14,090 LBS BEFORE ENGINE START
FUEL ..... AVIATION KEROSENE
FUEL DENSITY ..... 6.7 LBS/GAL
ICE VANES ..... RETRACTED

EXAMPLE:

PRESSURE ALTITUDE ..... 26,000 FT

RANGE @ MAX CRUISE - 1800 RPM ..... 5.37 HRS
RANGE @ MAX RANGE - 1700 RPM ..... 7.05 HRS

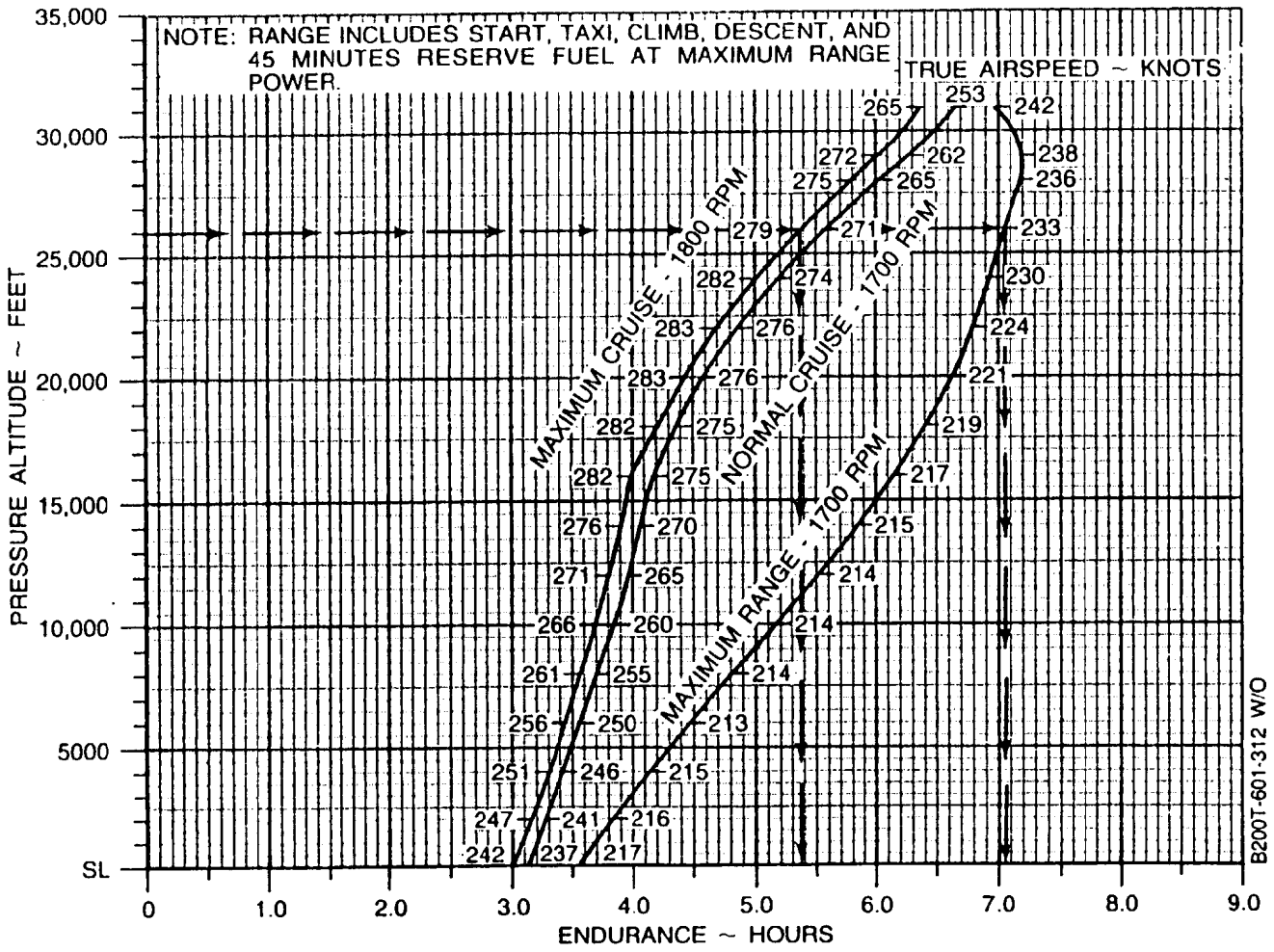

Figure 7-89. Endurance Profile - Full Main and Auxiliary Tanks

RANGE PROFILE - FULL MAIN TANKS

STANDARD DAY
ZERO WIND

ASSOCIATED CONDITIONS:

WEIGHT	14,090 LBS BEFORE ENGINE START
FUEL	AVIATION KEROSENE
FUEL DENSITY	6.7 LBS/GAL
ICE VANES	RETRACTED

EXAMPLE:

PRESSURE ALTITUDE	26,000 FT
RANGE @ MAX CRUISE - 1800 RPM	968 NM
RANGE @ MAX RANGE - 1700 RPM	1065 NM

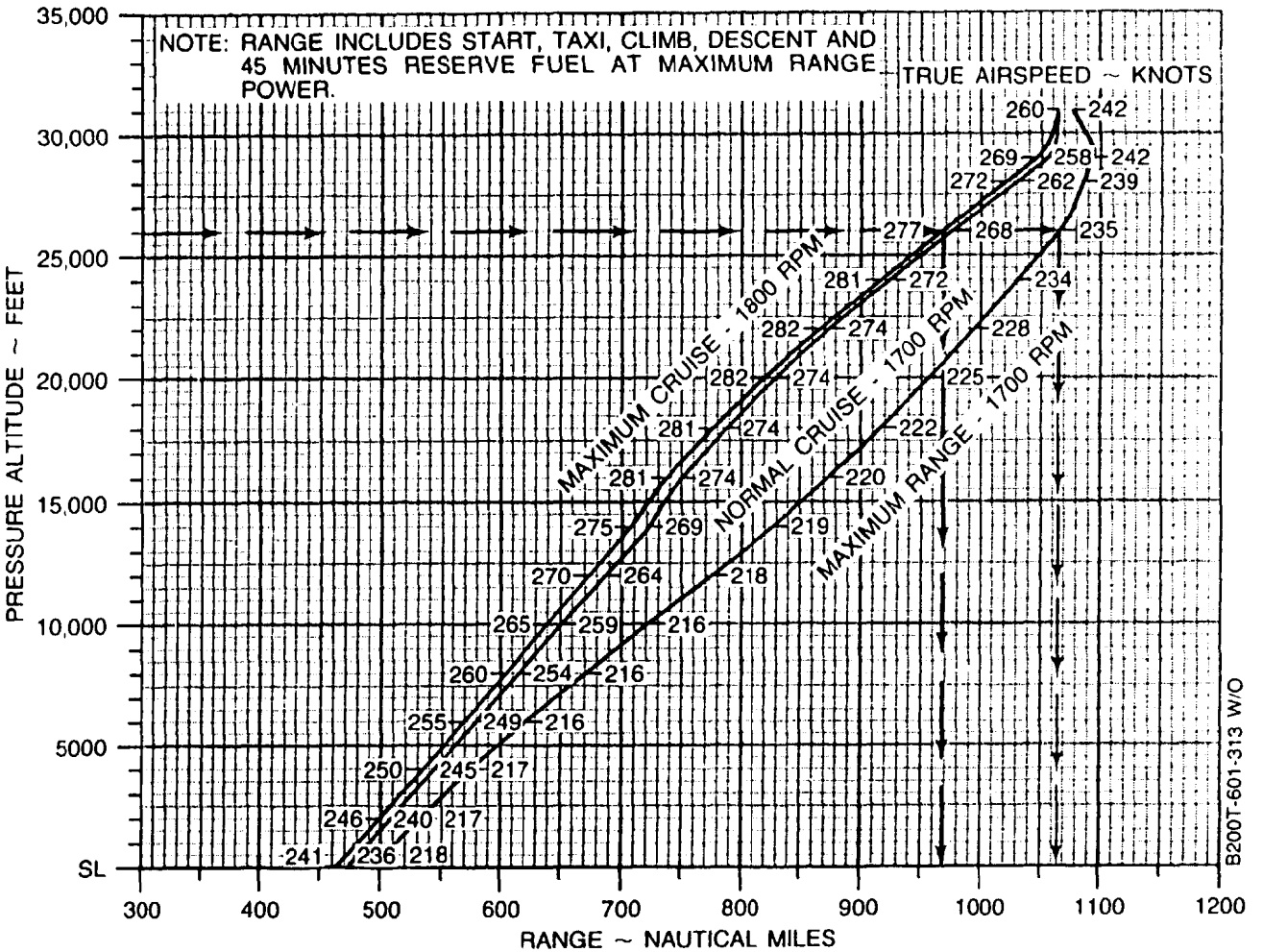

Figure 7-90. Range Profile - Full Main Tanks

ENDURANCE PROFILE - FULL MAIN TANKS

STANDARD DAY

ASSOCIATED CONDITIONS:

WEIGHT	14,090 LBS BEFORE ENGINE START
FUEL	AVIATION KEROSENE
FUEL DENSITY	6.7 LBS/GAL
ICE VANES	RETRACTED

EXAMPLE:

PRESSURE ALTITUDE	26,000 FT
RANGE @ MAX CRUISE - 1800 RPM	3.62 HRS
RANGE @ MAX RANGE - 1700 RPM	4.57 HRS

NOTE: RANGE INCLUDES START, TAXI, CLIMB, DESCENT, AND 45 MINUTES RESERVE FUEL AT MAXIMUM RANGE POWER.

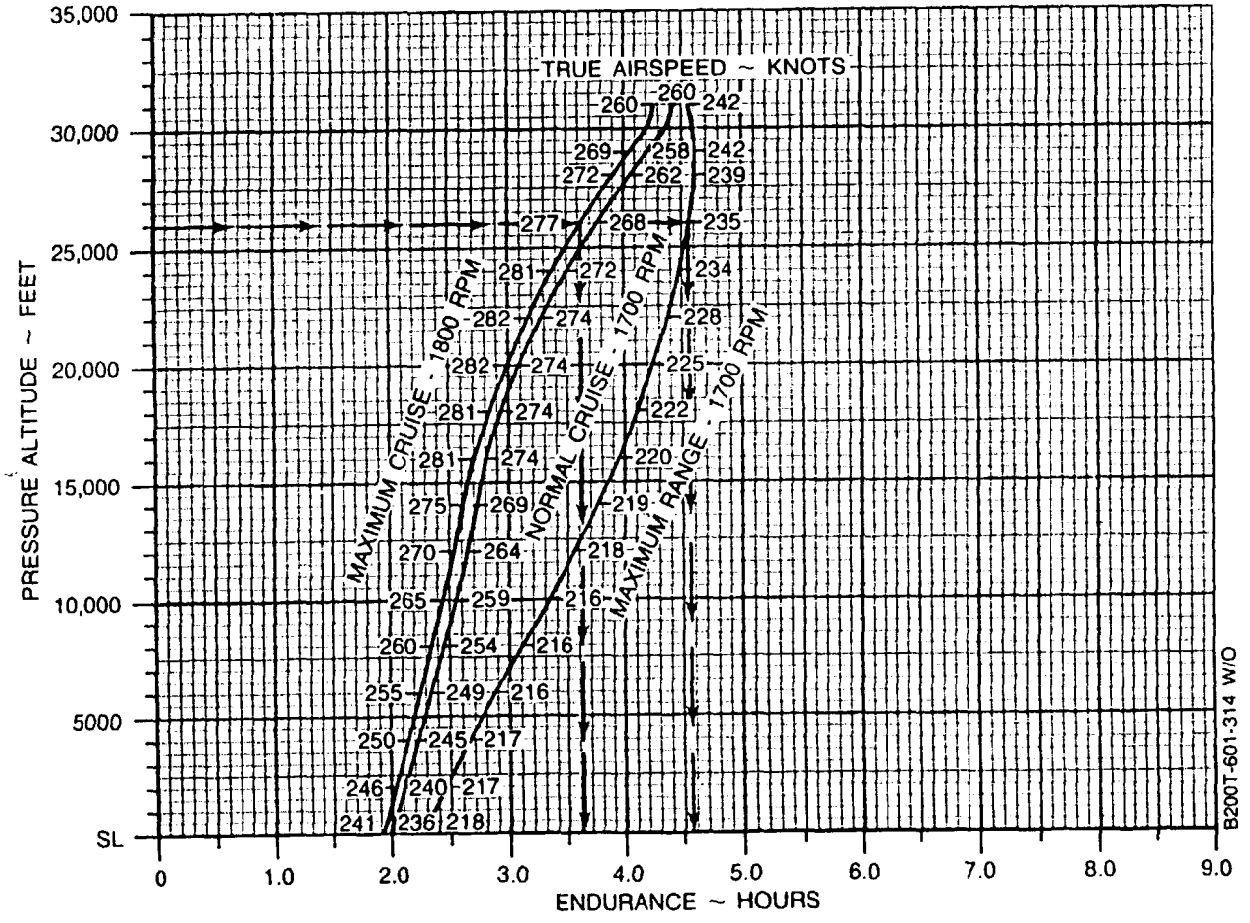

Figure 7-91. Endurance Profile - Full Main Tanks

ONE ENGINE INOPERATIVE MAXIMUM CRUISE POWER

1900 RPM

ISA - 30°C

NOTE DURING OPERATION WITH ICE VANE EXTENDED, TORQUE WILL DECREASE. IF ORIGINAL POWER IS NOT OR CANNOT BE RESET, TRUE AIRSPEED WILL DECREASE APPROXIMATELY 20 KNOTS AND FUEL FLOW WILL DECREASE APPROXIMATELY 7%. IF ORIGINAL POWER IS RESET, TRUE AIRSPEED WILL BE UNCHANGED AND FUEL FLOW WILL INCREASE APPROXIMATELY 30 LBS/HR/ENG.

NOTE: IOAT, TORQUE, AND FUEL FLOW BASED ON 12,000 POUNDS.

PRESS. ALT	IOAT	OAT	TORQUE PER ENG	FUEL FLOW PER ENG	TOTAL FUEL FLOW	AIRSPEED ~ KNOTS							
						13,000 LBS		12,000 LBS		11,000 LBS		10,000 LBS	
FEET	°C	°C	PERCENT	LBS/HR	LBS/HR	IAS	TAS	IAS	TAS	IAS	TAS	IAS	TAS
SL	-12	-15	100	517	517	189	180	191	182	193	183	194	185
2000	-16	-19	100	505	505	186	182	189	185	191	187	192	188
4000	-20	-23	100	492	492	184	185	186	188	188	190	190	192
6000	-24	-27	100	479	479	181	188	184	191	186	193	188	195
8000	-27	-31	100	467	467	179	191	182	194	184	196	186	198
10,000	-31	-35	100	455	455	176	194	179	197	182	199	184	202
12,000	-35	-39	100	445	445	174	196	177	200	179	203	181	205
14,000	-39	-43	100	439	439	171	199	174	203	177	206	179	208
16,000	-43	-47	100	434	434	167	202	171	206	174	209	176	212
18,000	-47	-51	96	415	415	160	199	165	205	169	209	172	213
20,000	---	---	---	---	---	---	---	---	---	---	---	---	---
22,000	---	---	---	---	---	---	---	---	---	---	---	---	---
24,000	---	---	---	---	---	---	---	--	---	---	---	---	---
26,000	---	---	---	---	---	---	---	---	---	---	---	---	---
28,000	---	---	---	---	---	---	---	---	---	---	---	---	---
29,000	---	---	---	---	---	---	---	---	---	---	---	---	---
31,000	---	---	---	---	---	---	---	---	---	---	---	---	---
33,000	---	---	---	---	---	---	---	---	---	---	---	---	---
35,000	---	---	---	---	---	---	---	---	---	---	---	---	---

BT05759

Figure 7-92. One Engine Inoperative Maximum Cruise Power, 1900 RPM, ISA -30°C

ONE ENGINE INOPERATIVE MAXIMUM CRUISE POWER

1900 RPM

ISA - 20°C

NOTE DURING OPERATION WITH ICE VANE EXTENDED, TORQUE WILL DECREASE. IF ORIGINAL POWER IS NOT OR CANNOT BE RESET, TRUE AIRSPEED WILL DECREASE APPROXIMATELY 20 KNOTS AND FUEL FLOW WILL DECREASE APPROXIMATELY 7%. IF ORIGINAL POWER IS RESET, TRUE AIRSPEED WILL BE UNCHANGED AND FUEL FLOW WILL INCREASE APPROXIMATELY 30 LBS/HR/ENG.

NOTE: IOAT, TORQUE, AND FUEL FLOW BASED ON 12,000 POUNDS.

PRESS. ALT	IOAT	OAT	TORQUE PER ENG	FUEL FLOW PER ENG	TOTAL FUEL FLOW	AIRSPEED ~ KNOTS							
						13,000 LBS		12,000 LBS		11,000 LBS		10,000 LBS	
FEET	°C	°C	PERCENT	LBS/HR	LBS/HR	IAS	TAS	IAS	TAS	IAS	TAS	IAS	TAS
SL	-2	-5	100	520	520	187	181	189	184	191	185	193	187
2000	-6	-9	100	505	505	185	184	187	187	189	189	191	190
4000	-10	-13	100	492	492	182	187	185	190	187	192	189	194
6000	-13	-17	100	480	480	180	190	182	193	184	195	186	197
8000	-17	-21	100	468	468	177	193	180	196	182	198	184	201
10,000	-21	-25	100	456	456	174	196	177	199	180	202	182	204
12,000	-25	-29	100	446	446	171	198	175	202	177	205	179	207
14,000	-29	-33	100	440	440	168	201	172	205	175	208	177	211
16,000	-33	-37	97	423	423	162	199	166	204	170	209	173	212
18,000	-37	-41	92	400	400	154	195	159	202	163	207	166	211
20,000	-41	-45	87	378	378	144	190	151	199	156	205	160	210
22,000	-45	-49	82	356	356	131	178	142	193	149	202	154	208
24,000	-50	-53	75	326	326	---	---	127	179	138	194	145	203
26,000	---	---	---	---	---	---	---	---	---	---	---	---	---
28,000	---	---	---	---	---	---	---	---	---	---	---	---	---
29,000	---	---	---	---	---	---	---	---	---	---	---	---	---
31,000	---	---	---	---	---	---	---	---	---	---	---	---	---
33,000	---	---	---	---	---	---	---	---	---	---	---	---	---
35,000	---	---	---	---	---	---	---	---	---	---	---	---	---

BT05760

Figure 7-93. One Engine Inoperative Maximum Cruise *Power, 1900 RPM, ISA -20°C*

ONE ENGINE INOPERATIVE MAXIMUM CRUISE POWER

1900 RPM

ISA - 10°C

NOTE DURING OPERATION WITH ICE VANE EXTENDED, TORQUE WILL DECREASE. IF ORIGINAL POWER IS NOT OR CANNOT BE RESET, TRUE AIRSPEED WILL DECREASE APPROXIMATELY 20 KNOTS AND FUEL FLOW WILL DECREASE APPROXIMATELY 7%. IF ORIGINAL POWER IS RESET, TRUE AIRSPEED WILL BE UNCHANGED AND FUEL FLOW WILL INCREASE APPROXIMATELY 30 LBS/HR/ENG.

NOTE: IOAT, TORQUE, AND FUEL FLOW BASED ON 12,000 POUNDS.

PRESS. ALT	IOAT	OAT	TORQUE PER ENG	FUEL FLOW PER ENG	TOTAL FUEL FLOW	AIRSPEED ~ KNOTS							
						13,000 LBS		12,000 LBS		11,000 LBS		10,000 LBS	
FEET	°C	°C	PERCENT	LBS/HR	LBS/HR	IAS	TAS	IAS	TAS	IAS	TAS	IAS	TAS
SL	8	5	100	522	522	185	183	188	186	190	187	191	189
2000	4	1	100	508	508	183	186	185	188	187	191	189	192
4000	0	-3	100	494	494	180	189	183	191	185	194	187	196
6000	-3	-7	100	481	481	178	192	181	195	183	197	185	199
8000	-7	-11	100	468	468	175	194	178	198	181	200	183	203
10,000	-11	-15	100	456	456	172	197	175	201	178	204	180	206
12,000	-15	-19	100	446	446	169	200	173	204	175	207	178	209
14,000	-19	-23	97	428	428	163	198	167	203	170	207	173	211
16,000	-23	-27	92	406	406	155	195	160	201	165	206	167	210
18,000	-27	-31	87	384	384	146	190	153	198	157	204	161	209
20,000	-31	-35	83	365	365	135	182	145	194	151	202	155	208
22,000	-35	-39	78	343	343	---	---	134	187	143	198	148	206
24,000	-39	-43	73	318	318	---	---	---	---	132	189	140	200
26,000	-43	-47	68	294	294	---	---	---	---	---	---	129	192
28,000	---	---	---	---	---	---	---	---	---	---	---	---	---
29,000	---	---	---	---	---	---	---	---	---	---	---	---	---
31,000	---	---	---	---	---	---	---	---	---	---	---	---	---
33,000	---	---	---	---	---	---	---	---	---	---	---	---	---
35,000	---	---	---	---	---	---	---	---	---	---	---	---	---

BT05786

Figure 7-94. One Engine Inoperative Maximum Cruise Power, 1900 RPM, ISA -10°C

ONE ENGINE INOPERATIVE MAXIMUM CRUISE POWER

1900 RPM

ISA

NOTE DURING OPERATION WITH ICE VANE EXTENDED, TORQUE WILL DECREASE. IF ORIGINAL POWER IS NOT OR CANNOT BE RESET. TRUE AIRSPEED WILL DECREASE APPROXIMATELY 20 KNOTS AND FUEL FLOW WILL DECREASE APPROXIMATELY 7%. IF ORIGINAL POWER IS RESET, TRUE AIRSPEED WILL BE UNCHANGED AND FUEL FLOW WILL INCREASE APPROXIMATELY 30 LBS/HR/ENG.

NOTE: IOAT, TORQUE, AND FUEL FLOW BASED ON 12,000 POUNDS.

PRESS. ALT	IOAT	OAT	TORQUE PER ENG	FUEL FLOW PER ENG	TOTAL FUEL FLOW	AIRSPEED ~ KNOTS							
						13,000 LBS		12,000 LBS		11,000 LBS		10,000 LBS	
FEET	°C	°C	PERCENT	LBS/HR	LBS/HR	IAS	TAS	IAS	TAS	IAS	TAS	IAS	TAS
SL	18	15	100	525	525	184	185	186	187	188	189	190	191
2000	14	11	100	511	511	181	188	184	190	186	192	188	194
4000	11	7	100	497	497	179	190	181	193	184	196	186	198
6000	7	3	100	483	483	176	193	179	196	181	199	183	201
8000	3	-1	100	469	469	173	196	176	200	179	202	181	205
10,000	-1	-5	100	457	457	170	199	174	202	176	206	179	208
12,000	-5	-9	97	436	436	165	198	169	203	172	207	174	210
14,000	-9	-13	93	412	412	157	195	162	201	166	206	169	209
16,000	-13	-17	88	390	390	148	190	154	198	159	204	163	208
18,000	-17	-21	83	369	369	138	183	146	194	152	201	156	206
20,000	-21	-25	79	351	351	119	163	137	188	145	198	150	205
22,000	-26	-29	74	329	329	- - -	- - -	123	175	136	193	143	202
24,000	-30	-33	69	305	305	- - -	- - -	- - -	- - -	123	180	133	196
26,000	- 33	-37	65	283	283	- - -	- - -	- - -	- - -	- - -	- - -	121	185
28,000	- - -	- - -	- - -	- - -	- - -	- - -	- - -	- - -	- - -	- - -	- - -	- - -	- - -
29,000	- - -	- - -	- - -	- - -	- - -	- - -	- - -	- - -	- - -	- - -	- - -	- - -	- - -
31,000	- - -	- - -	- - -	- - -	- - -	- - -	- - -	- - -	- - -	- - -	- - -	- - -	- - -
33,000	- - -	- - -	- - -	- - -	- - -	- - -	- - -	- - -	- - -	- - -	- - -	- - -	- - -
35,000	- - -	- - -	- - -	- - -	- - -	- - -	- - -	- - -	- - -	- - -	- - -	- - -	- - -

BT05761

Figure 7-95. One Engine Inoperative Maximum Cruise Power, 1900 RPM, ISA

ONE ENGINE INOPERATIVE MAXIMUM CRUISE POWER

1900 RPM

ISA + 10°C

NOTE DURING OPERATION WITH ICE VANE EXTENDED, TORQUE WILL DECREASE. IF ORIGINAL POWER IS NOT OR CANNOT BE RESET, TRUE AIRSPEED WILL DECREASE APPROXIMATELY 20 KNOTS AND FUEL FLOW **WILL DECREASE APPROXIMATELY 7%. IF ORIGINAL POWER IS RESET. TRUE AIRSPEED WILL BE** UNCHANGED AND FUEL FLOW WILL INCREASE APPROXIMATELY 30 LBS/HR/ENG.

NOTE: IOAT, TORQUE, AND FUEL FLOW BASED ON 12,000 POUNDS.

PRESS. ALT	IOAT	OAT	TORQUE PER ENG	FUEL FLOW PER ENG	TOTAL FUEL FLOW	AIRSPEED ~ KNOTS							
						13,000 LBS		12,000 LBS		11,000 LBS		10,000 LBS	
FEET	°C	°C	PERCENT	LBS/HR	LBS/HR	IAS	TAS	IAS	TAS	IAS	TAS	IAS	TAS
SL	28	25	100	527	527	182	187	185	189	187	191	189	193
2000	24	21	100	513	513	180	189	182	192	185	194	186	196
4000	21	17	100	499	499	177	192	180	195	182	198	184	200
6000	17	13	100	484	484	174	195	177	198	180	200	182	203
8000	13	9	100	470	470	171	197	174	201	177	204	179	207
10,000	9	5	95	441	441	164	195	168	199	171	203	174	207
12,000	5	1	91	415	415	157	192	161	198	165	202	168	206
14,000	1	-3	87	395	395	149	189	155	196	160	202	163	206
16,000	-3	-7	84	376	376	141	184	148	194	153	201	158	206
18,000	-7	-11	80	355	355	128	173	140	189	147	198	151	205
20,000	-12	-15	76	338	338	---	---	130	182	139	195	145	203
22,000	-15	-19	72	319	319	---	---	---	---	128	186	137	198
24,000	-19	-23	67	296	296	---	---	---	---	---	---	126	190
26,000	---	---	---	---	---	---	---	---	---	---	---	---	---
28,000	---	---	---	---	---	---	---	---	---	---	---	---	---
29,000	---	---	---	---	---	---	---	---	---	---	---	---	---
31,000	---	---	---	---	---	---	---	---	---	---	---	---	---
33,000	---	---	---	---	---	---	---	---	---	---	---	---	---
35,000	---	---	---	---	---	---	---	---	---	---	---	---	---

BT05782

Figure 7-96. One Engine Inoperative Maximum Cruise Power, *1900 RPM, ISA +10°C*

ONE ENGINE INOPERATIVE MAXIMUM CRUISE POWER

1900 RPM

ISA + 20°C

NOTE DURING OPERATION WITH ICE VANE EXTENDED, TORQUE WILL DECREASE. IF ORIGINAL POWER IS NOT OR CANNOT BE RESET, TRUE AIRSPEED WILL DECREASE APPROXIMATELY 20 KNOTS AND FUEL FLOW WILL DECREASE APPROXIMATELY 7%. IF ORIGINAL POWER IS RESET, TRUE AIRSPEED WILL BE UNCHANGED AND FUEL FLOW WILL INCREASE APPROXIMATELY 30 LBS/HR/ENG.

NOTE: IOAT, TORQUE, AND FUEL FLOW BASED ON 12,000 POUNDS.

PRESS. ALT	IOAT	OAT	TORQUE PER ENG	FUEL FLOW PER ENG	TOTAL FUEL FLOW	AIRSPEED ~ KNOTS							
						13,000 LBS		12,000 LBS		11,000 LBS		10,000 LBS	
FEET	°C	°C	PERCENT	LBS/HR	LBS/HR	IAS	TAS	IAS	TAS	IAS	TAS	IAS	TAS
SL	38	35	100	530	530	181	188	183	191	185	193	187	195
2000	35	31	100	515	515	178	191	181	194	183	196	185	198
4000	31	27	100	500	500	176	194	178	197	181	200	183	202
6000	27	23	97	475	475	170	193	173	197	176	200	178	203
8000	23	19	92	447	447	163	191	167	196	170	200	173	203
10,000	19	15	88	418	418	155	188	160	194	164	198	167	202
12,000	15	11	84	394	394	148	185	153	192	158	197	161	202
14,000	11	7	82	376	376	140	180	147	190	153	197	157	202
16,000	7	3	79	359	359	129	172	140	187	147	196	152	202
18,000	2	-1	76	343	343	- - -	- - -	132	182	141	194	146	201
20,000	-1	-5	73	327	327	- - -	- - -	- - -	- - -	133	189	140	199
22,000	-6	-9	69	307	307	- - -	- - -	- - -	- - -	120	178	132	195
24,000	-9	-13	64	285	285	- - -	- - -	- - -	- - -	- - -	- - -	120	184
26,000	- - -	- - -	- - -	- - -	- - -	- - -	- - -	- - -	- - -	- - -	- - -	- - -	- - -
28,000	- - -	- - -	- - -	- - -	- - -	- - -	- - -	- - -	- - -	- - -	- - -	- - -	- - -
29,000	- - -	- - -	- - -	- - -	- - -	- - -	- - -	- - -	- - -	- - -	- - -	- - -	- - -
31,000	- - -	- - -	- - -	- - -	- - -	- - -	- - -	- - -	- - -	- - -	- - -	- - -	- - -
33,000	- - -	- - -	- - -	- - -	- - -	- - -	- - -	- - -	- - -	- - -	- - -	- - -	- - -
35,000	- - -	- - -	- - -	- - -	- - -	- - -	- - -	- - -	- - -	- - -	- - -	- - -	- - -

BT05763

Figure 7-97. One Engine Inoperative Maximum Cruise *Power, 1900 RPM, ISA +20°C*

ONE ENGINE INOPERATIVE MAXIMUM CRUISE POWER

1900 RPM

ISA + 30°C

NOTE DURING OPERATION WITH ICE VANE EXTENDED, TORQUE WILL DECREASE. IF ORIGINAL POWER IS NOT OR CANNOT BE RESET, TRUE AIRSPEED WILL DECREASE APPROXIMATELY 20 KNOTS AND FUEL FLOW WILL DECREASE APPROXIMATELY 7%. IF ORIGINAL POWER IS RESET, TRUE AIRSPEED WILL BE UNCHANGED AND FUEL FLOW WILL INCREASE APPROXIMATELY 30 LBS/HR/ENG.

NOTE: IOAT, TORQUE, AND FUEL FLOW BASED ON 12,000 POUNDS.

PRESS. ALT	IOAT	OAT	TORQUE PER ENG	FUEL FLOW PER ENG	TOTAL FUEL FLOW	AIRSPEED ~ KNOTS							
						13,000 LBS		12,000 LBS		11,000 LBS		10,000 LBS	
FEET	°C	°C	PERCENT	LBS/HR	LBS/HR	IAS	TAS	IAS	TAS	IAS	TAS	IAS	TAS
SL	48	45	97	521	521	176	186	179	189	182	192	184	194
2000	44	41	94	499	499	172	187	175	190	178	193	180	196
4000	40	37	92	478	478	167	188	171	192	174	195	177	198
6000	37	33	90	453	453	162	187	166	192	169	195	172	199
8000	33	29	86	425	425	154	184	159	190	163	194	166	198
10,000	28	25	82	397	397	146	180	152	187	157	193	160	198
12,000	24	21	78	375	375	137	175	145	185	151	192	155	197
14,000	20	17	76	358	358	126	166	138	182	145	191	150	197
16,000	16	13	73	342	342	---	---	130	177	139	189	145	197
18,000	13	9	72	329	329	---	---	---	---	133	187	140	196
20,000	8	5	70	316	316	---	---	---	---	125	181	134	195
22,000	5	1	66	297	297	---	---	---	---	---	---	125	189
24,000	---	---	---	---	---	---	---	---	---	---	---	---	---
26,000	---	---	---	---	---	---	---	---	---	---	---	---	---
28,000	---	---	---	---	---	---	---	---	---	---	---	---	---
29,000	---	---	---	---	---	---	---	---	---	---	---	---	---
31,000	---	---	---	---	---	---	---	---	---	---	---	---	---
33,000	---	---	---	---	---	---	---	---	---	---	---	---	---
35,000	---	---	---	---	---	---	---	---	---	---	---	---	---

BT05784

Figure 7-98. One Engine Inoperative Maximum Cruise Power, 1900 RPM, ISA +30°C

ONE ENGINE INOPERATIVE MAXIMUM CRUISE POWER

1900 RPM

ISA + 37°C

NOTE DURING OPERATION WITH ICE VANE EXTENDED, TORQUE WILL DECREASE. IF ORIGINAL POWER IS NOT OR CANNOT BE RESET, TRUE AIRSPEED WILL DECREASE APPROXIMATELY 20 KNOTS AND FUEL FLOW WILL DECREASE APPROXIMATELY 7%. IF ORIGINAL POWER IS RESET, TRUE AIRSPEED WILL BE UNCHANGED AND FUEL FLOW WILL INCREASE APPROXIMATELY 30 LBS/HR/ENG.

NOTE: IOAT, TORQUE, AND FUEL FLOW BASED ON 12,000 POUNDS.

PRESS. ALT	IOAT	OAT	TORQUE PER ENG	FUEL FLOW PER ENG	TOTAL FUEL FLOW	AIRSPEED ~ KNOTS							
						13,000 LBS		12,000 LBS		11,000 LBS		10,000 LBS	
FEET	°C	°C	PERCENT	LBS/HR	LBS/HR	IAS	TAS	IAS	TAS	IAS	TAS	IAS	TAS
SL	55	52	90	503	503	170	181	173	185	176	188	178	190
2000	51	48	88	481	481	165	182	169	186	172	189	174	192
4000	47	44	87	461	461	161	182	165	187	168	191	171	194
6000	43	40	84	438	438	155	181	160	187	163	190	167	195
8000	39	36	81	411	411	147	178	153	185	158	190	161	194
10,000	35	32	77	384	384	138	172	146	182	151	189	156	194
12,000	31	28	74	363	363	127	164	139	179	145	187	150	193
14,000	27	24	72	346	346	- - -	- - -	131	175	140	186	145	193
16,000	23	20	70	331	331	- - -	- - -	120	166	133	183	140	192
18,000	19	16	68	318	318	- - -	- - -	- - -	- - -	126	179	135	191
20,000	16	12	67	306	306	- - -	- - -	- - -	- - -	- - -	- - -	129	189
22,000	12	8	63	289	289	- - -	- - -	- - -	- - -	- - -	- - -	120	182
24,000	- - -	- - -	- - -	- - -	- - -	- - -	- - -	- - -	- - -	- - -	- - -	- - -	- - -
26,000	- - -	- - -	- - -	- - -	- - -	- - -	- - -	- - -	- - -	- - -	- - -	- - -	- - -
28,000	- - -	- - -	- - -	- - -	- - -	- - -	- - -	- - -	- - -	- - -	- - -	- - -	- - -
29,000	- - -	- - -	- - -	- - -	- - -	- - -	- - -	- - -	- - -	- - -	- - -	- - -	- - -
31,000	- - -	- - -	- - -	- - -	- - -	- - -	- - -	- - -	- - -	- - -	- - -	- - -	- - -
33,000	- - -	- - -	- - -	- - -	- - -	- - -	- - -	- - -	- - -	- - -	- - -	- - -	- - -
35,000	- - -	- - -	- - -	- - -	- - -	- - -	- - -	- - -	- - -	- - -	- - -	- - -	- - -

BT05785

Figure 7-99. One Engine Inoperative Maximum Cruise Power, 1900 RPM, ISA +37°C

PRESSURIZATION CONTROLLER SETTING FOR LANDING

EXAMPLE

ALTIMETER SETTING. . . . . 29.52 IN. HG
LANDING FIELD ELEVATION . . . 2000 FT
CABIN ALTITUDE SETTING . . . . 2885 FT

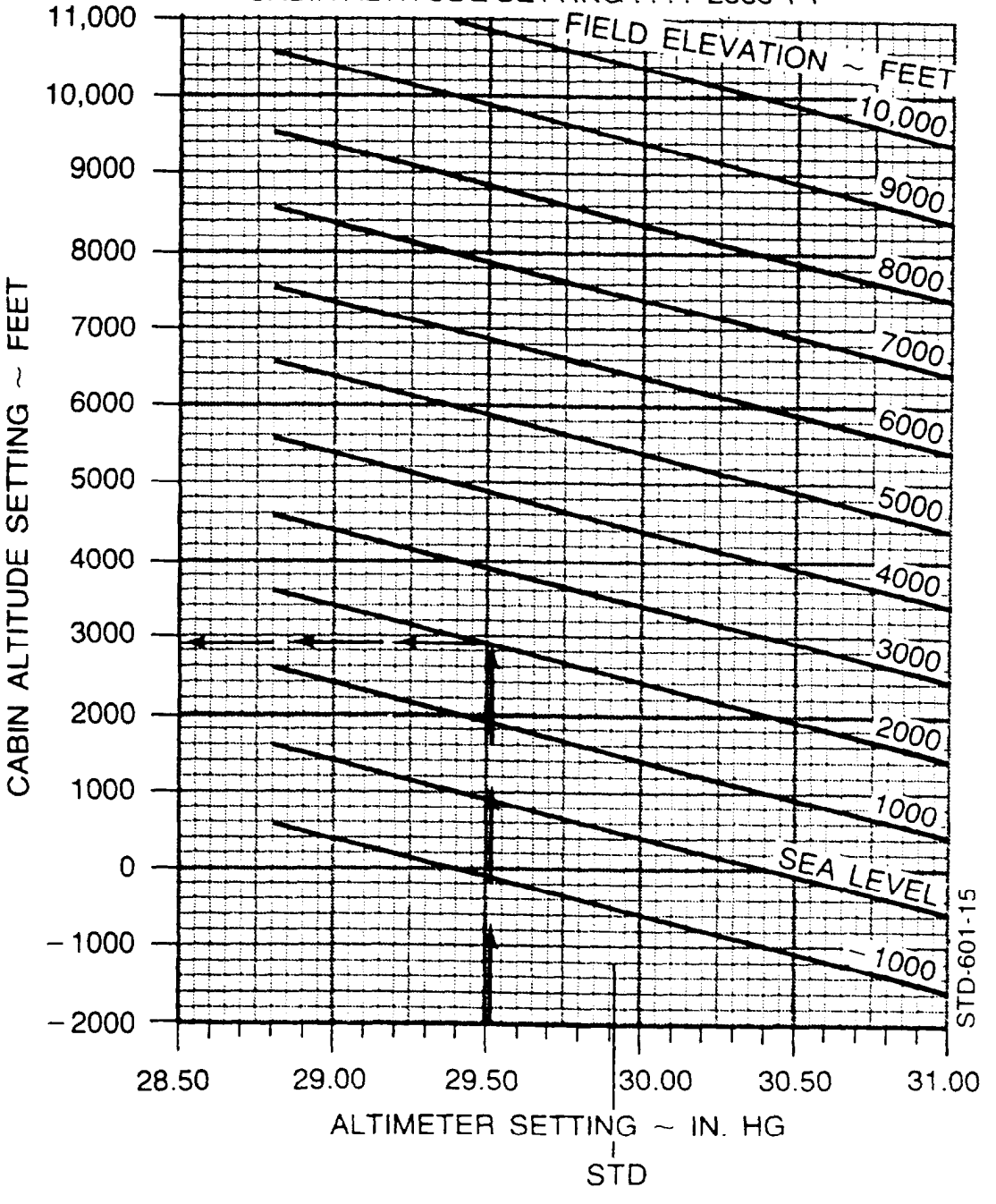

Figure 7-100. Pressurization Controller Setting for Landing

HOLDING TIME

POWER SETTING
36% AT 1700 RPM

APPLICABLE FOR ALL TEMPERATURES

NOTE: FOR OPERATION WITH ICE VANES EXTENDED, HOLDING TIME WILL BE REDUCED APPROXIMATELY 15%.

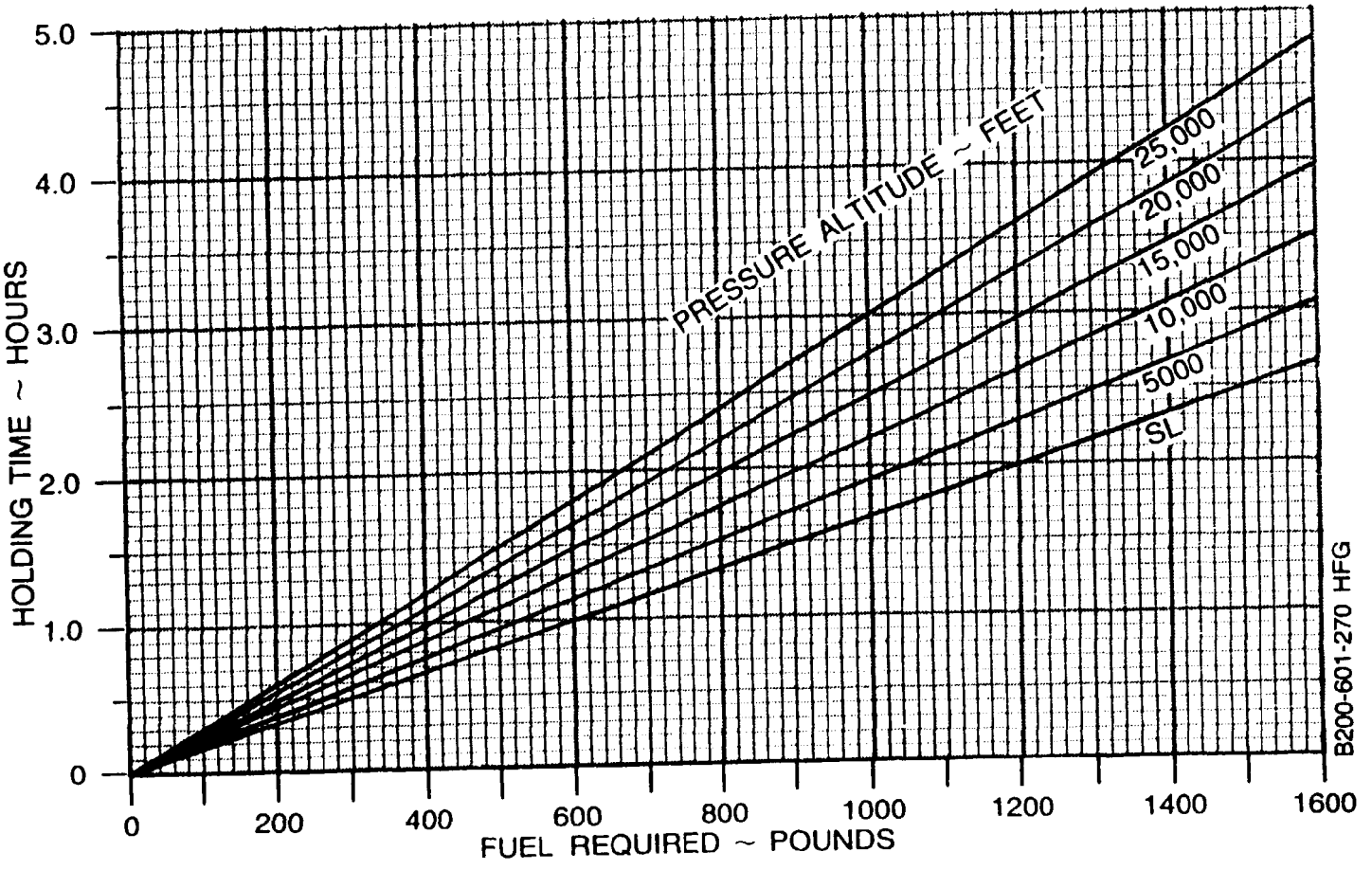

Figure 7-101. Holding Time

TIME, FUEL, AND DISTANCE TO DESCEND

ASSOCIATED CONDITIONS:

POWER	AS REQUIRED TO DESCEND AT 1500 FT/MIN
GEAR	UP
FLAPS	UP

EXAMPLE:

INITIAL ALTITUDE	26,000 FT
FINAL ALTITUDE	4732 FT
TIME TO DESCEND (17-3)	14 MIN
FUEL TO DESCEND (148-34)	114 LBS
DISTANCE TO DESCEND (78-13)	65 NM

DESCENT SPEED: M_{MO} OR 250 KNOTS, WHICHEVER IS LESS.

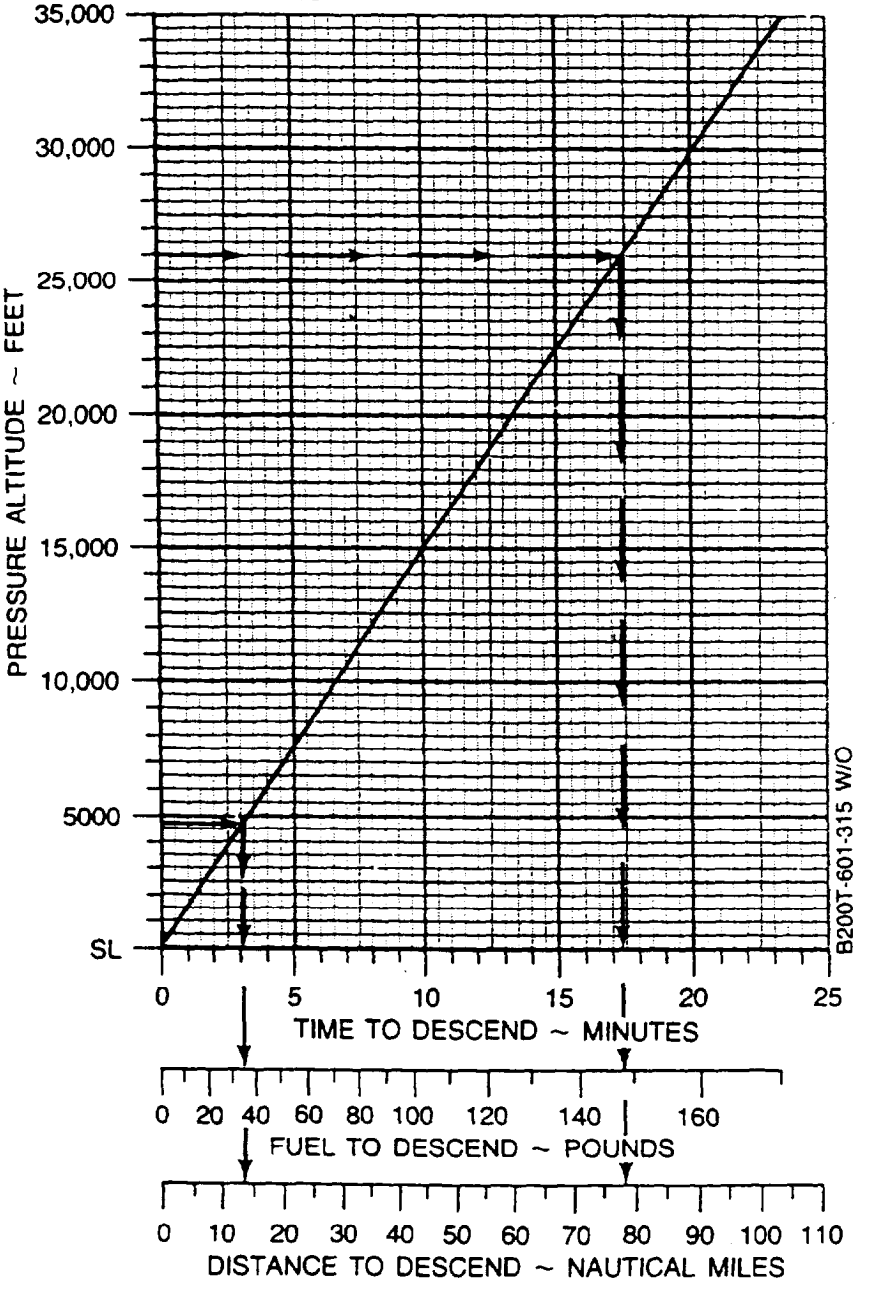

Figure 7-102. Time, Fuel, and Distance to Descend

CLIMB-BALKED LANDING

CLIMB SPEED 100 KNOTS (ALL WEIGHTS)

ASSOCIATED CONDITIONS:

POWER ..... TAKE-OFF
FLAPS ..... DOWN
LANDING GEAR ..... DOWN

EXAMPLE:

OAT ..... 32°C
PRESSURE ALTITUDE ..... 4732 FT
WEIGHT ..... 10,854 LBS

RATE-OF-CLIMB ..... 1420 FT/MIN
CLIMB GRADIENT 14.4%

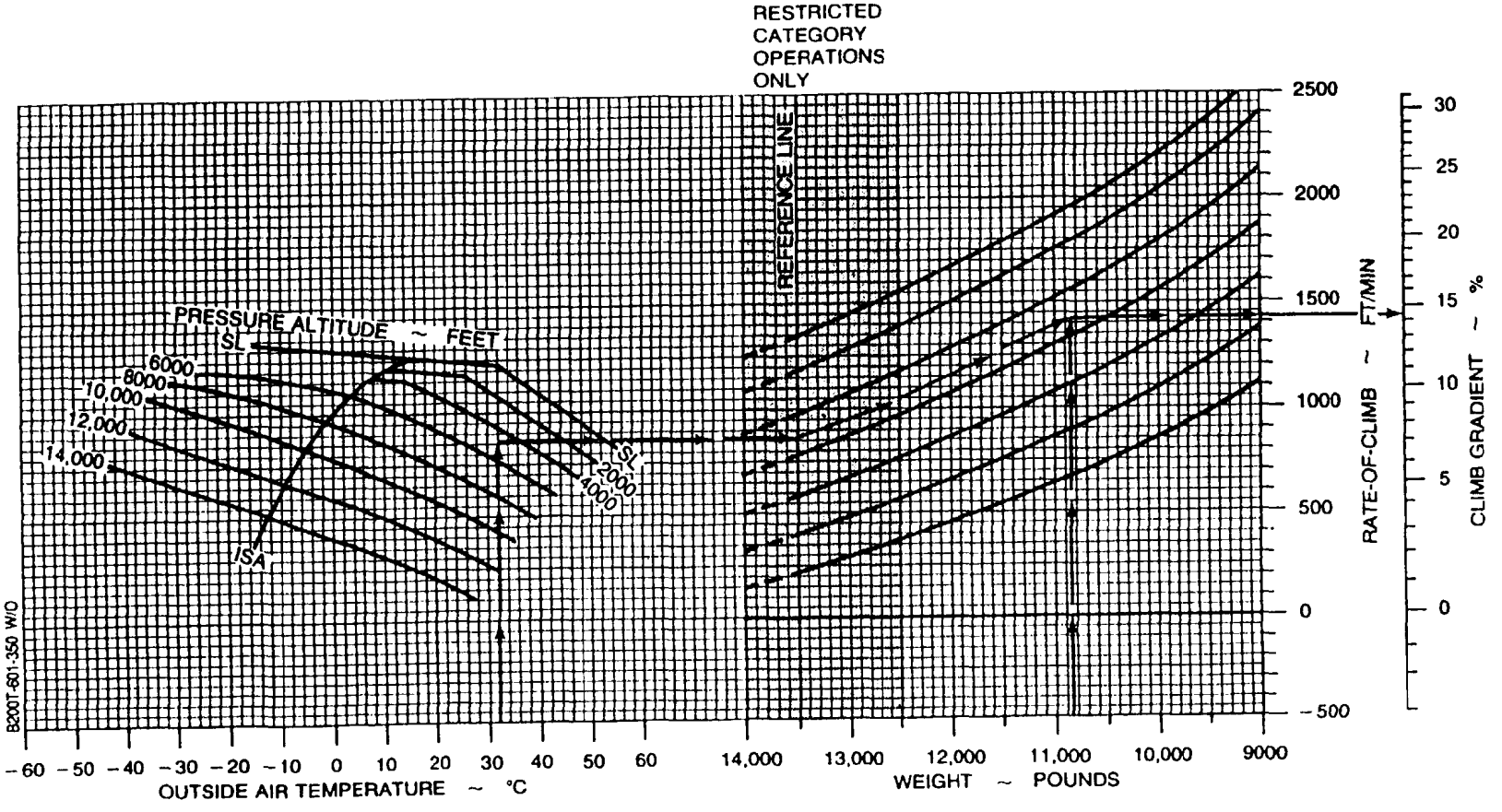

Figure 7-103. Climb - Balked Landing

NORMAL LANDING DISTANCE WITHOUT PROPELLER REVERSING - FLAPS DOWN

ASSOCIATED CONDITIONS:

POWER.....RETARDED TO MAINTAIN 800 FT/MIN ON FINAL APPROACH
FLAPS.....DOWN
RUNWAY.....PAVED LEVEL DRY SURFACE
APPROACH SPEED.IAS AS TABULATED
BRAKING .....MAXIMUM

WEIGHT ~ POUNDS	APPROACH SPEED ~ KNOTS
14,000	106
13,500	105
13,000	104
12,500	102
12,000	101
11,000	99
10,000	96
9000	94

EXAMPLE:

OAT..... 32°C
PRESSURE ALTITUDE..... 4732 FT
LANDING WEIGHT..... 10,854 LBS
HEADWIND COMPONENT..... 4.7 KTS

GROUND ROLL ..... 1850 FT
TOTAL OVER
50 FT OBSTACLE..... 3000 FT
APPROACH SPEED..... 99 KTS

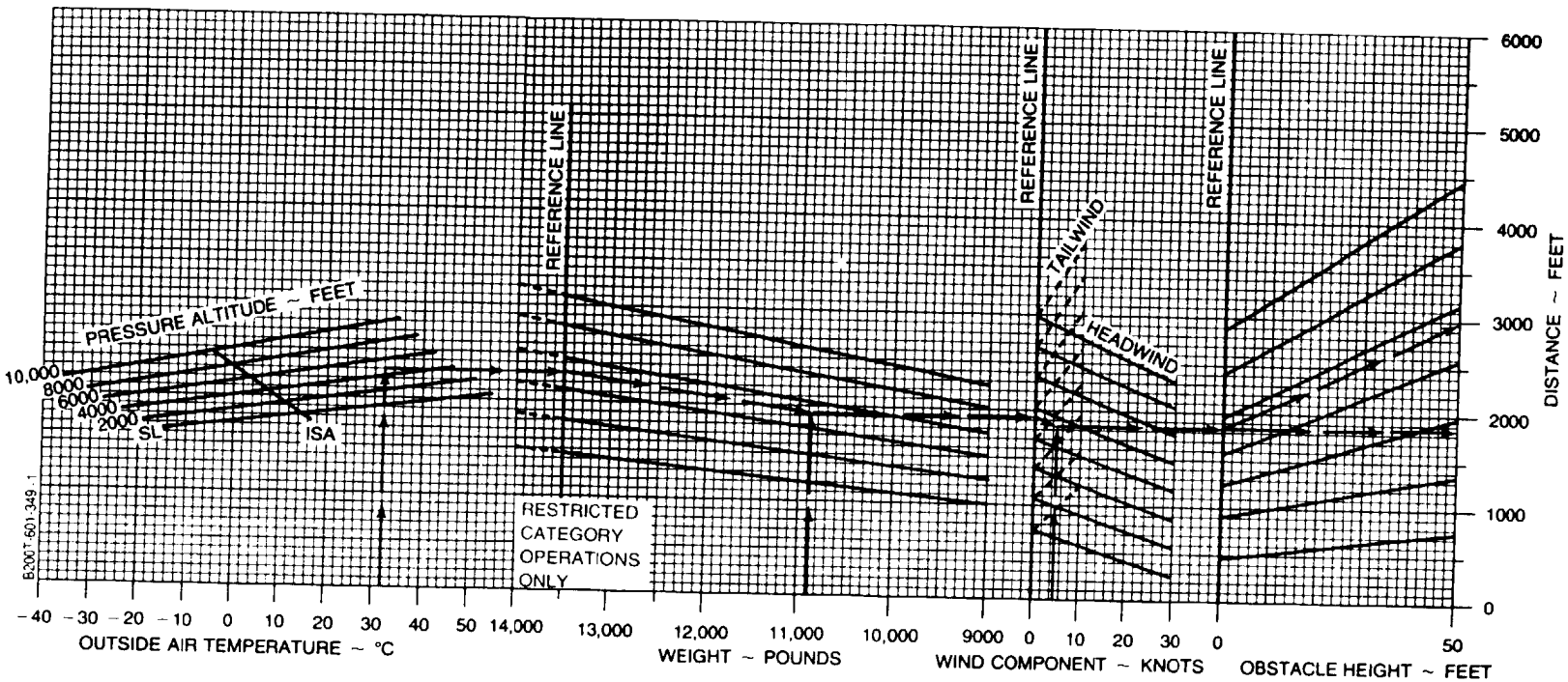

Figure 7-104. Normal Landing Distance Without Propeller Reversing, Flaps DOWN

LANDING DISTANCE WITHOUT PROPELLER REVERSING - FLAPS UP

ASSOCIATED CONDITIONS:

POWER..... RETARDED TO MAINTAIN 900 FT/MIN ON FINAL APPROACH
FLAPS..... UP
RUNWAY..... PAVED, LEVEL, DRY SURFACE
APPROACH SPEED . IAS AS TABULATED
BRAKING ..... MAXIMUM

WEIGHT ~ POUNDS	APPROACH SPEED ~ KNOTS
14,000	137
13,500	135
13,000	133
12,500	131
12,000	129
11,000	125
10,000	121
9000	117

EXAMPLE:

FLAPS DOWN LANDING DISTANCE
OVER 50 FT OBSTACLE ..... 3000 FT
LANDING WEIGHT ..... 10,854 LBS

FLAPS UP LANDING DISTANCE
OVER 50 FT OBSTACLE ..... 4150 FT
APPROACH SPEED ..... 124 KTS

NOTES:
1. LANDING WITH FLAPS FULL DOWN IS NORMAL PROCEDURE. USE THIS GRAPH WHEN IT IS NECESSARY TO LAND WITH FLAPS UP.
2. TO DETERMINE FLAPS-UP LANDING DISTANCE, READ FROM THE **NORMAL LANDING DISTANCE WITHOUT PROPELLER REVERSING-FLAPS** DOWN GRAPH THE LANDING DISTANCE APPROPRIATE TO OAT, ALTITUDE, WEIGHT, WIND, AND 50-FT OBSTACLE. THEN ENTER THIS GRAPH WITH THE DERIVED VALUE AND READ THE FLAPS-UP LANDING DISTANCE.

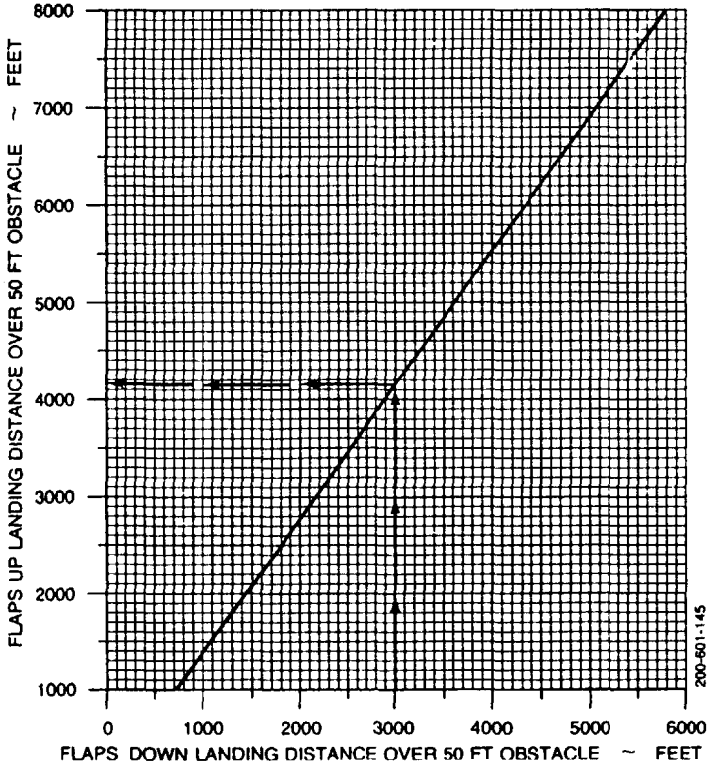

Figure 7-105 Landing Distance Without Propeller Reversing, Flaps UP

LANDING DISTANCE WITH PROPELLER REVERSING - FLAPS DOWN

ASSOCIATED CONDITIONS:

POWER	RETARD TO MAINTAIN 1000 FT/MIN. ON FINAL APPROACH
FLAPS	DOWN
RUNWAY	PAVED, LEVEL, DRY SURFACE
APPROACH SPEED	IAS AS TABULATED
BRAKING	MAXIMUM
CONDITION LEVERS	HIGH IDLE
PROPELLER CONTROLS	FULL FORWARD
POWER LEVERS	MAXIMUM REVERSE AFTER TOUCHDOWN

WEIGHT ~ POUNDS	APPROACH SPEED ~ KNOTS
14,000	106
13,500	105
13,000	104
12,500	102
12,000	101
11,000	99
10,000	96
9000	94

EXAMPLE:

OAT	32°C
PRESSURE ALTITUDE	4732 FT
LANDING WEIGHT	10,854 LBS
HEADWIND COMPONENT	4.7 KTS
GROUND ROLL	1100 FT
TOTAL OVER 50 FT OBSTACLE	2225 FT
APPROACH SPEED	98 KTS

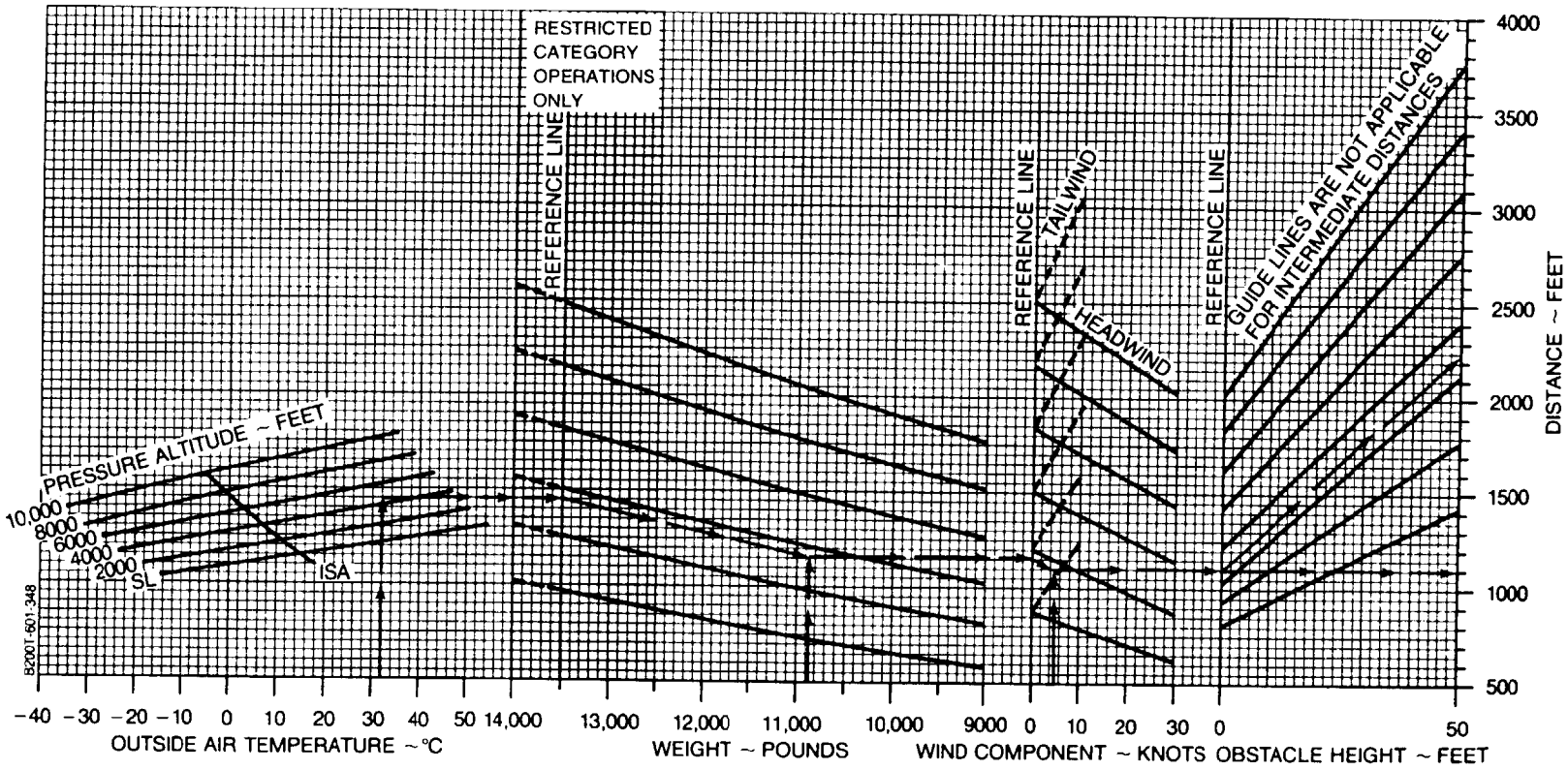

Figure 7-106. Landing Distance With Propeller Reversing, Flaps DOWN

LANDING DISTANCE WITH PROPELLER REVERSING - FLAPS UP

ASSOCIATED CONDITIONS:

POWER	RETARD TO MAINTAIN 1000 FT/MIN ON FINAL APPROACH
FLAPS	UP
RUNWAY	PAVED, LEVEL, DRY SURFACE
APPROACH SPEED	IAS AS TABULATED
BRAKING	MAXIMUM
CONDITION LEVERS	HIGH IDLE
PROPELLER CONTROLS	FULL FORWARD
POWER LEVERS	MAXIMUM REVERSE AFTER TOUCHDOWN

WEIGHT ~ POUNDS	APPROACH SPEED ~ KNOTS
14,000	137
13,500	135
13,000	133
12,500	131
12,000	129
11,000	125
10,000	121
9000	117

EXAMPLE:

FLAPS DOWN LANDING DISTANCE OVER 50 FOOT OBSTACLE ..... 2260 FT
LANDING WEIGHT ..... 10,854 LBS

FLAPS UP LANDING DISTANCE OVER 50 FOOT OBSTACLE ..... 2720 FT
APPROACH SPEED ..... 124 KTS

NOTES:
1. LANDING WITH FLAPS FULL DOWN IS NORMAL PROCEDURE. USE THIS GRAPH WHEN IT IS NECESSARY TO LAND WITH FLAPS UP.
2. TO DETERMINE FLAPS-UP LANDING DISTANCE, READ FROM THE **LANDING DISTANCE WITH PROPELLER REVERSING – FLAPS DOWN** GRAPH THE LANDING DISTANCE APPROPRIATE TO OAT, ALTITUDE, WEIGHT, WIND, AND 50-FT OBSTACLE. THEN ENTER THIS GRAPH WITH THE DERIVED VALUE AND READ THE FLAPS-UP LANDING DISTANCE.

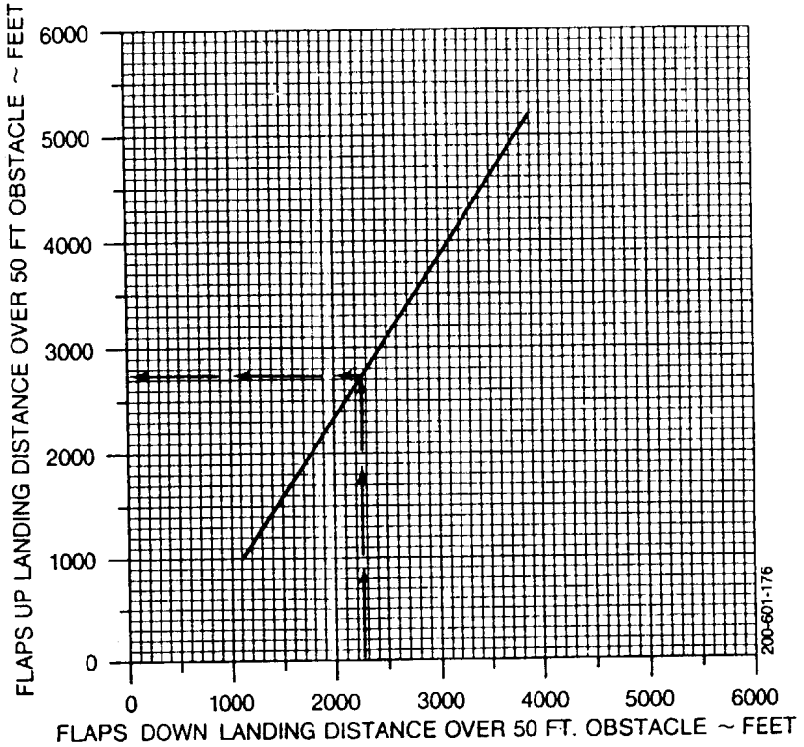

Figure 7-107. Landing Distance With Propeller Reversing, Flaps UP

CHAPTER 8
NORMAL PROCEDURES

Section I. MISSION PLANNING

8-1. MISSION PLANNING.

Mission planning begins when the mission is assigned and extends to the preflight check of the aircraft. It includes, but is not limited to, checks of operating limits and restrictions; weight/balance and loading; performance; publications; flight plan; and crew/passenger briefings.

8-2. OPERATING LIMITS AND RESTRICTIONS.

The minimum, maximum, normal, and cautionary operational ranges represent careful aerodynamic and structural calculations, substantiated by flight test data. These limitations must be adhered to during all phases of the mission. Refer to Chapter 5, OPERATING LIMITS AND RESTRICTIONS, for detailed information.

8-3. WEIGHT, BALANCE, AND LOADING.

The aircraft must be loaded, cargo and passengers secured, and weight and balance verified per Chapter 6, WEIGHT/BALANCE, AND LOADING.

8-4. PERFORMANCE.

Refer to Chapter 7, PERFORMANCE DATA, to determine the capability of the aircraft for the entire mission. Consideration must be given to changes in performance resulting from variation in loads, temperatures, and pressure altitudes.

8-5. FLIGHT PLAN.

A flight plan must be completed and filed per AR 95-1, DOD FLIP, and local regulations.

8-6. CREW AND PASSENGER BRIEFINGS.

A crew/passenger briefing must be conducted for a thorough understanding of individual and team responsibilities. The briefing should include, but not be limited to, copilot and ground crew responsibilities and the coordination necessary to complete the mission most efficiently. A review of visual signals is desirable when ground guides do not have a direct voice communications link with the crew. Refer to Section VI for crew and passenger briefings.

Section II. OPERATING PROCEDURES AND MANEUVERS

8-7. OPERATING PROCEDURES AND MANEUVERS.

This section deals with normal procedures and includes all steps necessary for safe and efficient operation of the aircraft from the time a preflight begins until the flight is completed and the aircraft is parked and secured. Unique feel, characteristics, and reaction of the aircraft during various phases of operation and the techniques and procedures used for taxiing, takeoff, climb, etc., are described, including precautions to be observed. Only the duties of the minimum crew necessary for the actual operation of the aircraft are included.

8-8. ADDITIONAL DATA.

Procedures specifically related to instrument flight that are different from normal procedures are covered in this section following normal procedures. Descriptions of functions, operations, and effects of controls are covered in Section IV, FLIGHT CHARACTERISTICS, and are repeated in this section only when required for emphasis. Checks that must be made under adverse environmental conditions, such as desert and cold weather operations, supplement normal procedures checks in this section and are covered in Section V, ADVERSE ENVIRONMENTAL CONDITIONS. Additional crew duties are covered as necessary in Section VI, CREW DUTIES.

8-9. CHECKLIST.

Normal procedures are given primarily in checklist form and are amplified as necessary in accompanying paragraph form when a detailed description of a procedure or maneuver is required. A condensed version of the amplified checklist, omitting all explanatory text, is contained in the Operator's and Crewmember's Checklist, TM 1-1510-225 CL. To provide for easier cross referencing, the procedural steps in the checklist are numbered to coincide with the correspondingly numbered steps in this manual.

8-10. USE OF CHECKLIST.

Although a good working knowledge of all aircraft procedures is desirable, it is not mandatory that they be committed to memory. The pilot is responsible for the initiation and accomplishment of all required checks. Checklist items will be called out orally and the action verified using the checklist (-CL). Normally, the copilot will read the checklist and perform such duties as indicated, as well as those directed by the pilot. "As required" will not be used as a response; instead the actual position or setting of the unit

or item, such as **"ON"** or **"UP"** or **"APPROACH"** will be stated. Upon completion of each checklist, the crewmember reading the checklist will announce "CHECKLIST COMPLETE."

8-11. CHECKS.

Items which apply only to night or only to instrument flying shall have an "N" or "I" respectively, immediately preceding the check. The symbol "O" shall be used to indicate "if installed." Those duties which are the responsibility of the copilot, will be indicated by a circle around the step number, i.e., (4) Circuit breakers - In. The star symbol "★" indicates an operational check contained in the performance section of the condensed checklist. The asterisk symbol "*" indicates that performance of the step is mandatory for all thru-flights. The asterisk applies only to checks performed prior to takeoff. Placarded items such as switch and control positions appear in boldface capital letters.

8-12. BEFORE EXTERIOR CHECK

*1. Forms/Publications - Check DA Forms 2408-12, -13, -14, and -18, DD Form 365-4, locally required forms and publications, and availability of operator's manual (-10) and checklist (-CL).

2. Toilet - Check.

3. Emergency equipment - Check that all required emergency equipment is available and that fire extinguishers and first aid kits have current inspection date.

a. Survival kits(s).

b. First aid kits (3).

c. Baggage compartment fire extinguisher.

O d. Overhead emergency lighting (forward and aft).

e. Emergency exit.

f. Cockpit fire extinguisher.

*4. **LDG GEAR CONTROL - DN.**

*5. Manual gear extension handle - Down and latched.

*6. Parking brake - Set,

7. Flight controls - Check.

8. Manual trim - Check and set to zero.

*9. **IGNITION AND ENGINE START** switches - **OFF.**

*10. Circuit breakers - Check in.

11. **BATT** switch - **ON (L** and **R FUEL PRESS, L** & **R ENG ANTI-ICE** annunciators illuminated).

O 12. Battery temperature indicator - **TEST.** 120°, yellow light on; 150°, red light on.

13. Exterior lights and heat - Check.

a. Navigation, recognition, beacons, strobes, door entry light, logo light, landing, and taxi lights - Check *ON,* then **OFF.**

b. Pitot (2), stall warning, and fuel vent heat (2) - Check on, then **OFF.**

14. Cabin door annunciator light - Check On.

★15. Fuel system - Check.

a. Fuel **FIREWALL SHUTOFF VALVES - CLOSE.**

b. **STANDBY PUMPS - ON.**

c. **L and R FUEL PRESS** annunciators - Illuminated.

d. Fuel **FIREWALL SHUTOFF VALVES - OPEN.**

e. **L** and **R FUEL PRESS** annunciators - Extinguished.

f. **STANDBY PUMPS - OFF.**

g. **L** and **R FUEL PRESS** annunciators - Illuminated.

h. **CROSSFEED FLOW** alternately **LEFT** and **RIGHT (FUEL CROSSFEED** annunciator illuminated, **L** and **R FUEL PRESS** annunciators extinguished).

i. **CROSSFEED FLOW - OFF.**

j. Auxiliary fuel transfer - **AUTO.**

O k. **NO TRANSFER** lights - **TEST.**

1. Fuel quantity - Check.

★ 16. **Oxygen system -** Check.

a. Passenger manual drop-out - Push Off.

b. Oxygen system - Crew ready.

c. Crew masks - **100%;** check operation and stow.

d. Oxygen duration - Determine.

NOTE

1850 PSI at 15° is a fully charged bottle. Read duration directly from Table 8-1.

(I) Read oxygen pressure from the gage.

(2) Read the OAT (with battery on).

(3) Determine the percent of usable capacity from Figure 8-1 (eg. 1100 PSI at 0°C = 57%).

(4) Compute the oxygen duration in minutes from Table 8-1 by multiplying the full bottle duration by the percent of usable capacity, as in the following example:

NOTE

For oxygen duration computations, count each diluter-demand crew mask in use as 2 (e.g., with 4 passengers and a crew of 2, enter the table at 8 people using).

(a) Pilot and copilot with masks set at 100% plus 6 passengers = 10 people using oxygen.

(b) Cylinder volume = 115 cubic feet.

(c) Duration with full bottle = 73 minutes.

(d) Duration with 57% capacity: .57 x 73 = 41 minutes.

17. Annunciator lights - Check.

18. Hydraulic fluid sensor - Check.

19. Fire detection system - Check.

O 20. Fire extinguishers - **TEST.**

21. Stall and landing gear warning - Check.

22. **BATT** switch - **OFF.**

O 23. **EFIS AUX POWER** - Test.

a. Test switch - Hold to TEST for 5 seconds (green TEST annunciator will illuminate for **5** seconds).

Table 8-1. Oxygen Duration.

OXYGEN DURATION WITH FULL BOTTLE (100% CAPACITY)									
STATED CYLINDER SIZE(CUFT)	**NUMBER OF PEOPLE USING								
	1	2	3	4	5	6	7	8	9
	DURATION IN MINUTES								
22	144	72	48	36	26	24	20	18	16
50	317	158	105	79	63	52	45	39	35
77	488	244	182	122	97	81	69	61	54
115	732	366	244	183	146	122	104	91	81
STATED CYLINDER-SIZE(CU FT)	**NUMBER OF PEOPLE USNG								
	10	11	12	13	14	15	**16	**17	
	DURATION IN MINUTES								
22	14	13	12	11	10	*	*	*	
50	31	28	26	24	22	21	19	18	
77	48	44	40	37	34	32	30	28	
115	73	66	61	56	52	48	45	43	

* Will not meet oxygen requirements.

** For oxygen duration computations, count each diluter-demand crew mask in use as 2 (e.g. with 4 passengers and a crew of 2, enter the table at 8 people using).

BT05484

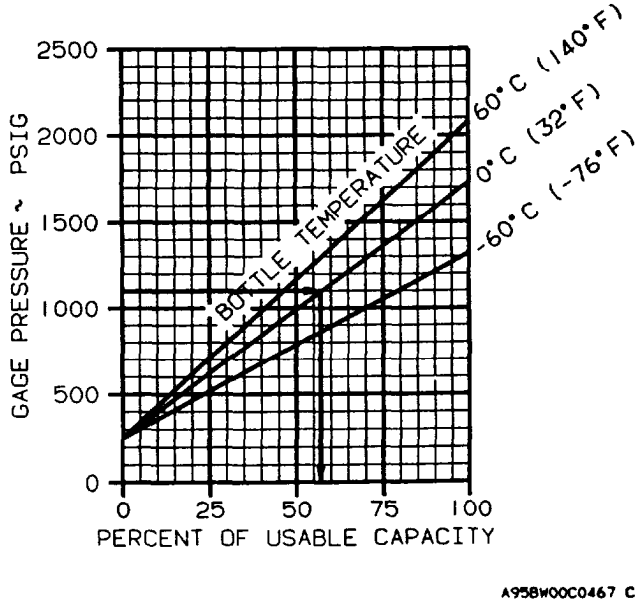

Figure 8-1. Percent of Usable Capacity

b. Test switch - Release.

O 24. Standby horizon - Test.

8-13. FUEL SAMPLE AND OIL CHECK

NOTE

Fuel and oil quantity checks may be performed prior to Exterior Check to preclude carrying a ladder and fuel sample container during the balance of the preflight. During warm weather, open fuel caps slowly to prevent being sprayed by fuel under pressure.

A cold oil check is unreliable. Oil should be checked within 10 minutes after stopping engine. If more than 10 minutes have elapsed, motor engine for 40 seconds, then recheck. If more than 10 hours have elapsed, run engine for 2 minutes, then recheck. Add oil as required. Do not overfill.

*1. Fuel sample - Check collective fuel sample from all drains for possible contamination. (Refer to Chapter 2 for locations.)

8-14. LEFT WING, AREA 1.

1. Left wing area - Check as follows (fig. 8-2):

*a. General condition - Check for skin damage such as buckling, splitting, distortion, dents, or fuel leaks.

b. Flaps - Check for full extension (approximately 1/4 inch play) and skin damage, such as buckling, splitting, distortion or dents.

c. Fuel sump drains - Check for leaks.

d. Ailerons and trim tab - Check security and trim tab rig.

e. Static wicks - Check security and condition.

f. Wing tip and position lights - Check condition and for cracked lens,

O g. Recognition/strobe light - Check condition.

h. Outboard wing fuel vent - Check free of obstruction.

*i. Main tank fuel and cap - Check fuel level, condition of seal, cap tight and properly installed. Locking tab aft.

j. Outboard deice boot - Check for secure bonding, cracks, loose patches, stall strip, and general condition.

k. Stall warning vane - Check free.

*1. Tiedown - Released.

m. Wing ice light - Check condition.

n. Recessed and heated fuel vents - Check free of obstructions.

2. Left main landing gear - Check as follows (fig. 8-2):

*a. Tires - Check for cuts, bruises, wear, appearance of proper inflation, wheel condition, and that both tires have the same tread design.

b. Brake assembly - Check brake lines for damage or signs of leakage, and brake linings for wear. Also check the brake deice assembly and bleed air hose for condition and security.

*c. Shock strut - Check for signs of leakage, minimum strut extension (5.5 inches high flotation gear, 4 inches standard gear), and left and right extension is approximately equal.

d. Torque knee - Check condition.

e. Safety switch - Check condition, wire, and security.

O f. Fire extinguisher pressure - Check within limits (Chapter 2).

g. Wheel well, doors, and linkage - Check for signs of leakage, broken wires, security, and general condition.

h. Fuel sump drains - Check for leaks.

3. Left engine and propeller - Check as follows (fig. 8-2):

CAUTION

A cold oil check is unreliable. Oil should be checked within 10 minutes after stopping engine. If more than 10 minutes have elapsed, motor engine for 40 seconds, then recheck. If more than 10 hours have elapsed, run engine for 2 minutes, then recheck. Add oil as required. Do not overfill.

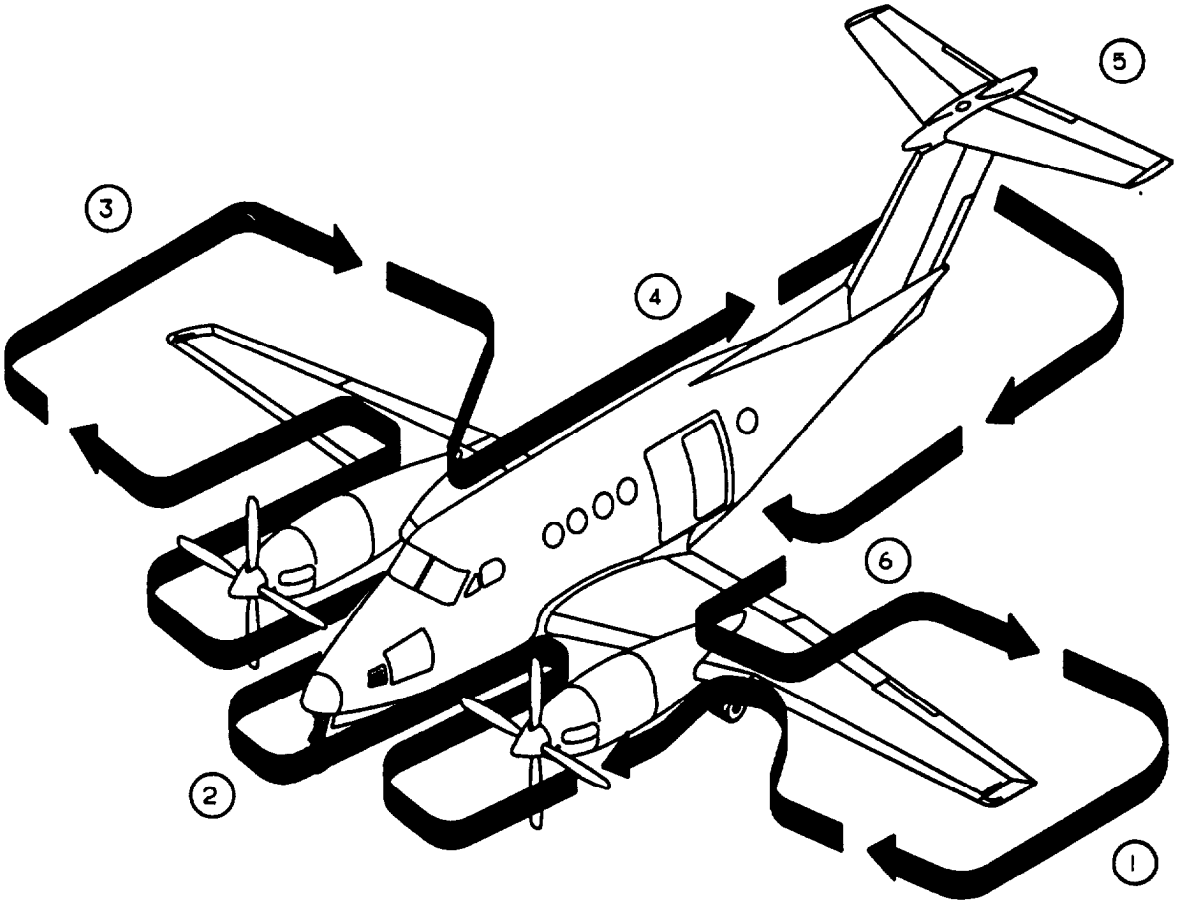

AREA 1. LEFT WING LANDING GEAR, ENGINE, NACELLE, AND PROPELLER
AREA 2. NOSE SECTION
AREA 3. RIGHT WING LANDING GEAR, ENGINE, NACELLE, AND PROPELLER
AREA 4. FUSELAGE, RIGHT SIDE
AREA 5. EMPENNAGE
AREA 6. FUSELAGE, LEFT SIDE

A95BM08C0459 C

Figure 8-2. Exterior Check

*a. Engine oil - Check oil level, no more than 3 quarts low, cap secured, and locking tab aft.

b. Engine compartment, left side - Check for fuel and oil leaks, security of oil cap, door, and general condition. Lock compartment access door.

C. Left cowl locks - Locked.

d. Left exhaust stub - Check for cracks and free of obstructions.

e. Propeller blades and spinner - Check blade condition, deice boot, security of spinner, and free propeller rotation.

f. Engine air inlets and ice vanes - Check free of obstruction and ice vane retraction.

g.. Bypass door - Check condition.

h. Right cowl locks - Locked.

i. Right exhaust stub - Check for cracks and free of obstructions.

j. Engine compartment, right side - Check for fuel and oil leaks, ice vane linkage, door, and general condition. Lock compartment access door.

4. Left wing center section - Check as follows (fig. 8-2):

a. Heat exchanger inlet and outlet - Check for cracks and free of obstructions.

b. Auxiliary tank fuel sump drain - Check for leaks.

c. Hydraulic reservoir vent and pump seal drain - Check vent clear of obstructions, and no excessive fluid is present. Hydraulic landing gear service door secure.

d. Deice boot - Check for bonding, cracks, loose patches, and general condition.

*e. Auxiliary tank fuel and cap - Check fuel level, condition of seal, cap tight and properly installed. Locking tab aft.

5. Fuselage underside - Check as follows (fig. 8-2):

*a. General condition - Check for skin damage such as buckling, splitting, distortion, dents, or fuel leaks.

b. Antennas - Check security and general condition.

8-15. NOSE SECTION, AREA 2

1. Nose section - Check as follows (fig. 8-2):

a. Outside air temperature probe - Check condition.

b. Avionics door, left side - Check secure.

C. Air conditioner exhaust - Check free of obstruction.

d. Wheel well condition - Check for signs of leakage, broken wires, and condition.

e. Doors and linkage - Check condition, security, and alignment.

f. Nose gear turning stop - Check condition.

*g. Tire - Check for cuts, bruises, wear, appearance of proper inflation, and wheel condition.

*h. Shock strut - Check for signs of leakage and three inches minimum extension.

i. Torque knee - Check condition.

j. Shimmy damper and linkage - Check for security and condition.

O k. Headset jack cover - Check installed.

l. Landing and taxi lights - Check for security and condition.

m. Pitot tubes - Check covers removed, alignment, security, and free of obstructions.

n. Radome - Check condition.

CAUTION

Do not move wipers on dry windshield, or clean windshield with anything other than mild soap and water.

o. Windshields and wipers - Check windshields for cracks and cleanliness, and wipers for contact with glass surface.

p. Air conditioner inlet - Check free of obstructions.

q. Avionics door, right side - Check secure,

O r. TAS/CADC probe - Check security and condition.

8.16. RIGHT WING, AREA 3.

1. Right wing center section - Check as follows (fig. 8-2):

   a. Deice boot - Check for secure bonding, cracks, loose patches, and general condition.

   b. Battery access panel - Secure.

   c. Battery exhaust louvers - Check free of obstructions.

   *d. Auxiliary tank fuel and cap - Check fuel level, condition of seal, cap tight and properly installed. Locking tab aft.

   e. Battery compartment drain - Check free of obstruction and check-valve free.

   f. Battery ram air intake - Check free of obstruction.

   g. Auxiliary tank fuel sump drain - Check for leaks.

   h. Heat exchanger outlet and inlet - Check for cracks and free of obstructions.

2. Right engine and propeller - Check as follows (fig. 8-2):

CAUTION

A cold oil check is unreliable. Oil should be checked within 10 minutes after stopping engine. If more than 10 minutes have elapsed, motor engine for 40 seconds, then recheck. If more than 10 hours have elapsed, run engine for 2 minutes, then recheck. Add oil as required. Do not overfill.

   *a. Engine oil - Check oil level, no more than 3 quarts low, cap secure, and locking tab aft.

   b. Engine compartment, left side - Check for fuel and oil leaks, security of oil cap, door, and general condition. Lock compartment access door.

   c. Left cowl locks - Locked.

   d. Left exhaust stub - Check for cracks and free of obstructions.

   e. Propeller blades and spinner - Check blade condition, security of deice boot, spinner security, and free propeller rotation.

   f. Engine air inlets and ice vane - Check free of obstruction and ice vane retracted.

   g. Bypass door - Check condition.

   h. Right cowl locks - Locked.

   i. Right exhaust stub - Check for cracks and free of obstructions.

   j. Engine compartment, right side - Check for fuel and oil leaks, ice vane linkage, door, and general condition. Lock compartment access door.

3. Right main landing gear - Check as follows (fig. 8-2):

   a. Fuel sump drains - Check for leaks.

   *b. Tires - Check for cuts, bruises, wear, appearance of proper inflation, wheel condition, and that both tires have the same tread design.

   c. Brake assembly - Check lines for damage or signs of leakage, and brake linings for wear. Also check brake deice assembly and bleed-air hose for condition and security.

   I d. Shock strut - Check for signs of leakage and minimum strut extension (5.5 inches high-flotation gear, 4 inches standard gear), and left and right extension is approximately equal.

   e. Torque knee - Check condition.

   f. Safety switch - Check condition, wire, and security.

O 4. Fire extinguisher pressure - Check within limits (Chapter 2).

   a. Wheel well, doors, and linkage - Check for signs of leakage, broken wires, security, and general condition.

5. Right wing - Check as follows (fig. 8-2):

   a. Recessed and heated fuel vents - Check free of obstructions.

   b. GPU access door - Secured.

   c. Wing ice light - Check condition.

   d. Outboard deice boot - Check for secure bonding, cracks, loose patches, stall strip, and general condition.

*e. Tiedown - Released.

*f. Main tank fuel and cap - Check fuel level, condition of seal, cap tight and properly installed. Locking tab aft.

g. Outboard wing fuel vent - Check free of obstruction.

h. Wing tip and position light - Check condition and for cracked lens.

O i. Recognition/strobe light - Check condition.

j. Static wicks - Check security and condition.

k. Ailerons and trim tab - Check security and condition of ground adjustable tab.

l. Fuel sump drains - Check for leaks.

m. Flaps - Check for full extension (approximately 1/4 inch play) and skin damage such as buckling, splitting, distortion, or dents.

*n. General condition - Check for skin damage such as buckling, splitting, distortion, dents, or fuel leaks.

8-17. FUSELAGE RIGHT SIDE, AREA 4.

1. Fuselage right side - Check as follows (fig. 8-2):

*a. General condition - Check for skin damage such as buckling, splitting, distortion, or dents.

O b. Emergency light - Check condition.

c. Beacon - Check condition.

d. Aft access door - Check condition.

O e. **Cabin air exhaust -** Clear.

f. Oxygen filler door - Check secure.

g. Static ports - Check clear of obstructions.

h. Emergency locator transmitter - Armed and antenna check.

8-18. EMPENNAGE, AREA 5.

1. Empennage - Check as follows (fig. 8-2):

a. Vertical stabilizer, rudder, and trim tab - Check for skin damage such as buckling, splitting, distortion, or dents, and trim tab rig.

b. Antennas - Check condition.

c. Deice boots - Check for secure bonding, cracks, loose patches, and general condition.

WARNING

If the possibility of ice accumulation on the horizontal stabilizer or elevator exists, do not take off.

d. Horizontal stabilizer, elevator, and trim tab - Check for skin damage such as buckling, splitting, distortion, or dents, and trim tab rig.

e. Elevator trim tab - Verify "0" (neutral) position. The elevator trim tab "0" (neutral) position is determined by observing that the trailing edge of the trim tab aligns with the trailing edge of the elevator while the elevator is resting against the downstops.

f. Static wicks - Check.

g. Position and beacon lights - Check condition.

8-19. FUSELAGE, LEFT SIDE, AREA 6.

1. Fuselage left side - Check as follows (fig. 8-2):

*a. General condition - Check for skin damage such as buckling, splitting, distortion, or dents.

b. Static ports - Check clear of obstructions.

O c. Emergency light - Check condition.

d. Cabin door - Check seal and general condition.

e. Fuselage top side - Check general condition.

*2. Chocks and tiedowns - Removed.

*8-20. INTERIOR CHECK

1. Cargo/loose equipment - Check secure.

★2. Cabin door - Locked and checked. Ensure the cabin door is closed and locked as follows: Check position of safety arm and diaphragm plunger (lift door step) and each of the six rotary cam locks align within the orange sight indicators. In addition, the following inspection and

test shall be performed prior to the first flight of the day:

a. Open cabin door - Check that **DOOR UNLOCKED** annunciator is extinguished.

b. Latch cabin door but do not lock - Check that **DOOR UNLOCKED** annunciator illuminates.

C. **BATT** switch - **ON.** Check that **DOOR UNLOCKED** annunciator is still illuminated.

d. Close and lock cabin door - Check that **DOOR UNLOCKED** annunciator is extinguished.

e. **BATT** switch - **OFF.**

O* 3. Cargo door - Locked and checked. Ensure cargo door is closed and locked as follows:

a. Upper handle position - Closed and locked (orange index marks on each of the four rotary cam locks must align within the sight indicators).

b. Lower pin latch handle position - Closed and latched (orange indicator must align with orange stripe on carrier rod).

NOTE

The untapered shoulder of the latching pins should extend past each attachment lug.

★4. Crew/passenger briefing - Complete.

8-21. BEFORE STARTING ENGINES.

NOTE

GPU engine starts are the preferred starting method.

*1. Parking brake - Set.

*2. Oxygen system - Crew ready.

*3. Pilot's instrument panel - Check

a. Compass control - **SLV.**

b. **PROP SYN** switch - **ON.**

4. Pilot's clock - Check and set.

*5. Pilot's subpanel - Check.

a. **MIC** selector switch - **NORMAL.**

b. Engine ice vanes - As required.

NOTE

The engine anti-ice system (ice vanes) should be **ON** (extended) for all ground operations to minimize ingestion of ground debris. Turn off engine anti-ice (retract ice vanes) to maintain engine temperatures within limits.

O c. Ice vane manual handles - In.

d. **PILOT AIR** control - As required.

e. **DEFROST AIR** control - As required.

f. **LDG GEAR CONTROL - DN.**

g. **LANDING GEAR RELAY** circuit breaker - In.

O h. TAS probe heat - On.

i. All other switches - Off.

*6. Avionics panel switches - As required.

*7. Power console - Check.

a. **POWER** levers - **IDLE.**

b. **PROP** levers - **HIGH RPM.**

c. **CONDITION** levers - **FUEL CUTOFF.**

d. Trim tabs - Set.

e. Landing gear alternate extension handle - Stowed.

*8. Pedestal - Check.

O a. **EFIS POWER** switches - **OFF.**

O b. **AP/TRIM POWER** switch - **OFF.**

c. **CABIN PRESS** switch - **PRESS.**

d. **RUDDER BOOST** switch - On.

O e. Elevator trim switch - On.

f. Pressurization controller - Set.

*9. Copilot's instrument panel - Set.

a. Compass control - **SLV.**

10. Copilot's clock - Check and set.

*11. Copilot's subpanel - Check.

a. **CABIN** signs - As required.

b. **VENT BLOWER** switch - As required.

O c. **AFT BLOWER - OFF.**

d. **BLEED AIR VALVES** switches - **ENVIR OFF.**

e. **CABIN TEMP MODE** control - **OFF.**

f. **CABIN/COCKPIT AIR** control - **OFF.**

g. **COPILOT AIR** control - As required.

h. **MIC** selector switch - **NORMAL.**

I. Oxygen pressure - Check.

*12. Copilot's circuit breaker panel - Check.

13. Static air source - Normal.

*14. **BATT - ON** (23 volts minimum for battery start).

15. Overhead panel lights - As required.

16. Exterior lights - As required.

CAUTION

NEVER CONNECT AN EXTERNAL POWER SOURCE TO THE AIRCRAFT UNLESS A BATTERY INDICATING A CHARGE OF AT LEAST 20 VOLTS IS IN THE AIRCRAFT. If the battery voltage is less than 20 volts, the battery must be recharged, or replaced with a battery indicating at least 20 volts before connecting external power. Use only an external power source fitted with an AN-type plug.

17. GPU - As required.

18. External power advisory light - As required.

19. DC volt/loadmeters - Check loads, voltage, and current limiters.

When an external power source is used, it must be set as follows:

C-12R:

28.0 to 28.4 volts

1000 amps capacity

300 amps maximum continuous

The battery should be on to absorb transients present in some auxiliary power units. An **EXT PWR** annunciator alerts the crew when an external power plug is connected to the aircraft.

NOTE

If the battery is partially discharged, the **BATTERY CHG** annunciator will illuminate approximately 6 seconds after external power is on line. If the annunciator does not extinguish within 5 minutes, refer to the BATTERY CHG ANNUNCIATOR ILLUMINATED procedure in Section IX.

* 8-22. FIRST ENGINE START (BATTERY START).

Starting procedures are identical for both engines except the second engine generator is kept off line after the second engine start to allow performing the current limiters check. When making a battery start, the right engine should be started first. A crewmember should monitor the outside observer throughout the engine start.

1. Propeller area - Clear.

2. **IGNITION AND ENGINE START switch - ON. IGN ON** annunciator should illuminate and associated FUEL PRESS annunciator should extinguish.

CAUTION

If ignition does not occur within 10 seconds after moving the condition lever to **LOW IDLE** initiate **ENGINE CLEARING** procedure. If for any reason the starting attempt is discontinued, the entire starting sequence must be repeated after allowing the engine to come to a complete stop (1 minute minimum).

3. **CONDITION** lever (after N_1 stabilizes at or above 12% for 5 seconds minimum) - **LOW IDLE.**

CAUTION

Monitor ITT to avoid a hot start. If there is a rapid rise in ITT, be prepared to abort the start before limits are exceeded. During starting, the maximum allowable ITT is **1000°C for 5 seconds.** If this limit is exceeded, use ABORT START procedure and discontinue start. Record the peak temperature **and** duration on DA Form 2408-13.

4. **ITT** and N_1 - Monitor. **ITT** 1000°C maximum. N_1 minimum 61% C-12R.

5. Oil pressure - Check (60 PSI minimum).

6. **IGNITION AND ENGINE START** switch - **OFF** after 50% N,.

7. **CONDITION** lever - **HIGH IDLE.** Monitor **ITT** as the condition lever is advanced.

NOTE

Ensure N_1 is at high idle before turning on generator.

8. GEN switch - RESET, then ON.

***8-23. SECOND ENGINE START (BATTERY START).**

1. **First engine generator load - 50% or less.**

2. **First engine GEN switch - Remains ON, continue with start.**

3. **Step Deleted.**

4. **Propeller area - Clear.**

5. **IGNITION AND ENGINE START** switch **- ON. IGN ON light should illuminate and FUEL PRESS light should extinguish.**

6. **Step deleted.**

CAUTION

If ignition does not occur within 10 seconds after moving the condition lever to **LOW IDLE,** initiate ENGINE CLEARING procedure. If for any reason the starting attempt is discontinued, the entire starting sequence must be repeated after allowing the engine to come to a complete stop (1 minute minimum).

7. **CONDITION** lever (after N_1 stabilizes at or above 12% for 5 seconds minimum) - **LOW IDLE.**

CAUTION

Monitor **ITT** to avoid a hot start. If there is a rapid rise in **ITT,** be prepared to abort the start before limits are exceeded. During starting, the maximum allowable **ITT** is 1000°C for 5 seconds. If this limit is exceeded, use ABORT START procedure and discontinue start. Enter the peak temperature and duration on DA Form 2408-13.

8. **ITT** and N_1 - Monitor. **ITT** 1000° C maximum. N_1 minimum 61%

9. Oil pressure - Check (60 PSI minimum).

10. **IGNITION AND ENGINE START** switch - **OFF** after 50% N_1.

11. **BATTERY CHG** annunciator - Check.

12. DC volt/loadmeters - Check loads, voltage, and current limiters.

13. Second engine **GEN** switch - **RESET,** then **ON.**

14. **CONDITION** levers - As required.

O 15. Anti-collision light - Reset.

NOTE

To reset, turn OFF approximately 5 seconds, then on. When voltage drops below approximately 20 volts, the anti-collision light may become inoperative.

16. Inverters - Check and **ON.**

17. AC/DC power - Check

    a. C-12R:

        (1) AC frequency 380 to 420 Hz.

        (2) AC voltage - 105 to 120 VAC.

        (3) DC voltage - 27.5 to 29.0 VDC.

b. DC loads: Parallel within 10%.

(1) 75% maximum - Low Idle.

(2) 85% maximum - High Idle.

(3) 85% maximum - Ground Operations.

18. **AVIONICS MASTER PWR - ON.**

O 19. **EFIS POWER - ON.**

O 20. **AP/TRIM POWER** switch - **ON.**

O 21. Autopilot self-test - Monitor.

a. Allow 3-4 minutes for gyros to erect, **HDG** and **ATTITUDE** flags clear.

b. **A/P FAIL** and **A/P TRIM FAIL -** Annunciators illuminate upon initial application of **AP/TRIM POWER** and then extinguish (followed by an audio test tone) after successful completion of the self-test. Allow 60 seconds after gyros are valid.

c. Repeat self-test on copilot side.

CAUTION

Taxi with caution. The autopilot temporarily engages the servos during the automatic self-test. Be prepared to overpower the autopilot as required.

NOTE

Illumination of the **AP FAIL** annunciator other than during initial power-up indicates a failure. This failure annunciation will result in power being removed from the roll, pitch, yaw, pitch trim, and rudder trim servos. The flight director may remain functional depending upon the nature of the failure. The continuous self-test feature may also inhibit flight director, autopilot, and electric trim use without illumination of the **AP FAIL** annunciator.

22. Engine instruments - Check.

8-24. ABORT START.

1. **CONDITION** lever **- FUEL CUTOFF.**

2. **IGNITION AND ENGINE START** switch - **STARTER ONLY.**

3. **ITT** - Monitor for drop in temperature.

4. **IGNITION AND ENGINE START** switch - **OFF.**

8-25. ENGINE CLEARING.

1. **CONDITION** lever - **FUEL CUTOFF.**

2. **IGNITION AND ENGINE START** switch - **OFF** (1 minute minimum).

CAUTION

Do not exceed starter limitation of 40 seconds on and 60 seconds off for two starting attempts and engine clearing procedure. Allow 30 minutes off before additional starter operation.

3. **IGNITION AND ENGINE START** switch - **STARTER ONLY** (15 seconds minimum, 40 seconds maximum).

4. **IGNITION AND ENGINE START** switch - **OFF.**

* 8-26. FIRST ENGINE START (GPU START).

When making a ground power unit (GPU) start, the left engine should be started first due to the GPU receptacle being located adjacent to the right engine. Normally, only one engine is started utilizing the GPU, reverting to a BATTERY START procedure for the second engine start.

1. Propeller area - Clear.

2. **IGNITION AND ENGINE START** switch - **ON. IGN ON** light illuminated and associated **FUEL PRESS** light extinguished.

CAUTION

If ignition does not occur within 10 seconds after moving the condition lever to **LOW IDLE,** initiate ENGINE CLEARING procedure. If for any reason the starting attempt is discontinued, the entire starting sequence must be repeated after allowing the engine to come to a complete stop (1 minute minimum).

3. **CONDITION** lever (after N_1 stabilizes at or above 12% for 5 seconds) - **LOW IDLE.**

CAUTION

Monitor **ITT** to avoid a hot start. If there is a rapid rise in **ITT,** be prepared to abort the start before limits are exceeded. During engine start, the maximum allowable **ITT** is 1000°C for 5 seconds. If this limit is exceeded, use ABORT START procedure and discontinue start. Record the peak temperature and duration on DA Form 2408-13.

4. **ITT** and N_1 - Monitor. **ITT** 1000°C maximum. N_1 minimum 61%

5. Oil pressure - Check (60 PSI minimum).

6. **IGNITION AND ENGINE START** switch - **OFF** after 50% N,.

7. **CONDITION** lever - **HIGH IDLE.** Monitor ITT as the condition lever is advanced.

8. GPU - Disconnect.

CAUTION

Do not turn on generators with GPU connected.

9. **GEN** switch (after GPU disconnected) - **RESET** then **ON.**

NOTE

After starting the first engine with a GPU, the second engine is normally started utilizing a battery start. If a GPU start is required or desired for the second engine start, then utilize the SECOND ENGINE START (GPU START) procedure. Otherwise, utilize SECOND ENGINE START (BATTERY START) procedure.

*** 8-27. SECOND ENGINE START (GPU START).**

1. Propeller area - Clear.

2. **IGNITION AND ENGINE START** switch - **ON. IGN ON** light illuminated and the associated **FUEL PRESS** light extinguished.

CAUTION

If ignition does not occur within 10 seconds after moving condition lever to low idle, initiate ENGINE CLEARING procedure. If for any reason a starting attempt is discontinued, the entire starting sequence must be repeated after allowing the engine to come to a complete stop (1 minute minimum).

3. **CONDITION** lever (after N_1 RPM stabilizes at or above 12% for 5 seconds) - **LOW IDLE.**

CAUTION

Monitor **ITT** to avoid a hot start. If there is a rapid rise in **ITT,** be prepared to abort the start before limits are exceeded. During engine start, the maximum allowable **ITT** is 1000°C for 5 seconds. If this limit is exceeded, use ABORT START procedure and discontinue start. Record the peak temperature and duration on DA Form 2408-13.

4. **ITT** and N_1 - Monitor. **ITT** 1000°C maximum. N_1 minimum 61%.

5. Oil pressure - Check (60 PSI minimum).

6. **IGNITION AND ENGINE START** switch - **OFF** after 50% N_1.

7. Right **PROP** lever - **FEATHER**

8. GPU - Disconnect.

9. Right **PROP** lever - **HIGH RPM.**

10. **GEN** switch - **RESET,** then **ON.**

11. DC volt/loadmeters - Check loads, voltage, and current limiters.

12. **CONDITION** levers - As required.

O 13. Anti-collision light - Reset.

NOTE

To reset, turn off approximately 5 seconds, then on. When voltage drops below approximately 20 volts, the anti-collision light may become inoperative.

14. Inverters - Check.

15. AC/DC power - Check

a. C-12R:

(1) AC frequency 380 to 420 Hz.

(2) AC voltage - 105 to 120 VAC.

(3) DC voltage - 27.5 to 29.0 VDC.

b. DC loads: Parallel within 10%.

(1) 75% maximum - **LOW IDLE.**

(2) 85% maximum - **HIGH IDLE.**

(3) 85% maximum - Ground Operations.

16. **AVIONICS MASTER PWR - ON.**

O 17. **EFIS POWER** switches - **ON.**

O 18. **AP/TRIM POWER** switch - **ON.**

O 19. Autopilot self-test - Monitor.

a. Allow 3-4 minutes for gyros to erect, **HDG** and **ATTITUDE** flags clear.

b. **A/P FAIL** and **A/P TRIM FAIL** - Annunciators illuminate upon initial application of **AP/TRIM POWER** and then extinguish (followed by an audio test tone) after successful completion of the self-test. Allow 60 seconds after gyros are valid.

c. Repeat self-test on copilot side.

CAUTION

Taxi with caution. The autopilot temporarily engages the servos during the automatic self-test. Be prepared to overpower the autopilot as required.

NOTE

Illumination of the **AP FAIL** annunciator other than during initial power-up indicates a failure. This failure annunciation will result in power being removed from the roll, pitch, yaw, pitch trim, and rudder trim serves. The flight director may remain functional depending upon the nature of the failure. The continuous self-test feature may also inhibit flight director, autopilot, and electric trim use without illumination of the **AP FAIL** annunciator.

20. Engine instruments - Check

*** 8-28. BEFORE TAXIING.**

1. **CABIN** signs - As required.

2. **BLEED AIR VALVES** - As required.

3. **CABIN TEMP MODE** - Set.

O 4. **AFT BLOWER** - As required.

5. Avionics - Check and set.

O 6. EFIS - **TEST.**

O 7. HSI failure warning system - Check

O 8. Voice and flight data recorders - Check.

9. Radar - As required.

10. Standby horizon - **ON,** and uncaged.

11. Altimeters - Set and check.

O 12. ADI warning flags - Check no flags.

13. **FLAPS** - Check.

O 14. EFIS brightness - Set.

CAUTION

Do not leave brake deice on longer than required to check function of annunciators when ambient temperatures are above 15°C.

★**15. BRAKE DEICE** - Check, use as required.

a. **BLEED AIR VALVES - OPEN.**

b. **BRAKE DEICE** - On, annunciator illuminated.

c. **CONDITION** levers - **HIGH IDLE** if brake deice is to be used.

d. **BRAKE DEICE - OFF,** annunciator extinguished.

e. **CONDITION** levers - **LOW IDLE.**

NOTE

Brake deice control valves may become inoperative if valves are not cycled periodically. One cycle of the valves is required daily regardless of the weather conditions.

16. Exterior lights - As required.

17. Taxi area - Clear.

***8-29. TAXIING.**

CAUTION

Never taxi with a flat tire or a flat shock strut. During taxi operations, particular attention should be given to propeller tip clearance. Extreme caution is required when operating on unimproved or irregular surfaces or when high winds exist, If operations produce a propeller RPM over 1600, retard propeller levers to the detent to limit RPM to 1600 to help reduce the possibility of ingestion of ground debris.

1. Brakes - Check.
2. Flight instruments - Check.

8-30. ENGINE RUNUP.

1. Parking brake - Set.
2. Manual prop feathering - Check.

O 3. Ground idle stop - Check.

★ **4. AUTOFEATHER/AUTO IGNITION - Check** as required.

a. **AUTO IGNITION** switches - **ARM.**

b. **POWER** levers - 500 ft-lbs/22% torque.

c. **AUTOFEATHER** switch - Hold to **TEST.** Both **AUTOFEATHER** annunciators illuminated.

d. **POWER** levers - Retard individually.

(1) Approximately 400 ft-lbs/16 to 21% torque, opposite **AUTOFEATHER** annunciator extinguishes, **IGN ON** annunciator illuminated.

(2) Approximately 260 ft-lbs/9 to 14% torque, both **AUTOFEATHER** annunciators extinguished (prop begins to feather).

NOTE

AUTOFEATHER annunciators will illuminate and extinguish with each fluctuation of torque as the propeller feathers.

(3) Return **POWER** levers to approximately 500 ft-lbs/22% torque.

e. Repeat procedure with other engine.

f. **POWER** levers - **IDLE.**

g. **AUTOFEATHER** switch - **ARM.**

h. **AUTO IGNITION** switches - Off.

★ 5. Overspeed governors and rudder boost - Check as required.

a. **RUDDER BOOST** switch - On.

b. **PROP** levers - **HIGH RPM.**

c. **PROP GOV TEST** switch - Hold in **TEST** position.

d. Left **POWER** lever - Increase until propeller is stabilized at 1830 - 1910 RPM. Continue to increase until rudder movement is noted. (Observe **ITT** and torque limits.)

e. **POWER** lever - Retard to **IDLE.**

f. Repeat steps c, d, and e for the right engine.

★6. Primary governors - Check as required.

a. **POWER** levers - Set 1800 RPM.

b. PROP levers - Retard to **FEATHER** detent. Note propellers stabilize between 1600 and 1640 RPM.

c. **PROP** levers - **HIGH RPM.** Note propellers return tp 1800 RPM.

★ 7. Engine anti-ice/ice vanes - Check.

a. Anti-ice/ice vanes - ON/extended.

(1) Both advisory lights illuminated.

(2) Both bypass doors extended.

(3) Maximum time for (1) and (2) is 15 seconds.

b. Anti-ice/ice vanes - OFF/retracted.

(1) Both advisory lights extinguish.

(2) Both bypass doors retracted.

(3) Maximum time for (1) and (2) is 15 seconds.

O c. Electrical standby system - Check.

8. **CONDITION** levers - **HIGH IDLE.**

★9. Anti-ice/deice systems - Check.

O a. Anti-collision light - **OFF.**

b. Either generator - **OFF.**

c. Prop deice - Check. When **MANUAL** mode is selected, note rise on DC loadmeter. When **AUTO** mode is selected, monitor prop ammeter for 90 seconds and ensure the indicator remains in the normal operating range the entire time.

d. **FUEL VENT** heat - Check. Note slight rise on loadmeter.

e. Windshield heat - Check. Note increases on the loadmeter and cycle through both normal and high settings.

NOTE

If windshield heat is needed prior to takeoff, use **NORMAL** setting for a minimum of 15 minutes prior to selecting **HIGH** to provide adequate preheating and minimize the effects of thermal shock. The windshield heat thermostat will invalidate the check in OAT above 20 to 30 degrees C.

f. Note slight rise on loadmeter on following checks.

(1) Pitot heat.

(2) Stall warning heat.

g. All anti-ice/deice switches - **OFF.**

h. Generator - **RESET,** then **ON.**

O i. Anti-collision light - **ON.**

j. Surface deice system - Check.

★10. Vacuum and pneumatic system - Check.

a. **LEFT BLEED AIR VALVE - OFF.**

(1) Pneumatic and suction pressures remain normal.

(2) **L BL AIR OFF** annunciator illuminates.

(3) Both **BL AIR FAIL** annunciators remain extinguished.

b. **RIGHT BLEED AIR VALVE - OFF.**

(1) Pneumatic and suction pressures read zero.

(2) Both **BL AIR OFF** and **BL AIR FAIL** annunciators illuminated.

c. **LEFT BLEED AIR VALVE - ON.**

(1) Pneumatic and suction pressures return to normal.

(2) Both **BL AIR FAIL** annunciators extinguished.

(3) **L BL AIR OFF** annunciator extinguished.

d. **RIGHT BLEED AIR VALVE - ON.**

(1) **R BL AIR OFF** annunciator extinguished.

11. **POWER** levers - **IDLE.**

*★12. Pressurization - Check and set.

a. **BLEED AIR VALVES** - Both **ON.**

b. **CABIN ALTITUDE** - Set 500 feet lower than field pressure altitude.

c. **CABIN PRESS** switch - **TEST.** Cabin climb/descent gage indicates a descent.

d. **CABIN PRESS** switch - Release. Cabin climb/descent gage indicates a climb, then stabilizes at zero climb.

e. Altitude selector - Set airport elevation plus 500 feet or cruise altitude plus 1000 feet, whichever is higher.

13. **CONDITION** levers - **LOW IDLE.**

★14. Flight control/autopilot system - Check.

a. **AP XFER** switch - Select pilot's side.

b. **AP** mode selector button **(AP)** - Press to engage autopilot.

WARNING

If unable to overpower the autopilot in any axis, do not use.

c. Flight controls - Overpower autopilot in pitch, roll and yaw axis.

d. Auto trim - Check.

(1) Apply nose up force on control wheel - Note nose down trim motion after approximately 3 seconds.

(2) Apply nose down force on control wheel - Note nose up trim motion after approximately 3 seconds.

(3) Press right rudder - Note left rudder trim motion after approximately 3 seconds.

(4) Press left rudder - Note right rudder trim motion after approximately 3 seconds.

(5) Select **HDG** mode - Observe **FD** commands and control wheel motion correspond to movement of the heading selector knob.

(6) **AP DISC & TRIM INTRPT** - Press and release. Note autopilot disconnection, flashing **AP** annunciation, and aural disconnect tone.

e. Manual electric trim - Check.

(1) Pilot and copilot control wheel trim switches - Check

WARNING

Operation of the electric trim switch system should occur only by movement of pairs of switches. Any movement of the elevator trim wheel while depressing only one switch element denotes a trim system malfunction. The **AP/TRIM POWER** switch must be turned **OFF** and flight conducted only by manual operation of the trim wheel. Do not use autopilot.

(2) Pilot and copilot trim switches - Check individual element for no movement of trim, then check proper operation of both elements.

(3) Pilot trim switches - Check that pilot switches override copilot switches while trimming in opposite directions, and trim moves in direction commanded by pilot.

(4) Pilot and copilot trim switches - Check trim disconnects while activating pilot or copilot trim disconnect switches.

f. **AP XFER** switch - Select copilot's side and repeat steps b thru e.

O 15. Ground collision avoidance system - Check.

16. Radar - Check.

***8-31. BEFORE TAKEOFF.**

1. Fuel panel - Check fuel quantity and switch positions.

2. **AUTOFEATHER - ARMED.**

3. Flight and engine instruments - Check.

4. Avionics - Set.

5. Altitude alerter(s) - Set and check.

6. Propellers - **HIGH RPM.**

7. **FLAPS** - As required.

8. Trim - Set.

9. Autopilot/yaw damper - **OFF.**

10. **BLEED AIR VALVES** - As required.

11. Annunciator lights - Check.

12. Flight controls - Check.

★13. Departure briefing - Complete.

*** 8-32 LINE UP.**

1. Transponder - **ON.** Proper code and **ALT.**

2. **LANDING, TAXI, RECOG** and **STROBE** lights - **ON.**

3. Anti-ice/deice - As required.

4. Engine anti-ice/deice vanes - As required.

5. **AUTO IGNITION - ARM.**

6. Radar - As required.

7. Power stabilized - 600 ft-lbs/27% torque minimum.

8-33. TAKEOFF.

To aid in planning the takeoff and to obtain maximum aircraft performance, make full use of the information affecting takeoff shown in Chapter 7. The data shown was achieved by setting brakes, setting takeoff power, and then releasing brakes. The takeoff will be accomplished in accordance with the appropriate army training manual (ATM).

8-34. AFTER TAKEOFF.

WARNING

Immediately after takeoff, the pilot flying the aircraft should avoid adjusting controls located on the aft portion of the extended pedestal to preclude inducing spatial disorientation.

1. **GEAR - UP.**
2. **FLAPS - UP.**
3. Climb power - Set.
4. Wings and nacelles - Check.

8-35. CLIMB.

a. Cruise Climb. Cruise climb is performed at a speed which is the best combination of climb, fuel burn-off, and distance covered. Set propellers at 1900 RPM and torque at maximum allowable (or maximum climb **ITT,** monitor N_1). Adhere to the following airspeed schedule as closely as possible:.

SL to 10,000 feet	160 KIAS
10,000 to 20,000 feet	140 KIAS
20,000 to 25,000 feet	130 KIAS
25,000 to 35,000 feet	120 KIAS

b. Climb - Maximum Rate. Maximum rate of climb performance is obtained by setting propellers at 2000 RPM, torque at maximum allowable (or maximum climb **ITT,** monitor N_1), and maintaining best rate-of-climb airspeed. Refer to Chapter 7 for best rate-of-climb airspeed (V_Y) for specific weights.

c. Climb Checklist. Complete as follows:

1. Yaw damp - As required.
2. **AUTOFEATHER** - As required.
3. Cabin pressurization - Check. Adjust rate control knob so that cabin rate-of-climb equals one third of aircraft rate-ofclimb.
4. **CABIN** signs - As required.
5. **LANDING/TAXI** lights - **OFF.**
6. **BRAKE DEICE** - As required.
7. Windshield heat - As required

NOTE

Turn the windshield heat on to **NORMAL** when passing 10,000 feet AGL or prior to entering the freezing level (whichever comes first). Leave on until no longer required during descent for landing. **HIGH** temperature may be selected as required after a minimum warm-up period of 15 minutes.

8. Altimeters - Set.

8-36. CRUISE.

Cruise power settings are entirely dependent upon the prevailing circumstances and the type of mission being flown. Refer to Chapter 7 for airspeed, power settings, and fuel flow information. The following procedures are applicable to all cruise requirements.

1. Power - Set. Refer to the cruise power graphs contained in Chapter 7. To account for ram air temperature increase, it is essential that temperature be obtained at stabilized cruise airspeed. Power is set using RPM and torque as the primary control. Maximum allowable torque must not be exceeded and **ITT** must also be observed as a separate limit.

NOTE

A new engine operated at the torque value presented in the cruise power charts will show an **ITT** margin below the maximum cruise limit for the torque value presented in the charts. With ice vanes retracted **(ENGINE ANTI-ICE OFF),** if cruise torque settings shown on the power charts cannot be obtained without exceeding **ITT** limits, the engine should be inspected.

2. Ice and rain switches - As required. Ensure anti-ice equipment is activated before entering icing conditions.
3. **CABIN** signs - As required..
4. Auxiliary fuel gages - Monitor. Ensure fuel is being transferred from auxiliary tanks. (Chapter 2, Section IV).
5. Altimeters - Check. Verify altimeter settings are correct.
6. Engine instruments - Check. Note indications.

8-37. DESCENT.

Descent from cruise altitude should normally be made by letting down at cruise airspeed with reduced power. Refer to Chapter 7 for power settings and rates of descent.

NOTE

Cabin pressure controller should be adjusted prior to starting descent.

a. Descent - Maximum Rare (Clean). To obtain the maximum rate of descent in clean configuration, perform the following:

1. Cabin pressurization - Set. Adjust cabin controller dial as required. While descending, adjust rate control knob so that cabin rate of descent equals one-third aircraft rate of descent.
2. **CABIN** signs - As required.
3. **POWER** levers - **IDLE.**
4. **PROP** levers - **HIGH RPM.**
5. **GEAR - UP.**
6. **FLAPS - UP.**
7. Airspeed - V,.
8. Ice and rain switches - As required.
9. O Recognition lights - As required.

b. Descent - Maximum Rate (Landing Configuration). If required to descend at a low airspeed (e.g., to conserve airspace or in turbulence), approach flaps and landing gear may be extended to increase the rate and angle of descent while maintaining a slower airspeed. To perform, use the following procedure:

1. Cabin pressurization - Set. Adjust cabin controller dial as required. While descending, adjust rate control knob so that cabin rate of descent equals one-third aircraft rate of descent.
2. **CABIN** signs - As required.
3. **POWER** levers - **IDLE.**
4. **PROP** levers - **HIGH RPM.**
5. **FLAPS - APPROACH.**
6. **GEAR - DOWN.**
7. Airspeed - 181 KIAS maximum.
8. Ice and rain switches - As required.
9. O Recognition lights - As required.

8-38. DESCENT-ARRIVAL

Perform the following checks prior to the final descent for landing:

1. Cabin pressurization - Set. Adjust cabin controller dial as required.
2. **CABIN** signs - As required.
3. Ice and rain switches - As required.

NOTE

Set windshield heat to **NORMAL** or **HIGH** as required well before descent into icing conditions or into warm moist air to aid in defogging. Turn off windshield heat when descent is completed to lower altitudes and when heating is no longer required. This will preclude possible windshield distortions.

4. Windshield heat - As required.
5. O Recognition lights - **ON.**
6. Altimeters - Set to current setting.
7. ★ Arrival briefing - Complete.

8-39. BEFORE LANDING.

1. **CABIN** signs - **NO SMOKE & FSB.**
2. **AUTOFEATHER - ARM.**
3. Engine anti-ice/ice vanes - As required.
4. **PROP** levers - As required.

NOTE

During approach, propellers should be set at 1900 RPM to prevent glideslope interference (ILS approach), provide better power response during approach, and minimize attitude change when advancing propeller levers for landing.

5. **FLAPS** (below 200 KIAS) - **APPROACH.**
6. **GEAR** (below 181 KIAS) - **DOWN/confirm.**
7. **LANDING LIGHTS** - As required.
8. **BRAKE DEICE** - As required.

8-40. LANDING.

Performance data charts for landing computations assume the runway is paved, level, and dry. Additional runway must be allowed when these conditions are not met. Do not consider headwind during landing computations; however, if landing must be downwind, include the tailwind in landing distance computation. Conduct all landings in accordance with the appropriate army training manual. Perform the following procedure as the aircraft nears the runway:

1. **AP** & **YD** - Disengaged.
2. Gear down lights - Check/confirm.
3. **PROP** levers - **HIGH RPM.**

8-41. TOUCH AND GO LANDING.

The instructor should select a point on the runway where all pre-takeoff procedures will have been completed prior to the pilot's initial application of power. In selecting this point, prime consideration shall be given to the required accelerate-stop distance pre-computed on a current performance planning card (PPC). The nosewheel should be on the runway and rolling straight before the power is advanced. After the pilot applies power to within 5 percent of the takeoff power, the instructor's actions are the same as during a normal takeoff. Use the following procedure:

1. **PROP** levers - **HIGH RPM.**
2. **FLAPS** - As required.
3. Trim - Set.
4. Power stabilized - Check 600 ft-lbs/27% torque minimum.
5. Takeoff power - Set.

8-42. GO-AROUND/MISSED APPROACH.

Accomplish the maneuver in accordance with the appropriate army training manual utilizing the following procedure:

1. Power - As required.
2. **GEAR - UP.**
3. **FLAPS - UP** (V_{REF}).
4. **LANDING/TAXI LIGHTS - OFF.**
5. Climb power - Set.
6. Yaw damp - As required.
7. **BRAKE DEICE - OFF.**

8-43. AFTER LANDING.

Complete the following procedures after the landing rollout is complete and normal taxi speed is attained:

1. Radar/transponder - **STBY or OFF.**
2. **CONDITION** levers - As required.
3. **FLAPS-UP.**
4. **AUTO IGNITION** - Off.
5. **AUTOFEATHER** - **OFF.**
6. Engine anti-ice/ice vanes - As required.
7. Ice and rain switches - As required.
8. **LANDING/TAXI LIGHTS** - As required.

O 9. **STROBE** lights - **OFF.**

O 10. **RECOG** lights - **OFF.**

11. Trim - Set.

8-44. ENGINE SHUTDOWN.

NOTE

To prevent sustained loads on rudder shock links, the aircraft should be parked with the nose gear centered.

1. Parking brake - Set.

O 2. **EFIS POWER - OFF.**

O 3. **AP/TRIM POWER** switch - **OFF.**

4. Avionics - As required.
5. Step deleted.
6. **INVERTER - OFF.**
7. **CABIN TEMP MODE - OFF.**
8. **BLEED AIR VALVES - ENVIRO OFF.**
9. **VENT BLOWER - AUTO.**

O 10. **AFT BLOWER - OFF.**

11. **LANDING/TAXI LIGHTS - OFF.**
12. **ICE PROTECTION - OFF.**
13. Battery condition - Check. Battery charge light should be extinguished. If it is illuminated, turn the battery switch **OFF** momentarily and note loadmeter reading. Turn the battery switch **ON** and wait approximately 90 seconds, then turn the battery switch **OFF** and note loadmeter reading. Battery condition is unsatisfactory if the battery charge light remains illuminated and charge current fails to decrease between checks.

CAUTION

Monitor **ITT** during shutdown. If sustained combustion is observed, proceed immediately to ABORT START procedure.

14. **ITT** - 660° or below for one minute prior to shutdown.
15. **CONDITION** levers - **FUEL CUTOFF.**
16. **PROP** levers - **FEATHER.**

WARNING

Do not turn off exterior lights until propeller rotation has stopped.

17. Exterior lights - **OFF.**
18. DC voltmeters - Check voltage.
19. Overhead panel switches - As required.
20. Oxygen system - Off.
21. **AVIONICS MASTER PWR - OFF.**
22. **MASTER SWITCH - OFF.**
23. Chocks - As required.
24. Parking brake - As required
25. Control locks - As required.

8-45. BEFORE LEAVING AIRCRAFT.

1. Wheels - Chocked.

NOTE

Brakes should be released after chocks are in place (ramp conditions permitting).

2. Parking brake - As required.
3. Flight controls - Locked.

N4. Overhead flood lights - **OFF.**

5. **STANDBY PUMPS - OFF.**
6. Transponder - As required.,
7. COMSEC - Zeroize as required.

O 8. Windows - As required. Do not leave passenger windows in polarized (dark) position.

9. Emergency exit lock - As required.

O 10. Galley power switches - **OFF.**

11. Aft cabin light - **OFF.**
12. Door light - **OFF.**

CAUTION

If strong winds are anticipated while the aircraft is unattended, the propellers shall be secured to prevent windmilling with zero engine oil pressure.

13. Walk-around inspection - Complete. Conduct a thorough walk-around inspection, checking for damage, fluid leaks, and levels. Check that covers, tiedowns, restraints, and chocks are installed as required.
14. Aircraft forms - Complete. In addition to established requirements for reporting any system defects, or unusual and excessive operation such as hard landings, etc., the flight crew will also make entries on DA Form 2408-13 to indicate when limits in the Operator's Manual have been exceeded.
15. Aircraft secured - Check. Lock cabin door as required.

Section III. INSTRUMENT FLIGHT

8-46. GENERAL.

This aircraft is qualified for operation in instrument flight meteorological conditions. Flight handling, stability characteristics, and range are the same during instrument flight conditions as when under visual flight conditions.

8-47. INSTRUMENT FLIGHT PROCEDURES.

Refer to FM 1-240, FM 1-230, FLIP, AR 95-1, FC 1-218, FAR 91 (sub parts A and B), applicable foreign government regulations, and procedures described in this manual. Accomplish all instrument flight tasks in accordance with the appropriate army training manual.

Section IV. FLIGHT CHARACTERISTICS

8-48. STALLS.

A prestall warning in the form of very light buffeting can be felt when a stall is approached. A mechanical warning is also provided by a warning horn. The warning horn starts to alarm approximately five to ten knots above stall speed with the aircraft in any configuration. If correct stall recovery technique is used, little altitude will be lost during the stall recovery. For the purpose of this section, the term "power-on" means that both engines and propellers are operating normally and are responsive to pilot control. The term "power-off means that both engines are operating at idle power. Landing gear position has no effect on stall speed. During practice, enter power-off stalls from normal glides. Enter power-on stalls by smoothly increasing pitch attitude to a climb attitude (do not exceed 20°), and hold that attitude until the stall occurs.

a. Power-On Stalls. The power on stall attitude is steep and, unless this high pitch attitude is maintained, the aircraft will generally "settle" or "mush" instead of stall. It is difficult to stall the aircraft inadvertently in any normal maneuver. A light buffet precedes most stalls, and the first indication of approaching stall is generally a decrease in control effectiveness, accompanied by a stall warning horn. The stall itself is characterized by a rolling tendency if the aircraft is allowed to yaw. The proper use of rudder will minimize the tendency to roll. A slight pitching tendency will develop if the aircraft is held in the stall, resulting in the nose dropping sharply, then pitching up toward the horizon; this cycle is repeated until recovery is made. Control is regained very quickly with little altitude loss, providing the nose is not lowered excessively. Begin recovery with forward movement of the control wheel and a gradual return to level flight. The roll tendency caused by yaw is more pronounced in power-on stalls, as is the pitching tendency; however, both are easily controlled after the initial entry. Power-on stall characteristics are not greatly affected by flap position, except that stalling speed is reduced in proportion to flap extension.

b. Power-Off Stalls. The roll tendency is considerably less pronounced in power-off stalls (in any configuration), and is more easily prevented or corrected by adequate rudder and aileron control, respectively. The nose will generally drop straight through with some tendency to pitch up again if recovery is not made immediately. With flaps down, there is little or no roll tendency and stalling speed is much slower than with flaps up. The Stall Speeds chart (fig. 8-3) shows the indicated power-off stall speeds with aircraft in various configurations. Altitude loss during a full stall may be as much as 1000 feet.

c. Accelerated Stalls. The aircraft gives noticeable stall warning in the form of buffeting before the stall occurs. The stall warning and buffet can be demonstrated in turns by applying excessive back pressure on the control wheel.

8-49. SPINS.

Intentional spins are prohibited. If a spin is inadvertently entered, use the following recovery procedure:

NOTE

Spin demonstrations have not been conducted. The recovery technique is based on the best available information.

The first three actions should be as nearly simultaneous as possible.

1. **POWER** levers - **IDLE.**
2. Apply full rudder opposite direction of spin rotation.
3. Simultaneously with rudder application, push the control wheel forward and neutralize ailerons.
4. When rotation stops, neutralize rudder.

STALL SPEEDS-POWER IDLE

NOTES:

1. MAXIMUM ALTITUDE LOSS DURING A NORMAL STALL RECOVERY IS APPROXIMATELY 1000 FEET.
2. MAXIMUM NOSE DOWN PITCH ATTITUDE AND ALTITUDE LOSS DURING RECOVERY FROM ONE ENGINE INOPERATIVE STALLS PER FAR 23.205 ARE APPROXIMATELY 20° AND 850 FEET RESPECTIVELY.
3. A NORMAL STALL RECOVERY TECHNIQUE MAY BE USED. THE BEST PROCEDURE IS A BRISK FORWARD WHEEL MOVEMENT TO A NOSE DOWN ATTITUDE. LEVEL THE AIRPLANE AFTER AIRSPEED HAS INCREASED APPROXIMATELY 25 KNOTS ABOVE STALL.

EXAMPLE:

WEIGHT	11,700 LBS
FLAPS	APPROACH
ANGLE OF BANK	30°
STALL SPEED	95 KTS CAS 90 KTS IAS

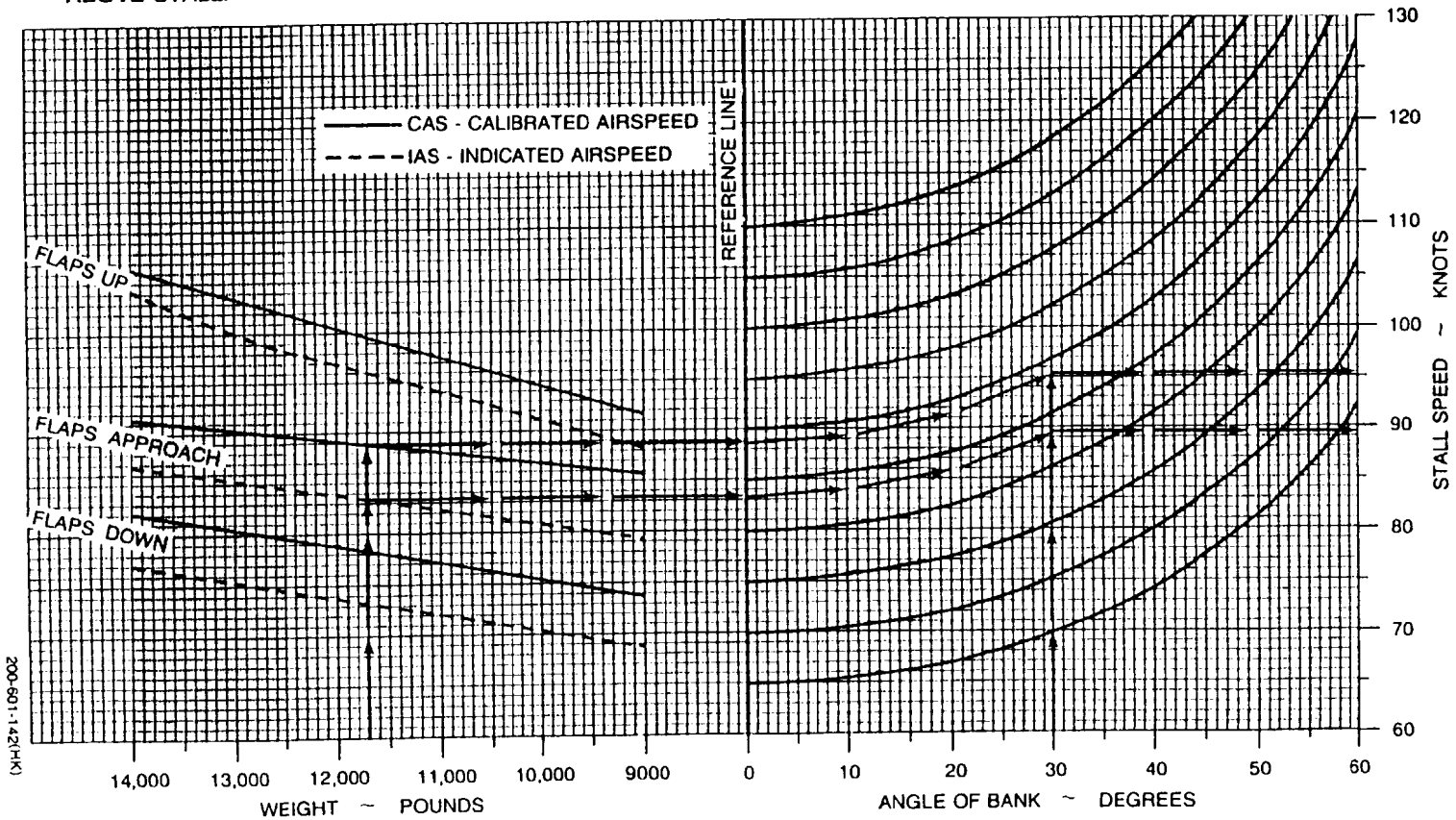

Figure 8-3. Stall Speeds - Power Idle

CAUTION

Do not pull out of the resulting dive too abruptly. This could cause excessive wing loads and possibly a secondary stall.

5. Pull out of dive by exerting a smooth, steady back pressure on control wheel, avoiding an accelerated stall and excessive aircraft stresses.

8-50. DIVING.

Maximum airspeed (red line) V_{MO}/M_{MO} is 2.59 KIAS or .52 Mach. Flight characteristics are conventional throughout a dive maneuver; however, caution should be used if rough air is encountered after maximum allowable dive speed has been reached. Dive recovery should be very gentle to avoid excessive aircraft stresses.

8-51. MANEUVERING FLIGHT.

Maneuvering speed (V_A) at which full abrupt control inputs can be applied without exceeding the design load factor of the aircraft is shown in Chapter 5. The data is based on 12,500 pounds and there are no restrictions below this weight. There are no unusual characteristics during accelerated flight.

8-52. FLIGHT CONTROLS.

The aircraft is stable under all normal flight conditions. Aileron, elevator, rudder, and trim tab controls function effectively throughout all normal flight conditions. Elevator control forces are relatively light in the extreme aft CG (center of gravity) condition, progressing to moderately high with CG at the forward limit. Extending and retracting the landing gear causes only slight changes in control pressure. Control pressures resulting from changing power settings or repositioning the flaps are not excessive in the landing configuration at the most forward CG. The minimum speed at which the aircraft can be fully trimmed is 92 KIAS (gear and flaps down, propellers at high RPM). Control forces produced by changes in speed, power setting, flap position and landing gear position are light and can be overcome with one hand on the control wheel. Trim tabs permit the pilot to reduce control forces to zero. During single-engine operation, the rudder boost system aids in relieving the relatively high rudder pressures resulting from the large asymetry in power.

8-53. LEVEL FLIGHT CHARACTERISTICS.

All flight characteristics are conventional throughout the level flight speed range.

Section V. ADVERSE ENVIRONMENTAL CONDITIONS

8-54. INTRODUCTION.

The purpose of this Section is to inform the pilot of the special precautions and procedures to be followed during the various weather conditions that may be encountered in flight. This Section is primarily narrative; only those checklists that cover specific procedures characteristic of weather operations are included. The Checklist in Section II provides for adverse environmental operations.

8-55. COLD WEATHER OPERATIONS.

Operational difficulties may be encountered during extremely cold weather, unless proper steps are taken prior to or immediately after flight. All personnel should understand and be fully aware of the necessary procedures and precautions involved.

a. Preparation For Flight.

CAUTION

For ground operations conducive to ice accumulation on landing gear structure, use undiluted defrosting fluid on brakes and tires to reduce the tendency of ice accumulation during taxi, takeoff and subsequent landing.

Accumulations of snow, ice, or frost on aircraft surfaces will adversely affect takeoff distance, climb performance, and stall speed to a dangerous degree. Such accumulations must be removed before flight. In addition to the normal exterior checks, following the removal of ice, snow, or frost, inspect wing and empennage surfaces to verify that these surfaces remain sufficiently cleared. Also, move all control surfaces to confirm full freedom of movement. Assure that tires are not frozen to wheel chocks or to the ground. Use ground heaters, anti-ice solution, or brake deice to free frozen tires. When heat is applied to release tires, the temperature should not exceed 71° C (160°F). Refer to Chapter 2 for anti-icing, deicing, and defrosting treatment.

b. Engine Starting. When starting engines on ramps covered with ice, propeller levers should be in the **FEATHER** position to prevent the tires from sliding. To prevent exceeding torque limits when advancing condition levers to **HIGH IDLE** during the starting procedure, place the power lever in **BETA** and the propeller lever in **HIGH RPM** before advancing the condition lever to **HIGH IDLE.**

c. Warm-Up and Ground Test. Warm-up procedures and ground test are the same as those outlined in Section II.

d. Taxiiing, Whenever possible, taxiing in deep snow, light weight dry snow, or slush should be avoided, particularly in colder OAT conditions. If it is necessary to taxi through snow or slush, do not set the parking brake when stopped. If possible, do not park the aircraft in snow or slush deep enough to reach the brake assemblies. Chocks or sandbags should be used to prevent the aircraft from rolling while parked. Before attempting to taxi, activate the brake deice system, insuring that the bleed air valves are open and that the condition levers are in **HIGH IDLE.** An outside observer should visually check wheel rotation to ensure brake assemblies have been deiced. The condition levers may be returned to **LOW IDLE** as soon as the brakes are free of ice.

e. Before Takeoff.

CAUTION

If the possibility of ice accumulation on the horizontal stabilizer or elevator exists, do not attempt takeoff.

If icing conditions are expected, activate all anti-ice systems before takeoff, allowing sufficient time for the equipment to become effective.

f. Takeoff.

NOTE

Following takeoff from runways covered with snow or slush, consideration should be given to operating the landing gear through several complete cycles (within limits) to dislodge ice accumulated from the spray of slush and water and to prevent gear freezing in the retracted position.

Takeoff procedures for cold weather operations are the same as for normal takeoff. Taking off with temperature at or below freezing, with water, slush, or snow on the runway, can cause ice to accumulate on the landing gear and can throw ice into the wheel well areas. Such takeoffs shall be made with brake deice on and with the ice vanes extended to preclude the possibility of ice build-up on engine air inlets. Monitor oil temperature to ensure operation within limits. Before flight into icing conditions, the pilot and copilot **WSHLD** and **ANTI-ICE** switches should be set at **NORMAL** position.

g. During Flight.

1. After takeoff from a runway covered with snow or slush, it may be advisable to leave brake deice On to dislodge ice accumulated from the spray of slush or water. Monitor **BRAKE DEICE ON** annunciator for automatic termination of system operation and then turn the switch off. During flight, trim tabs and controls should also be exercised periodically to prevent freezing. Ensure that anti-icing systems are activated before entering icing conditions. Do not activate the surface deice system until ice has accumulated one-half to one inch. The propeller deice system operates effectively as an anti-ice system and it may be operated continuously in flight. If propeller imbalance due to ice does occur, it may be relieved by increasing RPM briefly, then returning to desired setting.

2. Ice vanes must be extended when operating in visible moisture or when freedom from visible moisture cannot be assured, at +5°C OAT or less. Ice vanes are designed as an anti-ice system, not a deice system. After the engine air inlet screens are blocked, extending the ice vanes will not rectify the condition. Ice vanes should be retracted at +15°C OAT and above to assure adequate engine oil cooling.

3. Stalling airspeeds should be expected to increase when ice has accumulated on the aircraft causing distortion of the wing airfoil. For the same reason, stall warning devices are not accurate and should not be relied upon. Keep a comfortable margin of airspeed above the normal stall airspeed. Maintain a minimum of 140 knots during sustained icing conditions to prevent ice accumulation on unprotected surfaces of the wing. In the event of windshield icing, reduce airspeed to 226 knots or below.

h. Descent. Use normal procedures in Section II. Brake deicing should be considered if moisture was encountered during previous ground operations or in flight, in icing conditions with gear extended.

i. Landing. Landing on an icy runway should be attempted only when absolutely necessary and should not be attempted unless the wind is within 10 degrees of runway heading. Application of brakes without skidding the tires on ice is difficult. In order not to impair pilot visibility, reverse thrust should be used with caution when landing on a runway covered with snow or standing water. Use procedures in Section II for normal landing,

j. Engine Shutdown. Use normal procedures in Section II.

k. Before Leaving Aircraft. When the aircraft is parked outside on ice or in a fluctuating freeze-thaw temperature condition, the following procedures should be followed in addition to the normal procedures in Section II. After wheel chocks are in place, release the brakes to prevent freezing. Fill fuel tanks to minimize condensation, remove any accumulation of dirt and ice from the landing gear shock struts, and install protective covers to guard against possible collection of snow and ice.

8-56. DESERT OPERATION AND HOT WEATHER OPERATION.

Dust, sand, and high temperatures encountered during desert operation can sharply reduce the operational life of the aircraft and its equipment. The abrasive qualities of dust and sand upon turbine blades and other moving parts of the aircraft and the destructive effect of heat upon the aircraft instruments will necessitate hours of maintenance if basic preventive measures are not followed. In flight, the hazards of dust and sand will be difficult to escape, since dust clouds over a desert may be found at altitudes up to 10,000 feet. During hot weather operations, the principal difficulties encountered are high turbine gas temperatures (ITT) during engine starting, overheating of brakes, and longer takeoff and landing rolls due to the higher density altitudes. In areas where high humidity is encountered, electrical equipment (such as communication equipment and instruments) will be subject to malfunction by corrosion, fungi, and moisture absorption by nonmetallic materials.

a. Preparation For Flight. Check the position of the aircraft in relation to other aircraft. Propeller sand blast can damage closely parked aircraft. Check that the landing gear shock struts are free of dust and sand. Check the instrument panel and general interior for dust and sand accumulation. Open main entrance door and cockpit vent storm windows to ventilate the aircraft.

CAUTION

N_1 speeds of 70% or higher may be required to keep oil temperatures within limits.

b. Engine Starting. Use normal procedures in Section II. Engine starting under conditions of high ambient temperatures may produce a higher than normal **ITT** during the start. The **ITT** should be closely monitored when the condition lever is moved to the **LOW IDLE** position. If overtemperature tendencies are encountered, the condition lever should be moved to **IDLE CUTOFF** position periodically during acceleration of gas generator RPM (N_1). Be prepared to abort the start before temperature limitations are exceeded.

c. Warm-Up Ground Tests. Use normal procedures in Section II. To minimize the possibility of damage to the engines during dusty/sandy conditions, activate ice vanes if the temperature is below +15°C.

d. Taxiing. Use normal procedures in Section II. When practical, avoid taxiing over sandy terrain to minimize propeller damage and engine deterioration that results from impingement of sand and gravel. During hot weather operation, use minimum braking action to prevent brake overheating.

e. Takeoff. Use normal procedures in Section II. Avoid taking off in the wake of another aircraft if the runway surface is sandy or dusty.

f. During Flight. Use normal procedures in Section II.

g. Descent. Use normal procedures in Section II.

h. Landing. Use normal procedures in Section II.

i. Engine Shutdown. Use normal procedures in Section II.

CAUTION

During hot weather, if fuel tanks are completely filled, fuel expansion may cause overflow, thereby creating a fire hazard.

j. Before Leaving Aircraft. Use normal procedures in Section II. Take extreme care to prevent sand or dust from entering the fuel and oil system during servicing. During hot weather, release the brakes immediately after installing wheel chocks to prevent brake disc warpage.

8-57. TURBULENCE AND THUNDERSTORM OPERATION.

CAUTION

Due to the comparatively light wing loading, control in severe turbulence and thunderstorms is critical. Since turbulence imposes heavy loads on the aircraft structure, make all necessary changes in aircraft attitude with the least amount of control pressures to avoid excessive loads on the aircraft structure.

Thunderstorms and areas of severe turbulence should be avoided. If such areas are to be penetrated, it will be necessary to counter rapid changes in attitude and accept major indicated altitude variations. Penetration should be at an altitude which provides adequate maneuvering margins as a loss or gain of several thousand feet of altitude may be expected. The recommended penetration speed in severe turbulence is 170 KIAS. Pitch attitude and constant power settings are vital to proper flight technique. Establish recommended penetration speed and proper attitude prior to entering turbulent air to minimize most difficulties. False indications by the pressure instruments due to barometric pressure variations within the storm make the instruments unreliable. Maintaining a pre-established attitude will result in a fairly constant airspeed. Turn cockpit and cabin lights on to minimize the blinding effects of lightning, Do not use autopilot altitude hold. Maintain constant power settings and pitch attitude regardless of airspeed or altitude indications. Concentrate on maintaining a level attitude by reference to the flight director/attitude indicator. Maintain original heading. Make no turns unless absolutely necessary.

8-58. ICE AND RAIN (TYPICAL).

WARNING

While in icing conditions, if there is an unexplained 30% increase of torque needed to maintain airspeed in level flight, a cumulative total of two or more inches of ice accumulation on the wing, an unexplained decrease of 15 knots IAS, or an unexplained deviation between pilot's and copilot's airspeed indicators, the icing environment should be exited as soon as practicable. Ice accumulation on the pitot tube assemblies could cause a complete loss of airspeed indication.

The following conditions indicate a possible accumulation of ice on the pitot tube assemblies and unprotected aircraft surfaces. If any of the following conditions are observed, the icing environment should be exited as soon as practicable.

1. Total ice accumulation of two inches or more on the wing surfaces. Determination of ice thickness can be accomplished by summing the estimated ice thickness on the wing prior to each pneumatic boot deice cycle (e.g., four cycles of minimum recommended one half inch accumulation).
2. A 30 percent increase in torque per engine required to maintain desired airspeed in level flight (not to exceed 85 percent torque) when operating at recommended holding/loiter speed.
3. A decrease in indicated airspeed of 15 knots after entering the icing condition (not slower than 1.4 power off stall speed) if maintaining original power setting in level flight. This can be determined by comparing pre-icing condition entry speed to the indicated speed after a surface deice cycle is completed.
4. Any variations from normal indicated airspeed between the pilot's and copilot's airspeed indicators.

a. *Typical Icing.* Icing occurs because of supercooled water vapor such as fog, clouds, or rain. The most severe icing occurs on aircraft surfaces in visible moisture or precipitation with a true outside air temperature between -5°C and +1°C; however, under some circumstances, dangerous icing conditions may be encountered with temperatures below -10°C. The surface of the aircraft must be at a temperature of freezing or below for ice to stick. If severe icing conditions are encountered, ascend or descend to altitudes where these conditions do not prevail. If flight into icing conditions is unavoidable, proper use of aircraft anti-icing and deicing systems may minimize the problems encountered. Approximately 15 minutes prior to flight into temperature conditions which could produce frost or icing conditions, the pilot and copilot windshield anti-ice switches should be set at **NORMAL** or **HIGH** temperature position (after preheating) as necessary to eliminate windshield ice. Stalling airspeeds should be expected to increase when ice has accumulated on the aircraft causing distortion of the wing airfoil. For the same reason, stall warning devices are not accurate and should not be relied upon. Keep a comfortable margin of airspeed above the normal stall airspeed with ice on the aircraft. Maintain a minimum of 140 knots during sustained icing conditions to prevent ice accumulation on unprotected surfaces of the wing. In the event of windshield icing, reduce airspeed to 226 knots or below.

b. Rain. Rain presents no particular problems other than slippery runways, restricted visibility, and occasional incorrect airspeed indications.

c. Taxiing. Extreme care must be exercised when taxiing on ice or slippery runways. Excessive use of either brakes or power may result in an uncontrollable skid.

d. Takeoff Extreme care must be exercised during takeoff from ice or slippery runways. Excessive use of either brakes or power may result in an uncontrollable skid.

e. Climb. Keep aircraft attitude as flat as possible and climb with higher airspeed than usual, so that the lower surfaces of the aircraft will not be iced by flight at a high angle of attack.

f. Cruise Flight. Prevention of ice formation is far more effective and satisfactory than attempts to dislodge the ice after it has formed. If icing conditions are inadvertently encountered, turn on the anti-icing systems prior to the first sign of ice formation. Do not operate deicer boots continuously. Allow at least one half inch of ice on the wing deicer boots before activating the deicer boots. Continued flight in severe icing conditions should not be attempted. If ice forms on the wing area aft of the deicer boots, climb or descend to an altitude where conditions are less severe.

g. Landing. Extreme care must be exercised when landing on ice or slippery runways. Excessive use of either brakes or power may result in an uncontrollable skid. Ice accumulation on the aircraft will result in higher stalling airspeeds due to the change in aerodynamic characteristics and increased weight of the aircraft due to ice buildup. Approach and landing airspeeds must be increased accordingly.

8-59. ICING (SEVERE).

a. The following weather conditions may be conducive to severe in-flight icing:

(7) Visible rain at temperatures below zero degrees Celsius ambient air temperature.

(2) Droplets that splash or splatter on impact at temperatures below zero degrees Celsius ambient air temperature.

b. The following procedures for exiting a severe icing environment are applicable to all flight phases from takeoff to landing.

(7) Monitor the ambient air temperature. While severe icing may form at temperatures as cold as -18 degrees Celsius, increased vigilance is warranted at temperatures around freezing with visible moisture present.

(2) Upon observing the visual cues specified in the limitations section of this manual for the identification of severe icing conditions (reference paragraph 5-35), accomplish the following:

(a) Immediately request priority handling from air traffic control to facilitate a route or an altitude change to exit the severe icing conditions in order to avoid extended exposure to flight conditions more severe than those for which the aircraft has been certificated.

(b) Avoid abrupt and excessive maneuvering that may exacerbate control difficulties.

(c) Do not engage the autopilot.

(d) If the autopilot is engaged, hold the control wheel firmly and disengage the autopilot.

(e) If an unusual roll response or uncommanded roll control movement is observed reduce the angle-of-attack,

(f) Do not extend flaps during extended operation in icing conditions. Operations with flaps extended can result in a reduced angle-of-attack, with the possibility of ice forming on the upper surface further aft on the wing than normal, possibly aft of the protected area.

(g) If the flaps are extended, do not retract them until the airframe is clear of ice.

(h) Report these weather conditions to air traffic control.

Section VI. CREW DUTIES.

★8-60. CREW/PASSENGER BRIEFING.

The following guide should be used in accomplishing the required passenger briefings. Items that do not pertain to a specific mission may be omitted.

1. Crew introduction.
2. Equipment.
   a. Personnel to include ID tags.
   b. Professional (medical equipment, etc.).
   c. Survival.
3. Flight data.
   a. Route.
   b. Altitude.
   c. Time enroute.
   d. Weather.
4. Normal procedures.
   a. Entry and exit of aircraft.
   b. Seating and seat position.
   c. Seat belts.
   d. Movement in aircraft.
   e. Internal communications.
   f. Security of equipment.
   g. Smoking.
   h. Oxygen.
   i. Refueling.
   j. Weapons and prohibited items.
   k. Protective masks.
   l. Toilet.
   m. Polarized windows.
5. Emergency procedures.
   a. Emergency exits.
   b. Emergency equipment.
   c. Emergency landing/ditching procedures.

★8-61. DEPARTURE BRIEFING.

The following is a guide that should be used as applicable in accomplishing the required crew briefing prior to takeoff; however, if the crew has operated together previously (thru-flight) and the pilot is certain that the copilot understands all items of the briefing, the pilot may omit the briefing by stating "STANDARD BRIEFING" when the briefing is called for during the BEFORE TAKEOFF CHECK.

1. ATC clearance - Review.
   a. Routing.
   b. Initial altitude.
2. Departure procedure - Review.
   a. SID.
   b. Noise abatement procedure.
   c. VFR departure route.
3. Copilot duties - Review.
   a. Adjust takeoff power.
   b. Monitor engine instruments.
   c. Power check at 65 knots.
   d. Call out engine malfunctions.
   e. Tune/identify all nav/comm radios.
   f. Make all radio calls.
   g. Adjust transponder and radar as required.
   h. Complete flight log during flight (note altitudes and headings).
   i. Note departure time.
4. PPC - Review.
   a. Takeoff power.
   b. V_R
   c. V_Y (climb to 500' AGL).
   d. V_{YSE}

★8-62. ARRIVAL BRIEFING.

The following is a guide that should be used as applicable in accomplishing the required crew briefing prior to landing; however, if the crew has operated together previously (thru-flight) and the pilot is certain that the copilot

understands all items of the briefing, the pilot may omit the briefing by stating “STANDARD BRIEFING” when the briefing is called for during the DESCENT-ARRIVAL CHECK.

1. Weather/altimeter setting.
2. Airfield/facilities - Review.
   a. Field elevation,
   b. Runway length.
   c. Runway condition.
3. Approach procedure - Review.
   a. Approach plan/profile.
   b. Altitude restrictions.
   c. Missed approach.
      (1) Point.
      (2) Time.
      (3) intentions.
   d. Decision height or MDA.
   e. Lost communications.
4. Backup approach/frequencies.
5. Copilot duties - Review.
   a. Nav/comm set-up.
   b. Monitor altitude and airspeeds.
   c. Monitor approach.
   d. Call out visual/field in sight.
6. Landing performance data - Review.
   a. Approach speed.
   b. Runway required.
7. Passenger briefing - As required.

CHAPTER 9
EMERGENCYPROCEDURES

Section I. AIRCRAFT SYSTEMS

9-1. AIRCRAFT SYSTEMS.

This section describes the aircraft systems emergencies that may reasonably be expected to occur and presents the procedures to be followed. Emergency procedures are given in checklist form when applicable. A condensed version of these procedures is contained in the Operator's and Crewmember's Checklist, TM 1-1510-225-CL. Emergency operation of avionics equipment is covered. in Chapter 3, AVIONICS, and is repeated in this section only if safety of flight is affected.

9-2. IMMEDIATE ACTION EMERGENCY CHECKS.

Immediate action emergency items are underlined for reference and shall be committed to memory.

NOTE

The urgency of certain emergencies requires immediate action by the crew. The most important single consideration is aircraft control. All procedures are subordinate to this requirement. Reset **MASTER CAUTION/MASTER WARNING** after each malfunction to allow systems to respond to subsequent malfunctions.

9-3. DEFINITION OF LANDING TERMS.

The term LAND AS SOON AS POSSIBLE is defined as landing at the nearest suitable landing area (e.g., open field) without delay. (The primary consideration is to ensure the survival of the occupants.)

The term LAND AS SOON AS PRACTICABLE is defined as landing at a suitable landing area. (The primary consideration is the urgency of the emergency.)

9-4. AFTER EMERGENCY ACTION.

After a malfunction has occurred, appropriate emergency actions have been taken, and the aircraft is on the ground, make an entry in the remarks section of DA Form 2408-13 describing the malfunction.

9-5. EMERGENCY EXITS AND EQUIPMENT.

Emergency exits and equipment are shown in Figure 9-1.

9-6. EMERGENCY ENTRANCE.

Entry can be made through the cabin emergency hatch (fig. 9-1). The hatch can be released by pulling on its flush-mounted, pull-out handle, placarded **EMERGENCY EXIT - PULL HANDLE TO RELEASE.** The hatch is of the non-hinged, plug type, which removes completely from the frame when the latches are released. After the latches are released, the hatch may be pushed into the aircraft.

9-7. ENGINE MALFUNCTION.

a. flight Characteristics Under Partial Power Conditions. There are no unusual flight characteristics during single-engine operation as long as airspeed is maintained above minimum control speed (V_{MC}) and power-off stall speed. The capability of the aircraft to climb or maintain level flight depends on configuration, weight, altitude, and free air temperature. Performance and aircraft control will improve by feathering the propeller of the inoperative engine, retracting the landing gear and flaps, and establishing the appropriate airspeed.

b. Engine Malfunction During and After Take-Off. The action to be taken in the event of an engine malfunction during takeoff depends upon whether or not liftoff speed (V_{LOF}) has been attained. If an engine fails immediately after liftoff, many variables such as airspeed, runway remaining, aircraft weight, altitude, and single-engine performance must be considered in deciding whether it is safer to land or continue flight.

c. Engine Malfunction Before Liftoff (Abort). If an engine fails and the aircraft has not accelerated to recommended liftoff speed (V_{LOF}), retard **POWER** levers to **IDLE** and stop the aircraft. Perform the following:

1. **POWER** lever - **IDLE.**
2. Braking - As required.

NOTE

If insufficient runway remains for stopping, perform steps 3 thru 5.

3. **CONDITION** levers - **FUEL CUTOFF.**
4. Fuel **FIREWALL SHUTOFF VALVES - CLOSED.**
5. **MASTER SWITCH - OFF.**

d. Engine Failure After Liftoff (Abort). If engine fails after liftoff, sufficient runway remains, and a safe

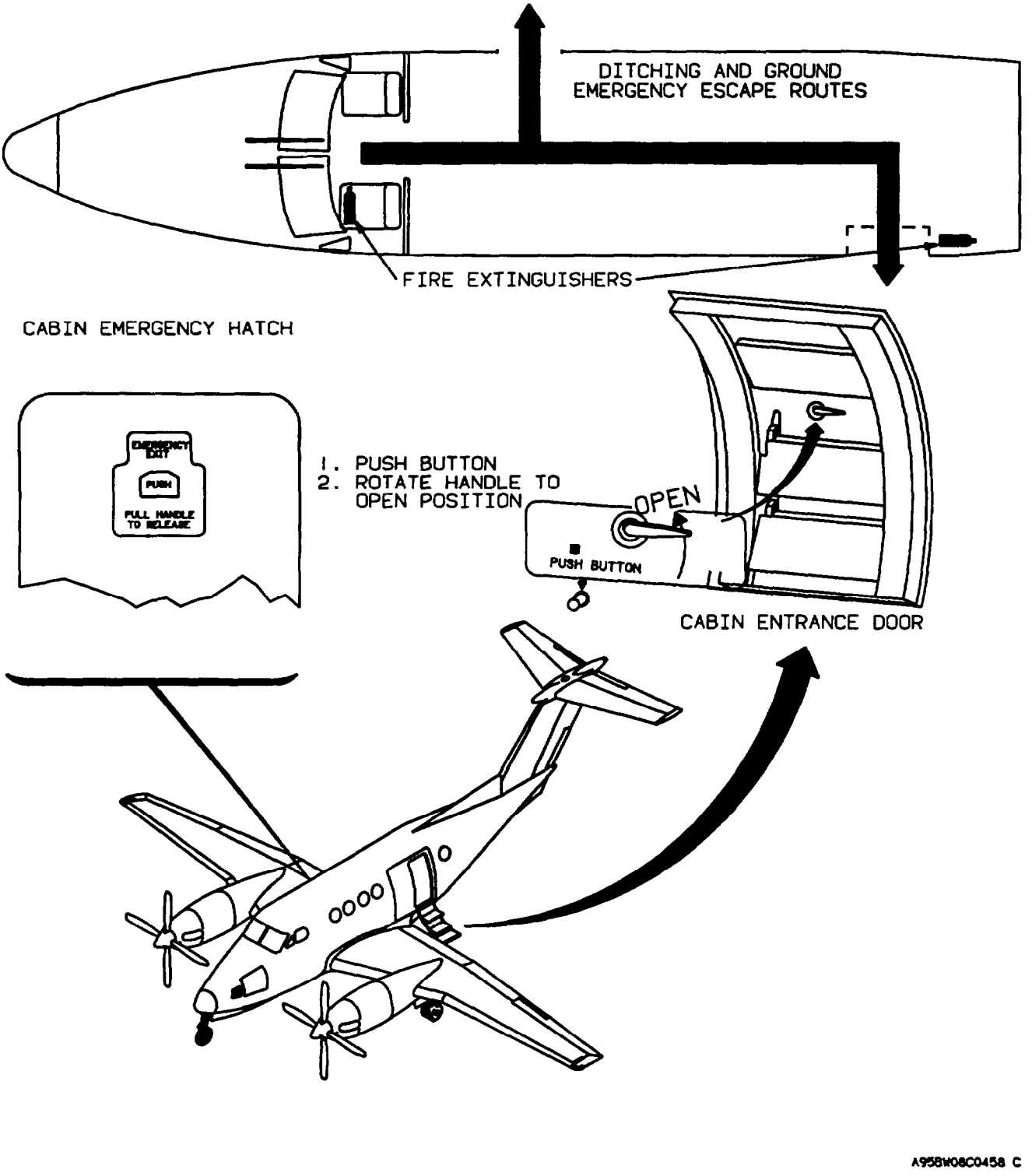

Figure 9-1. Emergency Exits and Equipment

landing can be accomplished, perform the following procedure:

1. **POWER** levers - Reduce.
2. **GEAR - DN.**
3. Normal landing - Complete.

NOTE

If insufficient runway remains for stopping after touchdown, perform steps 4 thru 6:

4. **CONDITION** levers - **FUEL CUTOFF.**
5. Fuel **FIREWALL SHUTOFF VALVES - CLOSED.**
6. **MASTER SWITCH - OFF.**

e. Engine Ma/function After Liftoff, inoperative Autofeather (Flight Continued). Perform the following:

1. Power - Maximum Allowable.

NOTE

If airspeed is below V_{YSE}, maintain whatever airspeed has been attained (between V_{LOF} and V_{ySE}) until sufficient altitude can be obtained to trade off altitude for airspeed to assist in acceleration to V_{YSE}.

2. Dead engine - Identify.
3. **POWER** lever (dead engine) - **IDLE.**
4. **PROP** lever (dead engine) - **FEATHER.**
5. **GEAR - UP.**

NOTE

If takeoff was made with flaps extended, ensure airspeed is above V_{REF} before retracting flaps.

6. **FLAPS - UP.**
7. **LANDING LIGHTS - OFF.**
8. **BRAKE DEICE - OFF.**
9. Engine cleanup - Perform.

NOTE

Holding three to five degrees bank (1/4 to 1/2 ball width) towards the operating engine will assist in maintaining directional control and improving aircraft performance.

f. Engine Malfunction After Liftoff, Operating Autofeather (Flight Continued). Perform the following:

1. Power - Maximum Allowable.

NOTE

If airspeed is below V_{YSE}, maintain whatever airspeed has been attained (between V_{LOF} and V_{ySE}) until sufficient altitude can be obtained to trade off altitude for airspeed to assist in acceleration to V_{YSE}.

Do not retard the malfunctioning engine power lever, or turn the autofeather system off, until propeller rotation is completely stopped. To do so will deactivate the autofeather circuit and prevent automatic feathering.

2. **GEAR - UP.**

NOTE

If takeoff was made with flaps extended, ensure airspeed is above V_{REF}, before retracting flaps.

3. **FLAPS - UP.**
4. **LANDING LIGHTS - OFF.**
5. **BRAKE DEICE - OFF.**
6. Engine cleanup - Perform.

NOTE

Holding three to five degrees bank (1/4 to 1/2 ball width) toward the operating engine will assist in maintaining directional control and improving aircraft performance.

g. Engine Malfunction During Flight. If an engine malfunctions during cruise flight, maintain control of the aircraft while maintaining heading or turn as required. Add power as required to keep airspeed from decaying excessively and to maintain altitude. Identify the failed engine by feel (if holding rudder pressure to keep the aircraft from yawing, the rudder being pressed indicates the good engine) and engine instruments, then confirm identification by retarding **POWER** lever of the suspected failed engine. Refer to Chapter 7 for ONE ENGINE INOPERATIVE cruise information. If one engine malfunctions during flight, perform the following:

1. Autopilot/yaw damper - Disengage.
2. Power - As required.
3. Dead engine - Identify.
4. **POWER** lever (dead engine) - **IDLE.**
5. **PROP** lever (dead engine) - **FEATHER.**

6. **GEAR - UP.**

7. **FLAPS** - As required.

8. Power - Set for single-engine cruise.

9. Engine cleanup - Perform.

NOTE

At V_{YSE} speeds, holding three to five degrees bank (1/4 to 1/2 ball width) towards the operating engine will assist in maintaining directional control and improving aircraft performance.

h. Engine Malfunction During Final Approach. If an engine malfunctions during final approach (after LANDING CHECK) the propeller should not be manually feathered unless time and altitude permit or conditions require it. Continue approach using the following proce dure:

1. Power - As required.

2. **GEAR - DN.**

i. Engine Ma/function (Second Engine). If the second engine fails, do not feather the propeller if an engine restart is to be attempted. Engine restart without starter assist cannot be accomplished with a feathered propeller, and the propeller will not unfeather without the engine operating. The airspeed to fly will depend upon whether or not a restart will be attempted, and whether or not the restart attempt will be accomplished with or without starter assist. If no restart is to be attempted, use maximum glide speed from Figure 9-2. Perorm the following procedure if the second engine fails during cruise flight.

1. Airspeed - As required.

2. **POWER** lever - **IDLE.**

3. **PROP** lever - Do not **FEATHER.**

4. Engine restart procedure - Conduct.

9-8. ENGINE SHUTDOWN IN FLIGHT.

If it becomes necessary to shut an engine down during flight, perform the following:

1. **POWER** lever - **IDLE.**

2. **PROP** lever - **FEATHER.**

3. **CONDITION** lever - **FUEL CUTOFF**

4. Engine cleanup - Perform.

9-9. ENGINE CLEANUP.

The cleanup procedure to be used after engine malfunction, shutdown, or an unsuccessful restart is as follows:

1. **CONDITION** lever - **FUEL CUTOFF.**

2. **ENG AUTO IGNITION** switch - **OFF.**

3. **AUTOFEATHER** switch - **OFF.**

4. **GEN** switch - **OFF.**

9-10. ENGINE RESTART DURING FLIGHT (USING STARTER).

Engine restarts may be attempted at all altitudes, If a restart is attempted, perform the following:

CAUTION

The pilot should determine the reason for engine failure before attempting an airstart. Do not attempt an airstart if N_1 indicates zero.

1. **CABIN TEMP MODE** switch - **OFF.**

2. Electrical load - Reduce to minimum.

3. Fuel **FIREWALL SHUTOFF VALVE - OPEN.**

4. **POWER** lever - **IDLE.**

5. **PROP** lever - **FEATHER.**

6. **CONDITION** lever - **FUEL CUTOFF.**

7. **ITT** (operating engine) - 700°C or less.

8. **IGNITION AND ENGINE START switch - ON.**

9. **CONDITION** lever - **LOW IDLE.**

NOTE

If a rise in **ITT** does not occur within 10 seconds after moving the **CONDITION** lever to **LOW IDLE,** abort the start.

10. ITT - 1000°C, 5 seconds maximum.

NOTE

If N_1 is below 12%, starting temperatures tend to be higher than normal. To preclude overtemperature (1000°C or above) during engine acceleration to idle speed, periodically move the **CONDITION** lever into **FUEL CUTOFF** position as necessary.

11. Oil pressure - Check.

12. **IGNITION AND ENGINE START** switch - **OFF** at 50% N_1.

13. **GEN** switch - **RESET,** then ON.

14. Engine cleanup - Perform if engine restart is unsuccessful.

15. **CABIN TEMP MODE** switch - As required.

16. Electrical equipment - As required.

17. **ENG AUTO IGNITION** switch - **ARM.**

18. **PROP SYN** switch - As required.

19. Power - As required.

9-11. ENGINE RESTART DURING FLIGHT (NOT USING STARTER).

A restart without starter assist may be accomplished provided airspeed is at or above 140 KIAS, altitude is below 20,000 feet, and the propeller is not feathered. If altitude permits, diving the aircraft will increase N_1 and assist in restart.

1. **CABIN TEMP MODE** switch - **OFF.**

2. Electrical load - Reduce to minimum.

3. **GEN** switch (affected engine) - **OFF.**

4. Fuel **FIREWALL SHUTOFF VALVE - OPEN.**

5. **POWER** lever - **IDLE.**

6. **PROP** lever - **HIGH RPM.**

7. **CONDITION** lever - **FUEL CUTOFF.**

8. Airspeed - 140 KIAS minimum.

9. Altitude - Below 20,000 feet.

10. **ENG AUTO IGNITION** switch - **ARM.**

11. **CONDITION** lever - **LOW IDLE.**

NOTE

If a rise in **ITT** does not occur within 10 seconds after moving the **CONDITION** lever to **LOW IDLE,** abort the start.

12. **ITT** - 1000°C. 5 seconds maximum.

13. Oil pressure - Check.

14. **GEN** switch - **RESET,** then **ON.**

15. Engine cleanup - Perform if engine restart is unsuccessful.

16. **CABIN TEMP MODE** switch - As required.

17. Electrical equipment - As required.

18. **ENG AUTO IGNITION** switch - **ARM.**

19. Propellers - Synchronized.

20. Power - As required.

NOTE

If N_1 is below 12% starting temperatures tend to be higher than normal. To preclude overtemperature (1000°C or above) during engine acceleration to idle speed, periodically move the **CONDITION** lever into **FUEL CUTOFF** position as necessary.

9-12. SINGLE-ENGINE DESCENT/ARRIVAL.

NOTE

Approximately 85% N_1 is required to maintain pressurization schedule.

Perform the following procedure prior to the descent for landing.

1. Cabin pressurization controller - Set.

2. **CABIN** signs switch - As required.

3. Ice and rain switches - As required.

4. Windshield heat - As required.

5. Altimeters - Set

6. **RECOG** lights - On.

★7. Arrival briefing - Complete (refer to Chapter 8, Section VI).

9-13. SINGLE-ENGINE BEFORE LANDING.

1. **CABIN** signs switch - **NO SMOKE & FSB.**

2. Engine anti-ice/ice vanes - As required.

3. **PROP** lever - As required.

NOTE

During approach, propeller should be set at 1900 RPM to prevent glideslope interference (ILS approach), provide better power response during approach, and minimize attitude change when advancing propeller lever for landing.

4. **FLAPS - APPROACH.**

5. **GEAR - DN.**

6. **LANDING LIGHTS** - As required.

7. **BRAKE DEICE** switch - **OFF.**

9-14. SINGLE-ENGINE LANDING CHECK.

Perform the following procedure during final approach to runway.

1. AP/YD - Disengage.

2. **GEAR DOWN** lights - Check.

3. **PROP** lever (operative engine) - **HIGH RPM.**

NOTE

To ensure consistant reversing characterstics, the propeller control must be in the **HIGH RPM** Position.

9-15. SINGLE-ENGINE GO-AROUND.

The decision to go around must be made as early as possible. Elevator forces at the start of the go-around are very high, and a considerable amount of rudder control will also be required at low airspeeds. Retrim as required. If rudder application is insufficient, or applied too slowly, directional control cannot be maintained. If control difficulties are experienced, reduce power on the operating engine immediately. Ensure the aircraft will not touch the ground before retracting the landing gear. Retract the flaps only as safe airspeed permits. Maintain flaps in the takeoff position until V_{REF}, then retract to UP. Perform single-engine go-around as follows:

NOTE

Once flaps are fully extended, a single-engine go-around may not be possible when close to ground under conditions of high gross weights and/or high density altitude.

1. Power - Maximum Allowable.

2. **GEAR-UP.**

3. **FLAPS-As** required.

4. **LANDING LIGHTS - OFF.**

5. Power - As required.

6. Yaw damp - As required.

9-16. MAXIMUM GLIDE.

In the event of failure of both engines, maximum glide distance can be obtained by feathering both propellers to reduce propeller drag and by maintaining the appropriate airspeed with the gear and flaps up. Figure 9-2 gives the approximate gliding distances in relation to altitude.

9-17. LANDING WITH TWO ENGINES INOPERATIVE.

Maintain best glide speed (fig. 9-2). If sufficient altitude remains after reaching a suitable landing area, a circular pattern will provide best observation of surface conditions, wind velocity, and direction. When the condition of the terrain has been noted and landing area selected, set up a rectangular pattern. Extending **APPROACH** flaps and landing gear early in the pattern will give an indication of glide performance sooner and will allow more time to make adjustments for the added drag. Select a landing area of adequate size to accommodate the aircraft, preferably free of obstacles and smooth. Fly the base leg as necessary to control the point of touchdown. Plan to overshoot rather than undershoot, then use flaps as necessary to arrive at the selected landing point. Keep in mind that, with both pro pellers feathered, the normal tendency is to overshoot due to less drag. In the event a positive gear-down indication cannot be determined, and unless the surface of the landing area is hard and smooth, the landing should be made with the landing gear up. If landing on rough terrain, land in a tail-low attitude to keep the nacelles from digging in. If possible, land with flaps fully extended.

9-18. LOW OIL PRESSURE.

In the event of a low oil pressure indication, perform procedures as applicable:

1. Torque - 49% maximum (oil pressure below 100 PSI below 21,000 feet or below 85 PSI above 21,000 feet).

2. Oil pressure below 60 PSI - Perform engine shutdown, or land as soon as practicable using minimum power to ensure safe arrival.

9-19. CHIP DETECT CAUTION LIGHT ILLUMINATED.

If the **L CHIP DETECT** or **R CHIP DETECT** caution annunciator illuminates, and safe single-engine flight can be maintained, perform engine shutdown.

9-20. DUCT OVERTEMP CAUTION LIGHT ILLUMINATED.

Ensure the cabin floor outlets are open and unobstructed, then perform the following steps in sequence until the annunciator is extinguished. Allow approximately 30 seconds after each adjustment for the system temperature to stabilize. The over-temperature condition is considered to be corrected at any point during the procedure that the light goes out.

MAXIMUM GLIDE DISTANCE

STANDARD DAY (ISA)

ASSOCIATED CONDITIONS:
POWER . . . . . BOTH ENGINES INOPERATIVE
PROPELLERS . . . . FEATHERED
LANDING GEAR . . UP
FLAPS . . . . . UP (0%)
AIRSPEED . . . . . IAS AS TABULATED
WIND. . . . . ZERO KNOTS

EXAMPLE:
HEIGHT ABOVE TERRAIN . . . . . 12,000 FT
WEIGHT . . . . . 13,000 LBS
MAXIMUM GLIDE DISTANCE . . . 28.3 NM
BEST GLIDE SPEED . . . . . 125 KIAS

WEIGHT ~ POUNDS	BEST GLIDE SPEED ~ KNOTS
14,000	130
13,000	125
12,500	123
11,000	115
10,000	110
9,000	105

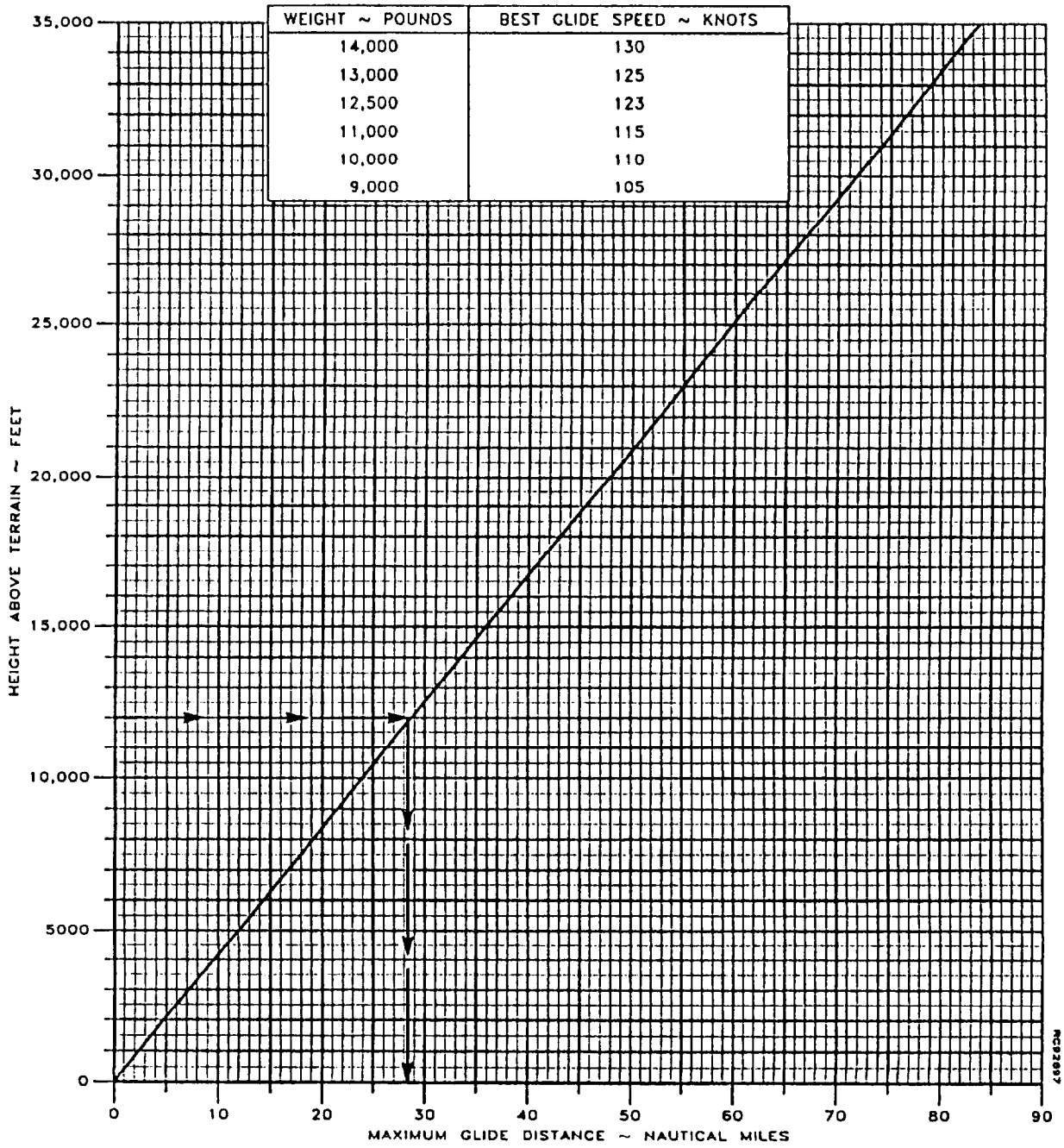

Figure 9-2. Maximum Glide Distance

1. **CABIN/COCKPIT AIR** control - In.
2. **CABIN TEMP MODE** switch - **AUTO.**
3. **CABIN TEMP** switch - Decrease.
4. **VENT BLOWER** switch - **HIGH.**
5. **CABIN TEMP MODE** switch - **MAN HEAT.**
6. **CABIN TEMP** switch - Decrease (hold).
7. **LEFT BLEED AIR VALVE** switch - **PNEU & ENVIR OFF.**
8. Light still illuminated (after 30 seconds) - **LEFT BLEED AIR VALVE** switch - **OPEN.**
9. **RIGHT BLEED AIR VALVE** switch - **PNEU & ENVIR OFF.**
10. Light still illuminated (after 30 seconds) - **RIGHT BLEED AIR VALVE** switch - **OPEN.**

NOTE

If the **DUCT OVERTEMP** light has not extinguished after completing the above procedure, the warning system has malfunctioned.

9-21. ENGINE ANTI-ICE FAILURE (L OR R ENG ICE FAIL ANNUNCIATOR ILLUMINATED, C-12R).

1. **ENGINE ANTI-ICE ACTUATOR switch - STANDBY.**

IF **ENG ICE FAIL** ANNUNCIATOR DOES NOT EXTINGUISH:

2. Icing conditions - Exit. Assume engine anti-ice is still on for performance calculations.

9-22. PARAGRAPH DELETED.

9-23. ENGINE BLEED AIR SYSTEM MALFUNCTION.

a. L or R BL AIR FAIL Annunciator Illuminated. Steady illumination of the warning annunciator in flight indicates a possible ruptured bleed air line aft of the engine firewall. The annunciator will remain illuminated for the remainder of flight. Perform the following:

NOTE

BL AIR FAIL annunciators may momentarily illuminate during simultaneous surface deice and brake &ice operation at low N_1 speed.

1. **BRAKE DEICE** switch - **OFF.**
2. **ITT** and **TORQUE** - Monitor (note readings).
3. **BLEED AIR VALVE** switch - **OFF.**

NOTE

Brake deice (on the affected side), and rudder boost will not be available with bleed air valve switch off.

4. Cabin pressurization - Check.

b. Excessive Differential Pressure. If cabin differential pressure exceeds 6.6 PSI, perform the following:

1. Cabin pressurization controller - Select higher setting.

IF CONDITION PERSISTS:

2. Oxygen, crew and passengers - As required.
3. **LEFT BLEED AIR VALVE switch - ENVIR OFF.**

IF CONDITION STILL PERSISTS:

4. **RIGHT BLEED AIR VALVE switch - ENVIR OFF.**
5. Descend - As required.

IF CONDITION STILL PERSISTS:

6. Oxygen masks - 100% and on.
7. **CABIN PRESS** switch - **DUMP.**
8. **BLEED AIR VALVE** switches - **OPEN** (if cabin heating is required).

9-24. LOSS OF PRESSURIZATION (ABOVE 10,000 FEET).

If cabin pressurization is lost when operating above 10,000 feet or the **ALT WARN** warning annunciator illuminates, perform the following:

1. Crew oxygen masks - 100% and on.

2. Passenger oxygen - On. Check to ensure all passengers have oxygen masks on and are receiving supplemental oxygen if required.

9-25. DOOR UNLOCKED WARNING ANNUNCIATOR ILLUMINATED.

Remain clear of cabin door and perform the following:

1. **CABIN** signs switch - **NO SMOKE & FSB.**

2. **BLEED AIR VALVE** switches - **ENVIR OFF.**

3. Altitude - Descend below 14,000 feet as soon as practicable.

4. Oxygen - As required.

9-26. PROPELLER FAILURE (OVER 2080 RPM).

If an overspeed condition occurs that cannot be controlled with the PROP lever or by reducing power, perform the following:

1. **POWER** lever (affected engine) - **IDLE.**

2. **PROP** lever - **FEATHER.**

3. **CONDITION** lever - As required.

4. Engine cleanup - As required.

9-27. FIRE.

The safety of aircraft occupants is the primary consideration when a fire occurs; therefore, it is imperative that every effort be made by the flight crew to put the fire out. On the ground it is essential that the engines be shut down, crew and passengers evacuated, and fire fighting begun immediately. If the aircraft is airborne when a fire occurs, the most important single action that can be taken by the pilot is to land safely as soon as possible.

a. Engine Fire. The following procedures shall be performed in case of engine fire.

(1) Engine/Nacelle Fire During Start or Ground Operations. If engine/nacelle fire is identified during start or ground operation, perform the following:

1. **CONDITION** levers - **FUEL CUT-OFF.**

2. **PROP** levers - **FEATHER.**

3. Fuel **FIREWALL SHUTOFF VALVES - CLOSED.**

CAUTION

If fire extinguisher has been used to extinguish an engine fire, do not attempt to restart until maintenance Personnel have inspected the aircraft and released it for flight.

O 4. **PUSH TO EXTINGUISH** switch - Push.

5. **MASTER SWITCH - OFF.**

(2) Engine Fire In Flight (ENG FIRE Light Illuminated). If an engine fire is suspected in flight, perform the following:

1. **POWER** lever - **IDLE.**

2. **ENG FIRE** light out - Advance power.

3. **ENG FIRE** light illuminated - Perform engine fire in flight procedures (identified).

(3) Engine Fire In Flight (Identified). If an engine fire is confirmed in flight, perform the following:

CAUTION

Due to the possibilities of fire warning malfunctions, the fire should be visually identified before the engine is secured and the extinguisher actuated.

1. **POWER** lever - **IDLE.**

2. **PROP** lever - **FEATHER.**

3. **CONDITION** lever - **FUEL CUT-OFF.**

4. Fuel **FIREWALL SHUTOFF VALVE - CLOSED.**

O 5. Fire extinguisher - Actuate as required.

6. Engine cleanup - Perform.

7. Land as soon as practicable.

b. Fuse/age Fire. If a fuselage fire occurs, perform the following:

WARNING

The extinguishing agent (bromochlorodifluoromethane) in the fire extinguisher can produce toxic effects if inhaled.

1. Fight the fire.
2. Land as soon as possible.

c. Wing Fire. There is little that can be done to control a wing tire except to shut off fuel and electrical systems that may be contributing to the fire, or which could aggravate it. Diving and slipping the aircraft away from the burning wing may help. If a wing fire occurs, perform the following:

1. Perform engine shutdown on affected side.
2. Land as soon as possible.

d. Electrical Fire. Upon noting the existence or indications of an electrical fire, turn off all affected electrical circuits, if known. If electrical fire source is unknown, perform the following:

1. Crew oxygen masks - As required
2. Passenger oxygen - As required.
3. **MASTER SWITCH - OFF** (visual conditions only).
4. All nonessential electrical equipment - Off.

NOTE

With the loss of DC electrical power, the aircraft will depressurize. All engine instruments, with the exception of **PROP RPM, N_1 RPM,** and **ITT** gages, will be inoperative.

5. **BATT** switch - **ON.**
6. **GEN** switches (individually) - **RESET,** then **ON.**
7. Circuit breakers - Check for indication of defective circuit.

CAUTION

As each electrical switch is returned to **ON,** note loadmeter reading, and check for evidence of fire.

8. Essential electrical equipment - On (individually until fire source is isolated).
9. Land as soon as practicable.

e. Smoke and Fume Elimination. To eliminate smoke and fumes from the aircraft, perform the following:

1. Crew oxygen masks - **100%** and on.
2. Passenger oxygen - On.
3. **BLEED AIR VALVE** switches - **PNEU & ENVIR OFF**
4. **VENT BLOWER** switch - **AUTO.**
5. **AFT. BLOWER** switch - **OFF.**
6. **CABIN TEMP MODE** switch - **OFF.**
7. If smoke and fumes are not eliminated: **CABIN PRESS** switch - **DUMP.**

NOTE

Opening storm window (after depressurizing) will facilitate smoke and fume removal (C-12R).

8. Passenger oxygen masks - Check Confirm that all passengers are receiving supplemental oxygen.
9. Engine oil pressure - Monitor.

9-26. FUEL SYSTEM.

a. FUEL PRESS Warning Light Illuminated. Illumination of the **L** or R **FUEL PRESS** warning light usually indicates failure of the respective engine-driven boost pump. Perform the following:

1. **STANDBY PUMP** switch - **ON.**
2. **FUEL PRESS** light out - Check.
3. **FUEL PRESS** light still illuminated - Record unboosted time.

b. NO TRANSFER Indicator light illuminated (Fuel Panel). Illumination of a **NO TRANSFER** indicator light with fuel remaining in the respective auxiliary fuel tank indicates a failure of that automatic fuel transfer system. Proceed as follows:

1. **AUX TRANSFER** switch (affected side) - **OVERRIDE.**
2. Auxiliary fuel quantity - Monitor.
3. **AUX TRANSFER** switch (after respective auxiliary fuel has completely transferred) - **AUTO.**

c. Nacelle Fuel Leak. If nacelle fuel leaks are evident, perform the following:

1. Perform engine shutdown
2. Fuel **FIREWALL SHUTOFF VALVE - CLOSED.**
3. Land as soon as practicable.

d. Fuel Crossfeed. Fuel crossfeed is normally used only during single-engine operation. The fuel from the inoperative engine side may be used to supply the operative engine by routing the fuel through the crossfeed system. During extended flights, this method of fuel usage will provide a more balanced lateral load condition in the aircraft. For fuel crossfeed, use the following procedure:

1. **AUX TRANSFER** switches - **AUTO.**

NOTE

With the Fuel **FIREWALL SHUTOFF VALVE CLOSED,** fuel in the auxiliary tank for that side will not be available (usable) for crossfeed.

2. **STANDBY PUMP(S) - OFF.**
3. **CROSSFEED FLOW** - As required.
4. **FUEL CROSSFEED** annunciator illuminated - Check.

NOTE

With the Fuel **FIREWALL SHUTOFF VALVE CLOSED, the FUEL PRESS** annunciator will remain illuminated on the side supplying fuel.

5. **FUEL PRESS** annunciator extinguished - Check.
6. Fuel quantity - Monitor.

O e. NAC LOW Light Illuminated. Illumination of the **#1 or #2 NAC LOW** caution light indicates that the affected tank has 30 minutes of usable fuel remaining at sea level, at normal cruise power consumption rate. Proceed as follows:

WARNING

Failure of the fuel tank venting system will prevent the fuel in the wing tanks from gravity feeding into the nacelle tank. Fuel vent system failure may be indicated by illumination of the **#1** or **#2 NAC LOW** caution light with greater than 30 minutes of usable fuel indicated in the main tank fuel system. The total usable fuel remaining in the main fuel supply system with a **NAC LOW** caution light illuminated may be as little as 114 pounds, regardless of the total fuel quantity indicated. Continued flight may result in engine flameout due to fuel starvation.

1. Usable fuel remaining - Confirm.
2. Land as soon as possible.

9-29. ELECTRICAL SYSTEM EMERGENCIES.

a. DC GEN Light Illuminated. Illumination of **L DC GEN** or **R DC GEN** caution light indicates failure of a generator or one of its associated circuits. If one generator system becomes inoperative, all nonessential electrical equipment should be used judiciously to avoid overloading the remaining generator. If both generators are shut off due to either generator system failure or engine failure, all nonessential equipment should be turned Off to preserve battery power for extending the landing gear and flaps. When a **L DC GEN or R DC GEN** light illuminates, perform the following:

1. **GEN** switch - **OFF, RESET,** then **ON.**

IF THE GENERATOR DOES NOT RESET:

2. **GEN** switch - **OFF.**
3. Operating loadmeter - 100% maximum.

b. Both DC GEN Lights Illuminated.

1. All nonessential equipment - Off.
2. Land as soon as practicable.

c. Excessive Loadmeter Indication (Over 100%). If either loadmeter indicates over 100%,, perform the following:

1. **BATT** switch - **OFF** (monitor loadmeter).

IF LOADMETER STILL INDICATES ABOVE 100%:

2. Nonessential electrical equipment - Off.

IF LOADMETER INDICATES 100% OR BELOW:

3. **BATT** switch - **ON.**

d. INVERTER Warning Light Illuminated. Illumination of the **INVERTER** warning annunciator indicates that the selected inverter is inoperative. Perform the following:

1. Select the other inverter.

e. Circuit Breaker Tripped. If the circuit breaker is for a nonessential item, do not reset in flight. If the circuit breaker is for an essential item, the circuit breaker may be reset once. Perform the following:

1. Nonessential circuit - Do not reset in flight.
2. Essential circuit - Reset once. If it trips again, do not reset.

f. **Bus Feeder Circuit Breaker Tipped (Fuel Panel Bus Feeders and Right Circuit Breaker Panel Bus Feeders).**

1. A short is indicated, do not reset in flight.

NOTE

The items that may be inoperative can be determined from the electrical system schematic in Chapter 2, SYSTEMS.

g. BATTERY CHG Annunciator Illuminated During Ground Operations. The **BATTERY CHG** annunciator will illuminate after an engine start. If the annunciator does not extinguish within approximately 5 minutes, monitor the battery charge current using the following procedure:

1. One generator - **OFF.**
2. Voltmeter - Indicating 28 volts.
3. Momentarily turn the battery **OFF** - Note change in loadmeter indication.

NOTE

The change in loadmeter indication is the battery charge current and should be no more than 2.5% (only perceivable needle movement). If the results are unsatisfactory, repeat the check until the charge current decreases to less than 2.5%.

h. BATTERY CHG Annunciator Illuminated In Flight. Inflight illumination of the **BATTERY CHG** annunciator indicates a possible battery malfunction. Use the following procedure:

1. **BATT-OFF.**
2. **BATTERY CHG** annunciator - Check. If extinguished, continue flight. If the light remains illuminated, land as soon as practicable.

i. Generator Overheat (C-12F).

1. **GEN-OFF.**
2. Electrical load - Check.
3. Current limiters - Check.

j. Current Limiter Check.

1. If both **DC GEN** annunciators are illuminated - Individually press each volt/loadmeter switch and observe voltage. If generator voltage is not seen on voltmeter, that current limiter has burned open.
2. If one **DC GEN** annunciator is illuminated - Press both volt/loadmeter switches and observe voltage. If generator voltage is not seen on the affected side, one or more current limiters have burned open. If battery voltage is not seen on the affected side, the current limiter for that side has burned open.

9-30. EMERGENCY DESCENT.

Emergency descent is a maximum effort in which damage to the aircraft must be considered secondary to getting the aircraft down. The following procedure assumes the structural integrity of the aircraft and smooth flight conditions. If structural integrity is in doubt, limit speed as much as possible, reduce rate of descent if necessary, and avoid high maneuvering loads. For emergency descent, perform the following:

1. **POWER** levers - **IDLE.**
2. **PROP** levers - **HIGH RPM.**
3. **FLAPS - APPROACH.**
4. **GEAR - DN.**
5. Airspeed - 181 KIAS maximum.

NOTE

Windshield defogging may be required.

9-31. LANDING EMERGENCIES.

WARNING

Structural damage may exist after landing with brake, tire, or landing gear malfunctions. Under no circumstances shall an attempt be made to inspect the aircraft until jacks have been installed.

NOTE

If the **HYD FLUID LOW** annunciator illuminates during flight, attempt to extend the landing gear normally upon reaching destination. If the landing gear fails to extend, follow the procedures for LANDING GEAR MANUAL EXTENSION.

a. Landing Gear Unsafe Indication. Should one or more of the landing gear fail to indicate a safe condition, the following steps should be taken before proceeding manually to extend the gear:

1. **LDG GEAR CONTROL** - Check **DN.**
2. **LANDING GEAR RELAY** and gear **IND** circuit breakers - Check in.
3. **GEAR DOWN** lights - Check illuminated.

IF INDICATOR REMAINS UNSAFE:

4. Landing gear manual extension - Perform.

b. Landing Gear Manual Extension.

1. Airspeed - Below 181 KIAS.
2. **LANDING GEAR RELAY** circuit breaker -Pull.
3. **LDG GEAR CONTROL - DN.**
4. Manual extension lever - Unstow. Pump until the three green **GEAR DOWN** lights are illuminated and resistance is felt.

CAUTION

If all three of the green **GEAR DOWN** lights do not illuminate, continue pumping until sufficient resistance is felt to ensure the gear is down and locked. DO NOT STOW THE MANUAL EXTENSION LEVER, LEAVE IT IN THE UP POSITION.

5. Manual extension lever - If three green **GEAR DOWN** lights are illuminated, stow the lever.

CAUTION

After a manual landing gear extension has been made due to a malfunction of the system, do not move any landing gear controls or reset any switches or circuit breakers until the cause of the malfunction has been corrected. The malfunction may be in the gear up circuit and the gear might retract on the ground.

c. Gear-up Landing (All Gear Up). Due to decreased drag with the gear up, there may he a tendency to overshoot the desired landing point. The center of gravity will be aft of the main wheels, allowing the aircraft to be landed with a minimum amount of structural damage to the aircraft provided the wings are kept level. It is recommended the fuel load be reduced and the landing made with the flaps fully extended. A hard surface runway should be utilized for the landing whenever possible. Landing on soft ground is not recommended, as sod has a tendency to roll up into chunks and damage the underside of the aircraft structure. When fuel load has been reduced, prepare for a gear up landing as follows:

1. Fuel load - Reduce.
2. Personnel emergency briefing - Complete.
3. Loose equipment - Stow/secure.
4. **BLEED AIR VALVES** - **ENVIRO OFF** (below 10,000 feet).
5. **CABIN PRESS** switch - **DUMP.**

WARNING

Prior to removing the emergency exit hatch, slow to a safe airspeed (approximately 160 KIAS or below) and ensure passengers are seated with scat belts fastened and all loose equipment is secured.

6. Emergency exit hatch - Remove and stow.
7. Seat belts and harnesses - Fasten.
8. Gear manual extension handle - Stow.
9. **LDG GEAR CONTROL - UP.**
10. **LANDING GEAR RELAY** circuit breaker - Pull.
11. **LANDING GEAR WARN** horn circuit breaker - Pull.
12. Nonessential electrical equipment - Off.
13. **FLAPS -** As required **(DOWN** is recommended for landing).

NOTE

Fly a normal approach to touchdown. Avoid touching down in a nose-high attitude.

14. **POWER** levers - **IDLE** when landing on the desired touchdown area is assured.
15. **CONDITION** levers - **FUEL CUTOFF.**
16. Fuel **FIREWALL SHUTOFF VALVES - CLOSED.**
17. **MASTER SWITCH - OFF.**

d. Landing With Nose Gear Unsafe. If the **LDG GEAR CONTROL** warning light is illuminated and the **NOSE GEAR DOWN** light shows an unsafe condition, try to determine the position of the gear. This may be accomplished by a tower flyby or any other means available.

CAUTION

It is not recommended that a MAIN GEAR DOWN, NOSE GEAR UP landing be attempted on a grass/sod runway, unprepared runway, or the areas adjacent to the runway.

1. Fuel load - Reduce.
2. Crew and passenger briefings - Complete.
3. Loose equipment - Stow/secure.
4. **BLEED AIR VALVES - ENVIR OFF** (below 10,000 feet).
5. Cabin pressure switch - DUMP (after cabin has depressurized).

WARNING

Prior to removing the emergency exit hatch, slow to a safe airspeed (approximately 160 KLAS or below) and ensure passengers are seated with seat belts fastened and all loose equipment is secured,

6. Emergency exit hatch - Remove and secure.
7. Seat belts and harnesses - Fasten.
8. Extension handle - Stow.
9. **LDG GEAR CONTROL - DN.**
10. **LANDING GEAR RELAY** circuit breaker - Pull.
11. **LANDING GEAR WARN** horn circuit breaker - Pull.

WARNING

Make a normal approach but hold the nose up as long as possible after touchdown, then ease the nose gently to the runway prior to loss of elevator control. Preventing a sudden drop will minimize structural damage. Use rudder and brakes for directional control. Do not use brakes until the nose is on the runway.

NOTE

Landing light may not be usable with nose gear in unsafe condition.

12. Before landing checklist - Complete.

AFTER TOUCHDOWN:

13. **POWER** levers - **IDLE.**
14. **PROP** levers - **FEATHER.**
15. **CONDITION** levers - **FUEL CUTOFF.**

AFTER STOPPING:

16. Fuel **FIREWALL SHUTOFF VALVES - CLOSED.**
17. **MASTER SWITCH - OFF.**

NOTE

If landing is to be performed at night, the pilot may elect to turn on the baggage compartment light or other cabin lighting to assist in aircraft evacuation. If cabin lighting is desired, leave the **MASTER SWITCH ON.** The baggage compartment light is direct wired to the battery and will illuminate with the **MASTER SWITCH OFF.**

e. Landing With One Main Gear Unsafe. If one main landing gear fails to extend, retract the other gear and make a gear-up landing. If the gear cannot be retracted, land the aircraft on a hard surface runway, touching down on the same edge of the runway as the extended gear. Roll on the down and locked gear, holding the opposite wing up and the nose wheel straight as long as possible. If the gear has extended, but is unsafe, apply brakes lightly on the unsafe side to assist in locking the gear. If the gear has not extended or does not lock, allow the wing to lower slowly to the runway. Use the following procedures:

1. Retract gear and make a GEAR UP LANDING.

IF THE GEAR WILL NOT RETRACT:

2. Fuel load - Reduce.
3. Crew and passenger briefings - Complete.
4. Loose equipment - Stow/secure.
5. **BLEED AIR VALVES - ENVIR OFF** (below 10.000 feet).
6. Cabin pressure switch - **DUMP** (after cabin has depressurized).

WARNING

Prior to removing the emergency exit hatch, slow to a safe airspeed (approximately 160 KIAS or below) and ensure passengers are seated with seat belts fastened and all loose equipment is secured.

7. Emergency exit hatch - Remove and secure.
8. Seat belts and harnesses - Fasten.
9. Extension handle - Stow.
10. **LDG GEAR CONTROL - DN.**
11. **LANDING GEAR RELAY** circuit breaker - Pull.
12. **LANDING GEAR WARN** horn circuit breaker - Pull.
13. Nonessential electrical equipment - Off.
14. Before landing checklist - Complete.
15. Airspeed - Normal approach speed.
16. **FLAPS** - As required.
17. **POWER** levers - **IDLE** when landing on the desired touchdown area is assured.
18. **CONDITION** levers - **FUEL CUTOFF.**

AFTER STOPPING:

19. Fuel **FIREWALL SHUTOFF VALVES - CLOSED.**
20. **MASTER SWITCH - OFF.**

f. Landing With Flat Tire(s). If aware that a main gear tire(s) is flat, a landing close to the edge of the runway opposite the flat the will help avoid veering off the runway. If the nose wheel tire is flat, use minimum braking.

9-32. LANDING WITH INOPERATIVE WING FLAPS (UP).

The aircraft does not exhibit any unusual characteristics when landing with the flaps up. The approach angle will be shallow and the touchdown speed will be higher, resulting in a longer landing roll.

9-33. CRACKED WINDSHIELD.

a. External Crack In-flight. If an external windshield crack is noted, no action is required in flight.

NOTE

Heating elements may be inoperative in areas of crack.

b. Internal Crack In-flight. If it is determined that an internal crack has occured in flight, perform the following:

1. Descend - Below 25,000 feet.
2. Cabin pressure - Reset pressure differential as required.

9-34. CRACKED CABIN WINDOW.

If crack(s) in a cabin window ply(s) occurs in-flight, perform the following:

1. Crew oxygen masks - 100% and on (if above 10,000 feet).
2. **CABIN** signs switch - NO **SMOKE & FSB.**
3. Passenger oxygen - On and checked (if above 10,000 feet). The copilot should confirm that all passengers have oxygen masks on and are receiving supplemental oxygen if required.
4. Cabin pressure - Depressurize.
5. Land as soon as practicable. If a cabin window has developed a crack, the aircraft shall not be flown once landed, without proper ferry flight authorization.

9-35. DITCHING.

If a decision to ditch is made, immediately alert all personnel to prepare for ditching. Plan the approach into the wind if the wind is high and the seas are heavy. If the swells are heavy but the wind is light, land parallel to the swells. Set up a minimum rate descent (power on or off, as the situation dictates - airspeed 110 - 120 KIAS). Flare as in a normal landing, as it is very difficult to judge altitude over water, particularly in a slick sea. Leveling off too high may cause a nose low "drop-in", while having the tail too low at impact may result in the aircraft pitching forward and "digging-in". Expect more than one impact shock and several skips before the final hard shock. There may be nothing but spray visible for several seconds while the aircraft is decelerating. To prevent cartwheeling. it is important that the wings be level when the aircraft hits the water. After the aircraft is at rest, supervise evacuation of passengers and exit the aircraft as quickly as possible. In a planned ditching, the life raft and first-aid kits should be secured close to the cabin emergency exit hatch for easy access when evacuating; however, do not remove the raft from its carrying case inside the aircraft. After exiting the aircraft, keep the raft from any damaged surfaces which might tear or puncture the fabric. The length of time that the aircraft will float depends on the fuel level and the extent of aircraft damage caused by the ditching. Refer to Figure 9-3 for body positions during ditching. Figure 9-4 shows sea swell information. Table 9-1 lists the appropriate duties for crew and occupants for planned ditching and immediate ditching. Perform the following procedures:

WARNING

Do not unstrap from the seat until all motion stops. The possibility of injury and disorientation requires that evacuation not be attempted until the aircraft comes to a complete stop.

1. Radio calls/transponder - As required.
2. Personel emergency briefing - As required.
3. **BLEED AIR VALVES - PNEU & ENVIR OFF.**
4. **CABIN PRESS** switch - **DUMP.**
5. **CABIN** signs switch - **NO SMOKE & FSB.**
6. Cabin emergency exit hatch - Remove and stow.
7. Seat belts and harnesses - Secure.
8. **GEAR - UP.**
9. **FLAPS - DOWN.**
10. Nonessential electrical equipment - Off.
11. Approach - Normal, power on.
12. Emergency lights - As required.

9-36. FLIGHT CONTROLS MALFUNCTION.

Use the following procedures, as applicable, for flight control malfunctions:

a. Unscheduled Rudder Boost Activation. Rudder boost operation without a large variation of power between engines indicates a failure of the system. Perform the following:

1. **RUDDER BOOST - OFF**

NOTE

The rudder boost system may not operate when the brake deice system is in use. Availability of the rudder boost system will be restored to normal when the **BRAKE DEICE** switch is turned **OFF.**

IF CONDITION PERSISTS:

2. **RUDDER BOOST** circuit breaker - Pull.
3. **BLEED AIR VALVE - OFF** (below 10,000 feet).
4. Rudder trim - Adjust.

b. Unscheduled Electric Elevator Trim. In the event of unscheduled electric elevator trim, perform the following:

1. Control wheel disconnect switch - Depress fully.
2. Elevator trim switch - **OFF.**
3. **AP TRIM POWER** circuit breaker - Out.

Table 9-1. Ditching

PLANNED DITCHING	IMMEDIATE DITCHING
PILOT	**PILOT**
A. ALERT OCCUPANTS B. ORDER TO PREPARE SURVIVAL GEAR FOR AERIAL DROP C. TRANSMIT DISTRESS MESSAGE D. LIFE VEST - CHECK (DO NOT INFLATE) E. DISCHARGE MARKER F. DITCH AIRCRAFT G. ABANDON AIRCRAFT	A. WARN OCCUPANTS B. TRANSMIT DISTRESS MESSAGE C. LIFE VEST - CHECK (DO NOT INFLATE) D. APPROACH - NORMAL E. NOTIFY OCCUPANTS TO BRACE FOR DITCHING F. DITCH AIRCRAFT G. ABANDON AIRCRAFT AFTER COPILOT THROUGH CABIN EMERGENCY HATCH
COPILOT	**COPILOT**
A. REMOVE CABIN EMERGENCY HATCH B. LIFE VEST - CHECK (DO NOT INFLATE) C. ABANDON AIRCRAFT (TAKE LIFE RAFT AND FIRST AID KIT)	A. REMOVE CABIN EMERGENCY HATCH B. LIFE VEST - CHECK (DO NOT INFLATE) C. ABANDON AIRCRAFT (TAKE LIFE RAFT AND FIRST AID KIT)
PASSENGERS	**PASSENGERS**
A. SEAT BELTS - FASTEN B. LIFE VEST - CHECK (DO NOT INFLATE) C. ON PILOT'S SIGNAL - BRACE FOR DITCHING D. ABANDON AIRCRAFT THROUGH CABIN DOOR (TAKE LIFE RAFT AND FIRST AID KIT)	A. SEAT BELTS - FASTEN B. LIFE VEST - CHECK (DO NOT INFLATE) C. ON PILOT'S SIGNAL - BRACE FOR DITCHING D. ABANDON AIRCRAFT THROUGH CABIN DOOR (TAKE LIFE RAFT AND FIRST AID KIT)

BTO5547

9-37. ELECTROTHERMAL PROPELLER DEICE (AUTO SYSTEM) MALFUNCTION.

Abnormal Reading on Deice Ammeter (normal operation 18 to 24 amps).

ZERO AMPS:

1. **PROP** deice switch - Check **AUTO.**
2. If **OFF** - Reposition to **AUTO** (after 30 seconds). If in **AUTO** position with zero amps reading, system is inoperative.
3. **PROP** deice switch - **OFF.**
4. Manual backup system - Initiate. (No deice ammeter indication - monitor loadmeter).

BELOW 18 AMPS:

5. Operation - Continue.
6. RPM - Increase (briefly to aid in ice removal if propeller imbalance occurs).

OVER 24 AMPS:

7. Monitor - Continue operation if the **PROP** deice circuit breaker switch does not hip.
8. RPM - Increase (briefly to aid in ice removal if propeller imbalance occurs).
9. Loadmeter - Monitor for excessive current drain. If the **PROP AUTO** deice circuit breaker switch trips, use the manual system.
10. If the **PROP AUTO** deice control circuit breaker or the left or right prop deice circuit breaker trips, avoid icing conditions.

9-38. ELECTROTHERMAL PROPELLER DEICE (MANUAL SYSTEM) MALFUNCTION.

1. Manual propeller deice switch - Hold in **MANUAL** position for approximately 90 seconds, or until ice is dislodged from blades.
2. Manual system current requirement - Monitor the aircraft's loadmeters when the manual deice switch is in the **MANUAL** position. A small needle deflection (approximately 5%) indicates the system is functioning.

BRACE POSITIONS

IN AN EMERGENCY LANDING OR DITCHING SITUATION ASSUME ONE OF THE BRACING POSITIONS SHOWN.

1. REMOVE EYEGLASSES AND SHARP ARTICLES FROM POCKETS.
2. FASTEN SEAT BELT TIGHT AND LOW ACROSS HIPS.
3. SEAT BACK UPRIGHT.

REAR FACING

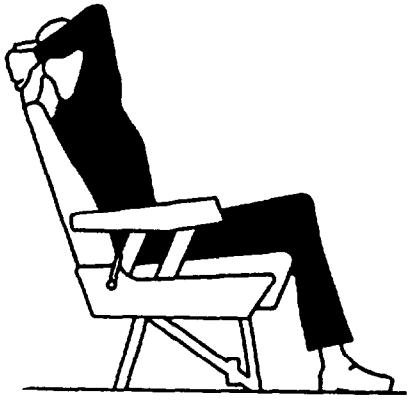

1. RAISE ARMS OVER SHOULDER.
2. GRIP THE TOP OF THE HEADREST. ELBOWS FIRMLY AGAINST HEAD.

FRONT FACING AND COUCH

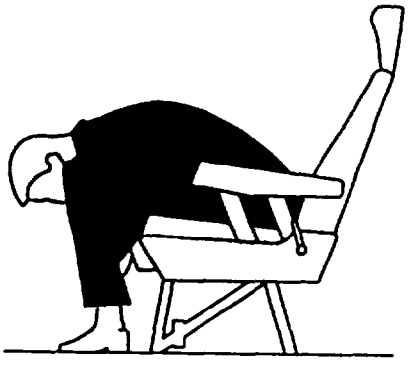

1. LEAN FORWARD AND AS FAR DOWN AS POSSIBLE.
2. CLASP HANDS FIRMLY UNDER LEGS.

A958W09C0473 C

Figure 9-3. Emergency Body Positions

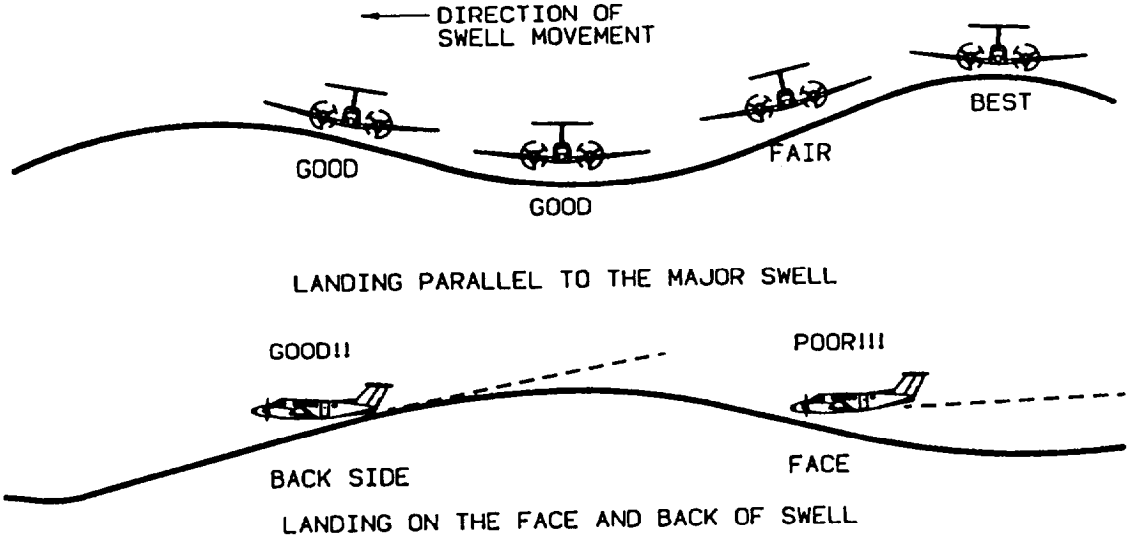

A95BWO9C0472 C

Figure 9-4. Wind Swell Ditch Heading Evaluation

APPENDIX A
REFERENCES

Reference information for the material contained in this manual can be found in the following publications:

AR 70-50	Designating and Naming Defense Equipment, Rockets, and Guided Missiles
AR 95-1	Army Aviation - General Provisions and Flight Regulations
AR 380-40	Safeguarding COMSEC Information
AR 385-40	Accident Reporting and Records
AR 700-26	Aircraft Designation System
DA PAM 738-751	Functional User's Manual for the Army Maintenance Management System - Aviation - (TAMMS-A)
FAR Part 91	General Operating and Flight Rules
FM 1-240	Instrument Flying and Navigation for Army Aviators
FM 1-230	Meteorology for Army Aviators
TB 55-9 150-200-24	Engine and Transmission Oils, Fuels, and Additives for Army Aircraft
TB AVN 23-13	Anti-icing, Deicing, and Defrosting Procedures for Parked Aircraft
TB MED 501	Noise and Conservation of Hearing
TM 11-6140-203-14-2	Operator's Organizational, Direct Support, General Support, and Depot Maintenance Manual Including Repair Parts and Special Tools List: Aircraft Nickel-Cadmium Batteries
TM 55-410	Aircraft Maintenance, Servicing and Ground Handling Under Extreme Environmental Conditions
TM 55-1500-204-25/1	General Aircraft Maintenance Manual
TM 55-1500-314-25	Handling, Storage, and Disposal of Army Aircraft Components Containing Radioactive Materials
TM 55-1500-342-23	Army Aviation Maintenance Manual - Weight and Balance
TM 750-244-1-5	Procedures for the Destruction of Aircraft and Associated Equipment to Prevent Enemy Use

APPENDIX B
ABBREVIATIONS AND TERMS

For the purpose of this manual, the following abbreviations and terms apply. See appropriate technical manuals for additional terms and abbreviations.

B-1. AIRSPEED TERMINOLOGY.

CAS	Calibrated airspeed is indicated airspeed corrected for position and instrument error.
GS	Ground speed is the speed of the aircraft relative to the ground.
IAS	Indicated airspeed is the speed as shown on the airspeed indicator and assumes no instrument error.
KT	Knots.
M	Mach number. The ratio of true airspeed to the speed of sound.
M_{mo}	Maximum operating Mach number.
TAS	True airspeed is calibrated airspeed corrected for altitude, temperature, pressure, and compressibility effects.
V_1	Takeoff decision speed. The maximum speed below which the pilot must initiate the first action (brake application) to discontinue the takeoff. Above V_1 the takeoff must be continued. Varies with weight, temperature, altitude, and runway gradient.
V_a	Maneuvering speed is the maximum speed at which application of full available aerodynamic control will not overstress the aircraft.
V_{enr}	One engine inoperative enroute climb speed with the remaining engine at maximum continuous power setting for the condition, landing gear and flaps retracted.
V_f	Design flap speed is the highest speed permissible at which wing flaps may be actuated.
V_{fe}	Maximum flap extended speed is the highest speed permissible with wing flaps in a prescribed extended position.
V_{le}	Maximum landing gear extended speed is the maximum speed at which an aircraft can be safely flown with the landing gear extended.
V_{lo}	Maximum landing gear operating speed is the maximum speed at which the landing gear can be safely extended or retracted.
V_{mca}	The minimum flight speed at which the aircraft is directionally controllable as determined in accordance with Federal Aviation Regulations. Aircraft Certification conditions include one engine becoming inoperative and propeller feathered; up to a 5° bank toward the operative engine; takeoff power on operative engine; landing gear up; flaps up; and most rearward CG. This speed has been demonstrated to provide satisfactory control above power off stall speed (which varies with weight, configuration, and flight attitude).
V_{mo}	Maximum operating limit speed. Not deliberately exceeded in any phase of flight (climb, cruise, descent)

unless a higher speed is specifically authorized for flight test or pilot training. M_{mo}, varies with altitude.

v_r — Rotation speed. The speed at which aircraft rotation is initiated. Varies with weight, altitude, and temperature.

V_{ref} — The indicated airspeed that the aircraft should be at when 50 feet above the runway in the landing configuration.

v_3 — Power off stalling speed or the minimum steady flight speed at which the aircraft is controllable.

V_{so} — Stalling speed or the minimum steady flight speed in the landing configuration.

V_{sec} — The safe one-engine inoperative speed selected to provide a reasonable margin against the occurrence of an unintentional stall when making intentional engine cuts.

V_{yse} — The best single-engine rate-of-climb speed is the airspeed which delivers the greatest gain of altitude in the shortest possible time with one engine inoperative, gear and flaps up.

B-2. METEOROLOGICAL TERMINOLOGY.

Altimeter Setting — Barometric pressure corrected to sea level.

°C — Degrees Celsius.

°F — Degrees Fahrenheit.

FAT — Free air temperature is the free air static temperature, obtained either from ground meteorological sources or from inflight temperature indications adjusted for compressibility effects.

Indicated Pressure Altitude — The number actually read from an altimeter when the barometric scale (Kollsman window) has been set to 29.92 inches of mercury (1013 millibars).

ISA — International Standard Atmosphere in which:

a. The air is a dry perfect gas.

b. The temperature at sea level is 59 degrees Fahrenheit, 15 degrees Celsius.

c. The pressure at sea level is 29.92 inches Hg.

d. The temperature gradient is -0.003566 degrees Fahrenheit per foot from sea level to the altitude at which the temperature is -69.7 degrees Fahrenheit, and zero above that altitude.

Pressure Altitude — Indicated pressure altitude corrected for altimeter error.

SL — Sea level.

Wind — The wind velocities recorded as variables on the charts of this manual are to be understood as the headwind or tailwind components of the actual winds at 50 feet above runway surface (tower winds).

B-3. POWER TERMINOLOGY.

Beta Range — The region of the **POWER** lever control which is aft of the **IDLE** stop and forward of reversing range where blade pitch angle can be changed without changing gas generator speed.

Cruise Climb — The maximum power approved for normal climb. This power is torque or temperature **(ITT)** limited.

GROUND FINE — The region of the **POWER** lever control, which is aft of the **IDLE** stop and forward of **REVERSE** range, where propeller blade pitch angle and gas generator RPM can be changed. Used to provide deceleration on the ground during landing and accelerate-stop conditions.

HIGH IDLE	The region of **CONDITION** lever control placarded as the **HIGH IDLE** position. This limits the power operation to a minimum of 70% of N_1 RPM.
LOW IDLE	The region of **CONDITION** lever control placarded as the **LOW IDLE** position. This limits the power operation to a minimum of 62% of N_1 RPM.
Maximum Cruise Power	The highest power rating for cruise that is not time limited.
Maximum Power	The maximum power available from an engine for use during an emergency operation.
Normal Rated Climb Power	The maximum power available from an engine for continuous normal climb operations.
Normal Rated Power	The maximum power available from an engine for continuous operation in cruise (with lower ITT limit than normal rated climb power).
Reverse Thrust	The region of the **POWER** lever control which is aft of the Beta and **GROUND FINE** range and controls engine power through **GROUND FINE** and **REVERSE** range.
RPM	Revolutions Per Minute.
SHP	Shaft horsepower. The horsepower imparted to the propeller shaft.
Static Power	The power which must be available for takeoff without exceeding engine limitations.
Takeoff Power	The maximum power available from an engine for takeoff, limited to periods of five minutes duration.

B-4. CONTROL AND INSTRUMENT TERMINOLOGY.

CONDITION Lever (Fuel Shut-off Lever)	The fuel shut-off lever actuates a valve in the fuel control unit which controls the flow of fuel at the fuel control outlet and regulates the **IDLE** range from **LOW** to **HIGH.**
N_1 Tachometer (Gas Generator RPM)	The tachometer registers the RPM of the gas generator with 100% representing a gas generator speed of 37,500 RPM.
POWER Lever (Gas Generator N_1 RPM)	The **POWER** lever serves to modulate engine power from full reverse thrust to takeoff. The position for IDLE represents the lowest recommended level of power for flight operation.
Propeller Control Lever (N_2 RPM)	The propeller control lever is used to control the RPM setting of the propeller governor. Movement of the lever results in an increase or decrease in propeller RPM. Propeller feathering is the reult of lever movement beyond the detents at the low RPM (high pitch) end of the lever travel.
Propeller Governor	The propeller governor senses changes in RPM and hydraulically changes propeller blade angle to compensate for the changes in RPM. Constant propeller RPM is thereby maintained at the selected RPM setting.
Torquemeter	The torquemeter system determines the shaft output torque. Torque values are obtained by tapping into two outlets on the reduction gear case and recording the differential pressure from the outlets.
Interstage Turbine Temperature (ITT)	The temperature of the hot gases present between the compressor turbine and power turbine.

B-5. GRAPH AND TABULAR TERMINOLOGY.

AGL	Above ground level.
Best Angle-of-Climb	The best angle-of-climb speed is the airspeed which delivers the greatest gain of altitude in the shortest possible horizontal distance with gear and **FLAPS UP.**
Best Rate-of-Climb	The best rate-of-climb speed is the airspeed which delivers the greatest gain of altitude in the shortest possible time with gear and flaps up.
Clean Configuration	Gear and **FLAPS UP.**
Demonstrated Crosswind	The maximum 90° crosswind component for which adequate control of the aircraft during takeoff and landing was actually demonstrated during certification tests.
Gradient	The ratio of the change in height to the horizontal distance, usually expressed in percent.
Landing Weight	The weight of the aircraft at landing touchdown.
Maximum Zero Fuel Weight	Any weight above the value given must be loaded as fuel.
MEA	Minimum Enroute Altitude.
Ramp Weight	The gross weight of the aircraft before engine start. Included is the takeoff weight plus a fuel allowance for start, taxi, run-up and take-off ground roll to lift-off.
Route Segment	A part of a route. Each end of that part is identified by a geographic location or a point at which a definite radio fix can be established.
Service Ceiling	The altitude at which the maximum rate-of-climb of 100 feet per minute can be attained for existing aircraft weight.
Takeoff Weight	The weight of the aircraft at lift-off from the runway.

B-6. WEIGHT AND BALANCE TERMINOLOGY.

Approved Loading Envelope	Those combinations of aircraft weight and center of gravity which define the limits beyond which loading is not approved.
Arm	The distance from the center of gravity of an object to a line about which moments are to be computed.
Basic Empty Weight	The aircraft weight with fixed ballast, unusable fuel, engine oil, engine coolant, hydraulic fluid, and in other respects as required by applicable regulatory standards.
Center of Gravity (CG)	A point at which the weight of an object may be considered concentrated for weight and balance purposes.
CG Limits	CG limits are the extremes of movement which the CG can have without making the aircraft unsafe to fly. The CG of the loaded aircraft must be within these limits at takeoff, in the air, and on landing.
Datum	A vertical plane perpendicular to the aircraft longitudinal axis from which fore and aft (usually aft) measurements are made for weight and balance purposes.
Engine Oil	That portion of the engine oil which can be drained from the engine.
Landing Weight	The weight of the aircraft at landing touchdown.
Maximum Weight	The largest weight allowed by design, structural, performance or other limitations.
Maximum Zero Fuel Weight	Any weight above the value must be loaded as fuel.

Moment	A measure of the rotational tendency of a weight, about a specified line, mathematically equal to the product of the weight and the arm.
Standard	Weights corresponding to the aircraft as offered with seating and interior, avionics, accessories, fixed ballast and other equipment specified by the manufacturer as composing a standard aircraft.
Station	The longitudinal distance from some point to the zero datum or zero fuselage station.
Takeoff Weight	The weight of the aircraft at liftoff.
Unusable Fuel	The fuel remaining after consumption of usable fuel.
Usable Fuel	The portion of the total fuel load which is available for consumption as determined in accordance with applicable regulatory standards.
Useful Load	The difference between the aircraft ramp weight and basic empty weight.

B-7. MISCELLANEOUS ABBREVIATIONS.

@	At
AC	Advisory circular, alternating current
ADC	Air data computer
ADF	Automatic direction finder
AFIS	Airborne flight information system
AGL	Above ground level
AHRS	Attitude heading reference system
ALT	Altitude
AM	Amplitude modulation
ANT	Antenna
AP, A/P	Autopilot
ARINC	Aeronautical Radio, Inc.
APRCH	Approach
ARP	Airport reference point
AS, A/S	Airspeed
ATC	Air traffic control
AUX	Auxiliary
AVGAS	Aviation gasoline
AVUM	Aviation unit maintenance
B	At or below
BARO	Barometric
BAT	Battery
BC	Back course
BFO	Beat frequency oscillator
BIT	Built-in test
BOT	Bottom
BRG	Bearing
BRT	Bright
BU	Back-up, battery unit
CAP	Capture
CDI	Course deviation indicator
CDU	Control-display unit
CH	Channel
CKLST	Checklist
CLIMB GRAD	Current aircraft climb performance
COMM	Communications
CRS	Course
CRUISE ALT	Cruise altitude
CW	Continuous wave
DB	Database
DC	Direct current
DEF	Default

DEG	Degrees
DIF	Difference
DIR	Direct
DIS	Distance
DG	Directional gyro
DH	Decision height
DME	Distance measuring equipment
DN	Down
DTRK, DTK	Desired track
E	East
EADI	Electronic attitude director indicator
EFIS	Electronic flight instrument system
EHSI	Electronic horizontal situation indicator
ELEV	Elevation
ELT	Emergency locator transmitter
EMER	Emergency
ENG	Engage
ENRTE	Enroute
EPE	Estimated position error
EST CROSSING	Estimated crossing altitude
ET	Elapsed time
ETA	Estimated time of arrival
ETA@	Estimated time of arrival at destination
ETE	Estimated time enroute
EXP	Expires
FAA	Federal Aviation Administration
FH	Frequency hopping
FH-M	Frequency hopping-master
FL	Flight level
FLIP	Flight information publications
FM	Frequency modulation
FMS	Flight management system
FOD	Foreign object damage
FPA	Flight path angle
FPL	Flight plan
FPM	Feet per minute
FR	From waypoint
FREQ	Frequency
FS	Fuselage station
FT	Foot, feet
FT-LB	Foot-pounds
FT/MIN	Feet per minute
G	Glidepath
GA, G/A	Go-around
GAL	Gallons
GMAP	Ground mapping
GMT	Greenwich mean time
GPS	Global positioning system
GPU	Ground power unit
GRI	Group repetition interval
GS,	Glideslope, groundspeed
GSPD	Ground speed
HDG	Heading
HDOP	Horizontal dilution of precision
HF	High frequency
HP	Holding pattern
HR	Hours
HSI	Horizontal situation indicator
I	Inner marker
ICAO	International Civil Aviation Organization

IDENT	Identification
IFF	Identification, friend or foe
IFR	Instrument flight rules
ILS	Instrument landing system
INBOUND CRS	Inbound holding course
IP	Instructor pilot
KEY	Keyboard
kHz	Kilohertz
L	Left
LAT	Latitude
LB	Pounds
LEG DIST	Leg distance
LH	Left hand
LOC	Localizer
LON, LONG	Longitude
LRN	Long range navigation
LSB	Lower sideband
MAG	Magnetic
MAN	Manual
MAX	Maximum
MAN ALT	Manual altitude
MAP	Missed approach point
MDA	Minimum descent altitude
MFD	Multifunction display
MHz	Megahertz
MIC	Microphone
MIN	Minimum
MM	Middle marker
MSG	Message
N	North
N/A	Not applicable
NAUT	Nautical
NAV	Navigation
NAV AID	Navigation aid
NDB	Non-directional beacon
NM	Nautical miles
NORM	Normal
NTPD	Normal temperature and pressure, dry
NX	Next waypoint
OBS	Omni bearing selector
OM	Outer marker
PITCH SYNC	Pitch synchronization
POS	Position
PRESEL ALT	Preselect altitude
#PRESL	Preselected altitude profile point
PREV, PRV	Previous
PRN	Pseudo random noise
PSIG	Pounds per square inch gage
PT	Procedure turn
R	Right
RA, R/A	Radio altimeter
RAD	Radial
RAIM	Receiver autonomy integrity monitoring
R/C	Rate-of-climb
RCVD	Received
REM	Remaining
REQ FPM	Require feet per minute
RMI	Radio magnetic indicator
RNAV	Area navigation
RNG	Range
RPM	Revolutions per minute
RT	Receiver-transmitter
RW	Runway
S	South

SID	Standard instrument departure
SM	Software modification level
SN	Signal to noise ratio
SQ	Squelch
STAR	Standard terminal arrival route
STBY	Standby
SYNC	Synchronization
SXTK	Selected crosstrack
T	True
TACAN	Tactical air navigation
TAS	True airspeed
TBO	Time between overhauls
TCN	Tactical air navigation
TEMP	Temperature
TK	Track angle
TKE	Track error
#TOC	Top of climb profile point
#TOD	Top of descent profile point
TRANS LEVEL	Transition level
TRCK	Track
TRMNL	Terminal
UHF	Ultra high frequency
USB	Upper sideband
VAR	Magnetic variation
VERT DEV	Vertical deviation
VFR	Visual flight rules
VHF	Very high frequency
VIP	Video integrated processor
VNAV	Vertical navigation
VOL	Volume
VOR	VHF omni range
VORTAC	Collocated VOR and TACAN station
VS	Vertical speed
VSI	Vertical speed indicator
W	West
WPT	Waypoint
WSHLD	Windshield
WW	Worldwide
WX	Weather radar
XPDR	Transponder
XTK	Crosstrack
YD, Y/D	Yaw damper

INDEX

* U.S. GOVERNMENT PRINTING OFFICE: 1999 -733-178/85011

F

G

By Order of the Secretary of the Army:

DENNIS J. REIMER
General, United States Army
Chief of Staff

Official:

JOEL B. HUDSON
Administrative Assistant to the
Secretary of the Army
05113

DISTRIBUTION: To be distributed in accordance with Initial Distribution No. (IDN) 313764, requirements for TM 1-1510-225-10.

ELECTRONIC DA FORM 2028 INSTRUCTIONS

The following format must be used if submitting an electronic 2028. The subject line must be exactly the same and all fields must be included: however, only the following fields are mandatory: 1,3,4,5, 6, 7, 8, 9, 10. 13. 15, 16, 17, and 27.

From: 'Whomever" <whomever@avma27.army.mil>
To: Is-Ip@redstone.army.mil
Subject: DA Form 2028
1. From: Joe Smith
2. Unit: home
3. Address: 4300 Park
4. City: Hometown
5. St.AL
6. Zip: 77777
7. Date Sent: 19-OCT-93
8. Pub NO: 55-2840-229-23
9. Pub Title: TM
10. Publication Date: 04-JUL-85
11. Change Number: 7
12. Submitter Rank: MSG
13. Submitter Fname: Joe
14. Submitter Mname: T
15. Submitter Lname: Smith
16. Submitter Phone: 123-123-1234
17. Problem: 1
18. Page: 2
19. Paragraph: 3
20. Line: 4
21. NSN: 5
22 Reference: 6
23. Figure: 7
24. Table: 8
25. Item: 9
26. Total: 123
27. Text:

This is the text for the problem below line 27.

*us. GOVERNMENT PRINTING OFFICE:1998-633-280/60286

RECOMMENDED CHANGES TO EQUIPMENT TECHNICAL PUBLICATIONS

THEN . .JOT DOWN THE DOPE ABOUT IT ON THIS FORM,CAREFULLYTEAR IT OUT, FOLD IT AND DROP IT IN THE MAIL!

SOMETHING WRONG WITH THIS PUBLICATION?

FROM: (PRINTYOUR UNIT'S COMPLETE ADDRESS)
PFC John DOE
CO A 3rd Engineer Bn
Ft. Leonardwood, MO 63108

DATE SENT 22 August 1992

PUBLICATION NUMBER	PUBLICATION DATE	PUBLICATION TITLE
TM 1-1520-250-10	15 June 1992	Operator's manual MH60K Helicopter

BE EXACT PIN-POINT WHERE IT IS

PAGE NO	PARA-GRAPH	FIGURE NO	TABLE NO
6	2-1 a		
B1		4-3	

IN THIS SPACE, TELL WHAT IS WONG AND WHAT SHOULD BE DONE ABOUT IT:

In line 6 of paragraph 2-1a the manual states the engine has 6 cylinders. The engine on my set only has 4 cylinders. Change the manual to show 4 cylinders.

Callout 16 on figure 4-3 is pointed at a bolt. In key to figure 4-3, item 16 is calle a shim. Please correct one or the other

EXAMPLE

PRINTED NAME, GRADE OR TITLE, AND TELEPHONE NUMBER

JOHN DOE, PFC (268) 317-7111

SIGN HERE

JOHN DOE John Doe

DA FORM 1 JUL 79 2028-2

PREVIOUS EDITIONS ARE OBSOLETE.

DRSTS-M verprint2, 1 Nov 80

P.S.- - IF YOUR OUTFIT WANTS TO KNOW ABOUT YOUR RECOMMENDATION, MAKE A CARBON COPY OF THIS AND GIVE TO YOUR HEADQUARTERS.

REVERSE OF DA FORM 2028-2

FILL IN YOUR UNIT'S ADDRESS

FOLD BACK

DEPARTMENT OF THE ARMY

TEAR ALONG PERFORATED LINE

COMMANDER
US ARMY AVIATION AND MISSILE COMMAND
ATTN AMSAM-MMC-LS-LP
REDSTONE ARSENAL AL 35898-5230

RECOMMENDED CHANGES TO EQUIPMENT TECHNICAL PUBLICATIONS

THEN . .JOT DOWN THE DOPE ABOUT IT ON THIS FORM,CAREFULLYTEAR IT OUT, FOLD IT AND DROP IT IN THE MAIL!

SOMETHING WRONG WITH THIS PUBLICATION?

FROM: (PRINTYOUR UNIT'S COMPLETE ADDRESS)

DATE SENT

PUBLICATION NUMBER	PUBLICATION DATE	PUBLICATION TITLE
TM 1-1510-225-10	10 June 1998	Operator's Manual, C-12R Aircraft

BE EXACT PIN-POINT WHERE IT IS

PAGE NO	PARA-GRAPH	FIGURE NO	TABLE NO

IN THIS SPACE, TELL WHAT IS WONG AND WHAT SHOULD BE DONE ABOUT IT:

PRINTED NAME, GRADE OR TITLE, AND TELEPHONE NUMBER

SIGN HERE

DA FORM 1 JUL 79 2028-2

PREVIOUS EDITIONS ARE OBSOLETE.

DRSTS-M verprint2, 1 Nov 80

P.S.- - IF YOUR OUTFIT WANTS TO KNOW ABOUT YOUR RECOMMENDATION, MAKE A CARBON COPY OF THIS AND GIVE TO YOUR HEADQUARTERS.

REVERSE OF DA FORM 2028-2

FILL IN YOUR UNIT'S ADDRESS

FOLD BACK

DEPARTMENT OF THE ARMY

TEAR ALONG PERFORATED LINE

COMMANDER
US ARMY AVIATION AND MISSILE COMMAND
ATTN AMSAM-MMC-LS-LP
REDSTONE ARSENAL AL 35898-5230

RECOMMENDED CHANGES TO EQUIPMENT TECHNICAL PUBLICATIONS

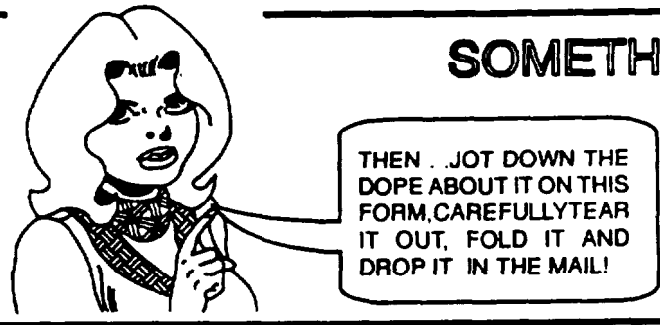

SOMETHING WRONG WITH THIS PUBLICATION?

FROM: (PRINTYOUR UNIT'S COMPLETE ADDRESS)

DATE SENT

PUBLICATION NUMBER	PUBLICATION DATE	PUBLICATION TITLE
TM 1-1510-225-10	10 June 1998	Operator's Manual, C-12R Aircraft

BE EXACT PIN-POINT WHERE IT IS

PAGE NO	PARA-GRAPH	FIGURE NO	TABLE NO

IN THIS SPACE, TELL WHAT IS WONG AND WHAT SHOULD BE DONE ABOUT IT:

PRINTED NAME, GRADE OR TITLE, AND TELEPHONE NUMBER

SIGN HERE

DA FORM 1 JUL 79 2028-2

PREVIOUS EDITIONS ARE OBSOLETE.

DRSTS-M verprint2, 1 Nov 80

P.S.- - IF YOUR OUTFIT WANTS TO KNOW ABOUT YOUR RECOMMENDATION, MAKE A CARBON COPY OF THIS AND GIVE TO YOUR HEADQUARTERS.

REVERSE OF DA FORM 2028-2

FILL IN YOUR UNIT'S ADDRESS

FOLD BACK

DEPARTMENT OF THE ARMY

TEAR ALONG PERFORATED LINE

COMMANDER
US ARMY AVIATION AND MISSILE COMMAND
ATTN AMSAM-MMC-LS-LP
REDSTONE ARSENAL AL 35898-5230

RECOMMENDED CHANGES TO EQUIPMENT TECHNICAL PUBLICATIONS

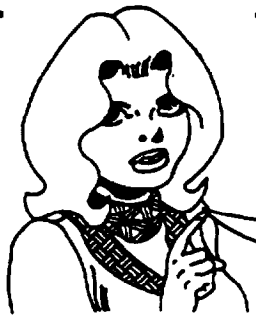

THEN . .JOT DOWN THE DOPE ABOUT IT ON THIS FORM,CAREFULLYTEAR IT OUT, FOLD IT AND DROP IT IN THE MAIL!

SOMETHING WRONG WITH THIS PUBLICATION?

FROM: (PRINTYOUR UNIT'S COMPLETE ADDRESS)

DATE SENT

PUBLICATION NUMBER	PUBLICATION DATE	PUBLICATION TITLE
TM 1-1510-225-10	10 June 1998	Operator's Manual, C-12R Aircraft

BE EXACT PIN-POINT WHERE IT IS

PAGE NO	PARA-GRAPH	FIGURE NO	TABLE NO

IN THIS SPACE, TELL WHAT IS WONG AND WHAT SHOULD BE DONE ABOUT IT:

PRINTED NAME, GRADE OR TITLE, AND TELEPHONE NUMBER

SIGN HERE

DA FORM 1 JUL 79 2028-2

PREVIOUS EDITIONS ARE OBSOLETE.

P.S.- - IF YOUR OUTFIT WANTS TO KNOW ABOUT YOUR RECOMMENDATION, MAKE A CARBON COPY OF THIS

REVERSE OF DA FORM 2028-2

FILL IN YOUR UNIT'S ADDRESS

FOLD BACK

DEPARTMENT OF THE ARMY

TEAR ALONG PERFORATED LINE

COMMANDER
US ARMY AVIATION AND MISSILE COMMAND
ATTN AMSAM-MMC-LS-LP
REDSTONE ARSENAL AL 35898-5230