GENERAL DESCRIPTION
BOEING 2707-300
SUPERSONIC TRANSPORT

THE SST

A GENERAL DESCRIPTION

SEPTEMBER 1969

THE BOEING COMPANY COMMERCIAL AIRPLANE GROUP
SUPERSONIC TRANSPORT DIVISION

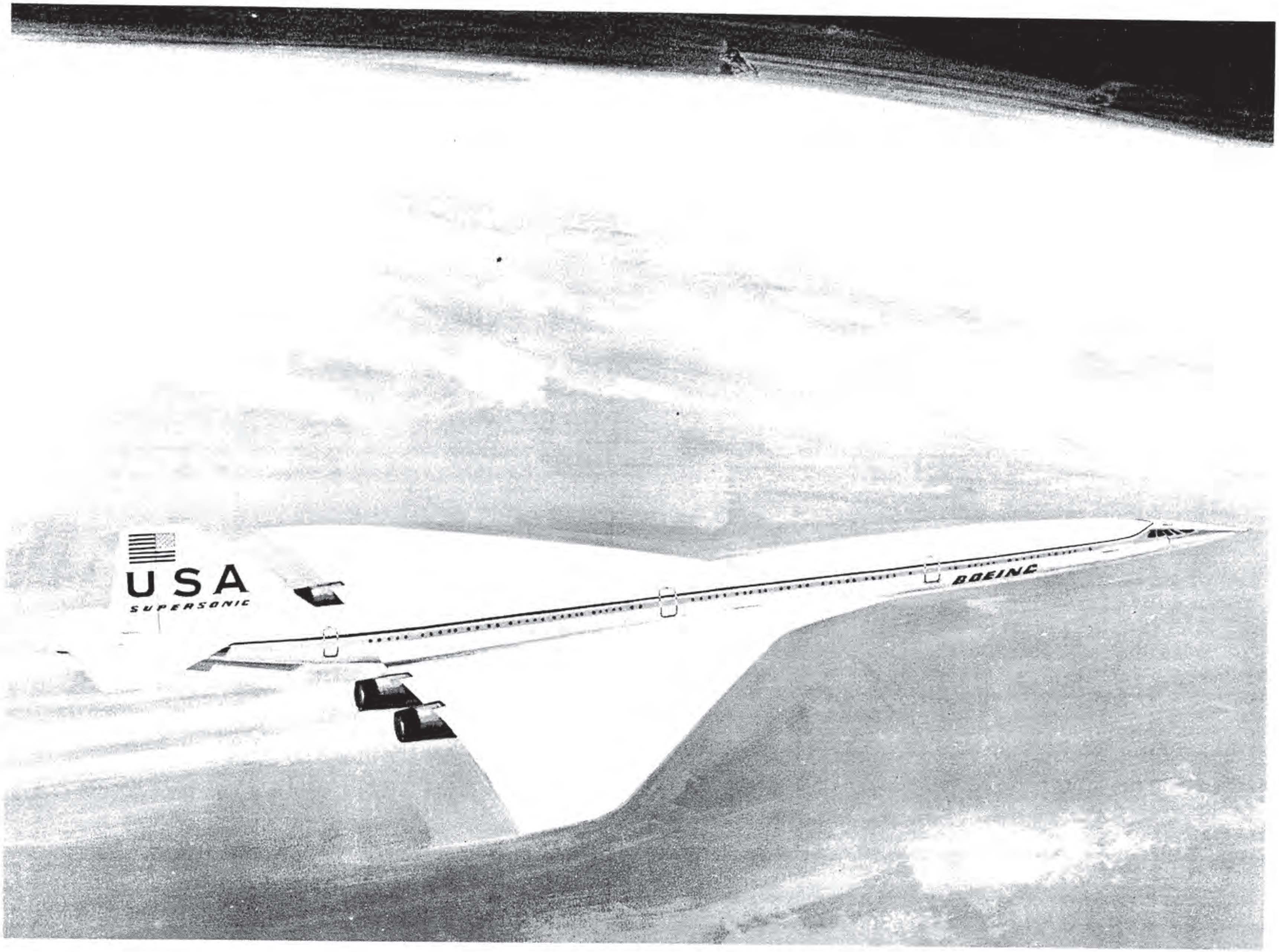

The Boeing 2707-300 Supersonic Transport

TABLE OF CONTENTS

PAGE
INTRODUCTION 1-1
SUMMARY 2-1
GENERAL DESCRIPTION 3-1
PASSENGER ACCOMMODATIONS 4-1
FLIGHT DECK 5-1
STRUCTURES 6-1
PROPULSION 7-1

SYSTEMS

ENVIRONMENTAL CONTROL 8-1
FLIGHT CONTROL 8-5
HYDRAULIC POWER 8-7
ELECTRICAL POWER 8-10
COMMUNICATIONS AND NAVIGATION 8-12

OPERATIONAL CHARACTERISTICS

PERFORMANCE

PAYLOAD RANGE 9-1
MISSION PROFILE 9-3
TAKEOFF 9-7
LANDING 9-7
TERMINAL CONSIDERATIONS 9-8
SIZING VERSATILITY 10-1

INTRODUCTION

This document describes the design and operational characteristics of the Boeing Model 2707-300 Supersonic Transport. Other documentation is available concerning the airplane economics and national benefit aspects of the U. S. SST Program.

Since beginning its supersonic transport investigations in the early 1950's, Boeing has considered hundreds of configurations in the iterative research and development processes involving more than 16 million engineering manhours and 35 thousand hours of wind tunnel testing to date.

The General Electric Company has expended a similar program of extensive research and development in the design of the engine. More than 1000 hours of ground test operation have been accumulated to date on eight engines including operation at speed, altitude and temperature conditions representative of those to be encountered in flight.

The 2707-300 airplane resulting from this extensive research and engineering background will be significantly superior to competing non-U.S. supersonic transports (now in prototype flying status) in speed, range, payload capacity, and operating economy. Its productivity in terms of seat miles per flight hour on intercontinental routes is more than twice that of the advanced 747 and three times that of the Concorde. The total operating costs and attractiveness of its speed and ride comfort to the passenger will combine to achieve reasonable airline profits at today's economy class ticket prices.

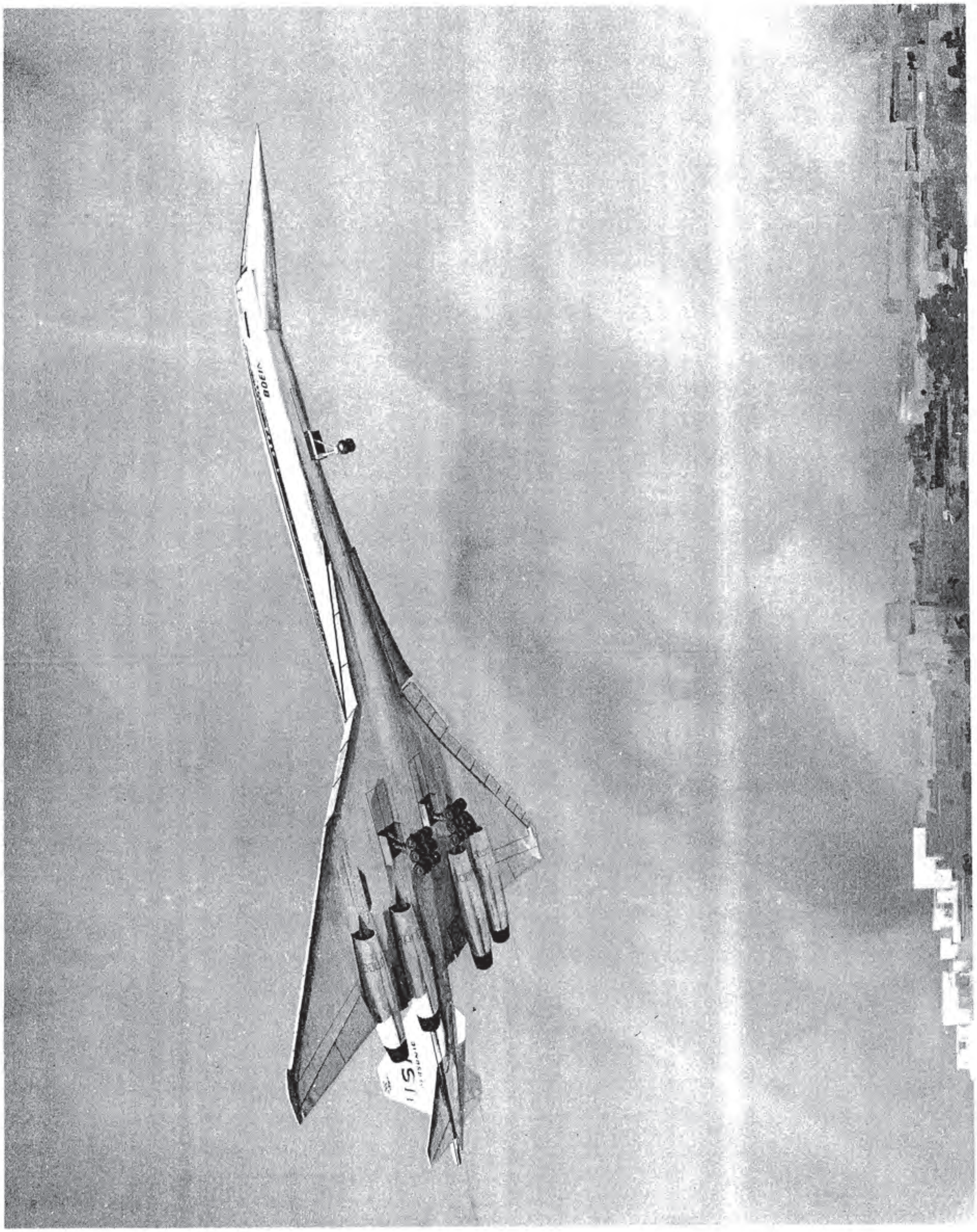

Takeoff Configuration

SUMMARY

The Boeing Model 2707-300 supersonic transport airplane is constructed principally of titanium alloy and its general arrangement is conventional in the placement of major components. Power is supplied by four General Electric GE4 turbojet engines each producing more than 65,000 pounds of thrust. The cruising speed of 1800 miles per hour is three times faster than subsonic jet transports. The 2707-300 is a product of logical progression in the family of Boeing commercial transports. Basic comparative data to its subsonic predecessors are shown on Table 2-1 .

The design is a balanced combination of performance, flying qualities, and operational characteristics without compromise of overriding safety requirements. The original performance objectives of obtaining good low-speed characteristics while maintaining cruise performance goals have been achieved. Continuing liaison with the airlines, air traffic control agencies, and airports of the world has been utilized to ensure establishment of practical design and operating requirements to effect compatibility with the contemporary system of air transportation.

The basic passenger cabin arrangement has been designed to accommodate 298 passengers in seats having greater width than on current airplanes. It provides maximum operational flexibility to the airlines through modular design allowing rapid substitution of seats for galleys and lavatories, and the ready capability to change the ratio of first class to tourist seating.

Full span leading and trailing edge flaps allow the 2707-300 to take off and land within the runway lengths of existing international airports. Special attention has been devoted to the landing gear design so that the pavement loading characteristics are equivalent to those of larger intercontinental subsonic jets in current operation. Airport and community noise levels are maintained at satisfactory limits through the application of sound attenuation techniques in the propulsion system design.

It is anticipated that supersonic flight will be restricted to over water and uninhabited land masses to avoid sonic boom annoyance. The performance capabilities of the airplane permit subsonic flight at no appreciable loss in range where such boom restrictions exist.

Safety is a prime objective. Pertinent data from years of designing and flying large commercial jets are being used by the 2707-300 design team. Technical surveillance of advanced military supersonic aircraft programs has provided additional design guidance and illuminated areas requiring research and development emphasis to improve safety and reliability. The "fail-safe" principle has been used extensively in both structural and system design. This means that each major structure or system has a supporting structure or back-up system, and in fact, four independent systems are provided in those systems necessary for flight safety. Advanced electronics will allow the pilots to anticipate and plan detour paths around storms or turbulence. Automatic flight control systems coupled with advanced traffic control management will eliminate weather delays in takeoffs and landings.

As with current subsonic jet transports, more than one size of the Boeing 2707 series is contemplated to match the varying payload/range requirements of the world's airlines. The basic design has been evolved to enable adaption of several alternate body sizes with little change to the other airframe components. This concept affords a substantial marketing advantage since various models can be offered for a minimum increase in engineering and manufacturing cost.

Table 2-1

	707	747	2707
Cruise Speed Mach No. MPH	 .84 550	 .90 600	 2.70 1800
Trip Time (Hrs-Min) New York/Paris	 6:45	 6:20	 2:45
Passenger Capacities	139-175	366-490	253-321
Cruise Altitude (Ft)	32,000	35,000	62,000
Length (Ft)	153	232	298
Wingspan (Ft)	146	196	143
Gross Weight (lbs)	333,600	738,000	750,000
Engine Thrust (lbs/ea.)	18,000	44,000	65,000
Structural Material	Aluminum	Aluminum	Titanium

The basic subsystems design has been evolved from proven concepts employed in previous or current subsonic transport and supersonic military aircraft as summarized in Table 2-2 below.

Table 2-2

SUBSYSTEM	CHARACTERISTICS	COMMENT
Hydraulics	4000 psi—4 independent systems	Similar to Concorde and proven in military supersonic aircraft
Electrical	4 generating systems of 75 KVA each	Extension of proven systems in current commercial transport and military aircraft.
Flight Controls	Hydraulically powered, multiple redundancy	Extension of concepts under evolution since WWII transport aircraft and currently in use in commercial and military jet aircraft.
Environmental Control	4 independent air cycle refrigeration systems.	Similar to equipment in current use in jet transports.
Navigation	3 independent inertial guidance systems.	Similar systems in operation on 707, DC-8, and 747 transports.
Fuel	Simple sequential usage from auxiliary tanks through main tanks to engines.	Uses same aviation kerosene as current jets in similar system concept.

GENERAL DESCRIPTION

The dimensional characteristics and general arrangement of the 2707-300 airplane are shown on Figure 3-A. A summary description of the individual systems and components of the airplane is given below. Further detailed information is included in succeeding sections.

The passenger cabin is 194 feet long having a constant six abreast width for most of its length, permitting an all tourist seating arrangement of 298 passengers and accommodating the installation of seven lavatory and seven galley compartments. A lower forward containerized cargo compartment provides 1340 cu. ft. of volume and an aft lower compartment provides an additional 344 cu. ft. of bulk cargo capacity.

The flight deck is specifically designed for operation by a crew of two pilots and a flight engineer. Development of advanced instrumentation such as the Electronic Attitude Director Indicator (EADI) and the Pictorial Horizontal Situation Display or Moving Map has been coupled with advances in the area of human factors analysis to reduce crew work loads from present levels. The advanced instrumentation provides more flexibility in the field of area navigation since the flight crew can position the airplane accurately without reliance on ground based navigational aids. By pivoting the forebody down for subsonic and terminal area operations, the pilots are afforded vision superior to that on current subsonic jets. Equipment and instrumentation is included to provide all weather landing capability.

Basic airframe structure is fabricated of titanium alloy, employing variations of skin-stringer and sandwich panel type construction. The two main landing gears are of conventional design with an oleo-pneumatic shock strut attached at the center of the 3 axle 12 tire truck. All gears retract forward to provide free fall capability for emergency extension.

General Electric GE4 turbojet engines are installed in separate pods similar in design to 707, DC-8 and 747 airplanes. An accessory drive system (ADS) consisting of a gear box shaft-powered from the engine is mounted in the wing trailing edge adjacent to each engine. Each gear box drives two hydraulic pumps and an electrical generator. The engine starters and boost compressors for the environmental control system are separately mounted directly to an engine driven gear box within each propulsion pod.

The engines use standard commercial aviation kerosene which is contained in a fuel system of four main and eight auxiliary tanks. Simple sequential usage from auxiliary through main tanks automatically assures control of airplane balance.

The environmental control system (ECS) comprises four independent subsystems using engine bleed air, conditioned by air cycle machines. Initial cooling of engine bleed air is accomplished within the nacelle to reduce the air temperature in duct runs through airframe structure.

Flight control is provided by conventionally placed aerodynamic surfaces powered by multiple actuators driven by independent sources of hydraulic power and controlled by both mechanical and electric commands from the pilots or automatic flight control system. Leading and trailing edge flaps provide high lift during takeoff, landing, and subsonic flight to reduce runway length requirements, improve noise characteristics and increase subsonic range.

Electrical power is provided by four generating systems of 75 KVA each driven by their respective ADS gear boxes. Sufficient electrical power is provided to maintain supersonic flight with three generating systems operative and subsonic flight with one system operative. In addition, a standby battery powered system is installed which will provide essential electric power in the event of loss of all generating systems.

Hydraulic power is derived from eight pumps rated at 80 gallons per minute each at 4000 pounds per square inch. An auxiliary electrically driven pump is also installed to provide power for emergency landing gear release and brake operation during towing.

Advanced design communication and navigation equipment is installed including multiple inertial navigation, distance measuring equipment (DME) and satellite communications systems. Space is provided for Loran, Collision Avoidance and Clear Air Turbulence Detection systems. An Airborne Integrated Data System (AIDS) is installed which permits early diagnosis of impending maintenance requirements thus speeding accomplishment of remedial action and reducing delays.

Maximum Design Taxi Weight: 750,000 lb

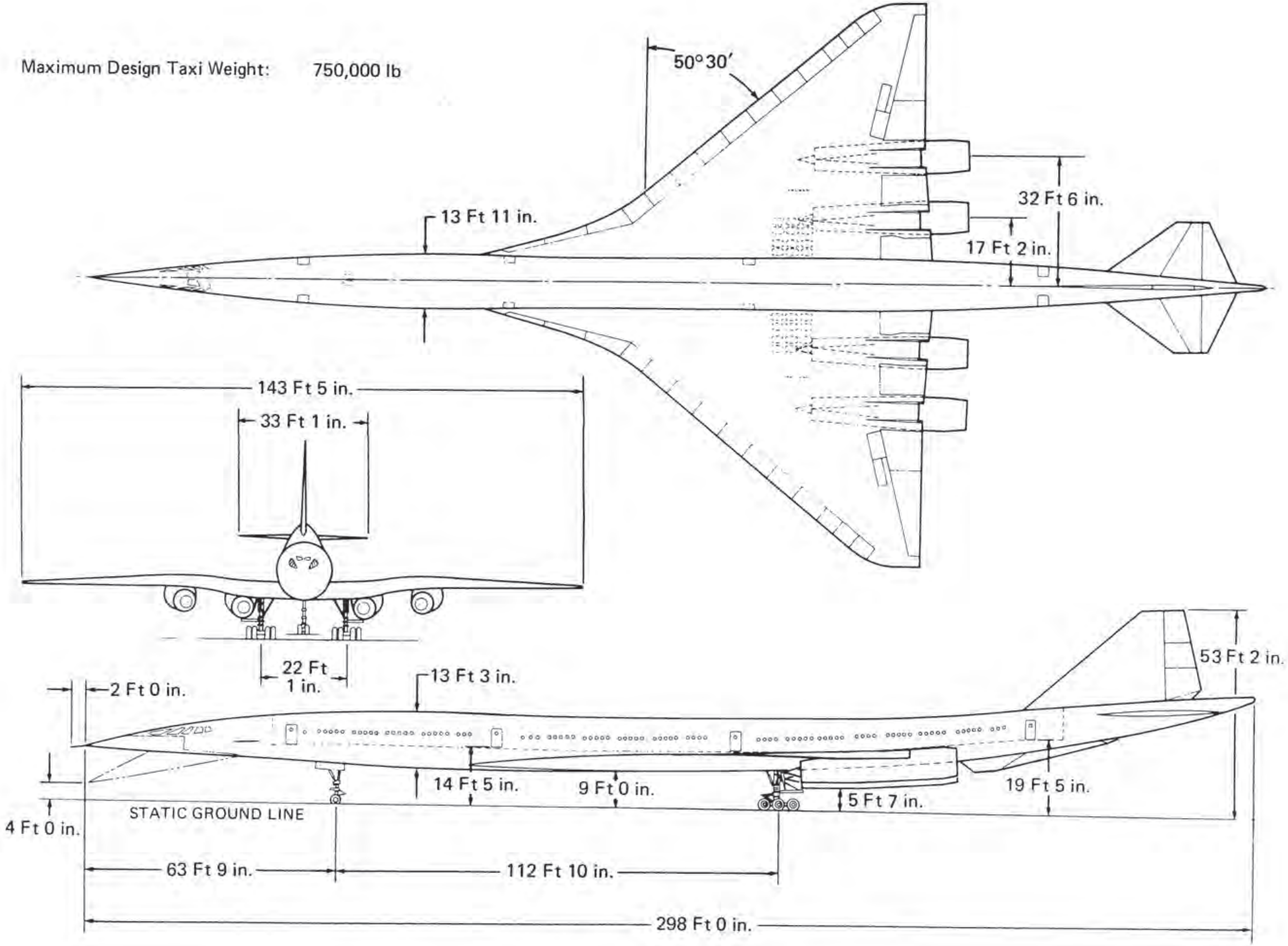

Figure 3-A. General Arrangement

PASSENGER ACCOMMODATIONS

The basic interior arrangement of the 2707-300 provides accommodations for 298 tourist passengers as shown in Figure 4-A. Six abreast seating is utilized throughout the major portion of the cabin with the seat rows spaced at 34 inch pitch. Each triple seat is substantially wider than those used in six abreast seating arrangements currently employed in existing jet transports. Cross sections through the cabin are also shown on Figure 4-A. Other features of the basic cabin arrangement are as follows:

- Cabin length of 194 feet
- Seven lavatories, with a ratio of 43 passengers per lavatory
- Seven galleys, with a ratio of 1.6 cubic feet of stowage volume per passenger
- Eight attendant seats, with a ratio of 37 passengers per attendant

These service ratios afford an improved level of accommodation over the intermediate range aircraft of the 727 class which have comparable trip time durations. Interior noise levels are low, facilitating easy conversation between passengers.

Emergency equipment located throughout the passenger cabin is designed to provide rapid identification and use. Combination escape slides/life rafts are installed at each entry and service door for rapid deployment under evacuation conditions.

Figure 4-B shows the provisions for stowing cargo and baggage aboard the airplane. The forward compartment of 1340 cubic foot capacity is containerized to minimize passenger terminal delay and provide improved airplane utilization through shortened ramp time. An additional volume of 344 cubic feet is provided in the aft compartment for bulk loading of mail and cargo.

Other body sizes are under consideration as discussed in the concluding section entitled "Sizing Versatility."

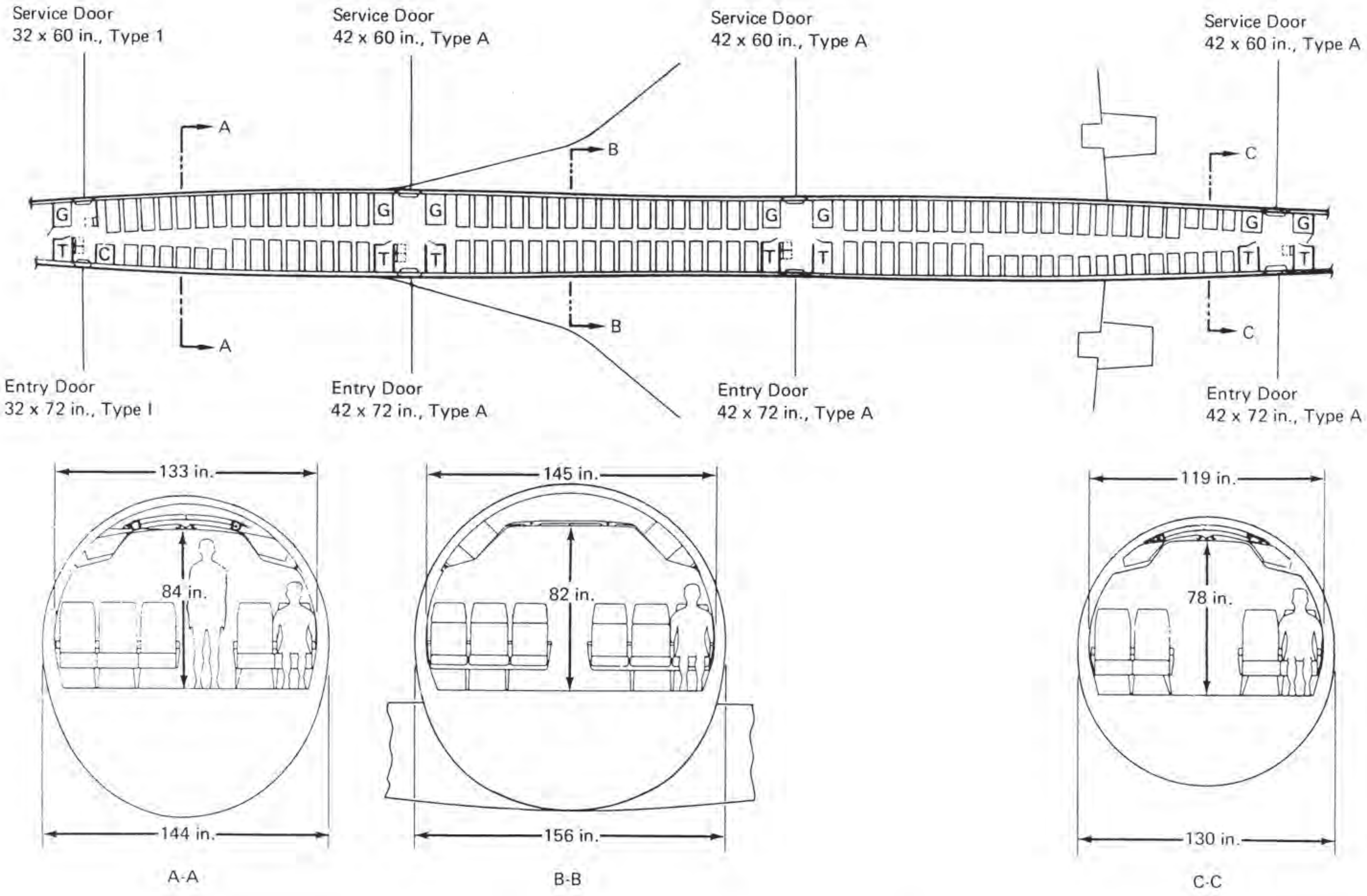

Figure 4-A. Interior Arrangement 298 Passengers

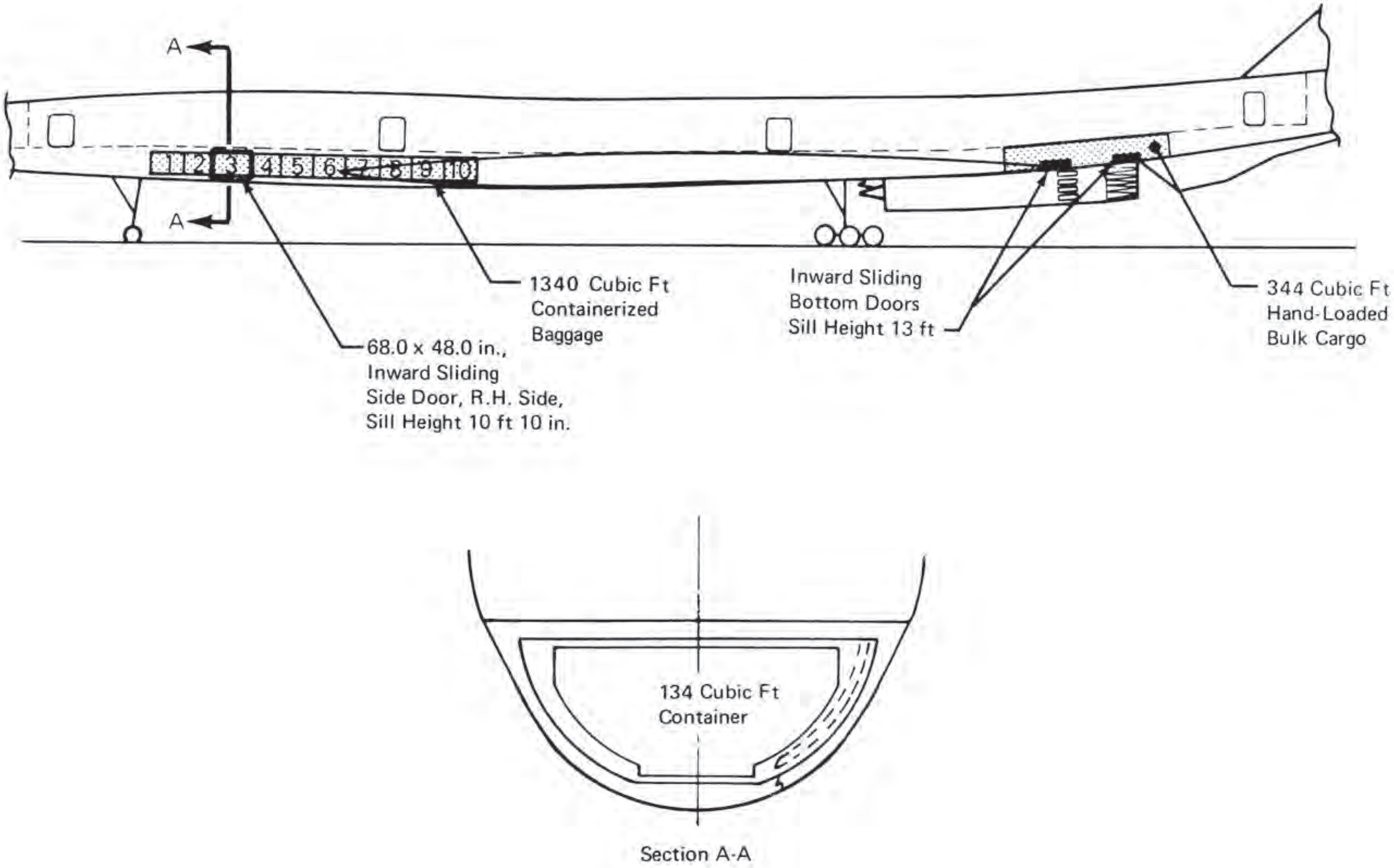

Figure 4-B. Baggage/Cargo Arrangement

FLIGHT DECK

The SST flight deck general arrangement is specifically designed for a primary flight crew of three; captain, first officer, and flight engineer, and is laid out to accommodate the first to 99th percentile current airplane pilot (men 5'4" to 6'4" and 130 pounds to 230 pounds). Two observer seat positions are also provided (Figure 5-A).

The captain's, first officer's, and flight engineer's seats are power operated horizontally and vertically. The flight engineer's seat can be positioned facing forward on the centerline of the flight deck with his eyes at the same level as the pilots' eyes for takeoff and landing. The flight engineer's station is arranged with essential instrumentation and controls accessible to him when he is seated in this high forward position during takeoff and landing. The forward observer's seat swivels inboard and is adjustable vertically. The flight deck floors under the pilots', flight engineer's, and observer's stations are horizontal in cruise. The pilots' head clearance and viewing angle to the overhead panel are comparable to current Boeing commercial jet airplanes.

Electronic attitude director indicators (EADI), with a television picture of the real world superimposed on and indexed to attitude and flight path symbology, are installed in the center of each pilot's panel (Figure 5-B) to furnish advanced precision in instrument flight control guidance. Greatly enhanced instrument panel visibility is provided by use of power boosted flight control handles extending from the panel rather than conventional wheel and column combinations which are floor mounted. The additional panel space beneath the EADI thus made visible is employed for the installation of a large area navigational display using a moving map technique for improved horizontal situation presentation. Such other advanced equipment as integrated communication/navigation control and display units, and multifunction cathode ray tube displays are installed. These equipments incorporate latest electronic techniques and are designed to minimize crew work load while providing an increased level of reliability.

The variable geometry nose section represents the best compromise between visibility, aerodynamic efficiency, and instrument panel layout. See Figures 5-C and 5-D. The pilots are provided vision directly along the airplane flight path during supersonic cruise with the nose in the faired position, and better vision angles than current jet transports when the nose is deployed down for terminal operations. Redundant means are provided for actuation of the forebody to the lowered position.

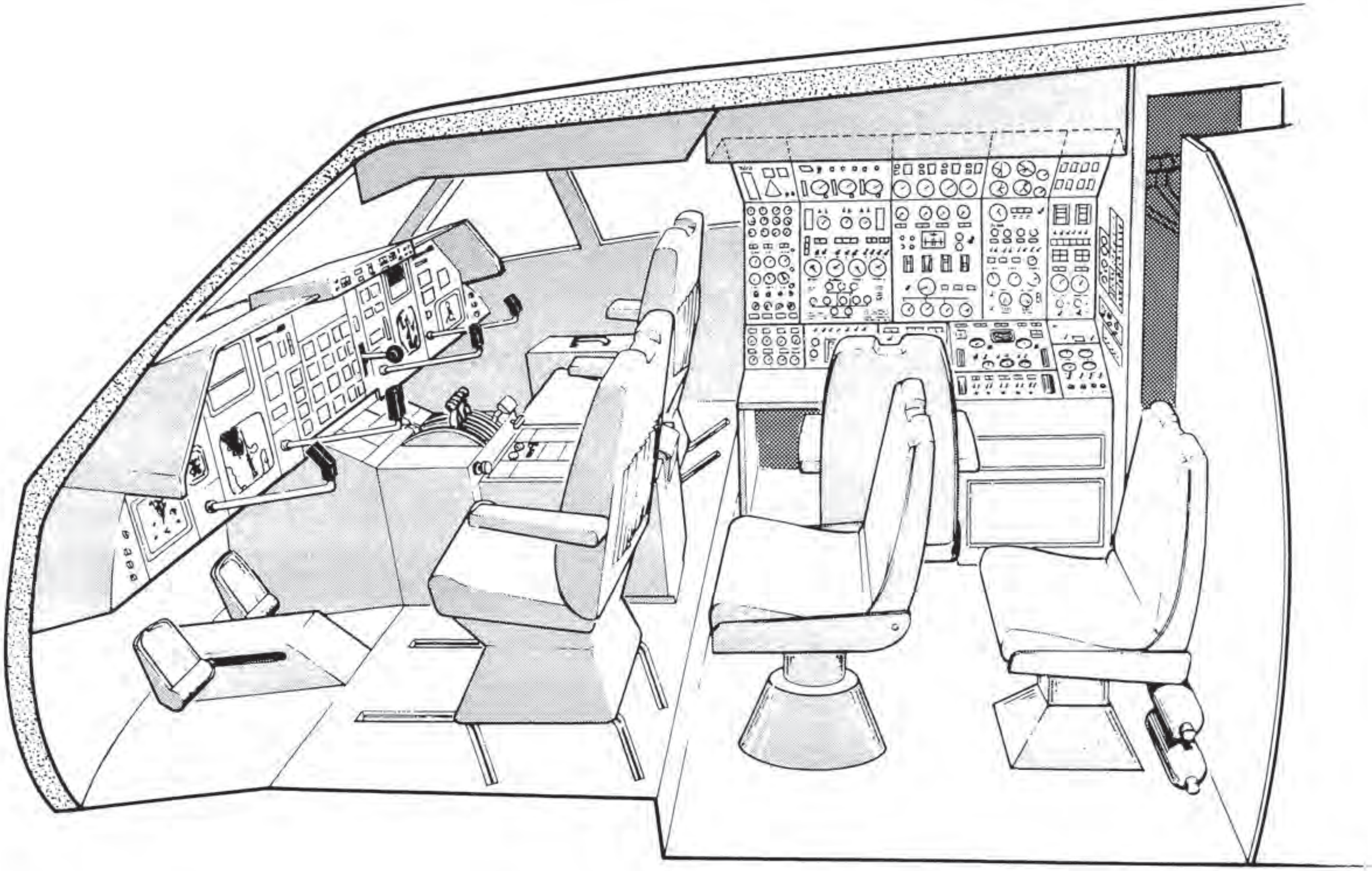

Figure 5-A. Flight Deck Arrangement

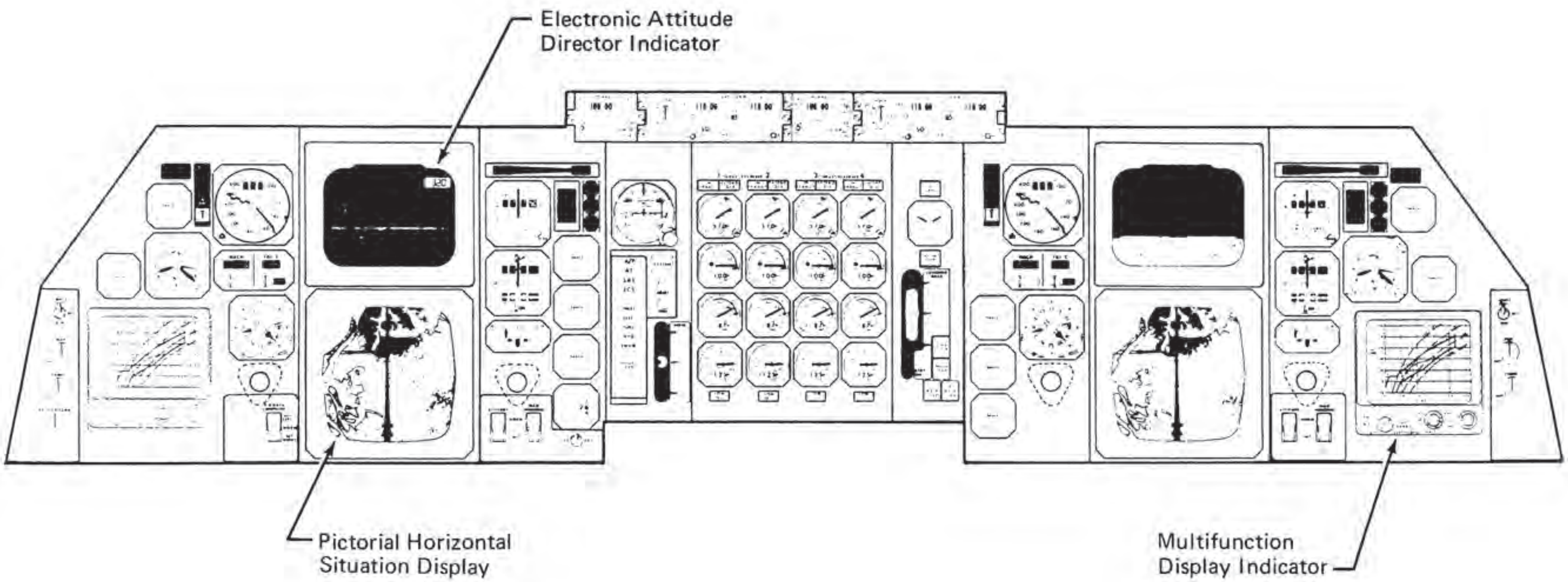

Figure 5-B. Pilots' Main Panel

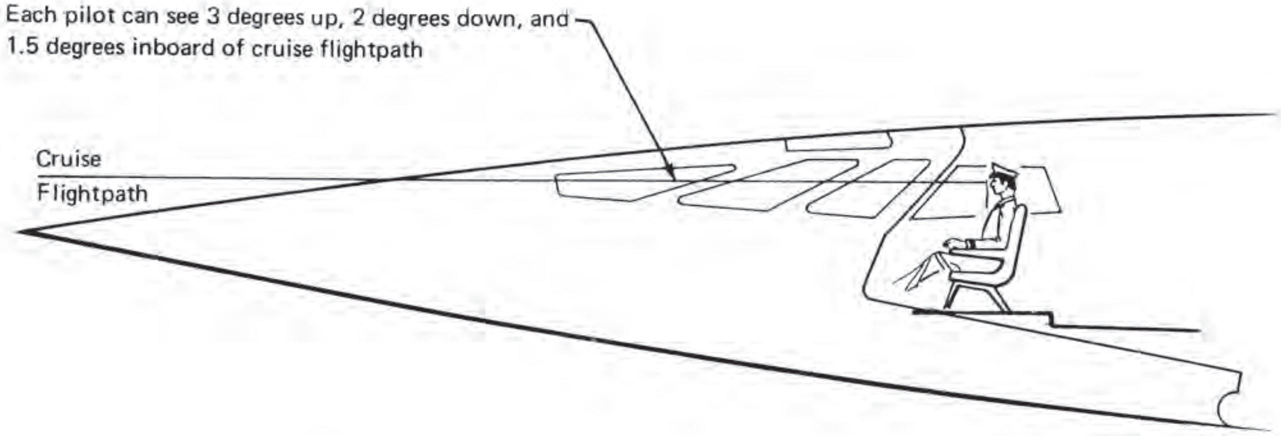

Figure 5-C. Supersonic Cruise Vision – Thru Forward Window

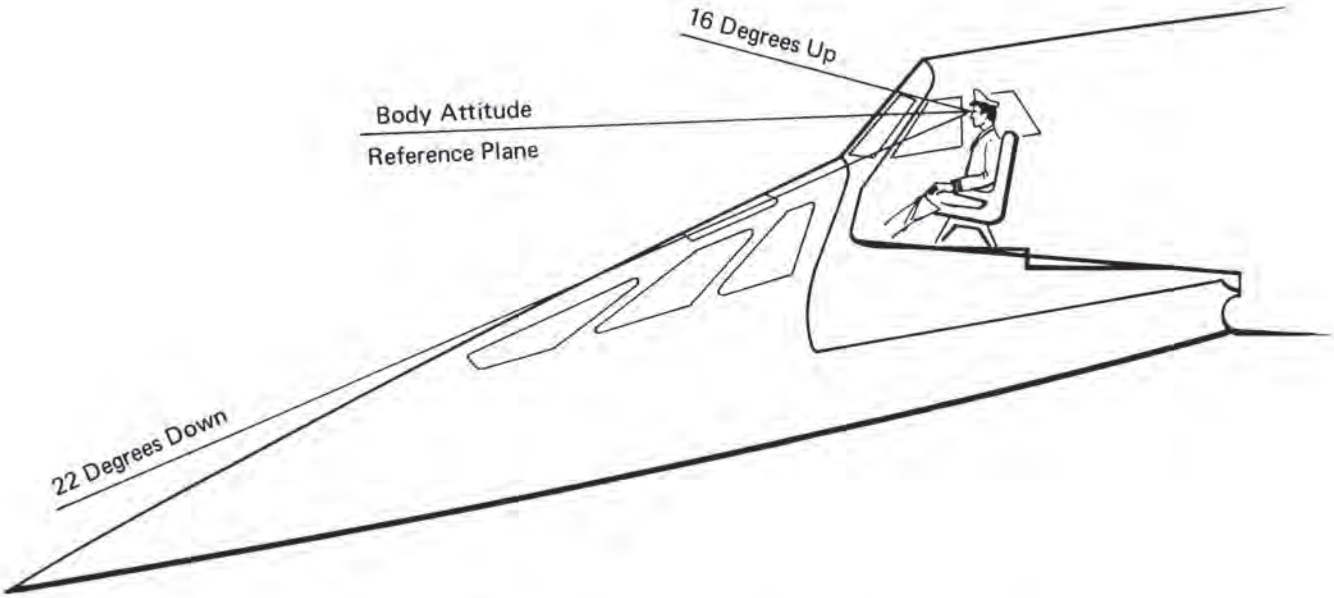

Figure 5-D. Approach Vision–Straight Ahead

STRUCTURES

Fuselage, Wing and Empennage

The Mach 2.7 cruise speed of the 2707-300 with its attendant higher operating temperatures due to air friction has dictated the use of a metal capable of withstanding these temperatures. Titanium alloy was chosen since it offers lightweight construction coupled with excellent fracture toughness, fatigue life, and thermal and load stability properties. In addition, superior resistance to burn-through affords a substantial fire safety advantage over aluminum construction. Recent developments of titanium alloys have improved physical and mechanical properties together with reduced raw material and fabrication costs are establishing titanium as a superior metal for aircraft construction. Items such as landing gear beams, bulkheads, firewalls, ducts, tanks, and struts are being fabricated today from titanium for Boeing's subsonic models.

The fuselage employs conventional skin, stringer and frame construction (Figure 6-A). The wing and empennage are assembled from multispars, ribs and sandwich type skin panels. Titanium alloy sandwich construction possesses excellent stiffness, fatigue resistance and strength to weight ratio characteristics as well as providing a high degree of aerodynamic smoothness. Two types of sandwich construction are employed for skin panels as illustrated in Figure 6-B. Truss core is composed of a central corrugation welded to flat face sheets and is used in the more heavily stressed middle section of the wing with the corrugations running spanwise. Stresskin is composed of a central honeycomb material diffusion bonded to flat face sheets. It is used for those skin panels over the wing and empennage surfaces which have not employed the truss core panels.

An extensive laboratory testing program has developed the basic engineering data necessary to ensure a structure capable of a minimum of 50,000 flight hours with fail-safe characteristics such that no undetected incipient failure can grow to catastrophic proportions.

Landing Gear

Materials

Landing gear major components are manufactured from vacuum remelted steel forgings with the exception of the truck beam which is made from maraging steel. Titanium alloy is used in the manufacture of some structural components where weight saving can be achieved. All structural pin joint lugs have margin for rework, are equipped with aluminum-bronze bushings and can be lubricated.

6Al-4V titanium alloy is used to the fullest extent in the landing gear hydraulics system. Stainless steel is also used for hydraulic components in both forging and casting applications. Teflon fabric epoxy bonded bearings which do not require lubrication are used on actuators.

Gear Design

Both nose and main gear are of conventional proven design. The main gear consists of an oleo-pneumatic shock strut attached to the center of a 3-axle truck assembly consisting of six dual wheels. The dual-tired nose gear incorporates a steering system. See Figures 6-C and 6-D. Spray and slush deflectors are installed to control material disturbed on the runway by the gear and prevent its ingestion by the engines.

Gear Actuation

Retraction and extension of all gears is accomplished hydraulically and controlled by an electrical sequencing system. Both nose and main gear retract forward to the stowed position allowing emergency free-fall capability after release of door and gear up-locks by standby system actuators.

Brake Control System

Two independent electrohydraulic brake systems are provided. The normal system adds brake pedal force signals to wheel acceleration signals, providing differential braking and individual dual wheel anti-skid control and completely separate hydraulic and electrical power sources. Automatic system switch-over, auto-braking upon retraction, and a hydraulic accumulator for parking brake pressure are also provided. Advanced materials, affording greater brake life at reduced weight, are used for the friction components in the brake assemblies.

Nose Gear Steering

An electrohydraulic nose gear steering system, with both limited authority rudder pedal control and manual knob control is provided at both pilots' positions. The system consists of two completely independent electrical control channels, controlling electrohydraulic servovalves.

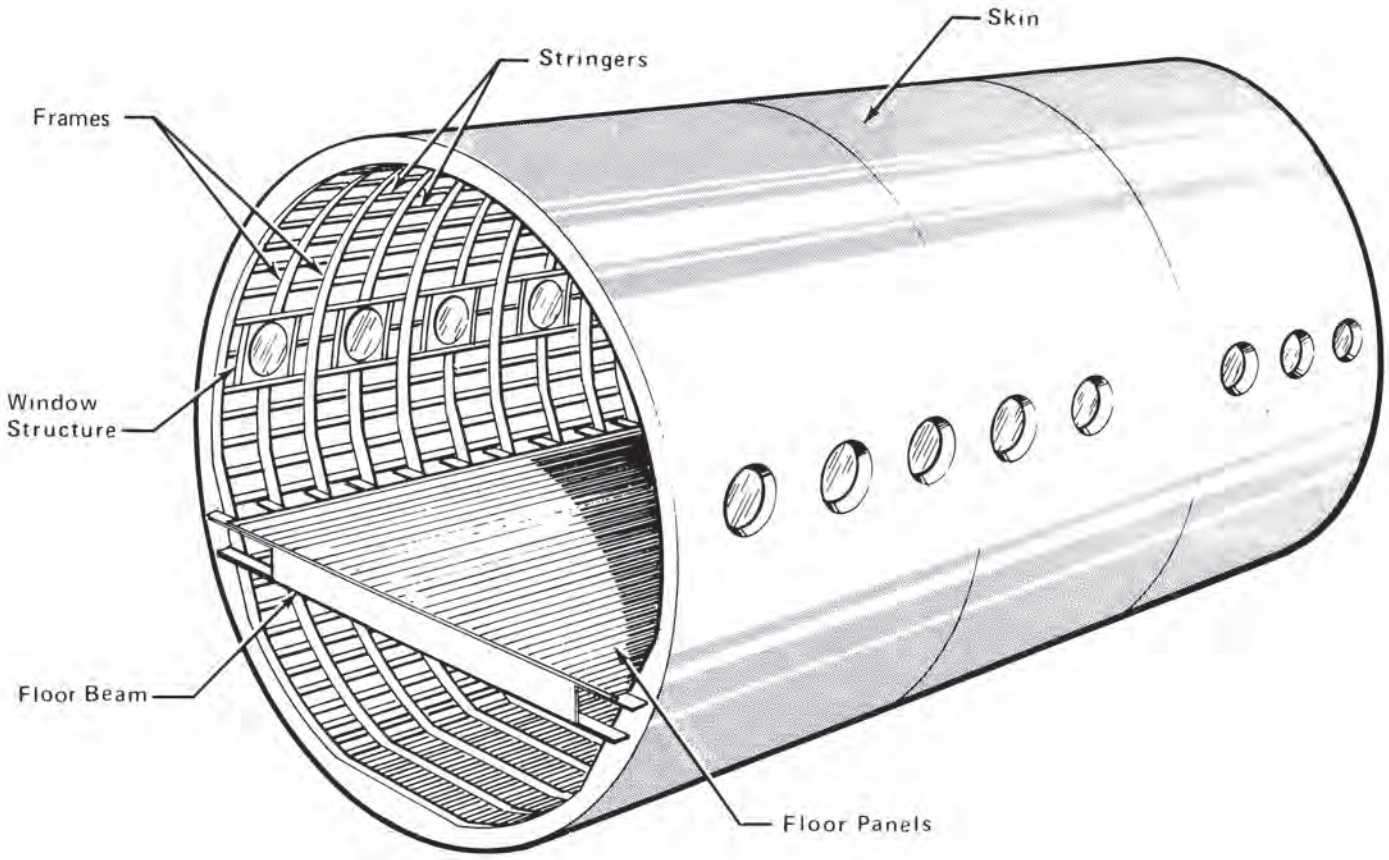

Figure 6-A. Typical Body Construction

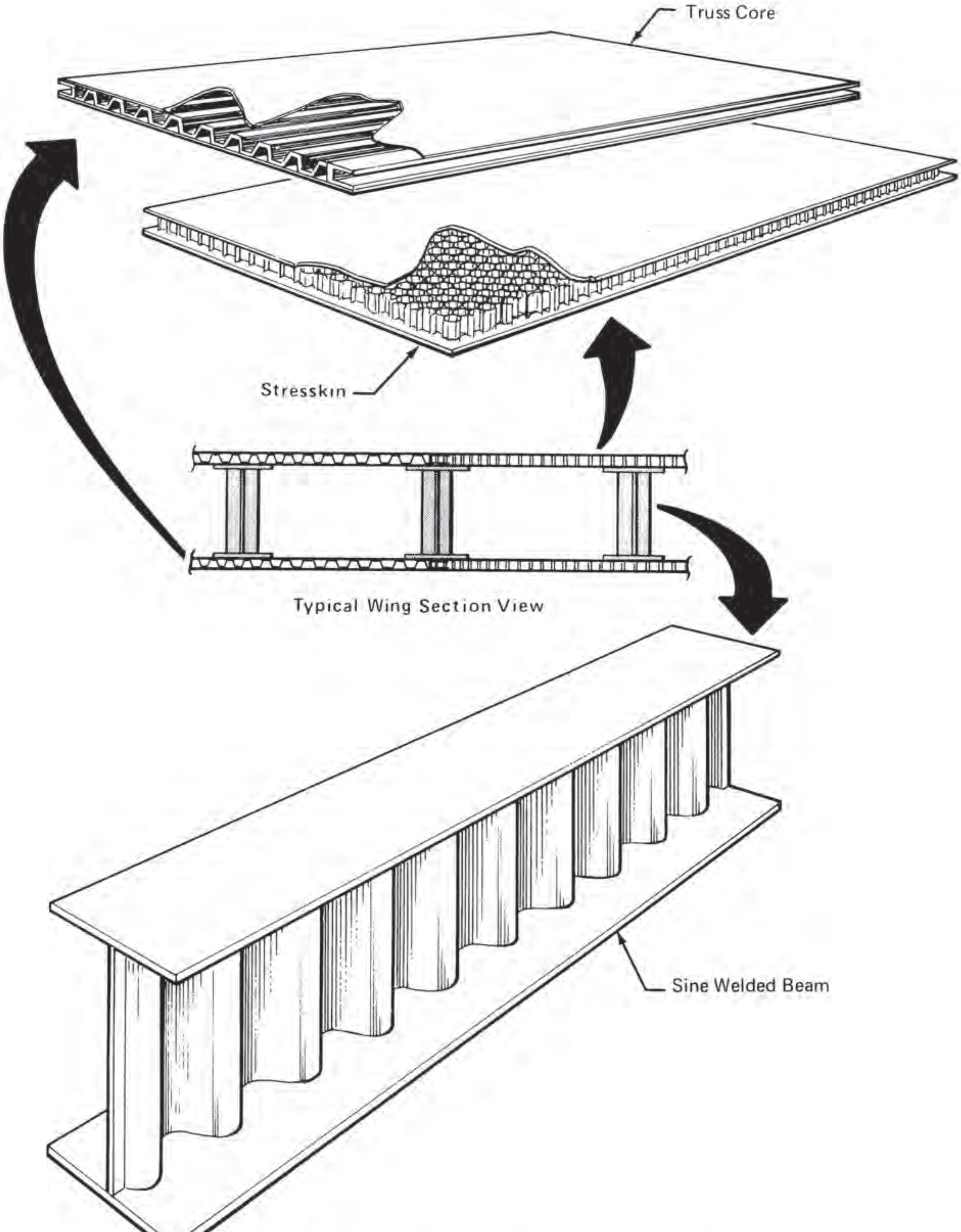

Figure 6-B. Typical Wing and Empennage Construction

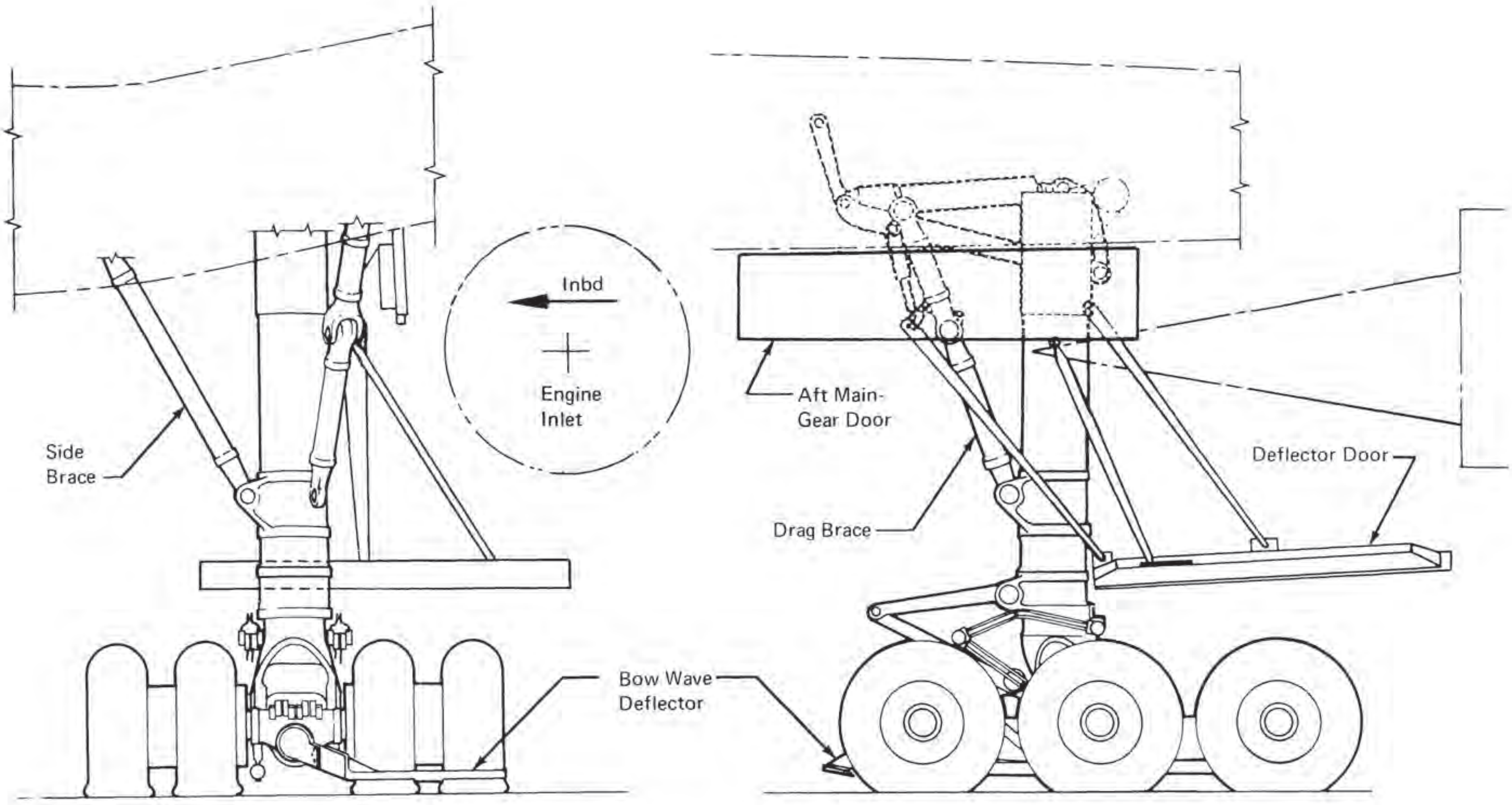

Front View

LH Side View (Looking Inbd)

Figure 6-C. Main Landing Gear

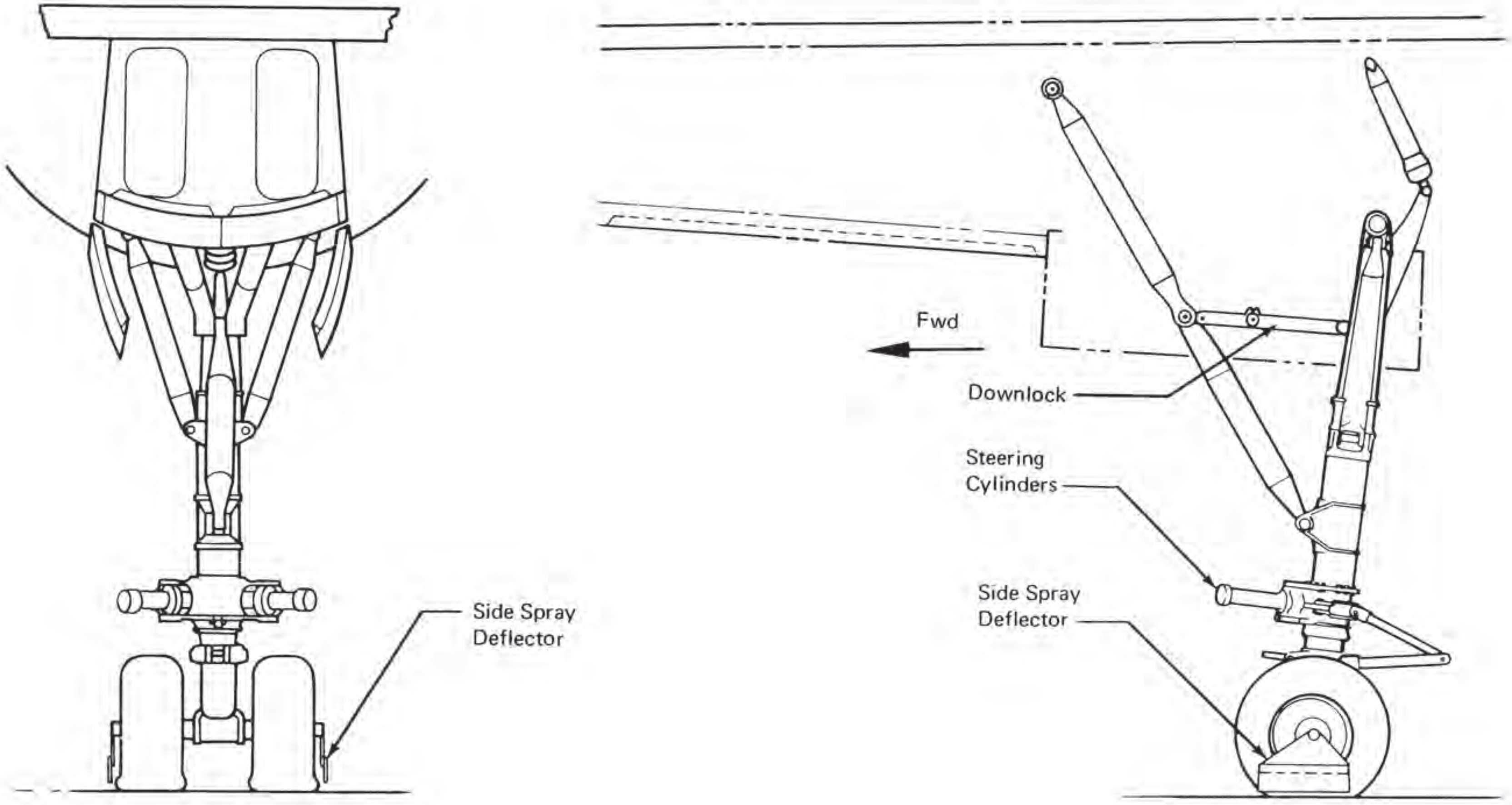

Front View

Side View

Figure 6-D. Nose Landing Gear

PROPULSION, ACCESSORY DRIVE AND FUEL SYSTEMS

Power Plant Installation

The 2707-300 airplane has four identical propulsion pods except for the thrust reverser discharge arrays which require minor adjustment between inboard and outboard positions. Each pod consists of an axisymmetrical intake, an engine, and an exhaust nozzle assembly with thrust reverser and sound suppressor arranged as shown on Figure 7-A.

The engine is a General Electric GE4 afterburning turbojet developing an installed thrust of more than 65,000 pounds. It is a single rotor turbojet with a nine-stage compressor driven by a two-stage turbine and equipped with a close-coupled afterburner for thrust augmentation. The exhaust system provides a convergent-divergent variable area nozzle. The primary nozzle is variable to provide optimum pressure ratio and temperature, with the thrust reverser using the variable segments of the primary nozzle as reverser blockers. The secondary nozzle houses the retractable sound suppressor and provides guided expansion of the exhaust gas by being pressure positioned to give the optimum area ratio.

A shroud is wrapped around the center part of the engine to form a duct for the secondary air which is directed through the Environmental Control System heat exhangers installed on the engine. The engine accessories are installed on the shroud and are readily accessible by two hinged side cowl panels of such size as to be easily operated manually.

The engine pod is supported from the wing structure by the engine support beam, which provides structural attachment for the front and rear mounts.

The engine services and mount disconnects are readily accessible for pod removal. The intake and nozzle assemblies are bolted directly to the fore and aft flanges of the engine.

Intake and Control

Each propulsion pod is fitted with an axisymmetric intake to provide stable air flow to the engine compressor at required pressure levels during all speed regimes. Intake contours and areas are varied by means of a translating centerbody and movable doors in the throat area of the outer cowl. The geometry for each intake is independently regulated by electrohydraulic control channels.

Accessory Drive Subsystem

Each of the four Accessory Drive Systems (ADS) power two hydraulic pumps and one electrical generator. These ADS gearboxes, which are shaft driven by the engines, are located in the wing aft of the rear spar inboard of each driving engine as shown on Figure 7-B. All four gearboxes are identical and allow left or right airplane installation without gearbox inversion.

Access is through a nonstructural door in the wing trailing edge lower surface. Shafts are Bendix type with bolted end flanges. Containment is provided to prevent shaft flailing damage in event of torque tube or coupling failure. A decoupler controlled from the flight deck is installed in the angle gearbox.

An engine starter and an air-conditioning boost compressor are mounted in each engine pod and use power transmission shafting common to the engine accessory gearbox.

Fuel System

The airplane uses standard "Jet A" commercial aviation kerosene.

The fuel supply is contained in four main and eight auxiliary tanks located in the wing and aft body as shown on Figure 7-C. All tanks are integral type construction and are vented to atmosphere through an unpressurized system. Fuel capacity is approximately 71,000 gallons or 475,000 pounds.

The engines are continuously fed from the main tanks which are replenished from the auxiliary tanks under a simple system of sequential fuel management. Reserve fuel requirements are maintained in the main tanks. Airplane balance changes due to aerodynamic center of pressure movement and fuel consumption are controlled by the sequential system of tank selection.

A major portion of the heat from the airframe systems and all engine system heat is rejected to the fuel through heat exchangers located in the fuel lines to the engines.

Fueling is accomplished through a pressure system using four standard fueling nozzles. Fuel loading flow time for a typical trans-Atlantic mission is approximately 27 minutes.

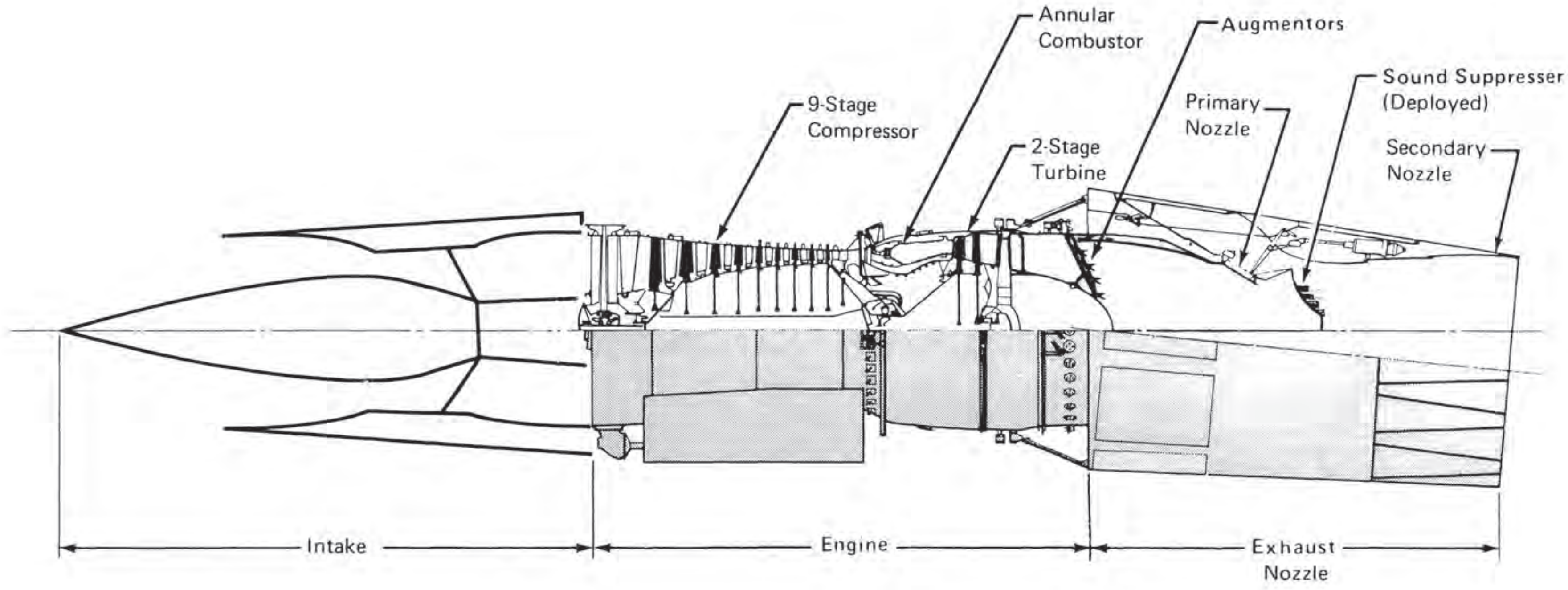

Figure 7-A. Propulsion Pod

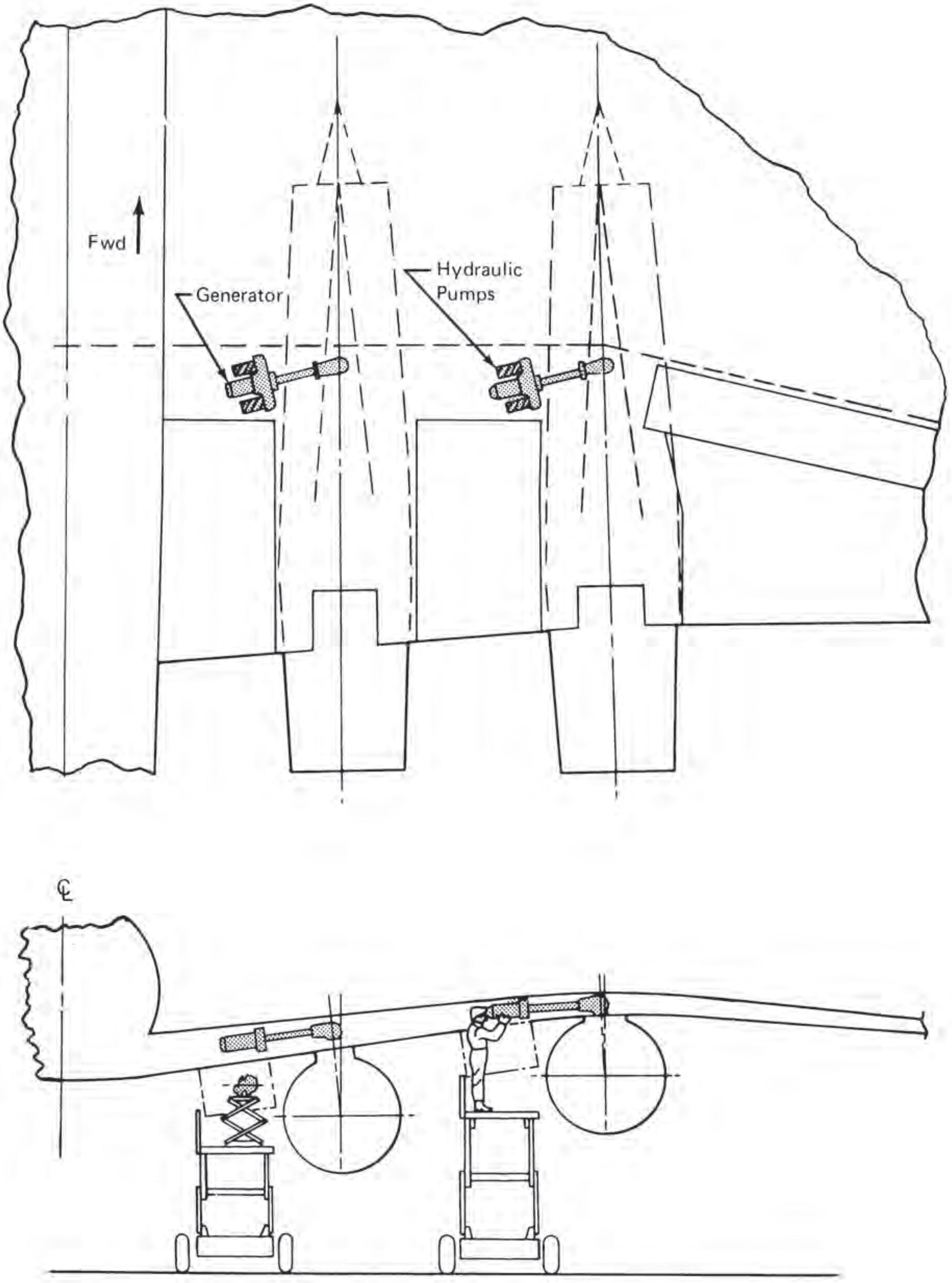

Figure 7-B. Accessory Drive Installation

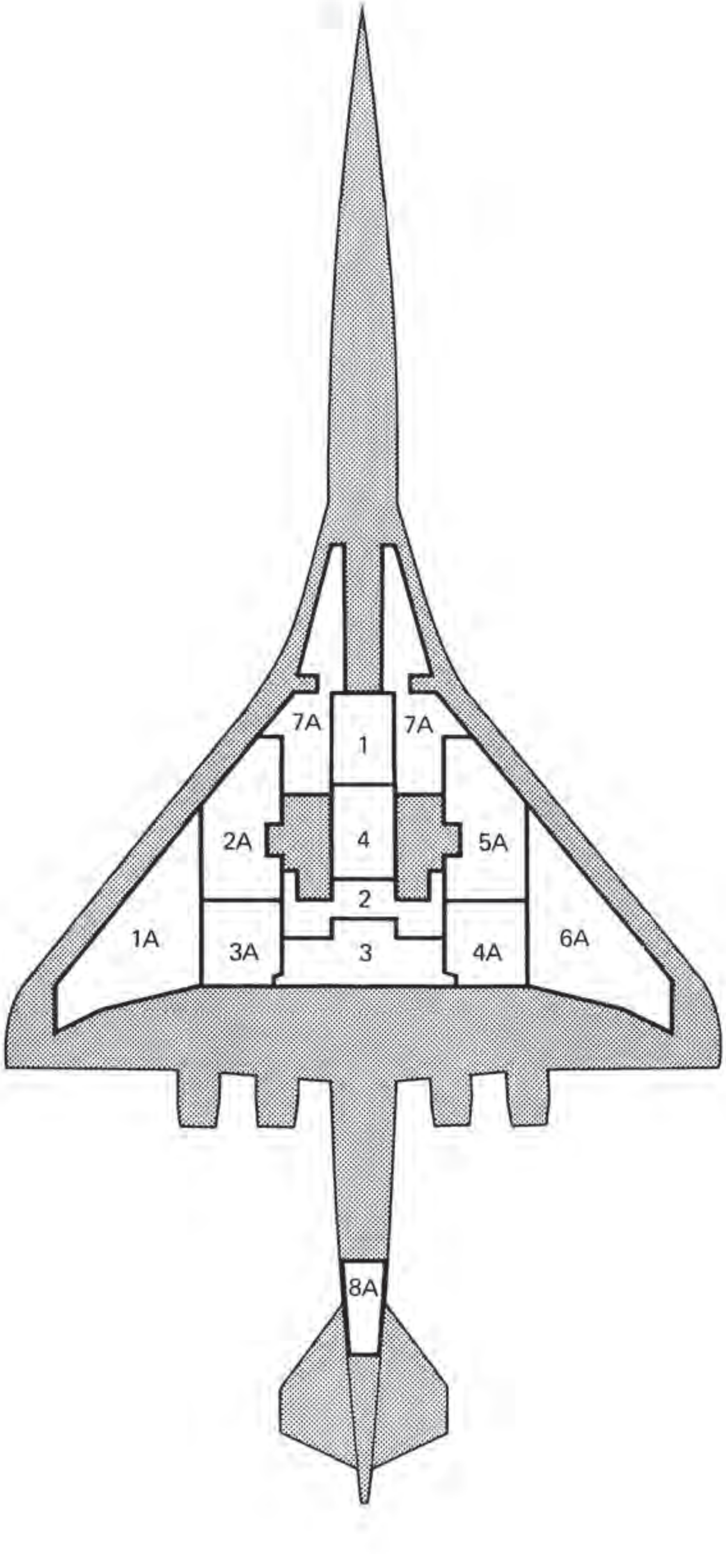

Figure 7-C. Fuel Tanks

ENVIRONMENTAL CONTROL SYSTEM

The environmental control system (ECS) shown on Figure 8-A consists of four identical subsystems which receive their pressurized air from the propulsion engine compressors. Conventional air cycle cooling packs are located in the lower mid body from which cool air is temperature regulated and distributed to four temperature controlled zones in the pressurized cabin. Prior to cooling by the air cycle machine, the engine bleed air is preconditioned by using fuel, cabin exhaust air and engine by-pass ram air as heat sinks through a heat transport loop as diagramed in Figure 8-B. Exhaust air from the main cabin is used to maintain temperature control of cargo compartments, electrical and electronic equipment racks, wheel wells, and airplane equipment bays. ECS boost compressors and primary cooling circuits are installed within the nacelle pods to insure that duct temperatures outside the firewall are below the auto ignition temperature of fuel or hydraulic fluid.

The ECS furnishes the passenger cabin with conditioned fresh air premixed with filtered recirculated air which provides smoke, odor and temperature gradient control. In addition, an individually adjustable supplemental air outlet is accessible to each passenger.

Depressurization

In the event of component or structural failure such as loss of a door seal or window blowout, the system is designed to prevent catastrophic loss of cabin pressure. As soon as such a pressure loss is sensed, the cabin air inflow is boosted into high flow to limit cabin pressure degradation. At the same time, the airplane is descended from cruise altitude to an altitude at which the flight may be continued subsonically. Supplementary oxygen is provided by means of masks which are automatically presented to each occupant should the cabin altitude increase above 14,000 feet.

Cosmic Radiation

Cosmic radiation consists of two prime components, galactic and solar radiation. Galactic radiation from the stars, in both its primary and secondary components, is of such low levels that it creates no hazard to either flight crew or passengers. Solar flares may occasionally generate dose rates in excess of the established human tolerance levels. These solar flares occur during the two years before and after maximum sunspot activity which takes place every eleven years. Flares of sufficient intensity to affect SST flights are rare however, believed by eminent radiobiologists to occur no more frequently than twice each decade. Due to interaction with the earth's magnetic field, maximum solar flare activity is confined to the polar regions. Consequently, supersonic flights over the balance of world routes will not be affected. However, both advance forecasts from space monitoring activities and on-board radiation intensity measuring sensors provide ample warning to permit descent to a lower altitude during the rare occasion of an onset of a solar particle event having significant intensity to require avoidance.

Ozone

Stratospheric free ozone concentration at 64,000 feet is approximately 6 parts per million. This concentration is reduced to 0.1 part per million within the aircraft by the environmental control system. Free ozone is converted into oxygen by the high temperatures (over 1000°F) resulting from the engine inlet and compression stages from which the cabin air is extracted. Further conversion is provided by catalytic action with nickel plated fins on the heat exchangers. An ozone monitoring system is installed to provide the flight crew with constant indication of ozone concentration.

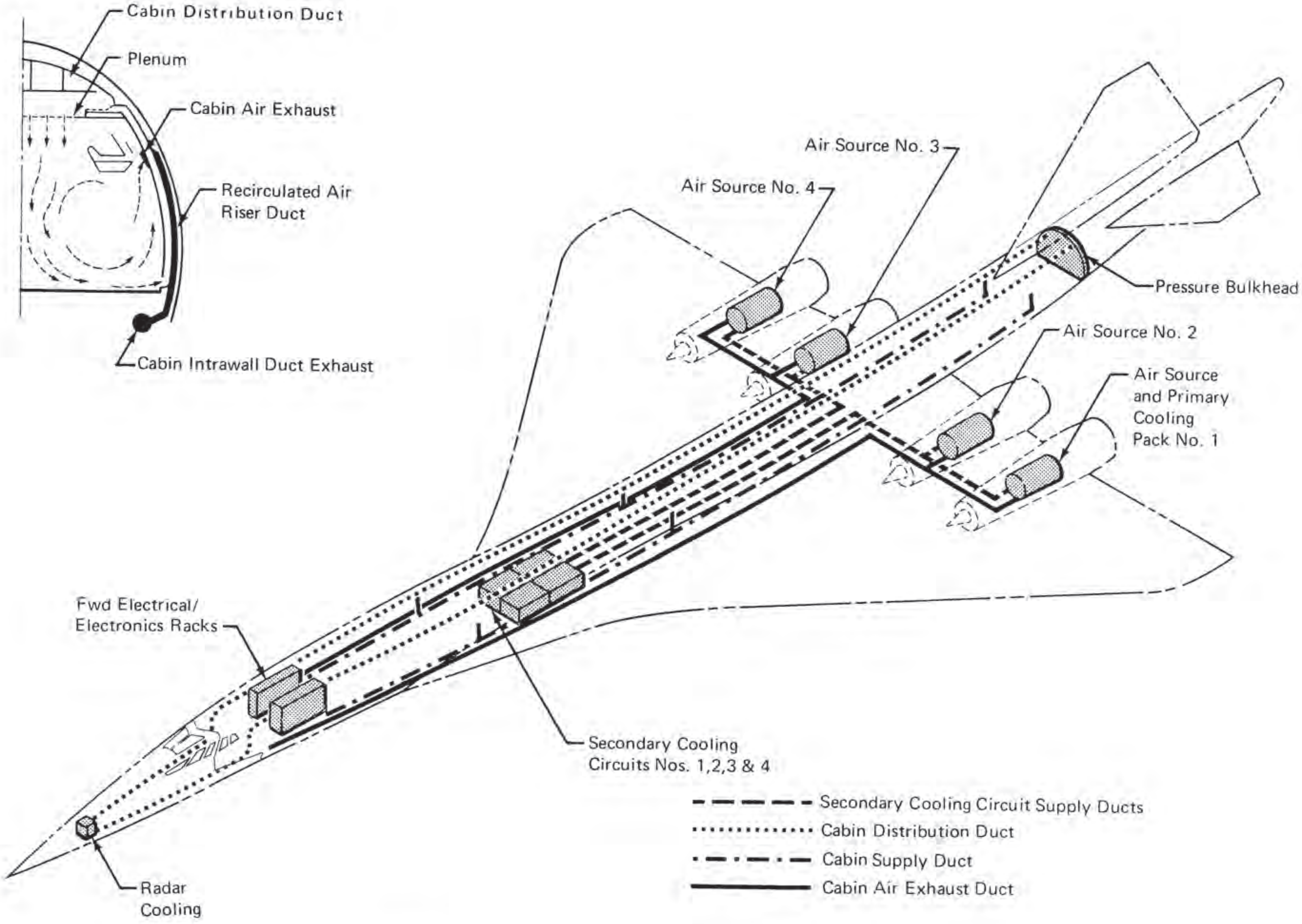

Figure 8-A. Environmental Control System Arrangement

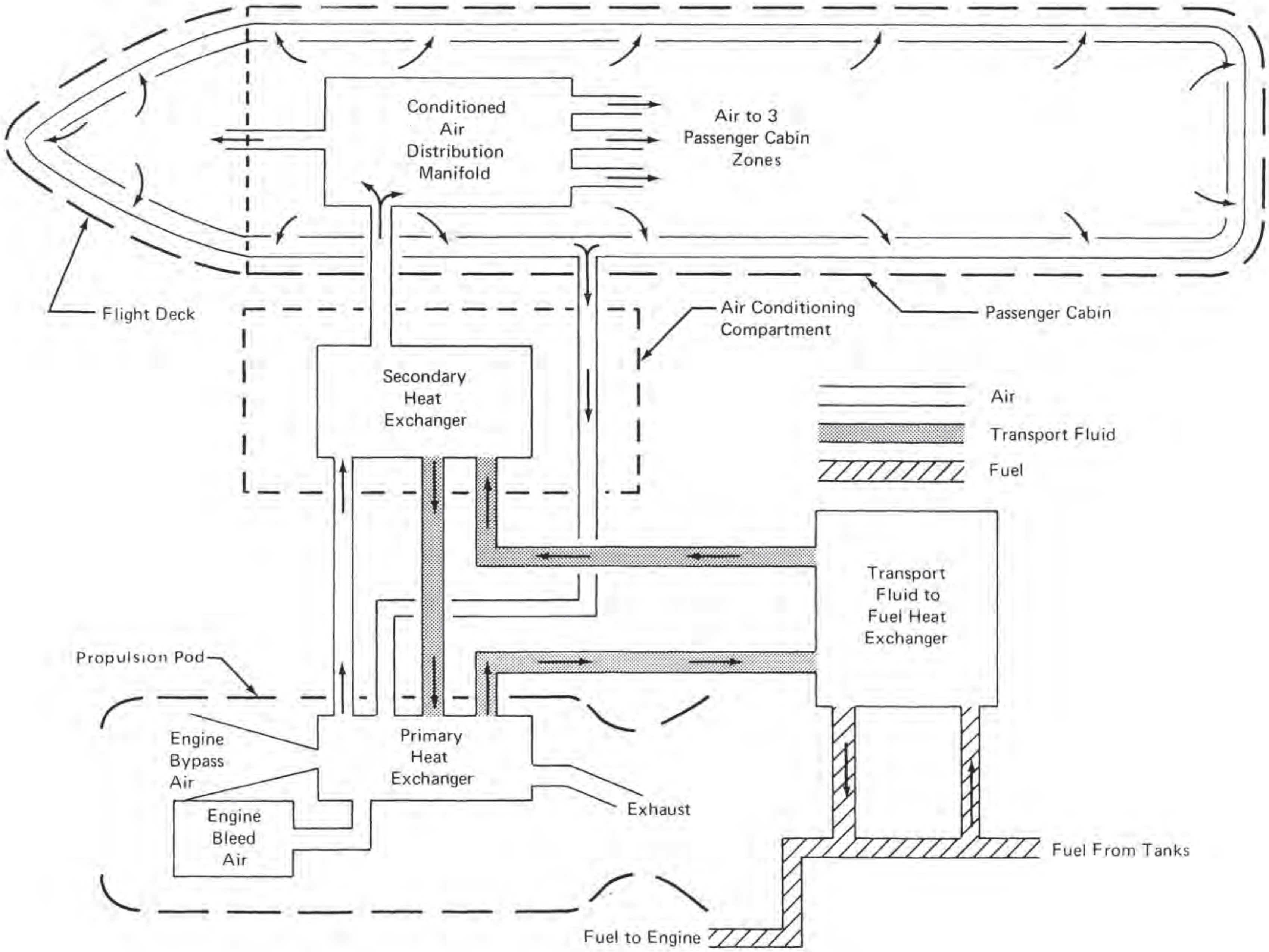

Figure 8-B. Environmental Control System Heat Sink Block Diagram

FLIGHT CONTROL SYSTEMS

The basic configuration of the 2707-300 permits a relatively simple, light weight flight control system. The flight control surfaces employed are identified in Figure 8-C. All primary flight control surfaces are hydraulically powered by multiple actuators which derive their source of hydraulic pressure from separate independent hydraulic systems such that quadruple redundancy is provided. An equivalent degree of redundancy exists in the electrical and mechanical signal paths from the pilots' controls to the control surface actuators. The system design has been evolved from the proven technology of powered flight controls used in current subsonic and supersonic aircraft.

Lateral Control

Lateral control is provided by spoilers and flaperons. The spoilers operate at all speeds and are of the balanced slot deflector type consisting of both upper and lower sections. The airstream passing between them provides balancing air loads on the surfaces which materially reduce operating hinge moments. Flaperons, as the name implies, function as both flaps and ailerons in low speed flight. During high speed flight the outboard flaperons are locked out and the inboard flaperons function as lateral controls.

Longitudinal Control

Longitudinal control is provided by movement of the horizontal stabilizer which is fitted with geared elevators to increase control power at all speeds.

Directional Control

A conventional rudder is used to provide directional control. The rudder is divided into three segments. All segments operate in the low speed regime, while the upper segment is locked out during high speed flight.

High Lift System

An effective high lift system which employs full span leading and trailing edge flaps is used. The flaperons deploy in conjunction with the flaps for high lift and continue to operate as lateral control surfaces about their extended position.

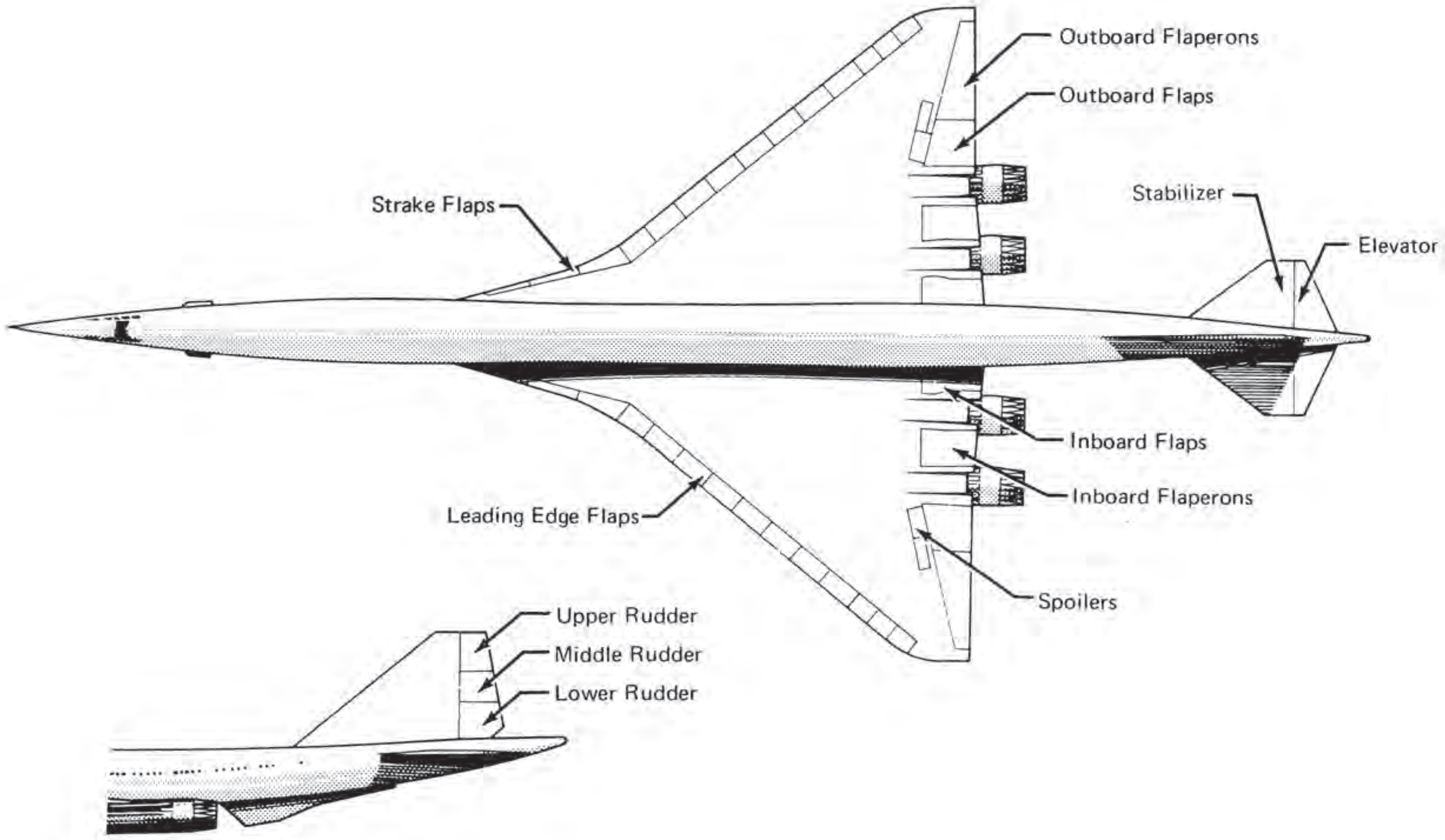

Figure 8-C. Flight Control Surfaces

HYDRAULIC POWER SYSTEM

The hydraulically powered functions are supplied by four independent utility systems and one auxiliary system. Figures 8-D and 8-E show a detail diagram of one power system and a block diagram showing how the power systems are connected to the subsystems for maximum redundancy. The eight pumps which operate at a maximum of 250°F inlet temperature are rated at 80 gallons per minute output at 4000 pounds per square inch. Two pumps are installed on each of the four engine driven accessory drive system gear boxes. The pump case drain filters, pump pressure filters and system return filters are installed in modules located in the wing. Hydraulic reservoirs are installed in each right and left wheel well area.

An auxiliary system, whose function is to supply power to the brakes during towing and is a third power source for landing gear extension, is located in the right hand main gear well.

All equipment requiring maintenance or removal between airframe overhauls is installed with self-sealing disconnects so that the components may be removed with minimum air inclusion and fluid loss.

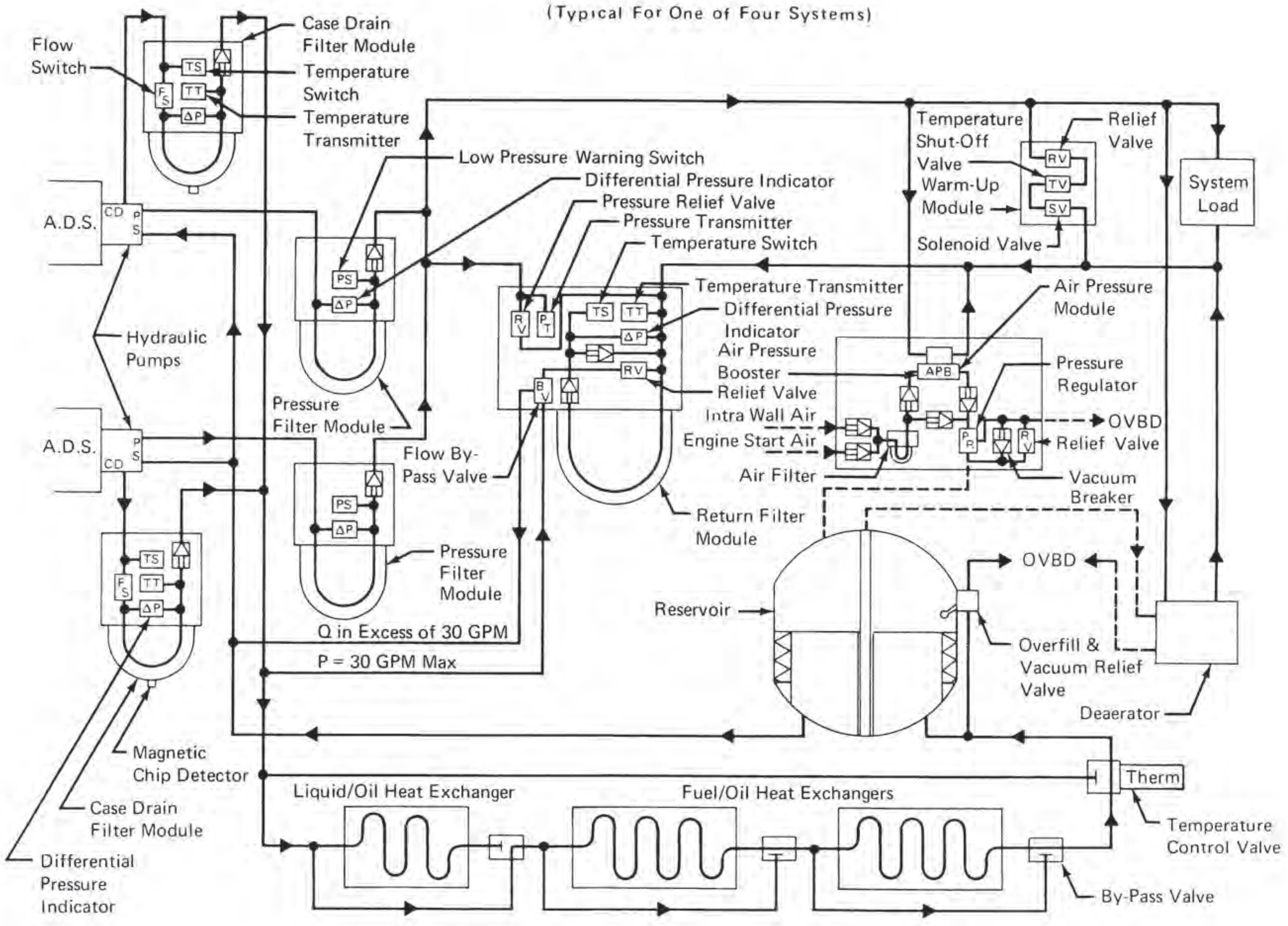

Figure 8-D. Hydraulic System Schematic

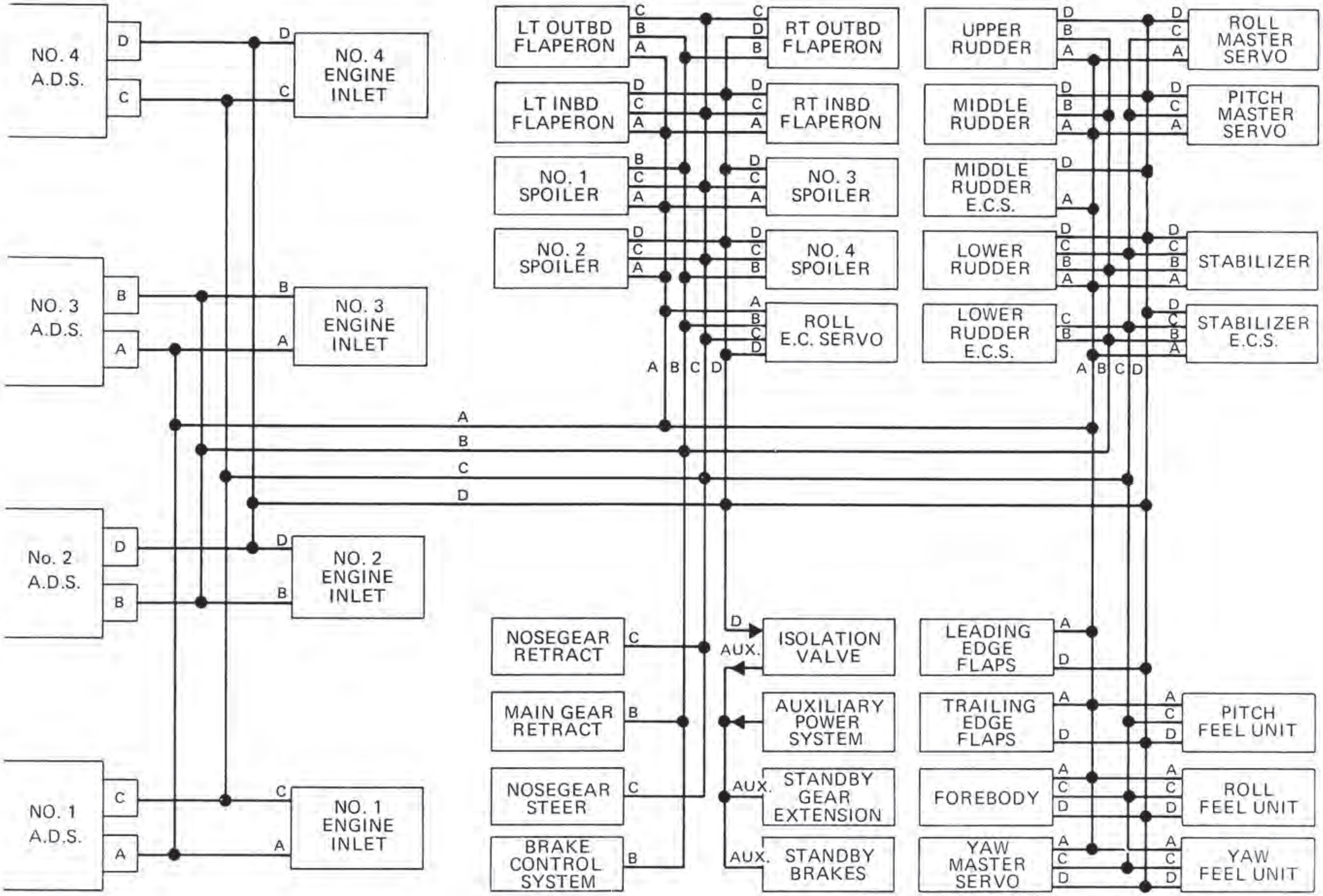

Figure 8-E. Hydraulic System Block Diagram

ELECTRICAL POWER SYSTEM

The electrical power system comprises all electrical equipment required for generation, control, conversion, storage and distribution of electrical power. A basic system schematic is shown in Figure 8-F.

Power generation is provided by four variable speed/constant frequency (VSCF) generation channels, each consisting of a variable speed generator having a nominal rating of 75 KVA, special high frequency high voltage generator feeders, a step-down transformer, a converter-filter, and a generator control unit (GCU). The four oil cooled generators mounted on the accessory drive system (ADS) supply primary power of variable frequency proportional to engine speed. This power is transmitted via the primary feeders to the electrical/electronics rack where it is processed and delivered to the main busses through the generator circuit breaker at 400 Hz constant frequency 115/200 volt, three-phase power such as is used on present day jet transports. Generator control and protection, operational annunciation, malfunction detection, and self-test are provided by the generator control unit.

The system is designed such that no single malfunction can affect the complete power system. Power capacity is adequate to provide for dispatch with one generation channel out based on a galley load of 60 KVA. A utility bus transfer scheme is provided to distribute utility type loads to the opposite side when one generation channel is inoperative. The system can maintain all flight modes with two generation channels inoperative and subsonic flight with three channels inoperative.

The electrical power system protection encompasses design features for selectively de-energizing those sections of the system that have become faulted. Protection coordination is provided between load feeder circuit breakers, bus circuit breakers, and generating system breakers. Separate circuits and busses are used to supply power to redundant subsystems. Indicators, meters, and switches are provided at the crew station to display the status of the system and to permit overriding automatic controls manually. One external power connector is located in the nose wheel area for connection of electrical power to the system from an external source.

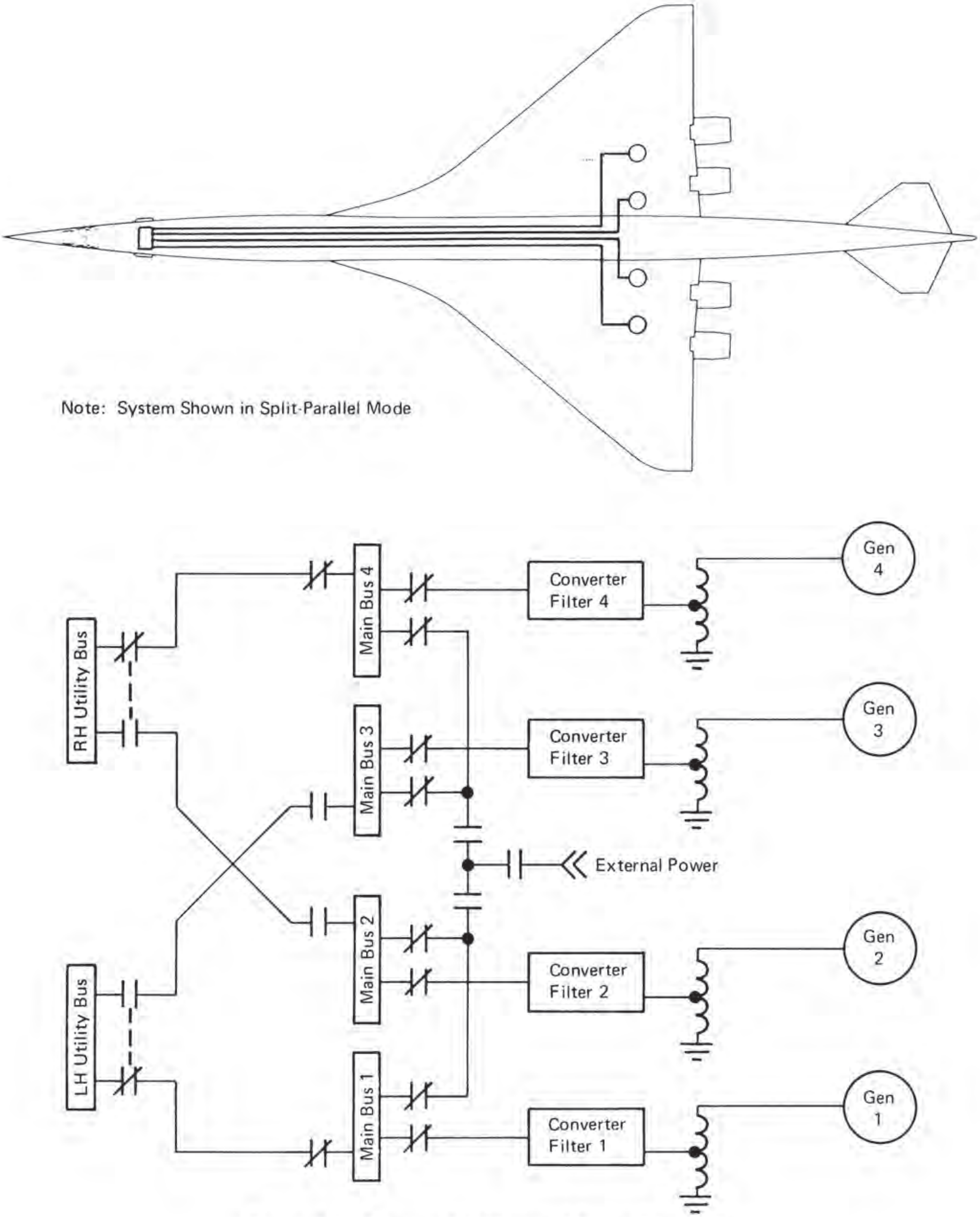
Note: System Shown in Split-Parallel Mode

Figure 8-F. Primary AC Electrical Power Distribution

COMMUNICATION/NAVIGATION SYSTEM

An integrated communication/navigation system, utilizing advanced microelectronics techniques is installed to serve the functions noted in Table 8-1. Significant advantages of this system are: reduced size and weight; improved reliability and maintainability; improved system performance monitoring, malfunction detection and isolation; and simplification of crew work load. An Airborne Integrated Data System (AIDS) is included, and space provisions are allocated for clear air turbulence detection and collision avoidance systems installations.

The heart of the advanced communication/navigation system is a central processor which receives raw data from the various avionic sensors and subsystem functional elements, performs system computations and data processing functions, performs automatic performance monitoring and malfunction detection and isolation tasks, and develops the signals to drive the flight instruments and displays. The system includes integration of the associated controls and displays into a central console (one for each flight crew member) with a resultant significant decrease in required panel space on the flight deck. The inertial navigation function provides continuous position reporting and indication of time and distance to destination or check point without manual computation.

The system concept for the captain's functions is shown on Figure 8-G. Identical, but independent, capabilities are provided at the first officer's position to enhance reliability.

Size and weight are reduced by integration techniques, such as using the same circuit or system element for several functions, and by the extensive use of advanced microelectronics including hybrid modules and metal-oxide semiconductor (MOS) arrays. The considerable use of MOS is made possible by the conversion of many functions from analog to digital and by the relatively low real time speed requirements of aircraft communication/navigation systems when performed by machine rather than human computation.

Reliability is improved by the reduction in interconnections which are prime contributors to avionic failures. Subsystem elements common to many functions, such as the processor and data link, are implemented with required redundancy to provide fail-operational capability for all critical functions. Maintainability is improved by the AIDS and the extensive use of fault isolation circuitry and automatic self-test techniques which allows rapid identification of the failed unit and reduced post-installation functional test time.

An extremely attractive feature of the system is the inherent flexibility to functional changes which allows ease in exercising airline options and in the incorporation of new systems as requirements become defined. New systems currently under development within the SST time frame include independent landing monitors, collision avoidance, and clear air turbulence detection.

Table 8-1.—SST 2707-300 Communication/Navigation Functions

Function	Quantity
Radio Navigation	
Air Traffic Control (ATC)	2
Distance Measuring Equipment (DME)	2
Automatic Direction Finding (ADF)	2
Radio Altimeter	2
VHF Navigation (G.S., LOC., VOR)	2
Marker Beacon	1
Inertial Navigation	3
Air Data Computers	3
Weather Radar	2
Communications	
*VHF	2
*VHF Satellite	
HF	1
Flight Interphone	1
Service Interphone	1
Passenger Address (PA)	1
Selective Calling (Selcal)	1
Cockpit Voice Recorder	1
Flight Data Recorder	1
Airborne Integrated Data System (AIDS)	1
Space Provisions Only	
VHF Transceiver (3rd set)	1
Clear Air Turbulence Detector (CAT)	1
Collision Avoidance System (CAS)	1
Loran	1
Distance Measuring Equipment (DME) (3rd set)	1

*VHF transceiver is required for VHF Satcom capability, therefore, functions cannot be used simultaneously.

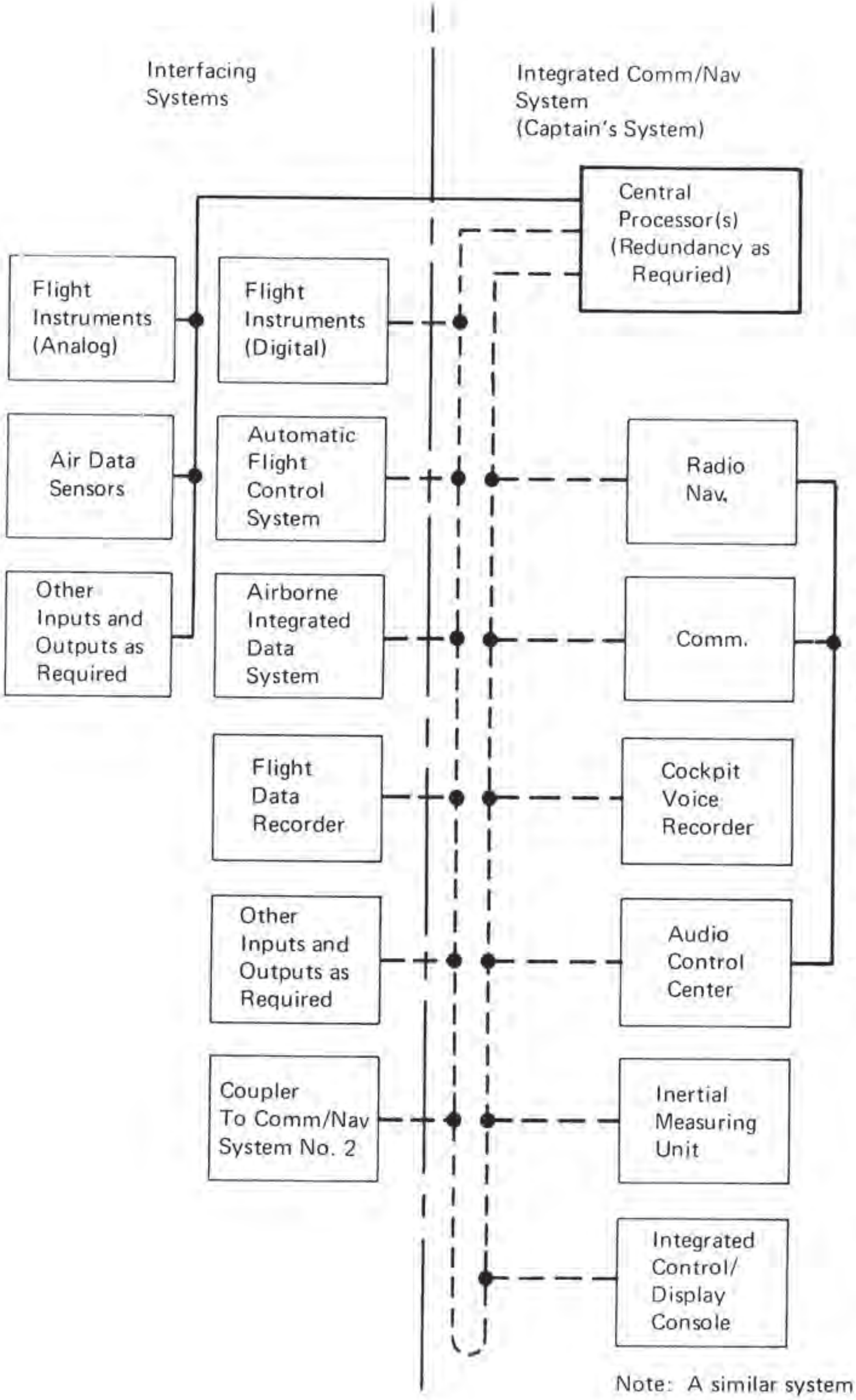

FUNCTIONS PROVIDED

Radio Navigation
- ATC
- DME
- ADF
- Radio Altimeter
- Glideslope
- Localizer
- VOR
- Marker Beacon
- Magnetic Heading

Inertial Navigation

Air Data Computations

Communications
- VHF
- VHF Satellite
- HF
- Interphone
- Passenger Address
- Selcal
- Cockpit Voice Recorder
- Flight Recorder

Associated Controls and Displays

Legend:
——— Hardwired
– – – – – Digital Data Link (Redundant)

Note: A similar system is provided for the First Officer

Figure 8-G. Communication/Navigation System

PERFORMANCE

Payload/range performance of the 2707-300 for standard supersonic operation at Mach 2.7 is shown on Figure 9-A with its corresponding typical flight profile on Figure 9-B. The high cruise altitude of over 60,000 feet creates a new plateau for traffic movement which reduces the congestion at the subsonic altitudes of 30,000 to 40,000 feet.

The takeoff distance, lift off speed, and community noise are shown on Figure 9-E as are the approach and landing characteristics. Runway distance requirements are compatible with current intercontinental airports. The noise levels perceived under the flight path, both on takeoff and landing approach, are below those generated with present intercontinental jet transports and are expected to be within the new subsonic noise standards proposed by the FAA. However, the noise levels heard to the side of the runway require development of advanced sound attenuation. Boeing and General Electric are working on a major program of noise reduction aimed primarily at solving the laterally dispersed noise problem.

Ride qualities during cruise are considerably better than today's subsonic jets since the wing design is less responsive to gusts and gust intensity is less at the higher altitudes. Figure 9-D indicates that the average disturbance on a Mach 2.7 trip at 60,000 ft altitude is an order of magnitude less than that experienced by a 707 flying the same distance.

Although the 2707-300 is designed principally for long range intercontinental routes at supersonic speed, practical operating requirements dictate good subsonic performance characteristics for maximum utility where sonic boom generation is restricted. Since subsonic range is nearly equal to supersonic range as shown on Figure 9-C, long range subsonic cruise speed offers the possibility of subsonic overland flight segments at speeds higher than those of competing subsonic aircraft. Flight times will be shorter and flight altitudes higher relative to competing subsonic jets.

Engine Failure

Should an engine fail under any flight condition, the airplane is controllable by either the pilot or autopilot, using primary flight controls. If such failure were to occur at the midpoint of a maximum range route, sufficient power and fuel are available to complete the flight subsonically with adequate fuel reserves for safety.

Cruise Speed Determination

The choice of Mach 2.7 as the cruising speed resulted from comprehensive studies of various speeds and their attendant temperature effect on weight, complexity, reliability and cost of all the major systems and components. The changes in cost of the total airframe and engines, daily utilization and fuel costs were used in determining the effect of speed on operating costs. These data indicate that the operating costs remain nearly constant up to about Mach 2.7, but rise substantially above this speed. The chosen speed is also high enough to avoid early obsolescense without incurring excessive development risk.

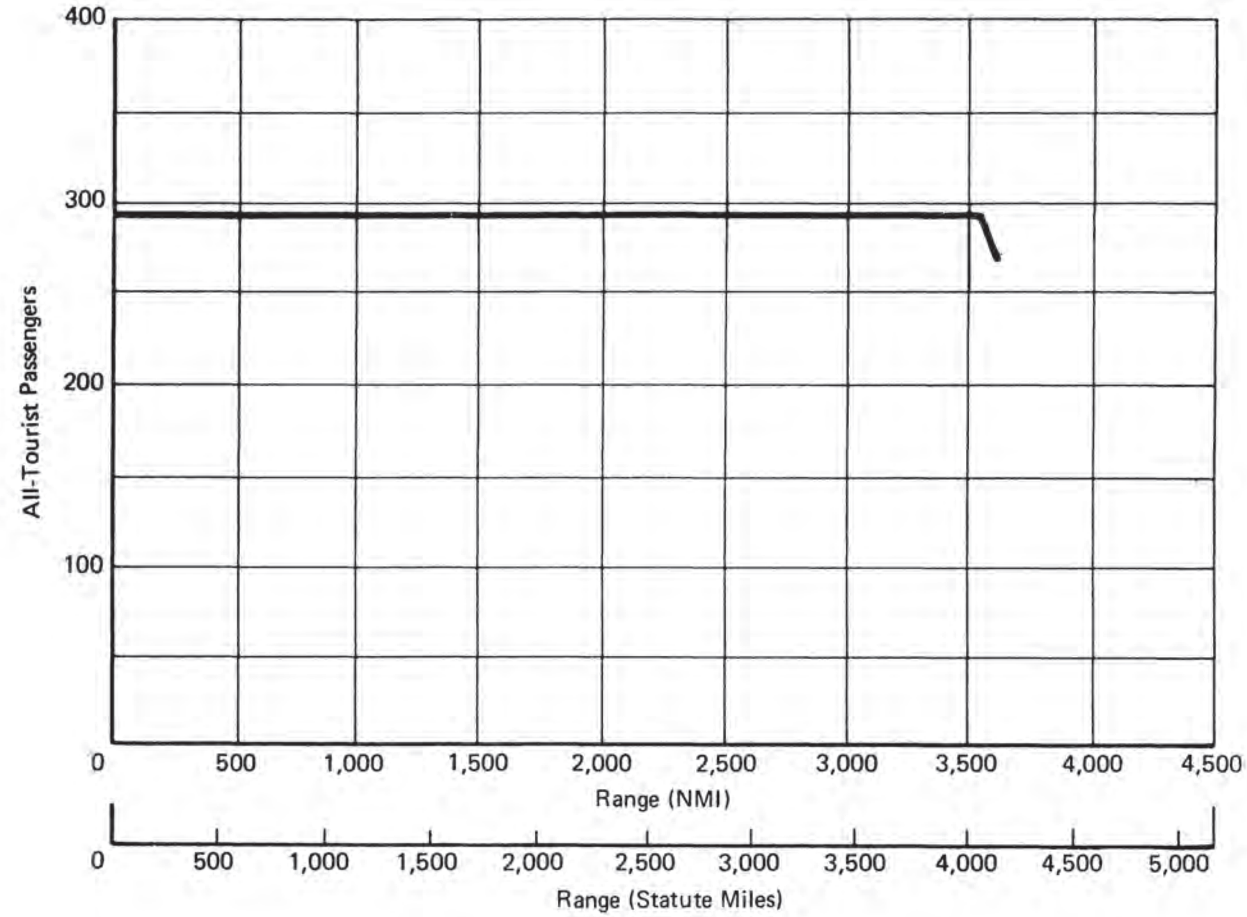

Figure 9-A. Payload Range Capabilities

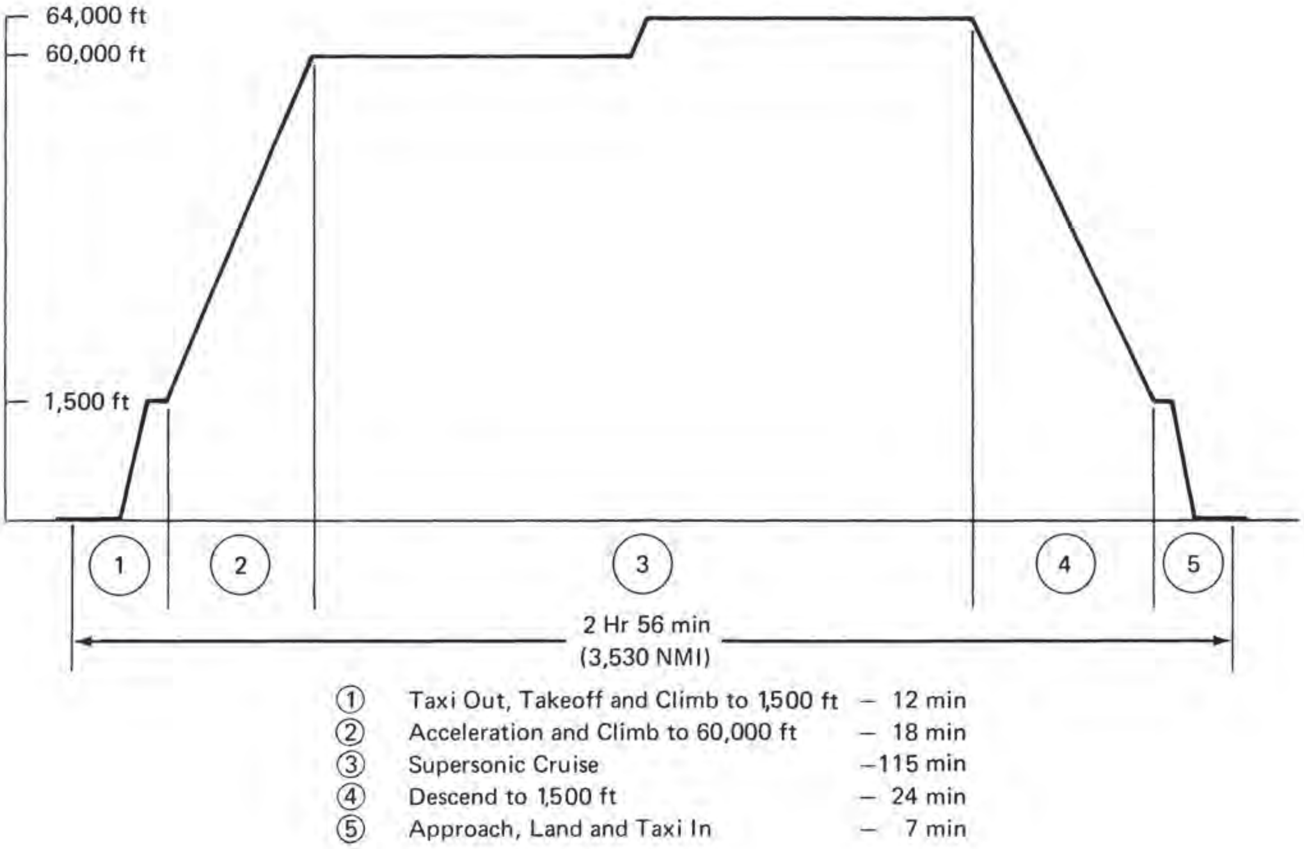

Figure 9-B. Flight Profile–Typical Mission–Standard Day

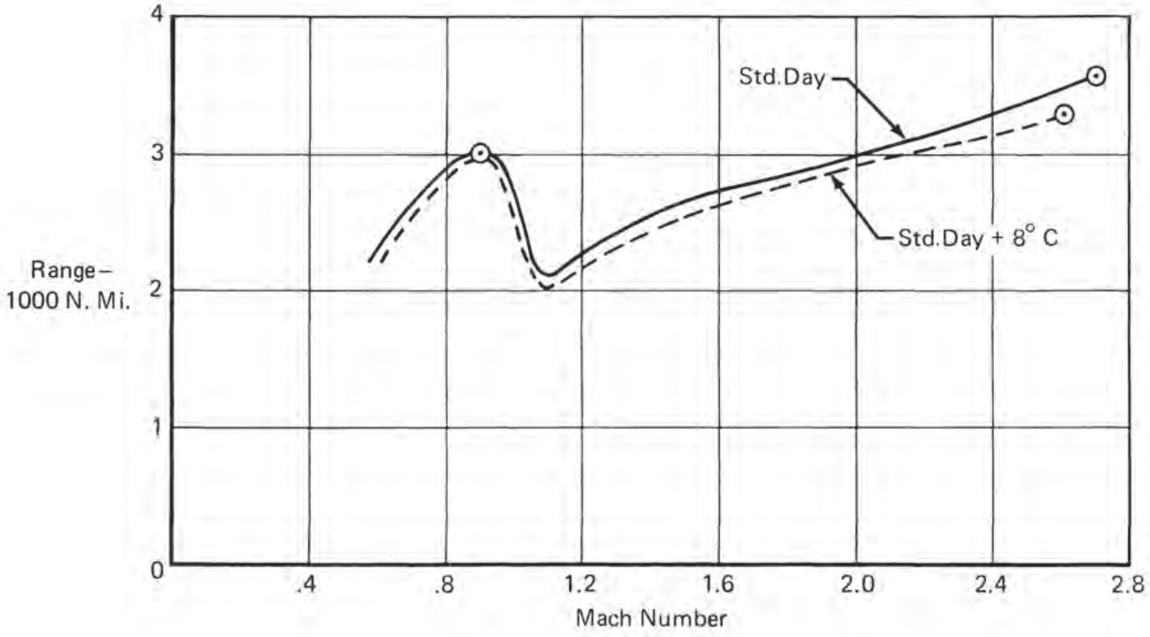

Figure 9-C. Speed vs Range

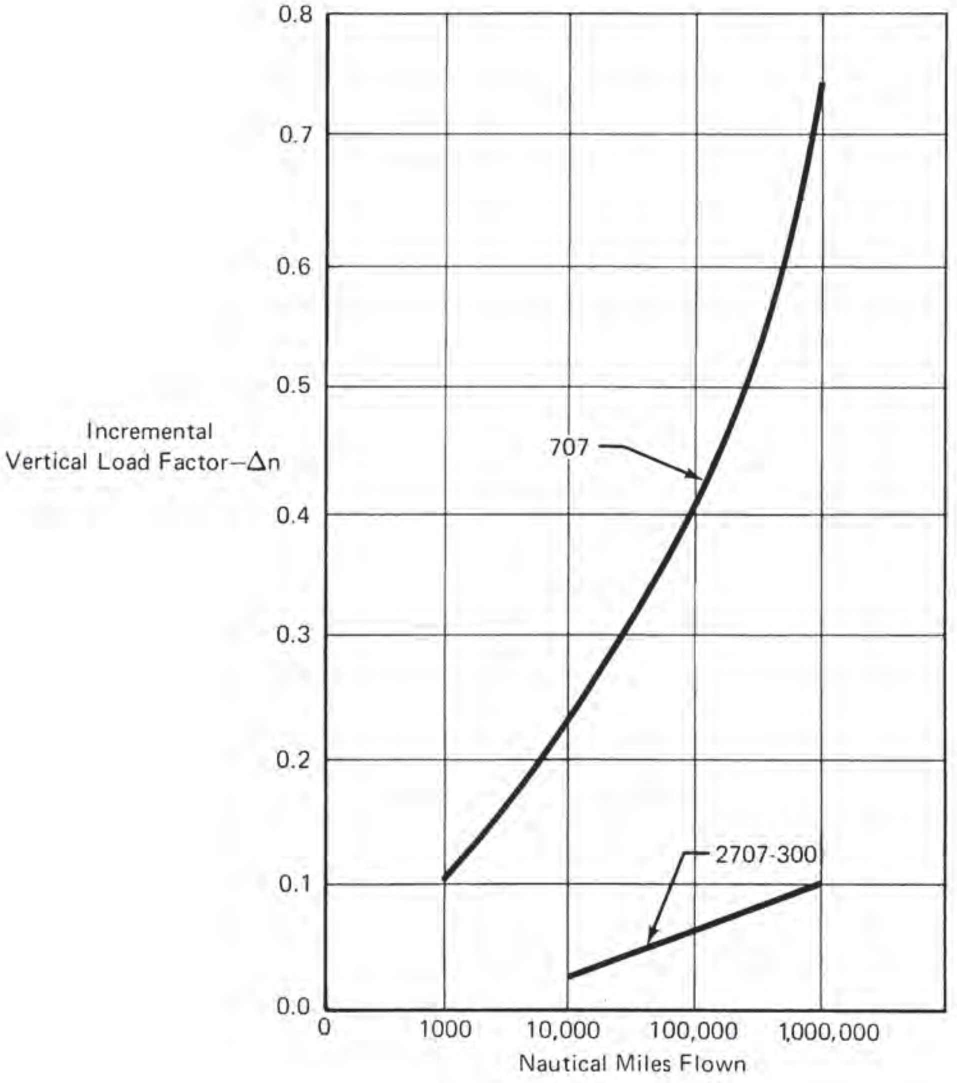

Figure 9-D. Ride Quality

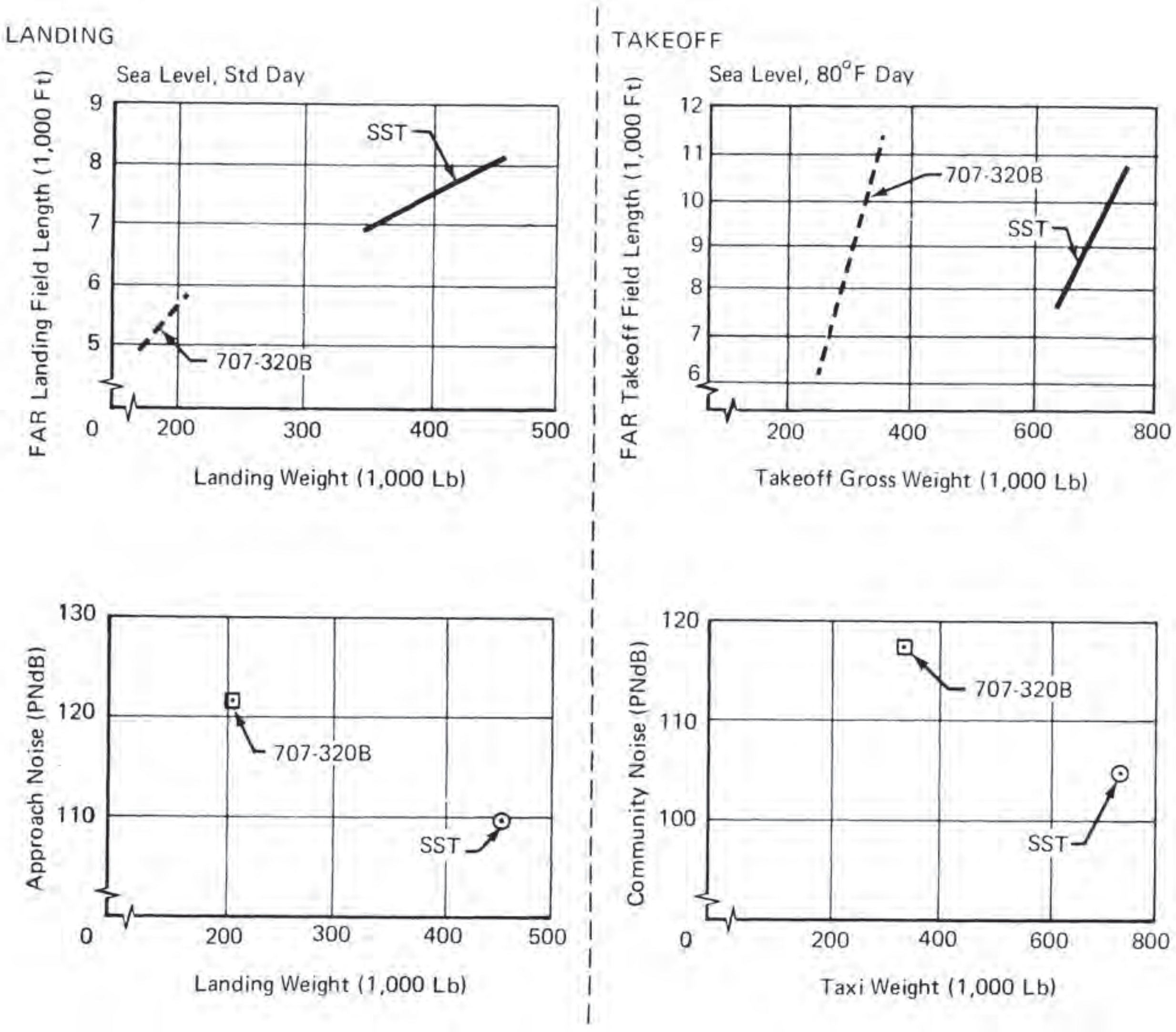

Figure 9-E. Landing/Takeoff Performance

TERMINAL CONSIDERATIONS

The impact of the 2707-300 on major airports will be minimal. The passenger loading system has been designed to use the same or equivalent facilities and ground equipment as those now under construction for the large subsonic jets (Figure 9-F). Runway length and strength requirements are compatible with current long range jet transports.

Because servicing and cargo loading doors are on the opposite side and under the passenger doors, servicing and baggage movement can be carried on concurrently—away from the passenger loading zones.

Size and weight characteristics of the 2707-300 are similar to those of the 747 so that maintenance hangar and other major structures such as engine test facilities may be used for both types of aircraft.

The short flight times of intercontinental travel by the 2707 will bring relief to airport congestion since new arrival and departure options will be available to minimize traffic peaking at certain times of the day.

Boeing has maintained a continuing liaison with the major airports of the world in keeping up to date with their requirements and planning, and in supplying them with design data on the airplane. Figures 9-F through 9-M are typical of the nature of the detailed information which is provided to the airports.

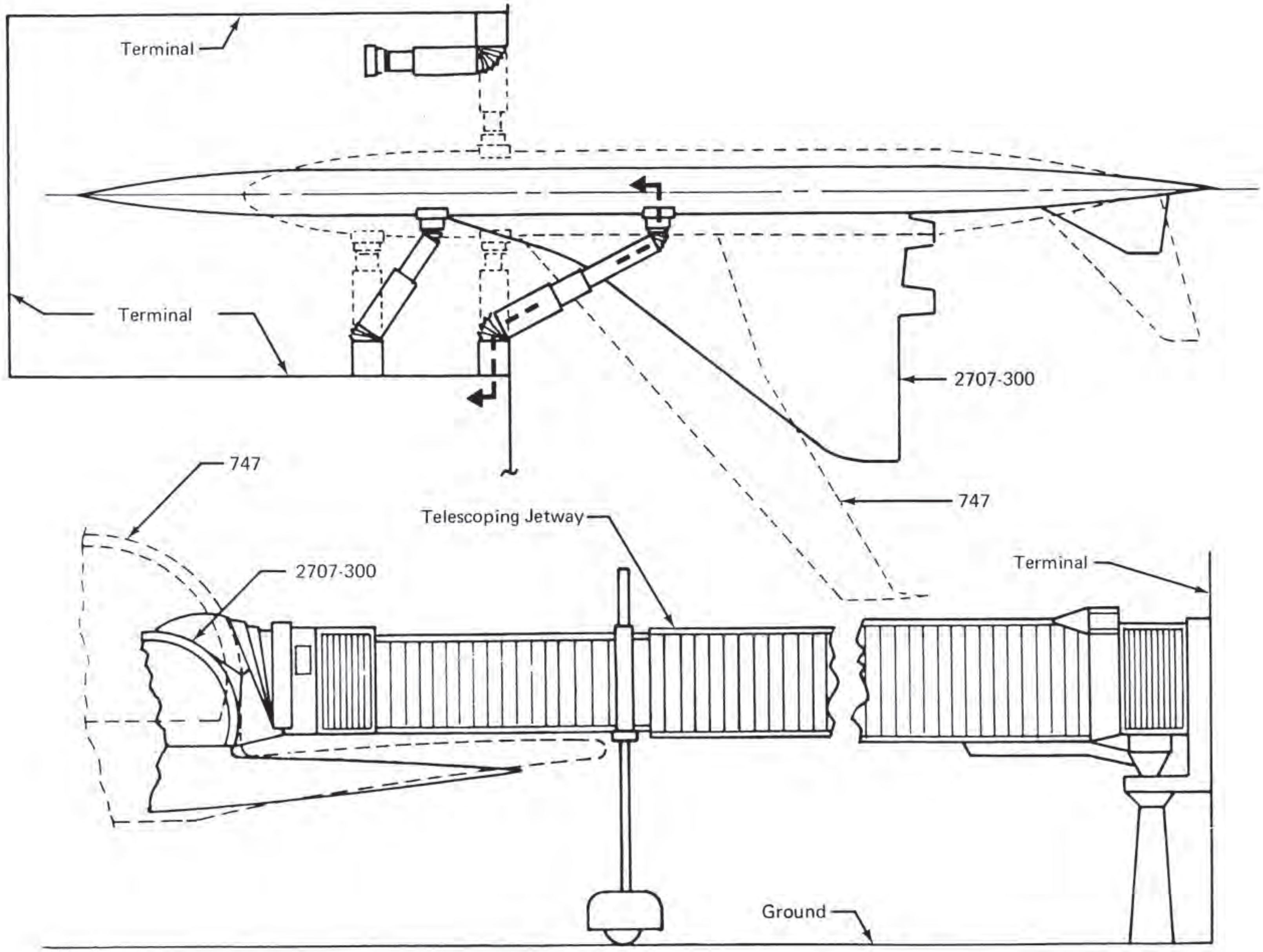

Figure 9-F. Passenger Loading

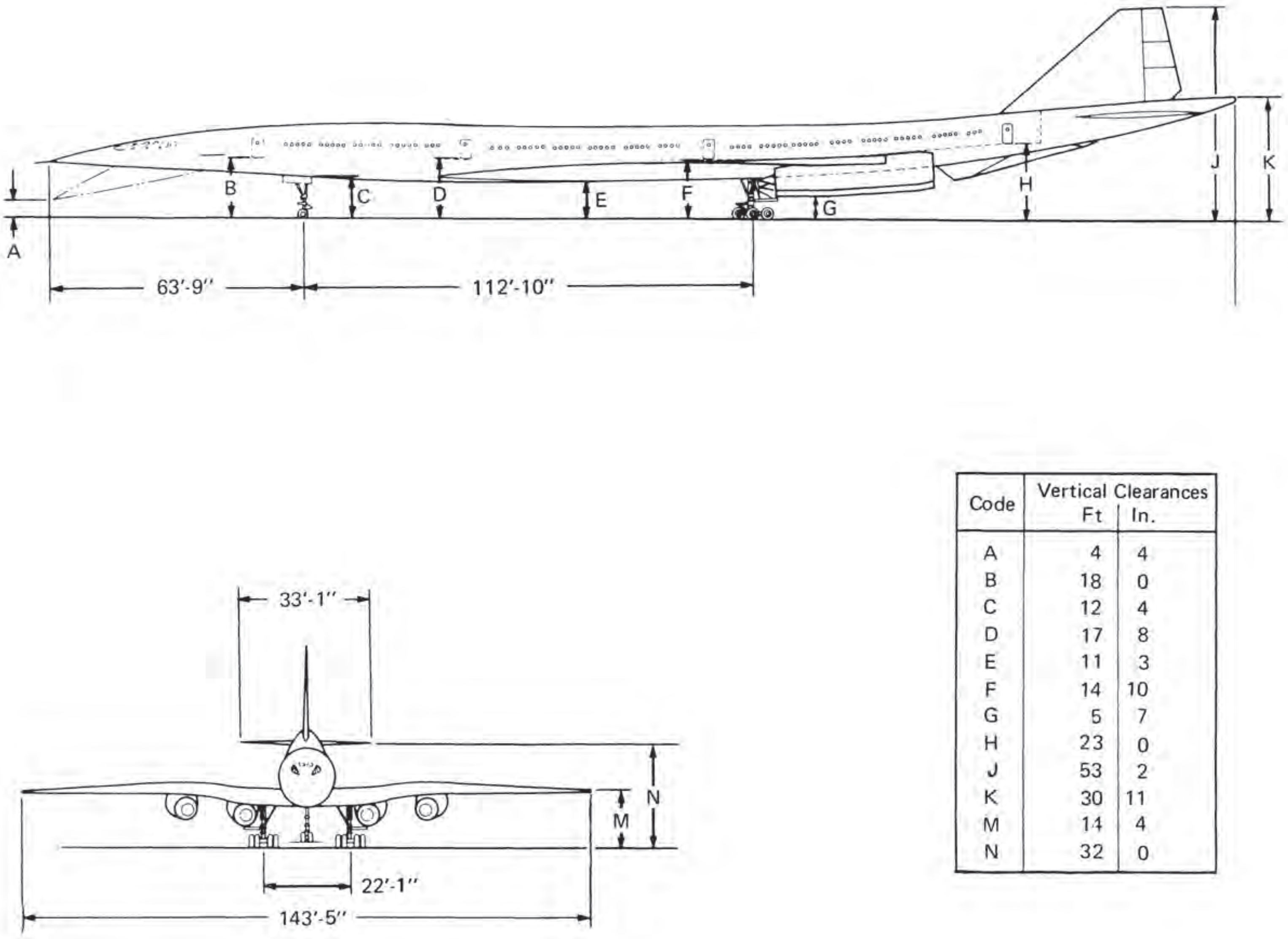

Code	Vertical Clearances Ft	In.
A	4	4
B	18	0
C	12	4
D	17	8
E	11	3
F	14	10
G	5	7
H	23	0
J	53	2
K	30	11
M	14	4
N	32	0

Figure 9-G. Vertical Clearances

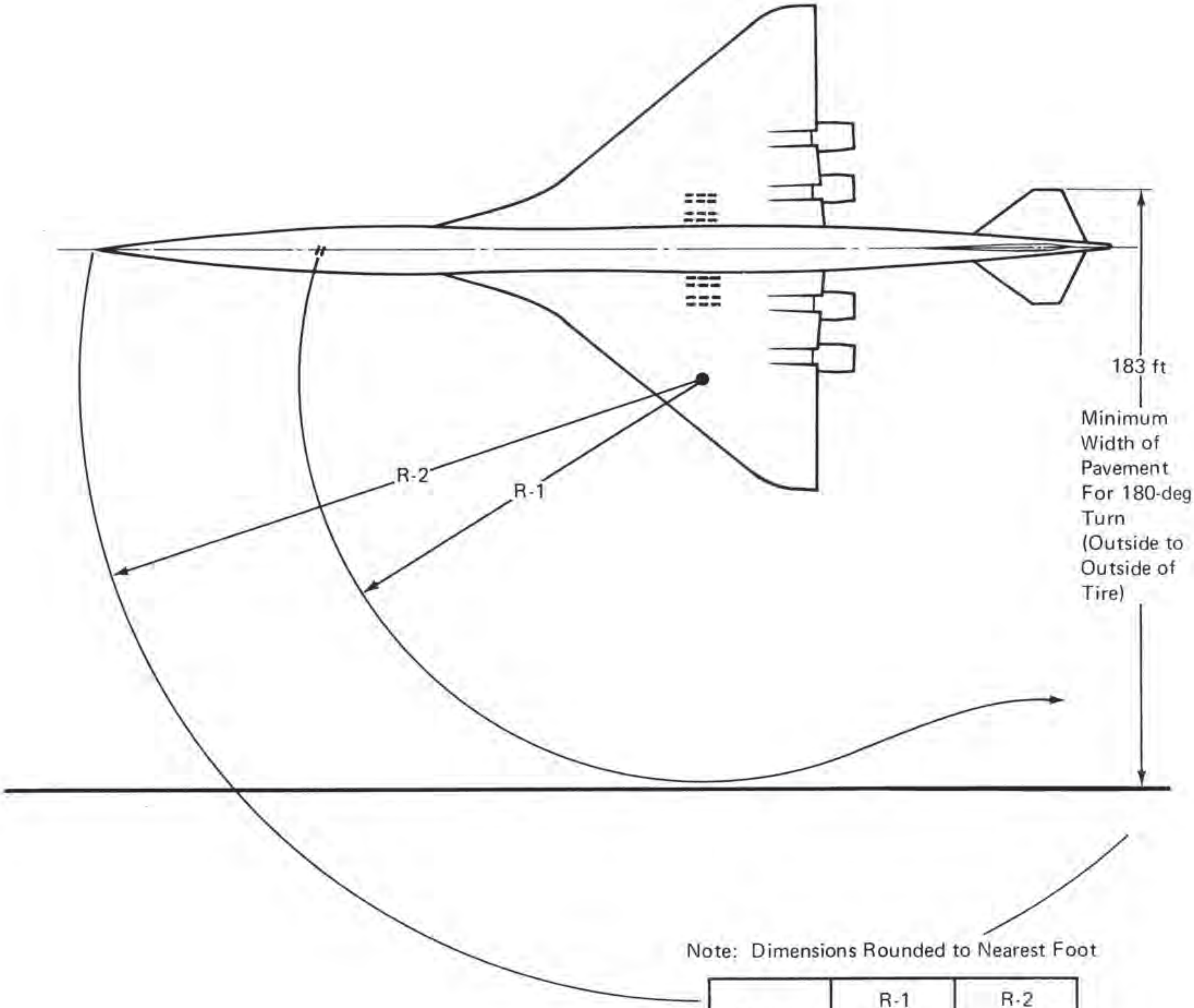

Note: Dimensions Rounded to Nearest Foot

Steering Angle (Deg)	R-1	R-2
	Nose Gear (Ft)	Nose (Ft)
30	226	263
71.5(Max)	121	182

Figure 9-H. Ground Maneuvering – Turn Radii

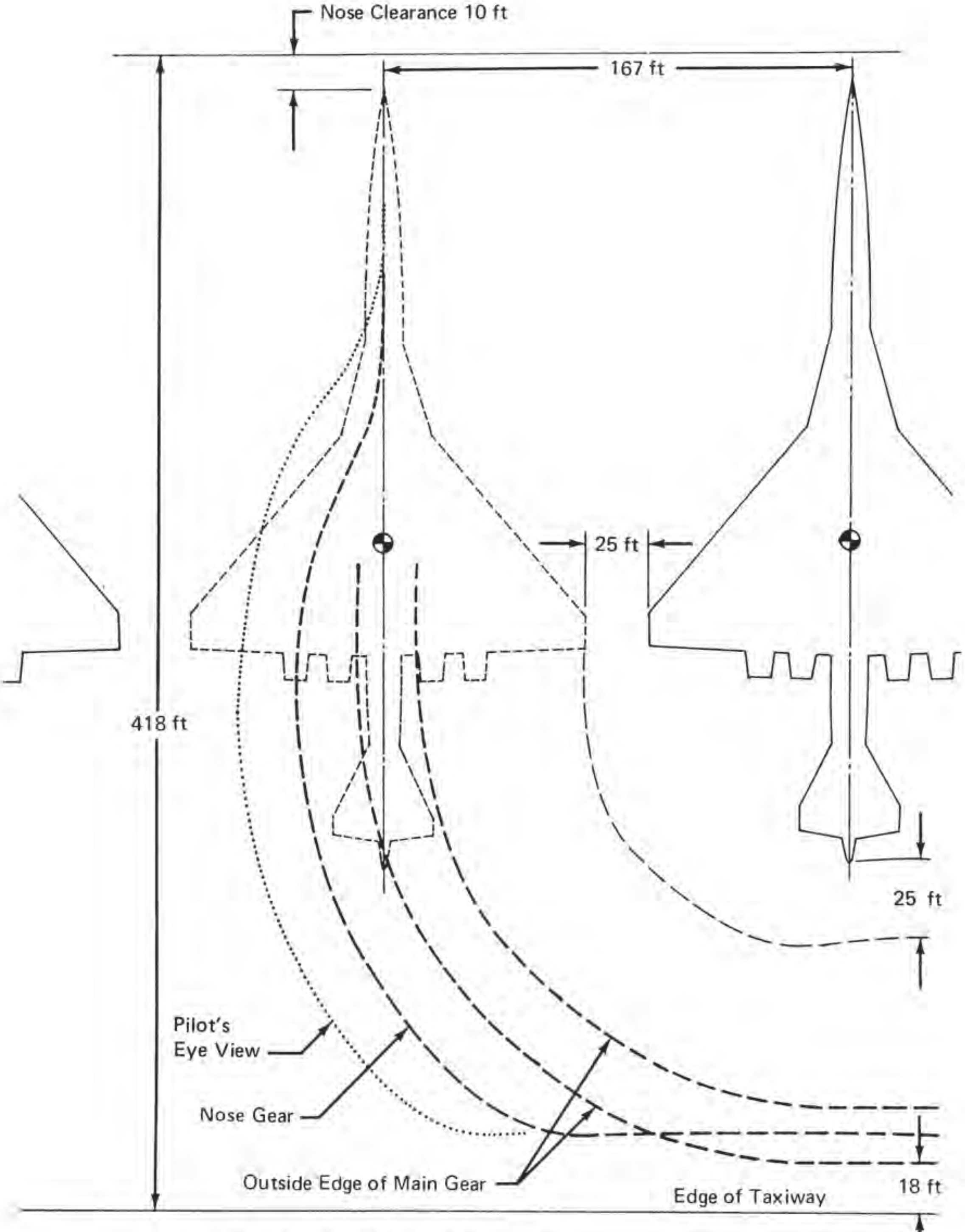

Notes: Taxi Speed = 10 ft/sec (6.8 mph) max
Nose Gear Steering Angle = 50 deg max

Figure 9-1. Minimum Parking Space Requirements

Notes: Taxi Speed = 30 ft/sec (6.8 mph) max
Nose Gear Steering Angle = 50 deg max

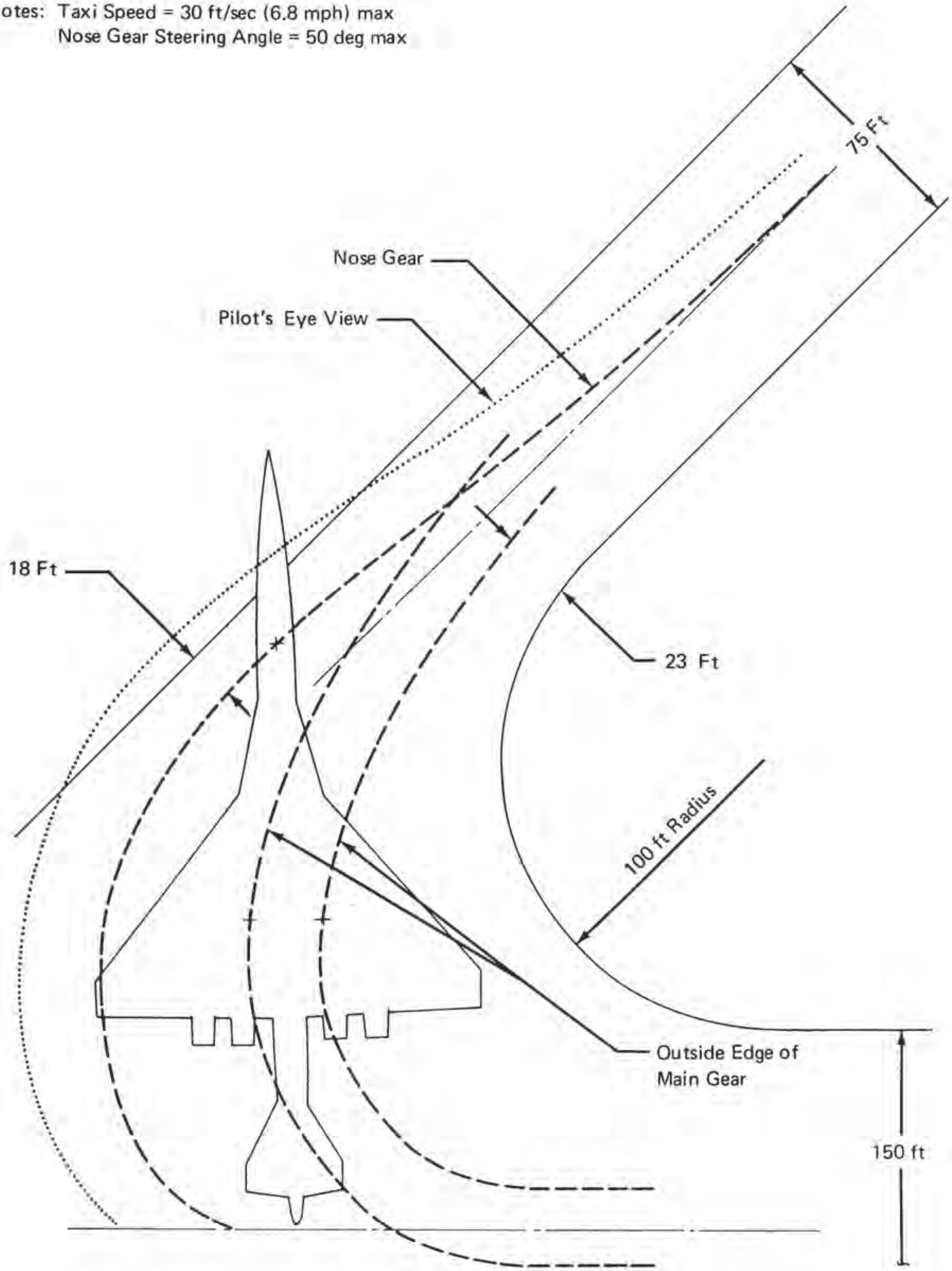

Figure 9-J. Runway-To-Taxiway Turn

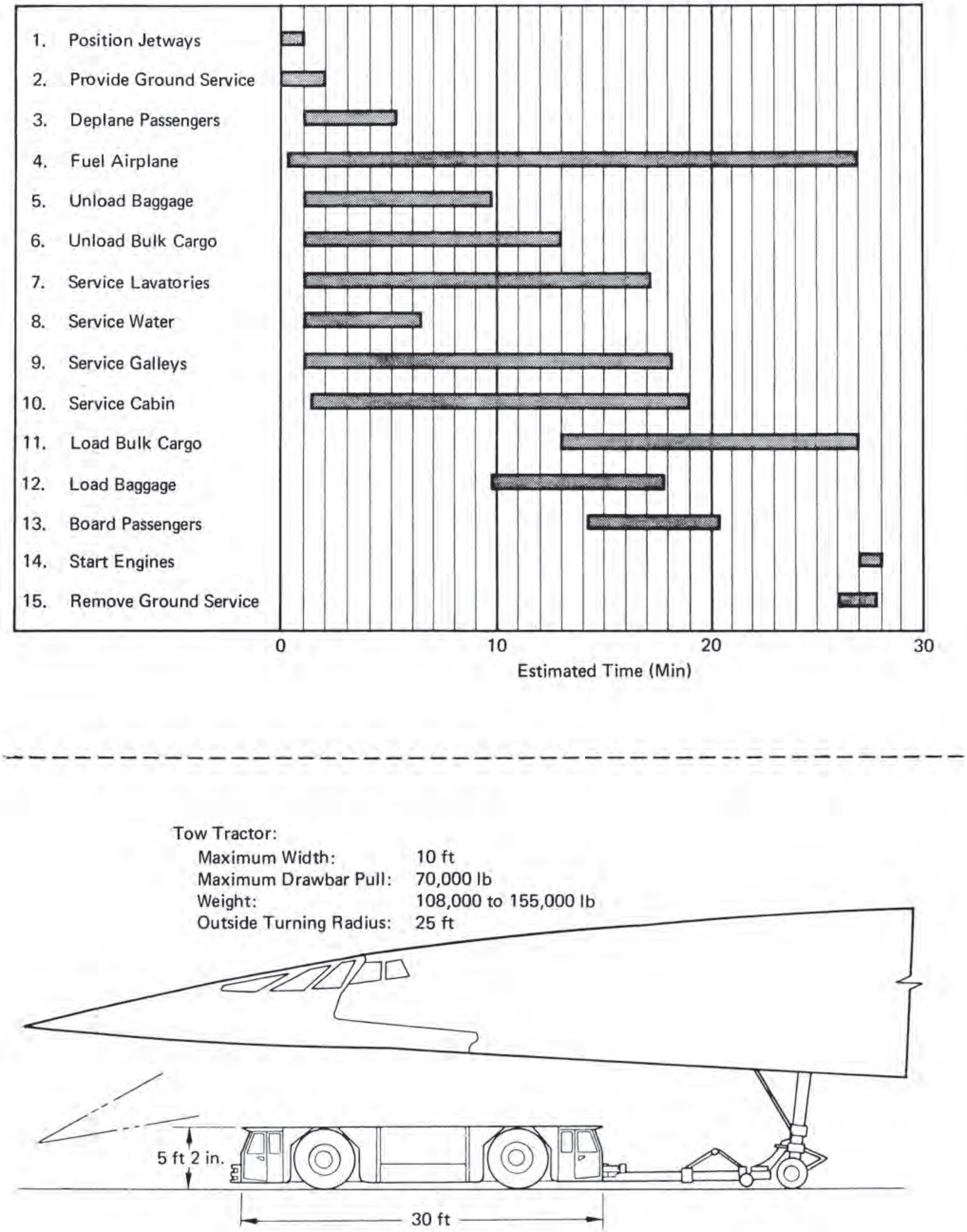

Figure 9-K. Terminal Operations and Ground Towing

Nomenclature: V_{NG} = Maximum Vertical Nose-Gear Ground Load at Most Forward CG

V_{MG} = Maximum Vertical Main Gear Ground Load at Most Aft CG

H = Maximum Horizontal Ground Load From Braking

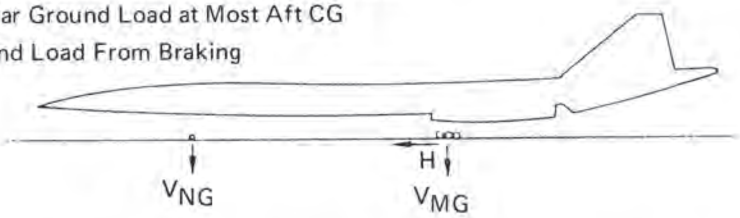

MODEL	MAXIMUM GROSS WEIGHT	V_{NG}		V_{MG} (PER STRUT)	H (PER STRUT)	
		STATIC AT MOST FORWARD CG	STATIC + BRAKING (COEFF OF FRICTION 0.2)	MAXIMUM LOAD OCCURING AT STATIC AFT CG	AT STEADY BRAKING (COEFF OF FRICTION 0.2)	AT INSTANTANEOUS BRAKING (COEFF OF FRICTION 0.8)
2707 -300	750,000 LB	57,000 LB	74,000 LB	353,000 LB	69,000 LB	256,000 LB

Note:
All Loads Calculated Using Airplane Max Gross Weight.

Maximum Pavement Loads

Maximum Ramp Weight:	750,000 lb
Percent of Weight on Main Gear:	95
Nose-Gear Tire Size:	34 x 16 in.
Nose-Gear Tire Pressure:	217 psi
Main-Gear Tire Size:	40 x 14
Main-Gear Tire Pressure:	220 psi

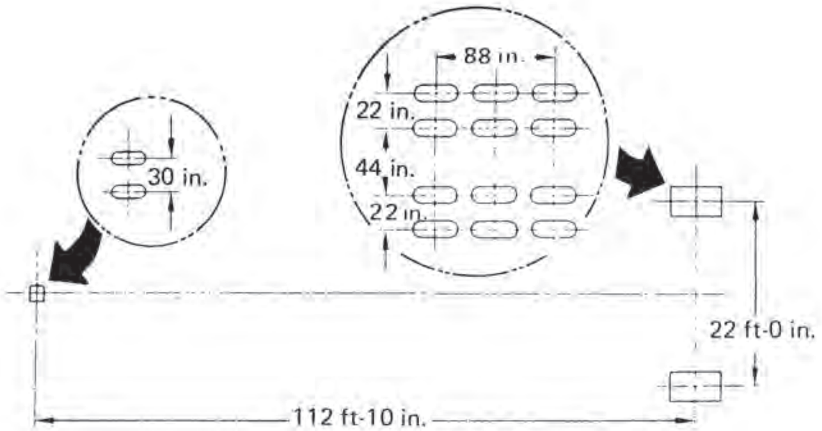

Landing-Gear Footprint

Figure 9-L. Pavement Loading

Model	Gross Weight (1000 lb)	Tire Spacing	Tire Size	Tire Pres	*Pavement Thickness	
					Rigid (f = 400, K = 300)	Flexible FAA F4,
2707-300	750	22 x 44 x 44	40 x 14	220	12.9	27.8
	700				12.0	26.3
	650				11.1	24.6
	600				10.2	22.8
707-320	336	34.6 x 56	46 x 16	180	12.2	27.0
	328				12.0	26.5
	316				11.6	26.0
707-120B	258	34 x 56	46 x 16	170	10.3	23.5
747	713	44 x 58	46 x 16	204	12.2	27.0
DC-8-63	353	31.25 x 55	44 x 16	198	13.2	26.2
DC-8-55	328	30 x 55	44 x 16	187	13.0	25.3
Concorde	376	26.4 x 65.7	47 x 15.75	184	13.4	28.7

*Maximum Possible Main Gear Load at Maximum Ramp Weight and Aft Center of Gravity

Figure 9-M. Comparative Flotation Data

SIZING VERSATILITY

Aircraft range and payload requirements vary from airline to airline due to individual route and traffic conditions. The basic design of the 2707-300 airplane is such that accommodation of these varying requirements can be made through changes in the body length and width, while retaining commonality of most of the remaining components (Figure 10-A). The separate horizontal tail surface provides aerodynamic balance tolerance for body length changes without performance penalty. Manufacturing feasibility is made possible by placement of the body over the wing structure which carries through from side to side. A central insert in the wing structure which matches the selected body is provided to adjust for body width differences.

Figure 10-B illustrates the variation in payload/range performance attendant to such changes in body size. By maintaining the same operational weights for all versions, the only appreciable performance change is in payload/range resulting from different body drag and fuel capacity characteristics. Takeoff, landing and general handling performance remain essentially the same. For purposes of defining the 2707-300 airplane within the preceding sections of this document, the 298 passenger six abreast body version has been used. The prototype airplane sizing is comparable to the 253 passenger five abreast version.

Seating arrangements for the candidate versions are depicted on Figures 10-C and 10-D. Further route and traffic analyses together with airline coordination are required before commitment is made as to the number of variations and specific sizing of the production aircraft to be manufactured.

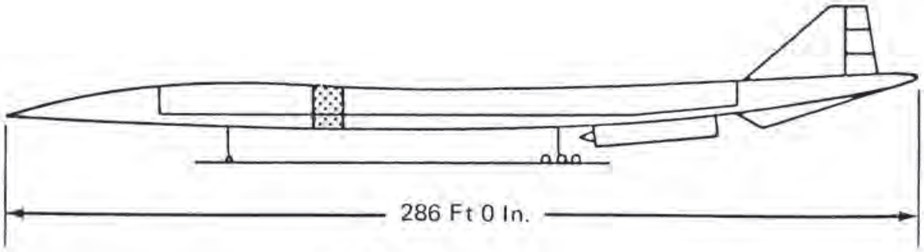

253 Passengers, 5 Abreast

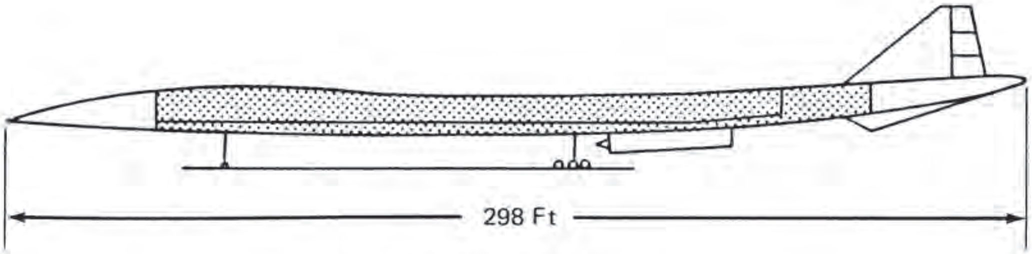

298 Passengers, 6 Abreast

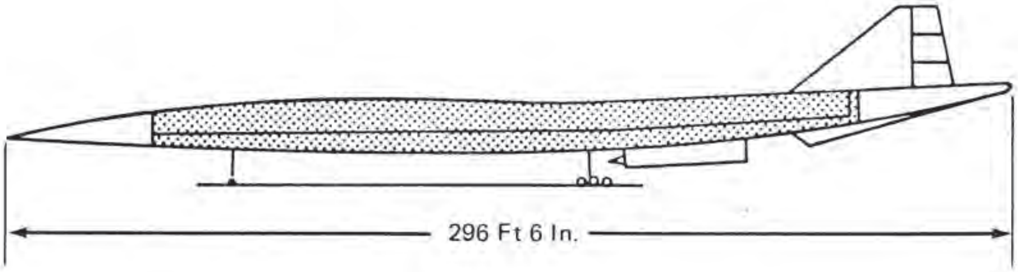

321 Passengers, 7 Abreast

▨ New Body Sections

Figure 10-A. Production Airplanes

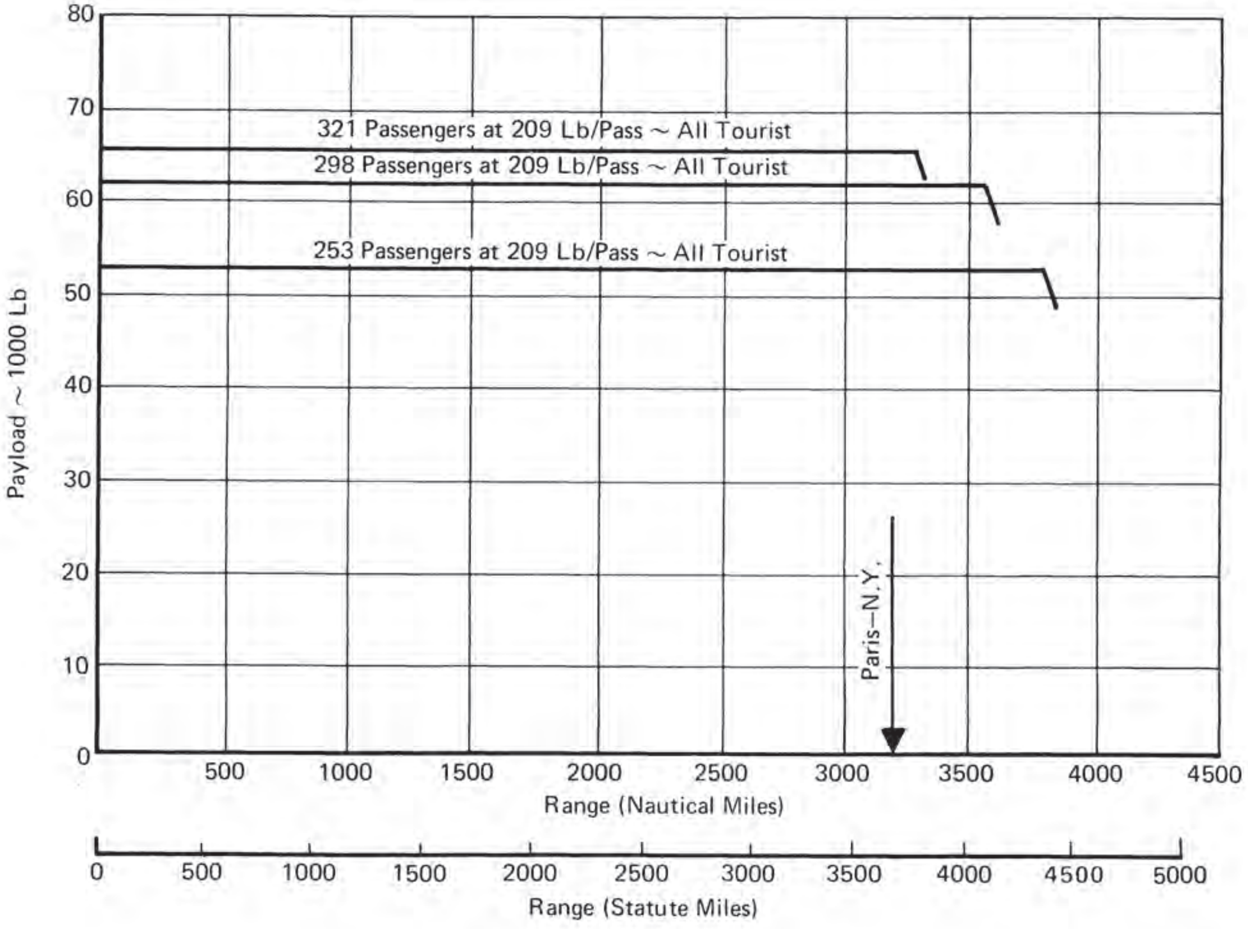

Figure 10-B. Payload-Range Capabilities

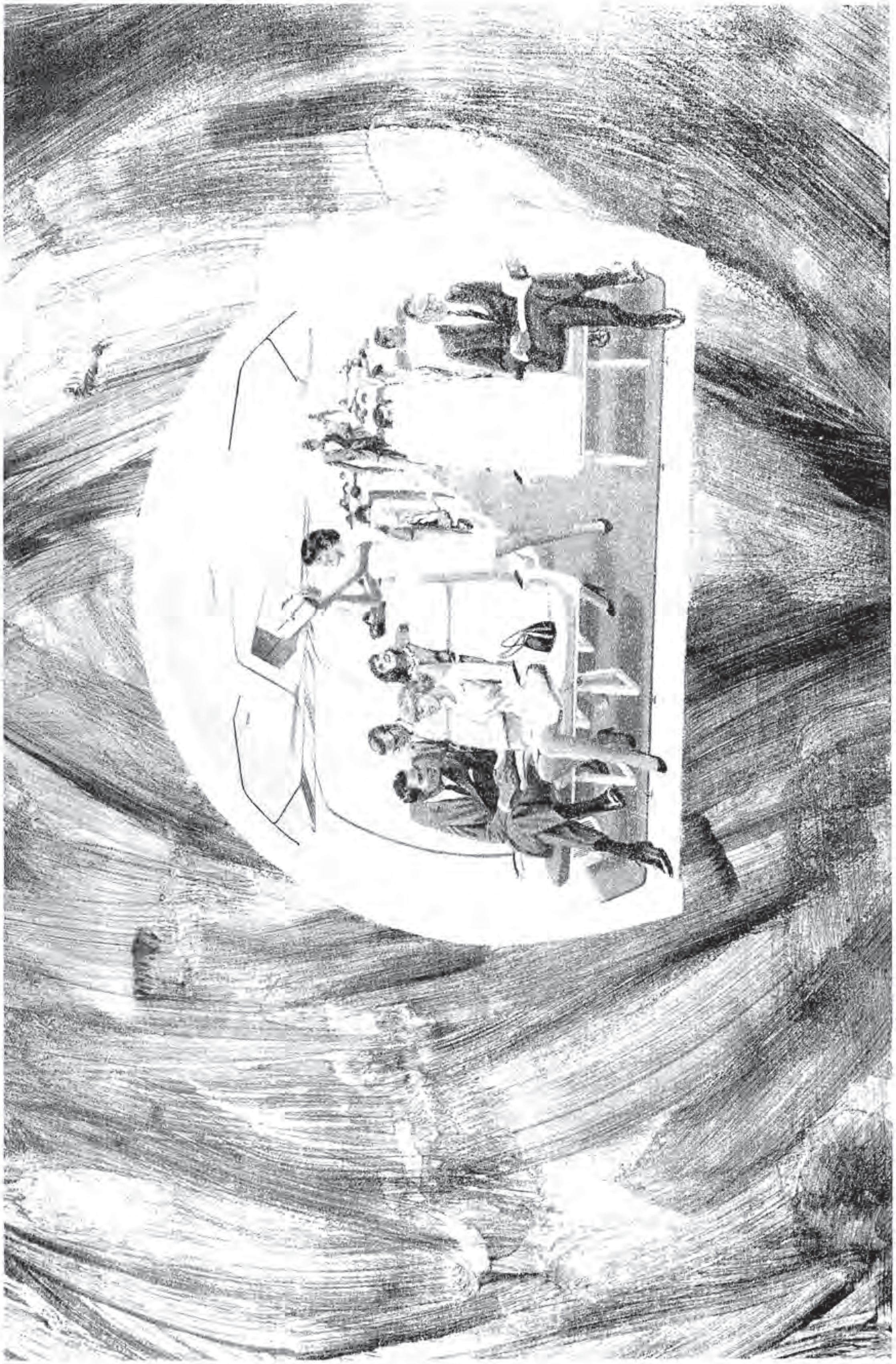

Figure 10-C. 5 Abreast Seating Configuration

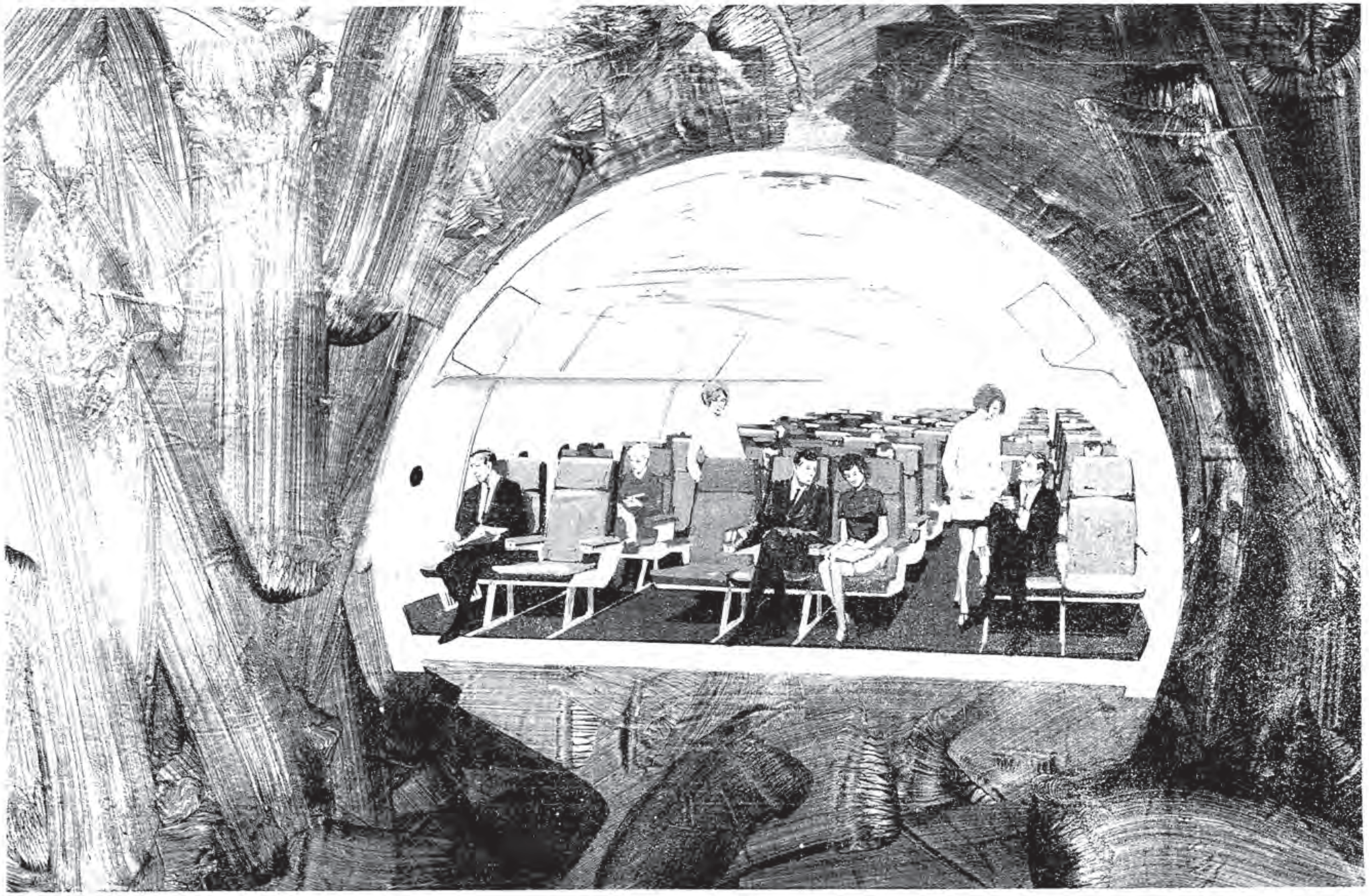

Figure 10-D. 7 Abreast Seating Configuration

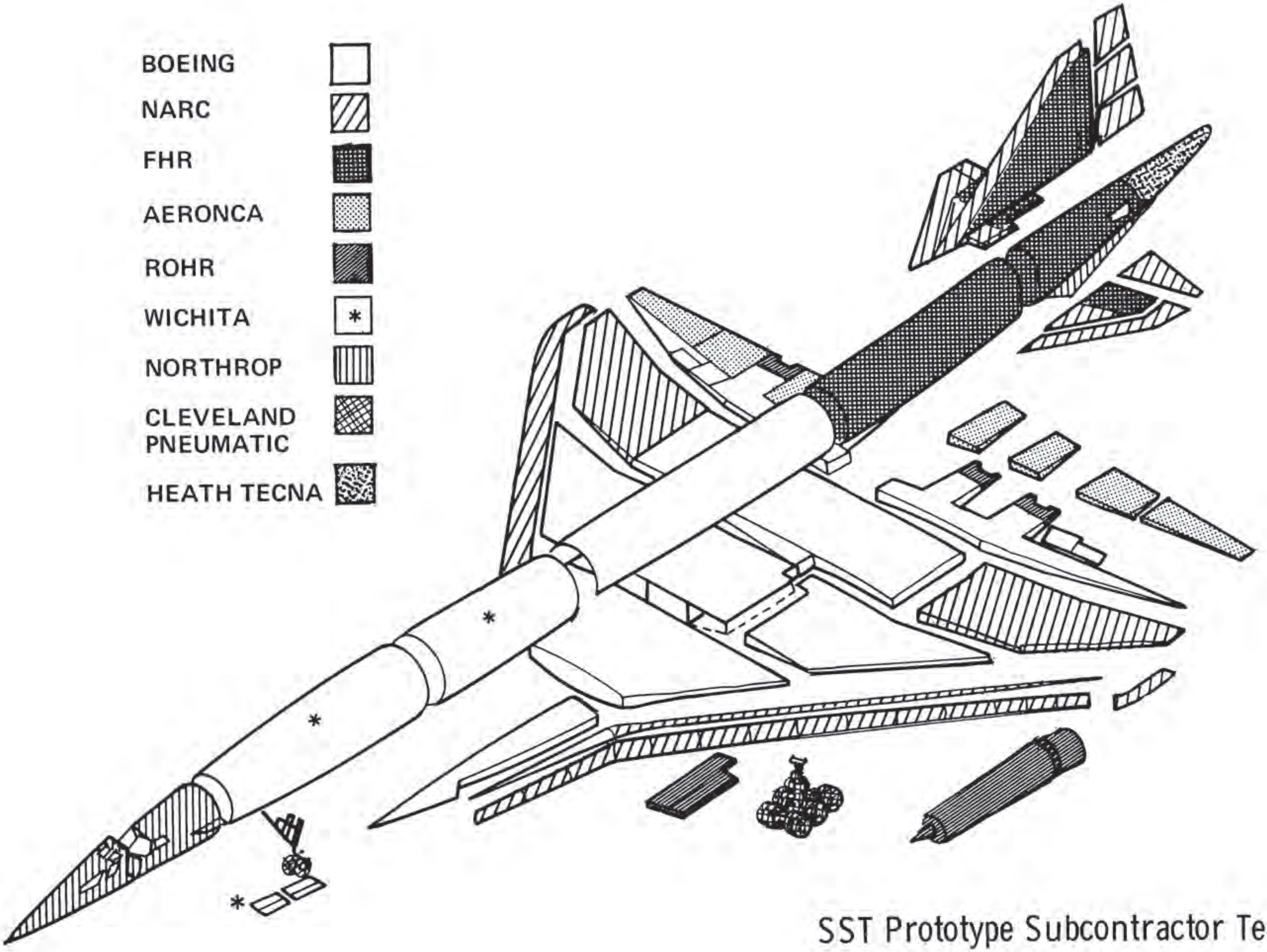

SST Prototype Subcontractor Team

P41072

ANATOMY OF THE BOEING SST

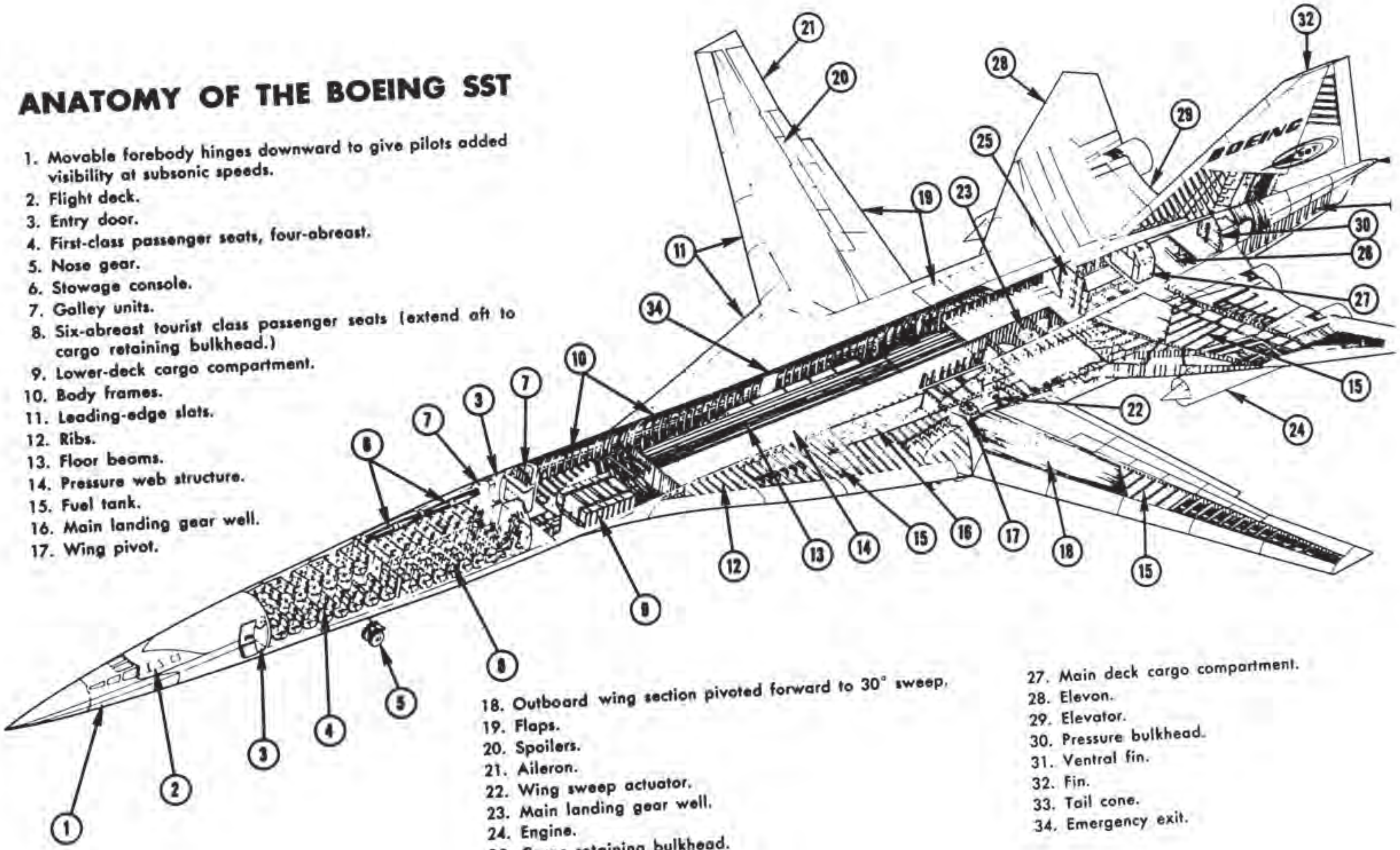

1. Movable forebody hinges downward to give pilots added visibility at subsonic speeds.
2. Flight deck.
3. Entry door.
4. First-class passenger seats, four-abreast.
5. Nose gear.
6. Stowage console.
7. Galley units.
8. Six-abreast tourist class passenger seats (extend aft to cargo retaining bulkhead.)
9. Lower-deck cargo compartment.
10. Body frames.
11. Leading-edge slats.
12. Ribs.
13. Floor beams.
14. Pressure web structure.
15. Fuel tank.
16. Main landing gear well.
17. Wing pivot.
18. Outboard wing section pivoted forward to 30° sweep.
19. Flaps.
20. Spoilers.
21. Aileron.
22. Wing sweep actuator.
23. Main landing gear well.
24. Engine.
25. Cargo retaining bulkhead.
26. Cargo door.
27. Main deck cargo compartment.
28. Elevon.
29. Elevator.
30. Pressure bulkhead.
31. Ventral fin.
32. Fin.
33. Tail cone.
34. Emergency exit.

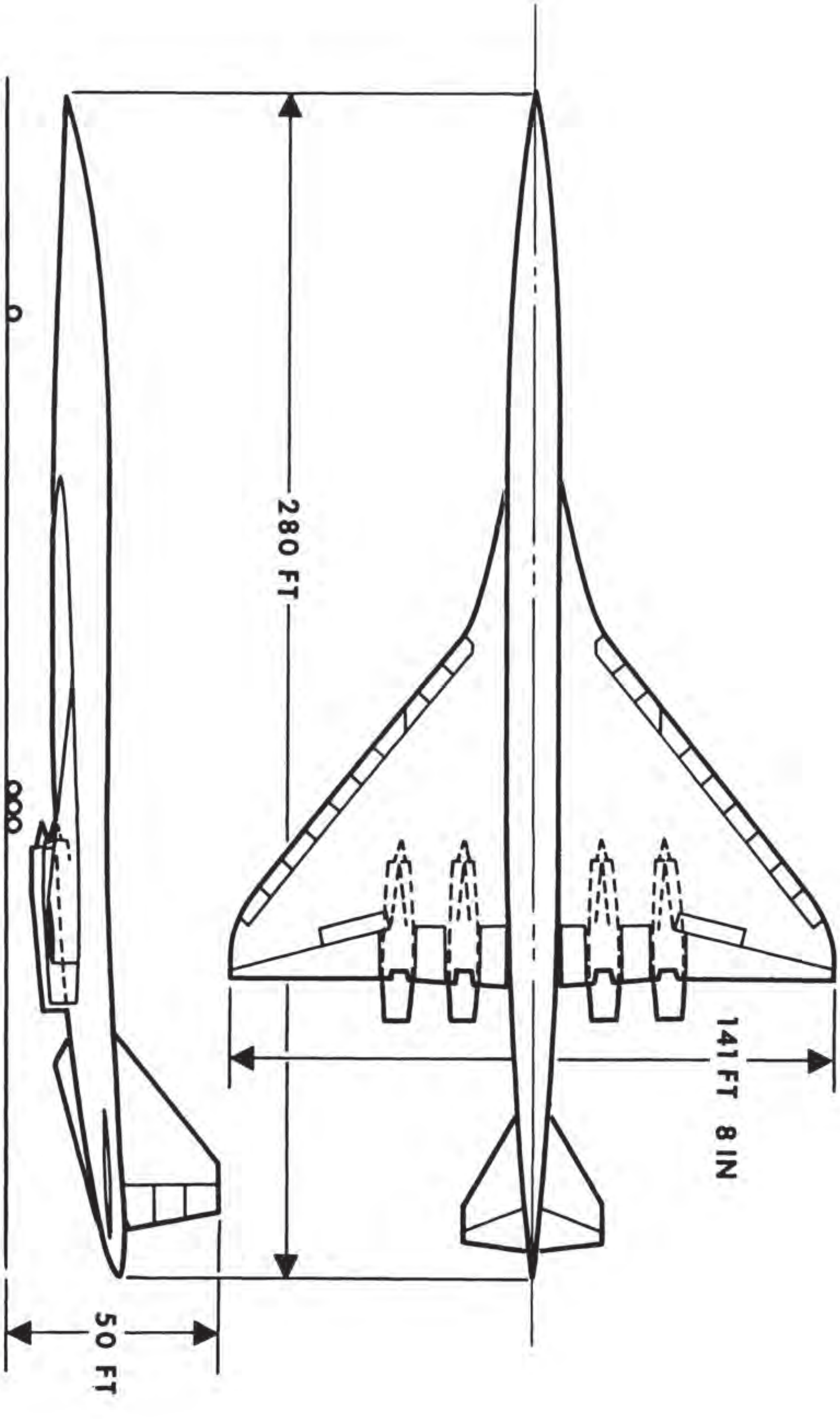
280 FT
141 FT 8 IN
50 FT

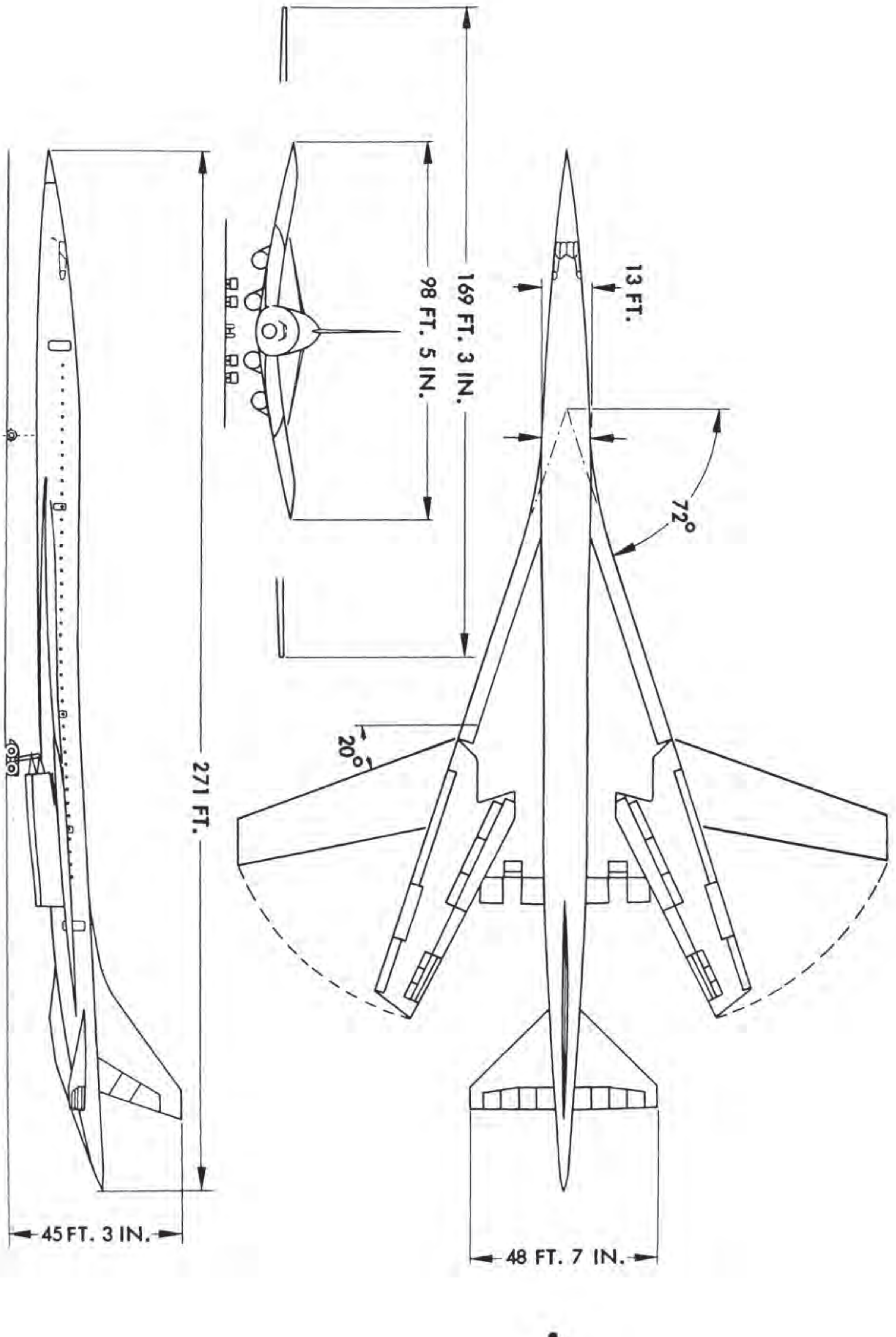
169 FT. 3 IN.
98 FT. 5 IN.
13 FT.
72°
20°
271 FT.
45 FT. 3 IN.
48 FT. 7 IN.

BOEING

SST

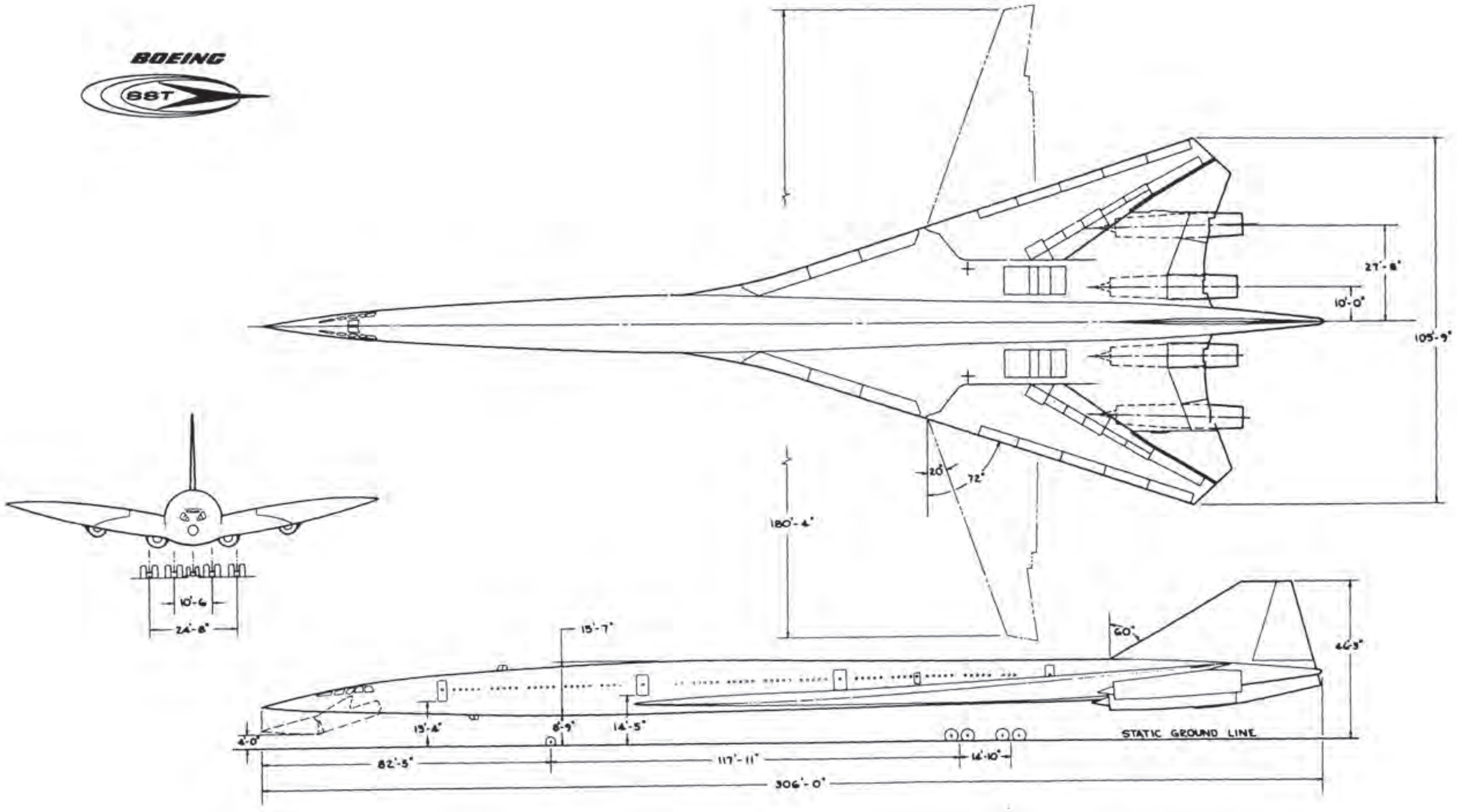
27'-8"
10'-0"
105'-9"
20°
72°
180'-4"
10'-6
24'-8"
15'-7"
60°
46'-3"
13'-4"
6'-9"
14'-5"
STATIC GROUND LINE
4'-0"
82'-5"
117'-11"
14'-10"
306'-0"

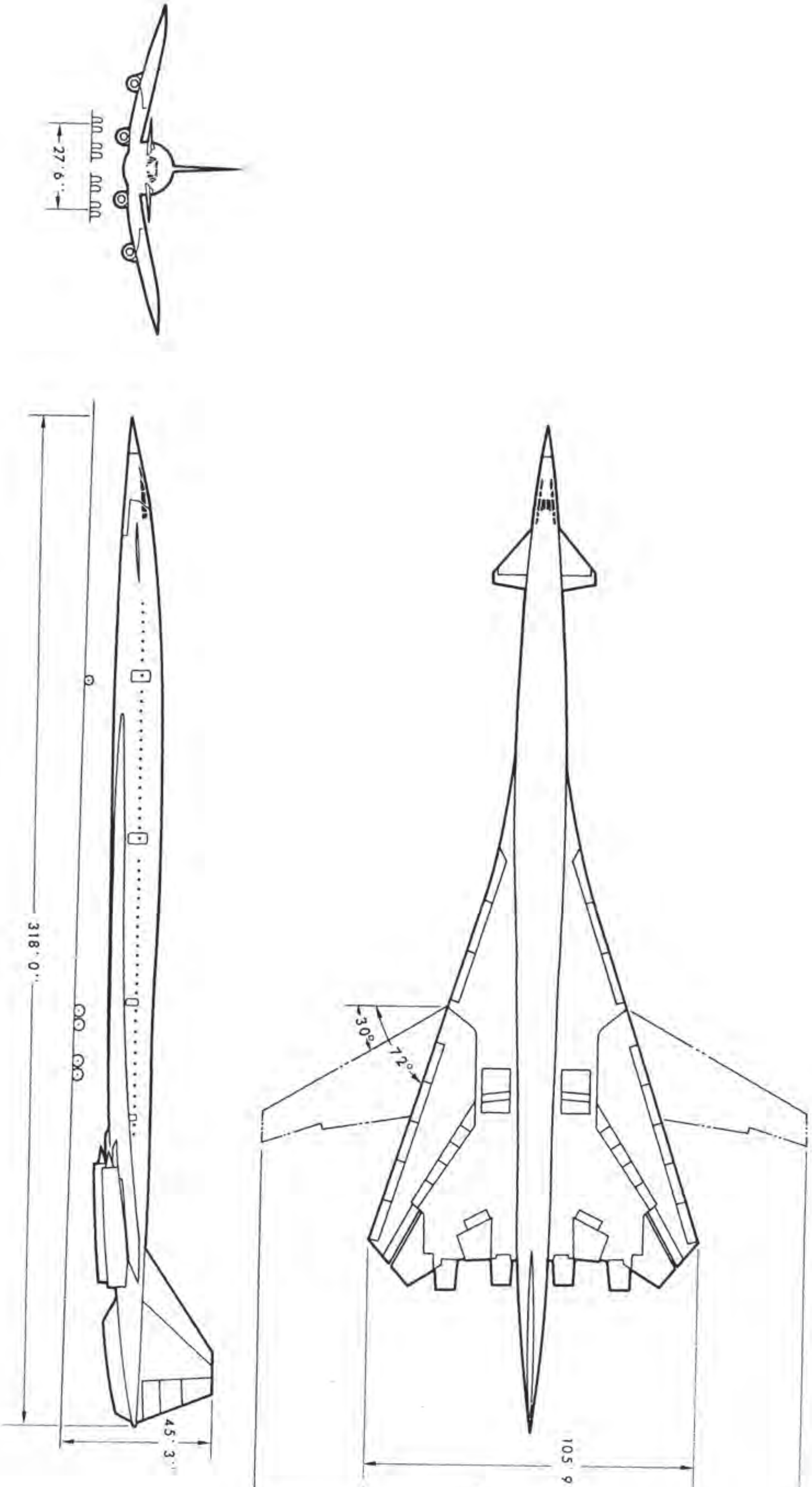
27'6"
318'0"
45'3"
30°
72°
105'9"
174'2"

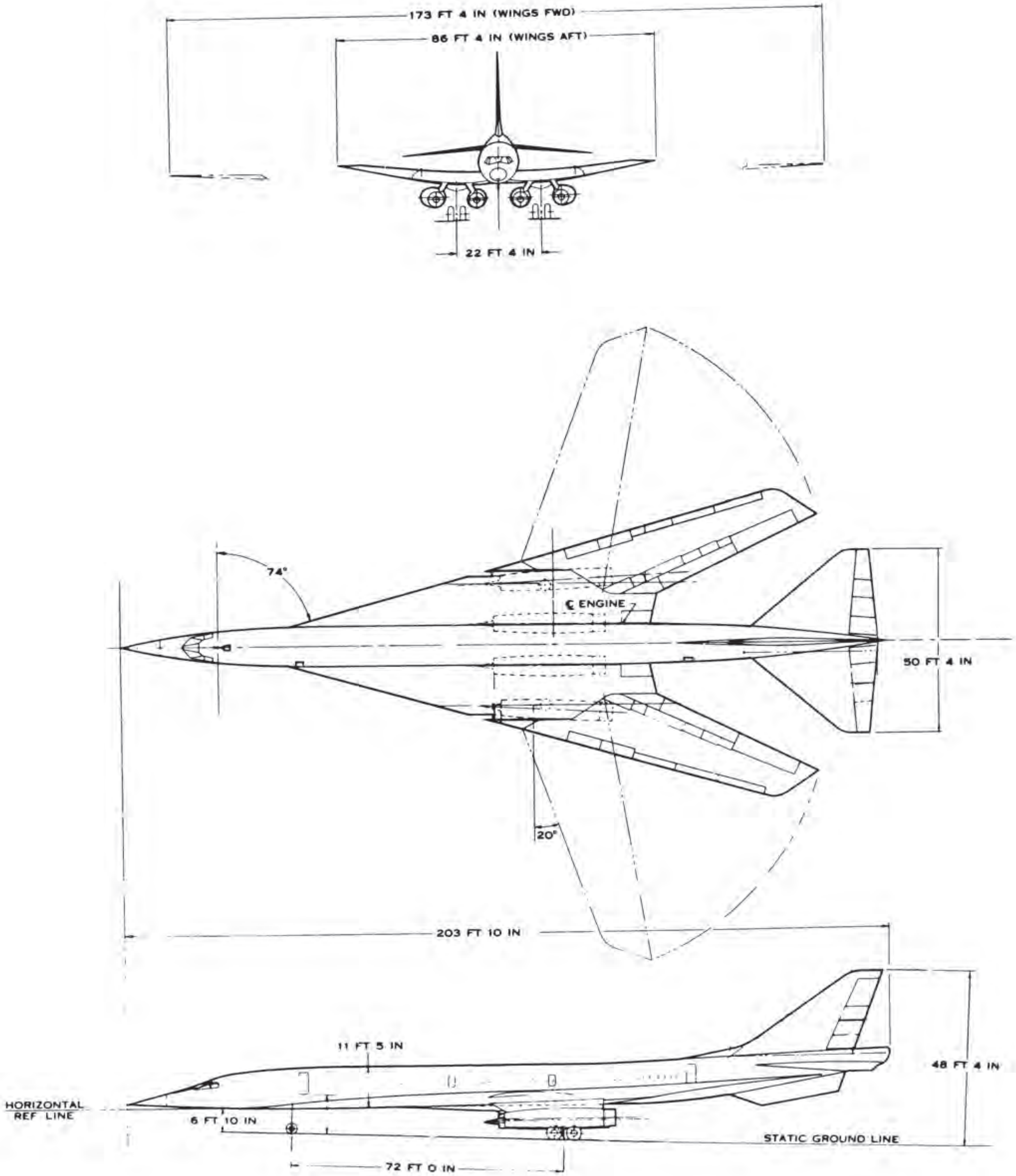
173 FT 4 IN (WINGS FWD)
86 FT 4 IN (WINGS AFT)
22 FT 4 IN
74°
℄ ENGINE
50 FT 4 IN
20°
203 FT 10 IN
11 FT 5 IN
HORIZONTAL REF LINE
6 FT 10 IN
72 FT 0 IN
STATIC GROUND LINE
48 FT 4 IN

733-197

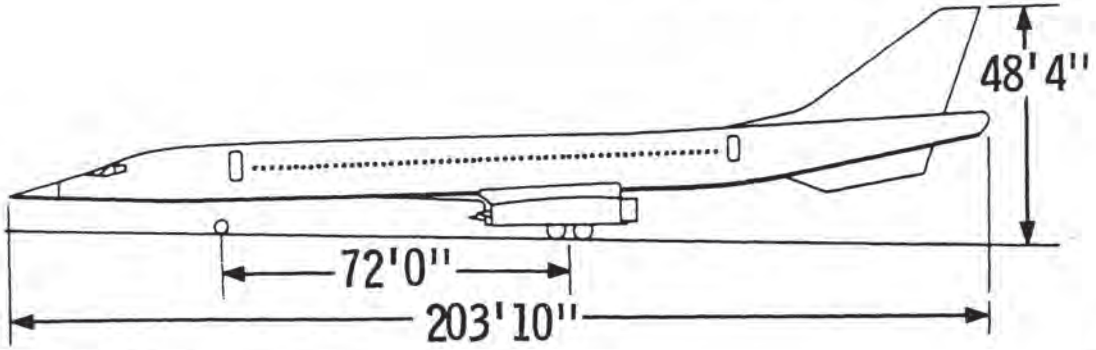

MAX. RAMP
WEIGHT ________ 430,000 LBS

OPERATOR'S
WEIGHT EMPTY__182,500 LBS

FUEL
CAPACITY______235,840 LBS (35,200 GAL.)

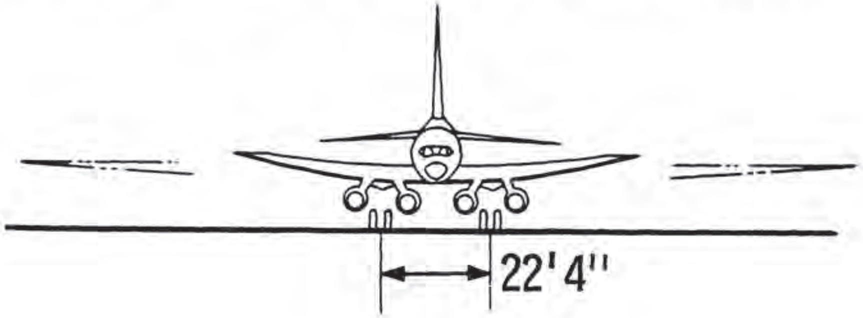

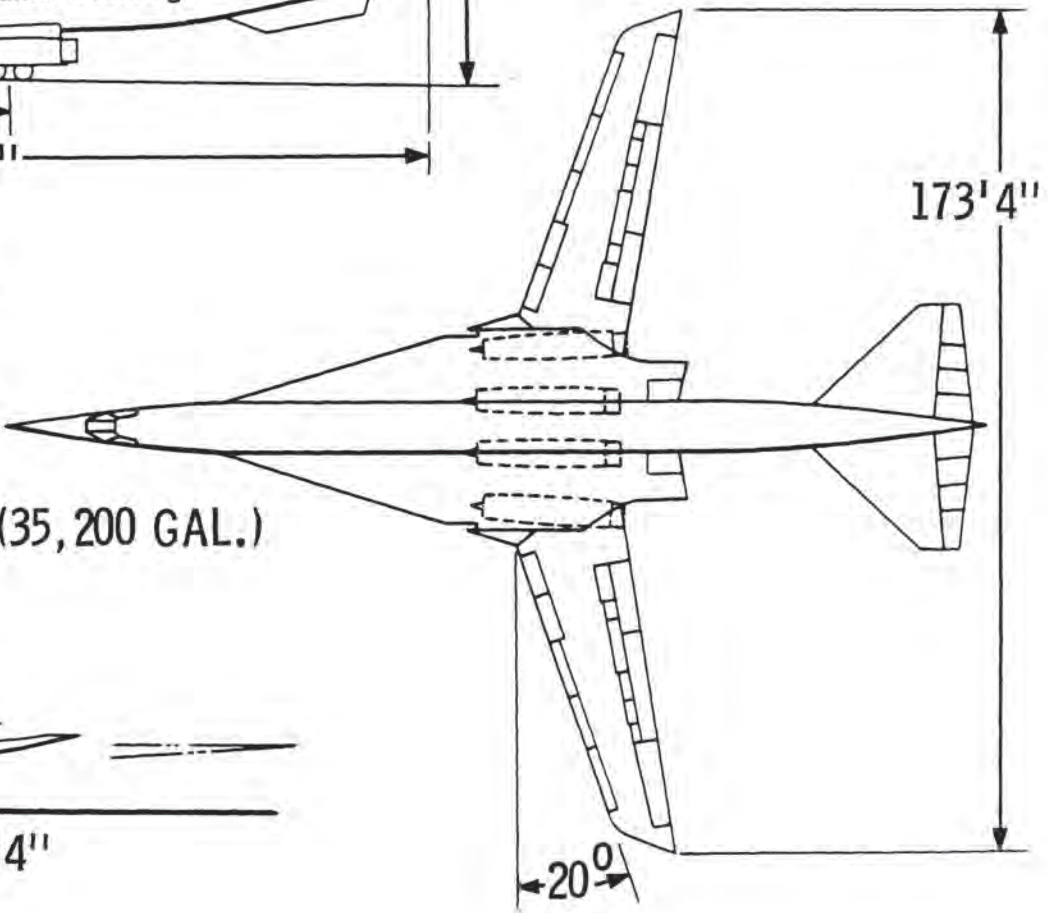

BOEING SUPERSONIC TRANSPORT

Two United States supersonic transport (SST) prototypes now under development at The Boeing Company's Seattle facility will be the forerunners of a new generation of 1,800-mile-an-hour passenger jetliners.

The Federal Aviation Administration (FAA) signed a contract with Boeing in May, 1967, for prototype construction.

The plane Boeing has designed will take off fully loaded at about the same speed and in less runway than a fully loaded Boeing 707 requires. Its landing-approach speed with the variable-sweep wings set forward at 20 degrees also will be about the same as current big jets.

During subsonic flight, the American SST's wings will be swept to an intermediate position; with the wings in this setting the airliner will cruise efficiently at speeds equal to those of subsonic airliners. For supersonic flight the SST wings, hinged on giant pivot bearings, will be swept to 72 degrees, allowing the big plane to sweep through the air at almost three times the speed of sound.

The ability to climb quickly after takeoff and to approach for landings at low power insures less noise at airport communities; additional sound-reduction features built into the engines mean even quieter operation.

The FAA announced December 31, 1966, that the Boeing SST design had been chosen winner in the three-year government competition. General Electric Company's design was picked for the huge SST engines.

Most of the SST will be built of titanium alloy of 90 per cent titanium, 6 per cent aluminum and 4 per cent vanadium.

The Boeing design evolved from a study of nearly 500 different configurations. Boeing's first study paper on the supersonic transport was written in 1952; a continuous SST project was established in 1958.

SPECIFICATIONS

Length Over-all -- 306 feet (92 m)
Wingspan, 20-Degree Sweep -- 180 feet (55 m)
Wingspan, 30-Degree Sweep -- 174 feet (53 m)
Wingspan, 72-Degree Sweep -- 106 feet (32 m)
Wing Area -- 9,000 sq. feet (836 m^2)
Height -- 46 feet (14 m)
Maximum Takeoff Weight -- 675,000 pounds (302.750 kg)
Maximum Payload -- 75,000 pounds (33.750 kg)
Passengers -- 250 to 350
Range with 313 Passengers -- Over 4,000 miles (6436 km)
Normal Cruising Speed -- Mach 2.7 or 1,800 mph (2896 km/h)
Normal Cruising Altitude -- 64,000 feet (19.507 m)

S-0278
(S-0246 Updated)
October, 1969

FROM: News Bureau, The Boeing Company
Seattle, Washington 98124
Phone: Area 206, 655-0793

BACKGROUND INFORMATION

BOEING FACILITIES FOR THE U.S. SST PROGRAM

The Boeing Company's commitment to the U.S. supersonic transport program is backed by more than $800 million in company-owned building and equipment resources located at 14 major industrial sites across the nation.

More than 75 per cent of the company's investment in these resources is oriented toward airplane work. Boeing also has access to six airfields. Nine of the industrial sites and four of the airfields are located in the Pacific Northwest, near the Boeing Developmental Center where two SST prototypes will be built.

The Developmental Center is a 108-acre complex located across a highway from Boeing Field International in Seattle. Its more than 1,700,000 square feet of covered work space contain laboratories, developmental shops, offices and a high bay assembly area for construction of the prototypes.

A new, 87,000-square-foot titanium plant, the most modern of its kind in the aerospace industry, and a 65,000-square-foot control development building have been placed in operation at the Developmental Center. A 54,000-square-foot extension to the high bay assembly area for prototype construction was completed in mid-1969.

A substantial amount of new equipment also is being acquired. In addition, the SST program will derive multiproject support from existing Boeing facilities, particularly those in the Seattle area.

Boeing's central fabrication complex, representing an initial investment of more than $110 million, is located in Auburn, Washington, about 17 miles from the Developmental Center. The complex consists of more than three million square feet of space for machining, processing and spar-milling in support of all Boeing programs.

-more-

Company laboratory and test facilities are concentrated primarily around Boeing Field. These include wind tunnels, mechanical and propulsion laboratories and engine test stands. Additional engine test facilities are located at the company's Boardman, Oregon, test site.

Boeing production sites in Seattle, Renton and Everett, Washington, are located near airfields. To supplement these fields and provide a site for crew training and flight testing, Boeing has leased the use of Grant County Airport, Moses Lake, Washington, although SST flight test activity will be centered at Boeing Field and Edwards Air Force Base, California.

###

S-0439
(S-0385 Updated)
February 1970

FROM: News Bureau, The Boeing Company
Seattle, Washington 98124
Phone: Area 206, 655-0793

BACKGROUND INFORMATION

PROFIT POTENTIAL OF SSTs IN COMMERCIAL OPERATION

A study shows that the U.S. SST can be operated at a profit using the same fare levels and incentive fare practices in effect for current subsonic jet fleets.

The Boeing study assumed airlines would use routes and operating techniques to prevent sonic booms over populated areas. The study indicated that even with flights at supersonic speed restricted to routes over the oceans and unpopulated areas such as the polar regions the 300-passenger U.S. SST would be the most productive airliner available during the next several decades.

An airplane's productivity is determined by how far and how fast a certain number of passengers can be moved. The U.S. SST will triple the speed of today's subsonic aircraft on long range overwater routes and will carry up to 300 persons in air-conditioned comfort along air corridors some 12 miles above the Earth.

One U.S. SST will be almost as productive as four 707s--or 500 DC-3s. According to study results the 300-passenger SST also will be about 75 per cent more productive than the 747 superjet equippped with 440 seats.

Forecasts indicate the total free world passenger air traffic will increase six-fold between 1968 and 1990 while the international traffic will increase eight-fold during the same period. The daily number of North Atlantic crossings would jump from about 250 in 1968 to 2,100 in 1990 if the only available jet transports were subsonics of the 707 class. Even if everyone crossed the Atlantic in 747 superjets there still would be about 700 crossings each day.

With overseas flights divided between SSTs and superjets, the study shows there would be a daily average of about 200 crossings by the subsonics and 600 crossings by the SSTs. The supersonics will utilize air space about 30,000 feet above that used by the subsonics and they will use it only about one-third as long. A complementary fleet of SSTs and superjets can keep the air traffic density at about the same level in the 1980s as it is today--although eight times as many passengers will be moved.

In addition, the study points out that the SST's great speed will make it possible to schedule flights throughout the day, and not just as certain departure times to take advantage of midnight to 6 a.m. curfews in effect at most airports. Peak traffic periods for long distance flights will level off.

-more-

Passenger preference for supersonic flight is expected to produce high load factors for several years after SSTs first enter commercial service, just as passenger preference for subsonic jets produced high load factors when the 707s first joined airline fleets. Later on, as SST service becomes more common, the great productivity of the SST will offset the steady increase in labor costs which will affect operating expenses of the subsonic jet transports more than it will affect the SST's operating costs.

Historically, with the passage of time, labor costs steadily increase because of inflation, wage increases and other factors. Because the SST is more productive per hour of labor, it is less sensitive to wage escalation pressures than subsonic jets.

###

S-9754
June 1970

FROM: News Bureau, The Boeing Company
Seattle, Washington 98124
Phone: Area 206, 655-0793

BACKGROUND INFORMATION

SST DELIVERY POSITIONS *

1.	Trans World Airlines	12
2.	Pan American World Airways	15
3.	Alitalia	6
4.	American Airlines	6
5.	El Al Israel	2
6.	BOAC	6
7.	Northwest Orient Airlines	6
8.	Japan Air Lines	5
9.	Qantas Airways	6
10.	Air France	6
11.	Air India	2
12.	Braniff International	2
13.	Delta Air Lines	3
14.	Trans-American	2
15.	Canadian Pacific Air Lines	3
16.	Irish International Airlines	2
17.	Lufthansa German Airlines	3
18.	Iberia	3
19.	KLM	6
20.	Pakistan International Airlines	2
21.	Eastern Air Lines	5
22.	World Airways	3
23.	United Air Lines	6
24.	Continental Airlines	3
25.	Air Canada	6
26.	Airlift International	1
		122

* Airlines listed in order they are to receive first aircraft.

Phase III Program Schedule

Start fabrication of full-scale mockup	April 1969
First prototype structure design release	April 1970
Complete major assembly work on mockup	June 1970
First prototype parts fabrication	July 1970
Begin No. 1 prototype major structural assembly	June 1971
Start No. 1 prototype final assembly	April 1972
Roll out No. 1 prototype from factory	August 1972
First flight of No. 1 prototype SST	Late 1972 or early 1973

** ** ** **

Comparison of Supersonics

(Production Models)

	U.S. SST	Concorde	TU-144
Maximum takeoff weight (lbs)	750,000	385,000	330,000
Fuselage length (feet)	298	193	188.5
Wing span (feet)	143	84	72
Tail height (feet)	53	38	34.5
Cruise speed: Mach	2.7	2.05	2.35
MPH	1,786	1,350	1,550
Passengers (maximum)	298	128	120

S-0793
(S-0562 Updated)
November 1970

FROM: News Bureau, The Boeing Company
Seattle, Washington 98124
Phone: Area 206, 655-0793

BACKGROUND INFORMATION

U.S. SST - PROTOTYPE FINANCING

The nationwide government-industry SST prototype development program which will have a projected $20 billion benefit to the U.S. economy by the end of the 1980s will cost an estimated $1.283 billion by the time two prototypes have completed 100 hours of flight testing.

Money for the prototype program is being advanced by the U.S. government, the customer airlines and the manufacturers. The government is contributing 90 per cent, less risk money provided by the airlines, and the manufacturers are providing 10 per cent, plus certain commercial and capital expenditures not covered by government contract.

For costs above a target incentive point, the government's share would be reduced to 75 per cent and the manufacturers' share would be increased to 25 per cent. The 75/25 split would go into effect at the point at which Boeing had spent $625 million on the airframe and General Electric $284 million on the engines.

A breakdown of the $1.283 billion prototype development phase cost shows that the government will contribute $1.051 billion, the airlines $59 million and the manufacturers $173 million. The $173 million includes the manufacturers' regular 10 per cent share of their contract costs ($62.5 million for Boeing and $28.4 million for G.E.) plus 25 per cent of a possible $328 million above the target incentive point.

However, these figures do not include costs during earlier phases of the program, or facilities and other expenditures on the part of the manufacturers.

The government contributed $291 million to the U.S. SST design competition which concluded with the selection of Boeing and General Electric to build the prototype aircraft and their engines. Boeing's and General Electric's share of the design competition costs were $17 million. This brings the overall cost for the competition and

-more-

development phases of the SST program to $1.591 billion (including $308 million spent during the competitive design phase).

The total spent by Boeing and its suppliers will come to about $240 million when all program expenditures and facilities are considered. General Electric will spend about $94 million in cash prior to production. The total manufacturers' contribution, then, will be $334 million. Additionally, the airlines have deposited $22.4 million in the U.S. treasury for delivery positions reserved with the government, making their total investment $81.0 million.

The contract under which the prototype development program was launched states how federal money will be repaid. Boeing and G.E. will make royalty payments at a rate which will return all invested funds to the government by the sale of about the 300th airplane.

After the investment has been repaid, royalty payments will be made on the sale of additional aircraft to allow the government a return on its investment.

Department of Transportation and Boeing economic studies indicate a minimum market for 540 U.S. SSTs. Under the royalty schedule in the contracts, the government will be repaid all invested funds plus a return of more than $1 billion on the sale of 500 aircraft.

###

S-0851
(S-0495 Updated)
FROM: News Bureau, The Boeing Company
Seattle, Washington 98124
Phone: Area 206, 655-0793

BACKGROUND INFORMATION

SST ENVIRONMENTAL ISSUES

Water Vapor

Speculation about supersonic transports creating contrails at high altitude has led some persons to fear that a permanent cloud cover will be formed with possible adverse effects on global temperatures.

Actually, at the cruise altitude of the U.S. SST--60,000 to 70,000 feet--contrails are rarely formed. The temperature and relative humidity are not right most of the time. During the past decade, military pilots have flown supersonic airplanes hundreds of thousands of hours at high altitude. Still, vapor trails above 60,000 feet are rare. Most contrails occur at the 30,000- to 40,000-foot altitudes where subsonic jet transports operate today.

All indications are that the SST's effects on the upper atmosphere will be negligible. Two scientific groups--the National Research Council of the National Academy of Sciences, and the Office of Meteorological Research--have studied the situation and reported there will be no appreciable disturbance of the Earth's normal atmospheric balance by a fleet of SSTs making 1,600 flights each day (NAS Report 1350, dated 1966).

The study by the National Academy of Sciences showed that 400 SSTs, each making four flights a day, would produce about 150,000 tons of water. Although this sounds impressive it is about the same amount of water injected into the stratosphere by a single large cumulonimbus cloud in the tropics, and is dispersed over vast areas.

A comprehensive study by the Science Policy Research Division of the Library of Congress (Sept. 21, 1970) came to the same conclusion: No detectible impact on the environment or on global weather patterns.

Carbon Emissions

Turbojet engines produce carbon monoxide--about half as much as an automobile engine, per pound of fuel burned. Hydrocarbon emissions, seen as black smoke, indicate inefficient burning of fuel; the latest jet engines do not smoke. No visible carbon emissions are expected from the SST's engines when the airliner enters commercial service in the late 1970s.

The SST engine with its high-temperature combustors will be one of the most efficient powerplants ever built. The smoke-free exhaust is estimated to contain some particles of solid material and some oxides; however, the quantity of toxic gases such as carbon monoxide (CO) is estimated to be smaller than those generated by internal combustion engines on buses and automobiles. Measurements of the exhaust gas composition of the SST engine are currently being made, and the results will be compared with the theoretical calculations for subsonic jet engines and automobiles.

The SST will have far less detrimental effect on the quality of the environment than any means of transportation developed to date. A study by Professor R. F. Sawyer of the University of California at Berkeley shows that carbon monoxide and hydrocarbon emissions for even today's jet engines during cruise conditions are less than one per cent of average automobile emissions. Put another way, a fleet of 500 SSTs, even if all flew at the same time, would emit about the same amount of pollutants per mile as 1,500 typical automobiles.

Noise and Sonic Boom

The SST engines' ample power will permit these sleek airliners to rise quickly over the community on takeoff. Thus the engine roar will be less than today's jets at the standard measuring point--usually 3-1/2 miles after the takeoff run begins. Using today's yardsticks for measuring sound, the U.S. SST will be quieter than today's jets on both climb-out and approach.

On landing, the plane's design (wide span with separate tail and high-lift devices) will give excellent low-speed handling characteristics, allowing the pilot to cut power for landing. In addition, he can adjust the engine inlet to block the turbine whine from coming out the front of the engine. The plane will be noisier on the runway than today's jets, but research and testing are being pushed to find technical solutions to this problem.

Sonic booms created by the SST will not be heard because supersonic flights will not be made over populated areas. At the SST's cruise altitude of about 65,000 feet, the maximum amount of over-pressure produced is from 2 to 2.5 pounds per square foot. This is comparable to the change in pressure experienced by rising 50 feet in an elevator. It could not break windows. But the pressure change is sudden and probably would be annoying to people under the flight path, so Federal Air Regulations prohibit boom-producing speed over land areas south of the Arctic Circle. Over oceans, the boom will go largely unnoticed and will not harm marine life in any way.

Radiation Exposure

Everyone is exposed to natural radiation. People living in Denver receive nearly three times as much radiation a year as people in New York. A three-fold increase sounds big but three times practically nothing still doesn't amount to much. In some areas of the world natural radiation is as high as 12,000 millirems per year (100 times the U. S. average). People live there about as well as anywhere else.

Supersonic flights at 65,000 feet would increase the radiation dose by a factor of three because the thinner atmosphere won't soak up as much of the radiation. The result is a stand-off: An average passenger on an SST would be exposed to three times the radiation that subsonic passengers would, but only one-third as long.

During periods of solar flare activity (usually on 11-year cycles) the additional radiation from a major solar flare could increase this exposure rate.

However, U. S. satellite systems regularly monitor solar flare activity and if a significant event occurred, there is plenty of time to divert to a lower altitude.

In Conclusion

The protection of our environment has become a highly vocal issue in recent months--and rightly so. Past management of our air, water and soil resources has not been adequate.

However, environmental protection should not become merely an emotional issue, but should be a continuing part of technical advances in any field. In this spirit, the SST will be the first aircraft designed with the environment in mind.

The SST will have no appreciable effect on the atmosphere. Its sonic boom will not be heard anywhere over land areas. It will present no radiation hazard to the traveler. Water vapor emissions will be less than normal fluctuations in stratospheric water content.

What the SST will do is provide a new, high-speed transportation system around the world — a long-range rapid transit system for the 1980s.

# # #

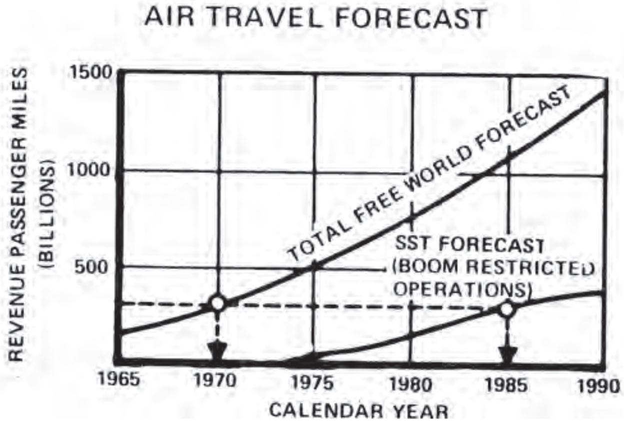

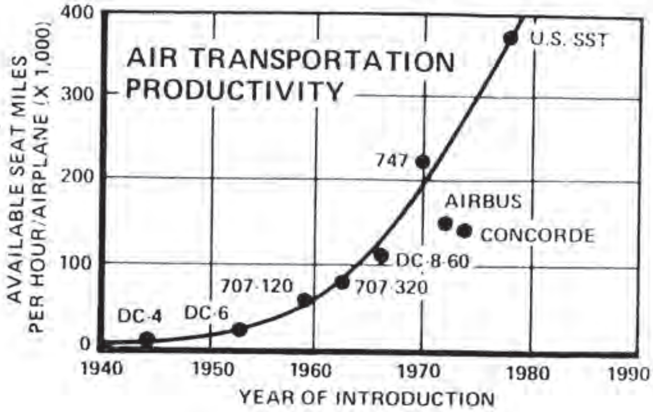

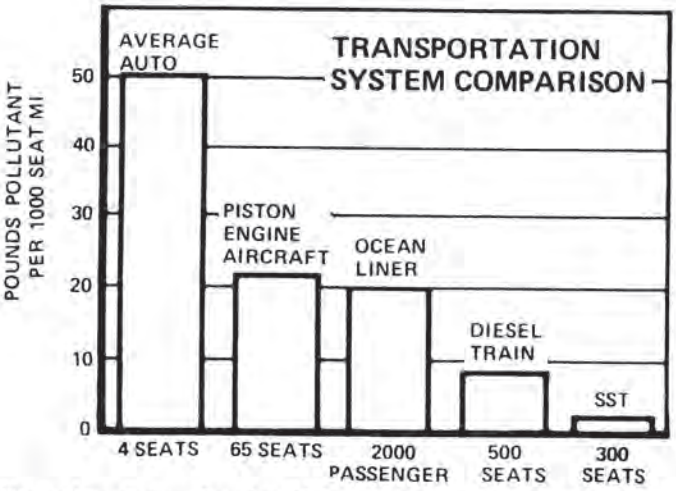

The value shown for the SST includes all fuel burned from engine start to shutdown.

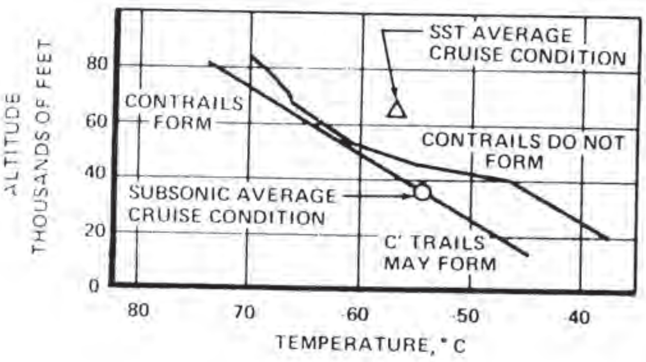

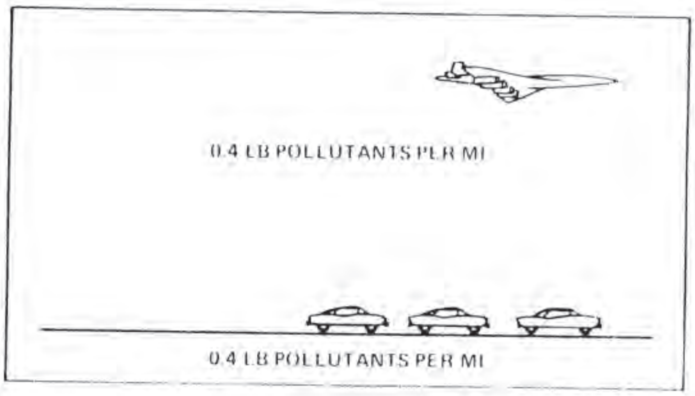

S-0877
(S-0384 Updated)
FROM: News Bureau, The Boeing Company
Seattle, Washington 98124
Phone: Area 206, 655-0793

January 1971

BACKGROUND INFORMATION

U. S. SUPERSONIC TRANSPORT FACT SHEET

What is the SST Program?

The SST development program is a national undertaking to assure the continued growth and prosperity of a significant sector of the national economy--air transportation. The SST program is being carried out as a partnership between the government, the manufacturers and the carriers, with each sharing the risks as well as the rewards.

The Office of Supersonic Development in the Department of Transportation, The Boeing Company, General Electric Company and most of the world's major airlines are principals in the U.S. SST program. In addition, thousands of subcontractors and suppliers will share in the production of the airplane and its systems.

What is the SST?

It is a passenger-carrying aircraft that will carry up to 300 people to any other place on Earth in 12 hours or less; out-racing the sun across the world's oceans. Its 1,800-mile-an-hour speed will enable it to slice through the night in about three hours if it flies toward the rising sun.

What is it Made Of?

Titanium is the basic material. This metal has a high strength-to-weight ratio. One square foot of titanium weighing 0.46 pound is as strong as a piece of stainless steel weighing 1.5 pounds. Perhaps even more important is titanium's heat-resisting capability. It easily holds its strength and shape at the 500-degrees-Fahrenheit temperatures created by flight at triple-sonic speeds. Titanium also resists cracks and corrosion.

-more-

SST Specifications

Prototypes are flying test beds which are used to test and verify the aircraft's basic design, its flight systems and components. Two prototypes are to be built and flight tested in the U.S. SST development program. Information gained during the flight test program will be used to modify and improve--if necessary--the SST production models, which may be somewhat larger than the prototypes. Prototype specifications are listed below:

PROTOTYPE

Length (approximate)	287 feet
Wingspan (approximate)	142 feet
Wingsweep	50.5 degrees
Wing area	7,700 square feet
Height (at tail)	50 feet
Engines (GE4/J)	67,000 pound thrust
Speed	1,800 miles per hour
Cruising altitude	60,000 to 70,000 feet

PRODUCTION

Range (approximate)	4,000 miles
Passengers	Up to 300
Seating Arrangements (typical)	Six abreast

Competition

The international SST sweepstakes began December 31, 1968, with the first flight of the Tu-144 by the Soviet Union. The Concorde, which is being built by the British and French governments, first flew March 2, 1969. Test flight programs for both the Concorde and the Tu-144 are said to be proceeding on schedule. As of early 1971, 74 Concordes had been ordered by seven U.S. and nine non-U.S. airlines. Best estimates are that about 20 Tu-144s have been ordered.

-more-

The Market

Revenue passenger miles in the free world are forecast to increase from six- to eight-fold between 1968 and 1990. One hundred twenty five billion dollars worth of new commercial aircraft will be required to carry this traffic. Of this expanding traffic growth, the SST market will total $25 billion by 1990, even with supersonic flight limited to routes over the oceans and sparsely populated areas such as the polar regions. The proposed American SST design, with its superior speed, payload and operational economics, can obtain at least $20 billion of the $25 billion market through the sales of an estimated 500 airplanes, 270 of them to foreign airlines. This projection assumes the Concorde development program will be successful, that Concorde sales will increase and that the U.S. SST will enter commercial service by 1978. As of September, 1969, 26 airlines had reserved delivery positions for 122 U.S. SSTs.

Jobs

For several years the aerospace industry was the largest single production element in the U.S. economy, but employment has declined during the past two years. Of a total national work force (excluding agricultural workers) of about 69 million in 1968, some 1,415,000 worked in the aerospace industry. This is compared with the auto industry's 880,000 employees and nearly 524,000 workers in the steel industry. The prospective direct nationwide employment for producting 500 SSTs will involve approximately 50,000 additional people at peak production. If the secondary or multiplier effects are considered, the SST program would support more than 150,000 additional people.

Cost Sharing

The U.S. Government is investing approximately $1.3 billion for the design, construction and flight test of two SST prototypes. The two major manufacturers (Boeing and General Electric) will contribute more than $300 million for the development program. The airlines are providing nearly $60 million in risk money plus an additional $22 million in delivery position payments. Boeing, alone, will commit more than $200 million--including facilities costs--to the SST development program by the end of the prototype flight test program. In addition, the major subcontractors and suppliers are sharing in the risks, with an investment of more than $25 million in facilities allocated to the SST.

The total costs of the SST development program, including $308 million for the competitive design phase and industrial contributions, are expected to be about $1.7 billion.

Investment Return

The government's investment of $1.3 billion will be repaid through royalties on the sale of production airplanes. This investment will be returned approximately by the 300th airplane and an additional $1 billion will be paid by the 500th airplane. The potential tax return benefits to the government through nationwide production of 500 SSTs is about five and one-half times the government's original $1.3 billion investment.

Balance of Trade

If the SST program is not pursued and supersonic technology is exploited in other countries, we will lose both new jobs and new tax revenues from the U.S. economic base. U.S. aircraft exports have been running at about $2 billion per year--the largest single factor in our favorable balance of trade. Delay in U.S. offering of a supersonic transport could do irreparable damage to this favorable balance of trade element. With only foreign-built SSTs, the total negative effect on the aircraft import and export account in the U.S. balance of trade could reach $22 billion by 1990.

-more-

Leadership

Progress made by the Russian and British/French governments in commercial SST development clearly demonstrates these governments' determination to compete for the SST commercial aircraft market in the decades ahead. They are learning a great deal from flight testing their prototype SSTs, and it is possible they soon could move on to second generation models with larger payloads and greater efficiency. If this were to happen in the near future it would pose a very serious threat to the presently accepted market of 500 U.S. SSTs by 1990.

The American SST prototype program must continue on schedule to assure continued dominance of American-built commercial aircraft in the international marketplace. First flight of the prototype aircraft is planned for late 1972, with commercial entry in 1978. This seems to be a considerable lead for the foreign SSTs, but the same situation prevailed in 1952 when British Comets introduced jet travel. The Boeing 707 did not enter commercial service until 1958 but within two or three years it (and the DC-8) had taken over a major share of the market. The reason: the U.S. builds a better, more efficient airplane.

###

S-0903
(S-0284 Updated)
February, 1971

FROM: News Bureau, The Boeing Company
Seattle, Washington 98124
Phone: Area 206, 655-0793

BACKGROUND INFORMATION

BOEING SST MILESTONES

Jan 1958 -- Permanent Boeing SST program established after several years preliminary studies and investigations.

Jun 1963 -- President Kennedy advocates United States SST program in speech at Air Force Academy graduation.

Aug 1963 -- First SST request for proposals issued by the Federal Aviation Agency.

Jan 1964 -- First Boeing proposal submitted in SST competition. Other competitors: Lockheed and North American Aviation, airframe; General Electric, Pratt & Whitney and Curtiss-Wright, engine.

May 1964 -- North American and Curtiss-Wright participation discontinued after first round.

Jun 1964 -- Second phase of U.S. SST competition begins. This marked first government financial participation on a fund-sharing basis with industry.

Nov 1964 -- SST second phase proposal submitted to the FAA.

Dec 1965 -- President Johnson announced further 18-month competitive phase.

Sep 1966 -- Phase III SST proposals submitted to FAA.

Dec 1966 -- Boeing and General Electric selected as prime SST contractors.

May 1967 -- FAA signs contract for Phase III of SST program. Boeing to build two SST prototypes and conduct 100 hours of flight testing.

Oct 1968 -- Fixed wing, conventional tail SST design selected for continued development.

Jan 1969 -- Boeing completes submittal of design recommendations to FAA and the airlines on schedule...announces readiness to begin prototype construction.

Sep 1969 -- President Nixon recommends SST go-ahead.

Apr 1970 -- Office of Supersonic Transport Development established in Department of Transportation; William M. Magruder, former test pilot of supersonic aircraft, named to direct Federal activities in support of SST program.

Jun 1970 -- Full-scale engineering mockup shown for first time. Secretary of Transportation John A. Volpe speaks at the Boeing Development Center.

-more-

Jul 1970 -- Boeing announces its nationwide team of subcontractors has been completed, with seven major U.S. firms to build the airframe.

Dec 1970 -- Prototype structural design releases reach 25 per cent.

Jan 1971 -- U.S. Senate approves Fiscal 1971 funds only through nine months of fiscal year, schedules vote on SST funding by March 31.

Feb 1971 -- Boeing announces major advance in SST engine noise suppression, promises plane will meet standards for airport operation.

###

SST PROGRAM

1965 through fall 1967

Throughout 1965, Boeing was one of four airframe and engine companies (Lockheed, G. E. and P & W) participating in competitive government contracts with the objective of winning a government funded contract, to design, develop and build two SST pre-production prototypes and complete 100 hours of test flying. Most of the SST effort in 1965 was performed against the following FAA government contracts:

Estimated cost was $6 million, incrementally funded at $1 million per month. The government shared 75 percent and Boeing shared 25 percent. The objective of this phase of the program was to further optimize airplane aerodynamic characteristics and develop design and test information for major airplane components such as the landing gear, high lift devices, engine inlet, flight control systems, and wing pivot; to conduct studies of improving the integration of these components and correct deficiencies found in the Phase II-A evaluation; and to update cost, schedule, and management plans for development and production.

FAA-SS-66-5 for Phase II-C of the SST competition. Period of performance is July 1, 1965 to December 31, 1966. Estimated cost is $60 million, incrementally funded. The government shares 75 percent and Boeing 25 percent. The Phase II-C effort is directed at developing and SST that is safe for the passenger and economically profitable to build and operate, and at attaining a state of readiness at the end of Phase II-C that will permit reasonable and effective execution of the subsequent prototype program.

Key activities during this period consist of configuration development, the conduct of key developmental hardware test programs, the development of mock-ups, engineering and tooling-design effort, systems and equipment development, laboratory tests, simulation, the updating of the management, economic and cost plans, and the preparation of final design and cost proposals for prototype development to be submitted by September 1, 1966. This date was originally October 15, 1966, but has been advanced to ensure completion of the government airline evaluation and the signing of a contract for Phase III pre-production prototype construction by January 1, 1967. This timing will provide for uninterrupted transition from Phase II-C into Phase III and a steady buildup of effort in Engineering, Tooling and Manufacturing until peak requirements are reached in early 1968. This orderly programming approach will also provide for an early first flight of the pre-production prototype airplanes. The following activities are scheduled for accomplishments by the fall of 1967:

(1) Substantial prototype structure and non-structure drawings will have been released based upon completion of space and arrangement mockups and developmental tests of critical components such as cabin and wing structure and engine inlet and exhaust systems.

(2) Most of the titanium raw material will have been ordered and a substantial portion delivered.

(3) Fabrication of major tools will have started and machining of large wing spars, chords, and stringers will be complete and ready for assembly.

(4) Total inplant and major subcontract program manpower will be approaching 10,000 people.

S-0911
(S-0283 Updated)
March 1971

FROM: News Bureau, The Boeing Company
Seattle, Washington 98124
Phone: Area 206, 655-0793

BACKGROUND INFORMATION

U. S. SUPERSONIC TRANSPORT

The two U.S. supersonic transport prototypes now in development will be the forerunners of a new generation of 1,800-mile-an-hour passenger jet airliners able to reach any location on Earth in less than a half-day's flying time.

The prototypes will be built by Boeing and General Electric in a government-industry program. Boeing will build airframes and General Electric the engines. Parts and major sections of the airplanes will be provided by a nationwide team of subcontractors and suppliers located in most of the 50 states.

The planes will be built of titanium, a metal stronger per pound than most stainless steels and able to withstand the heat generated by flight at 1,800 miles an hour. The SST prototypes will be about 287 feet long, 50 feet tall at the tail and have a 142 foot wingspan with a leading-edge sweep of 50 degrees. Their thin wings with large area and span, advanced high-lift devices and conventional tail will give them excellent performance in all flight regimes. Their superior low speed handling qualities will permit operation from existing international airports.

The prototypes will demonstrate the feasibility of commercial supersonic flight. During the flight test program, standards of operation, maintenance and reliability for airline service will be verified. At the completion of the 100-hour flight test program, it is expected that construction will begin on production versions of the SST for commercial use in the late 1970s.

The production planes will be somewhat larger than the prototypes. A typical configuration will carry up to 300 passengers in an aircraft 298 feet long and weighing 750,000 pounds at maximum design taxi weight. The early production models of the SST are designed to carry a full payload from Paris to New York (about 4,000 miles).

Passengers will find the U.S. SST more comfortable than today's jet airliners, providing wider seats, a smoother ride and shorter flight times. At cruising altitudes above 60,000 feet, the passenger cabin will be pressurized the same as today's jets. Each of the four powerful General Electric GE4 engines will produce more than 60,000 pounds thrust, providing ample power reserves.

-more-

The SST will help meet air transportation needs of the future in many ways. In addition to providing faster transport over long-distance, intercontinental routes, the SST will ease congestion by greatly increasing the usable air space. Just as subsonic jets flew at altitudes above non-jet traffic, SSTs will fly still higher, providing more highways in the skies.

When the U.S. supersonic transport comes into commercial service, air traffic control will be increasingly automated and many airport facilities greatly expanded. The SST will operate in an environment of advanced communications and navigation capabilities. Delays because of unanticipated storms or turbulence will be virtually eliminated. Automatic flight control systems now under development will make all-weather landings routine. New noise suppression techniques will make the SST as quiet at the airport as other large jet airliners of the late 1970s.

Market forecasts indicate that by 1990 air traffic will increase six-fold on domestic routes, and up to eight-fold on international routes where the SST's great speed will make a dramatic contribution to airline productivity and passenger convenience, meaning it will reduce the total number of planes in the air.

SST flights at supersonic speed will be limited to overwater routes because of sonic boom restrictions, but even so, minimum sales of 540 SSTs are expected by 1990. Foreign airlines will purchase about 270 American-built SSTs (plus spares), bringing in $13 billion of foreign exchange.

To date 26 of the world's arilines have reserved delivery positions for 122 U.S. SSTs. One foreign and nine U.S. airlines have invested $58.5 million risk capital besides depositing $200,000 per airplane in the U.S. treasury to hold their delivery positions. This capital and the government investment of approximately $1.2 billion for development through the prototype phase will be repaid, with interest, through royalties on SST sales.

###

S-0913
FROM: News Bureau, The Boeing Company
Seattle, Washington 98124
Phone: Area 206, 655-0793

March 1971

BACKGROUND INFORMATION

SST: THE QUIET NEIGHBOR

A series of developments in late 1970 resulted in predicted noise levels below previous estimates for the U.S. supersonic transport--levels which will make the SST one of the quietest of the large jet passenger planes of the 1980s.

Main thrust of work on a quieter SST centered on the "sideline" noise--measured one-third of a mile from each side of the runway. It has long been known that the SST would be quieter over the community on both takeoff and landing approach than most current airliners.

The Department of Transportation's SST Community Noise Advisory Committee confirmed in February, 1971, that a six-month study revealed the SST would be able to meet requirements laid down for new aircraft. The committee told William M. Magruder, SST development director for DOT, "we conclude that the level of technology demonstrated...is sufficient to achieve the noise level objectives."

Ojbectives for the SST were to meet the requirements of Federal Air Regulation 36. This regulation sets a limit of 108 perceived decibels in sideline noise, and 108 decibels over communities on takeoff and landing.

Magruder said continuing research between now and the time the SST will enter service in 1978 may well bring even more noise reduction.

The new developments included wind tunnel tests that showed the SST wing would be more efficient than anticipated; this in turn allowed an engine redesign to eliminate the use of noisy afterburners on takeoff.

The SST will fly over land at about 700 miles an hour, then accelerate to supersonic cruise only over the ocean. A typical SST flight will be 75 to 80 miles from a coastal airport before it makes a sonic boom. But where necessary the plane can fly long distances over land at subsonic speed.

###