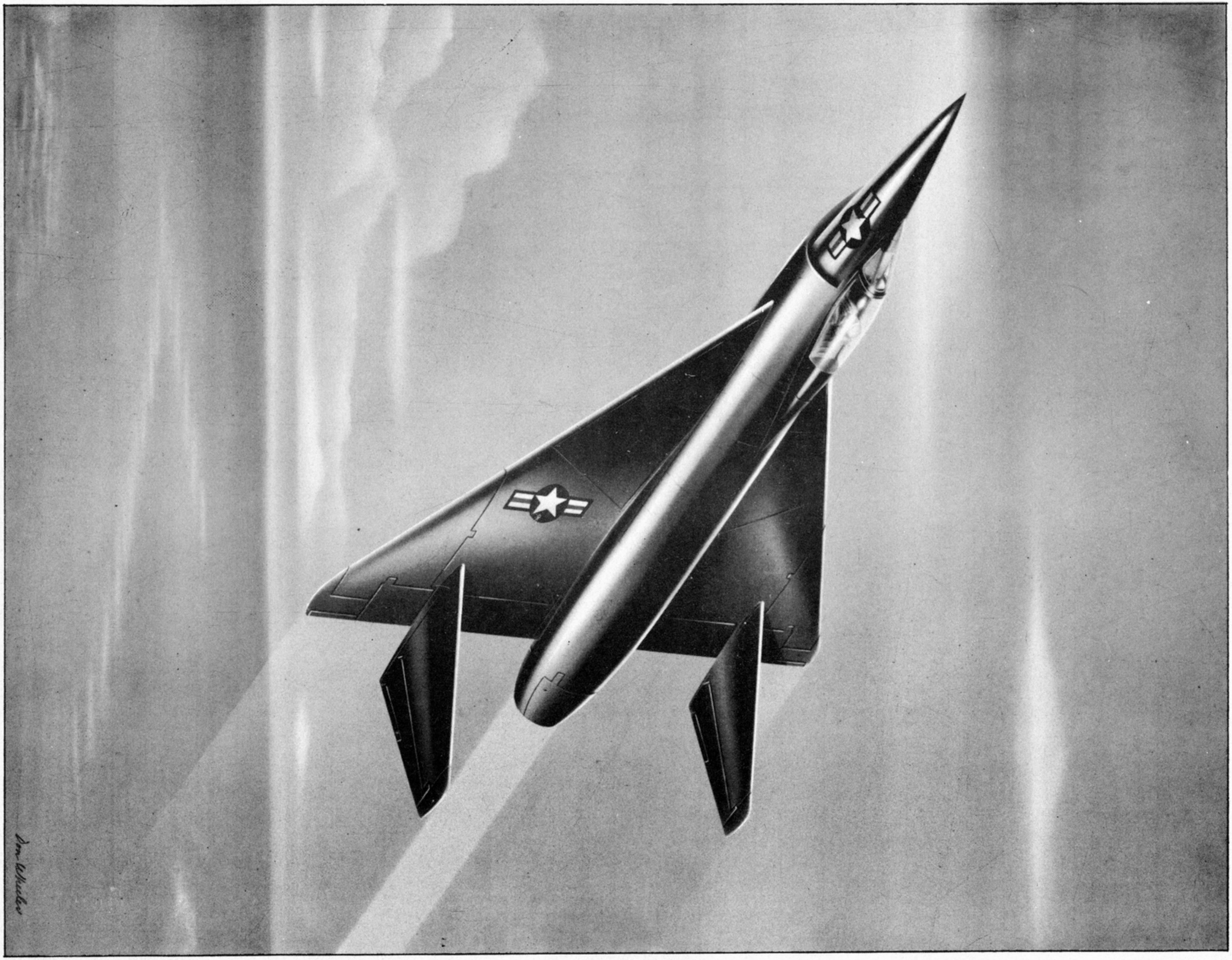

MODEL 60

NAVY
NAVY

NAVY

© 2009

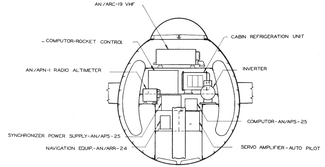

SECTION B-B

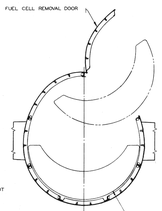

SECTION D-D

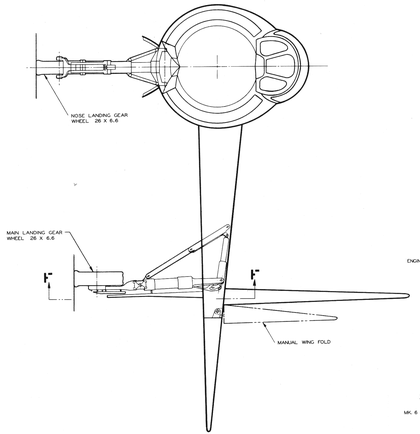

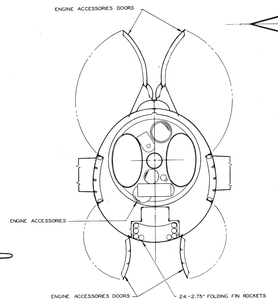

SECTION C-C

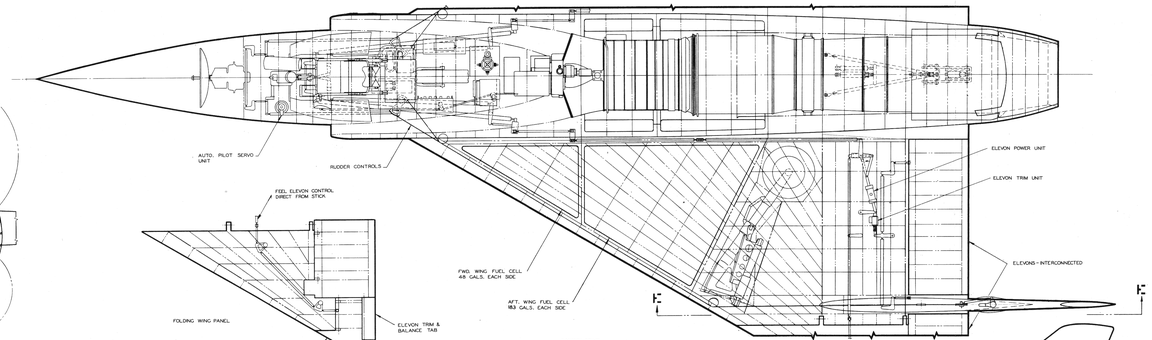

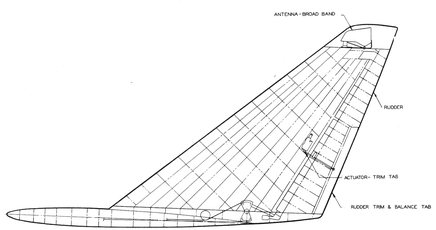

SECTION E-E

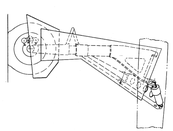

VIEW F-F

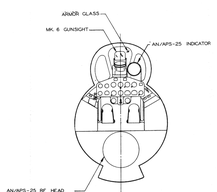

SECTION A-A

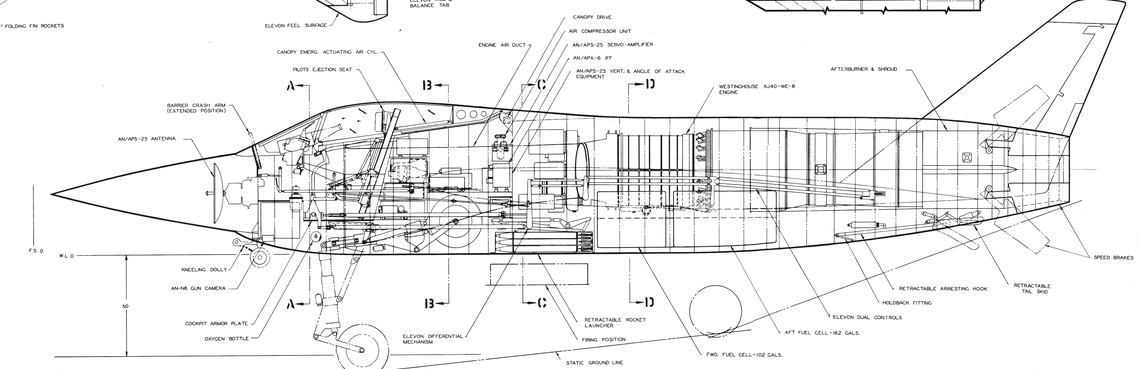

SCALE-INCHES

CONFIDENTIAL

INTERIOR ARRANGEMENT

MC DONNELL MODEL 60

15 September 1948

107a. The areas measured in accordance with Specification SR-45b dated 19 April 1940 are estimated to be as follows:

Wing area, total theoretical, including elevons and 98.6 sq. ft. of fuselage		440.0 sq. ft.
Elevon area, aft of hinge line, total		52.0 sq. ft.
Vertical tail area, total		95.0 sq. ft.
Fin, to rudder hinge	78.1 sq. ft.	
Rudder, aft of hinge	16.15 sq. ft.	

108a. The principal dimensions and general data of the airplane are nominally as follows:

Wings:	
Span, maximum	30 ft. 4 in.
Span, theoretical	31 ft. 10.6 in.
Span, wings folded	21 ft. 4 in.
Chord:	
At root (centerline of aircraft)	331.3 in.
At construction tip (theoretical extended section at tip)	0 in.
Mean aerodynamic	220.9 in.
Section	NACA 0007-64 (Mod.)
Incidence:	
At root	2 deg.
At construction tip	2 deg.
Sweepback of leading edge	60 deg.
Dihedral	0 deg.
Effective aspect ratio	2.31
Elevon:	
Span	11 ft. 8.6 in.
Chord, inboard	28 in.
Chord, outboard	18 in.
Tail:	
Vertical	
Section	NACA 0007-64 (Mod.)
Height, reference line level:	
Over tail	12 ft. 1.5 in.
Over cabin	11 ft. 1.5 in.
Height, maximum in kneeled position	16 ft. 2 in.
Length, maximum, static ground line level	44 ft. 11 in.
Center of gravity, combat loading condition:	
Horizontal location (percent MAC)	26.5%
Vertical location (above MAC)	0 in.
Ground angle with reference to water line	6 deg.
Wheel size:	
Main wheels	26 x 6.6
Nose wheel	26 x 6.6

MCDONNELL AIRCRAFT CORPORATION

CONFIDENTIAL

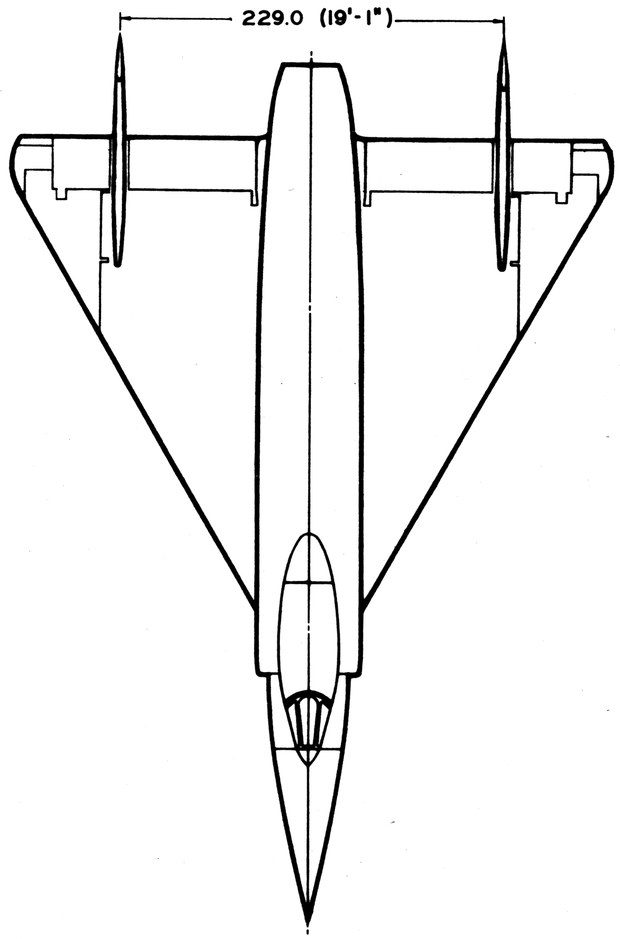

WING	
TOTAL THEORETICAL AREA INCLUDING ELEVONS AND 98.6 SQ. FT. OF FUS.	440 SQ. FT.
ELEVON AREA, AFT OF HINGE, TOTAL	52.0 SQ. FT.
TAIL	
VERTICAL TAIL AREA, TOTAL	95 SQ. FT.
FIN TO RUDDER HINGE	78.1 SQ. FT.
RUDDER, AFT OF HINGE	16.15 SQ. FT.
AIRFOIL DESIGNATION (PARALLEL TO ℄)	
WING	NACA 0007-64 MODIFIED
TAIL	NACA 0007-64 MODIFIED
INCIDENCE - WING	2°
DIHEDRAL - WING	0°
LENGTH OF M.A.C.	220.9 IN.
INCIDENCE OF M.A.C.	2°
DISTANCE FROM F.S. 0.00 TO L.E.M.A.C.	253 IN.

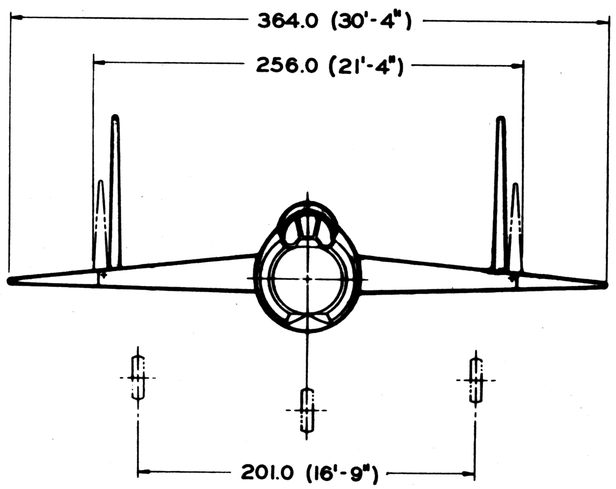

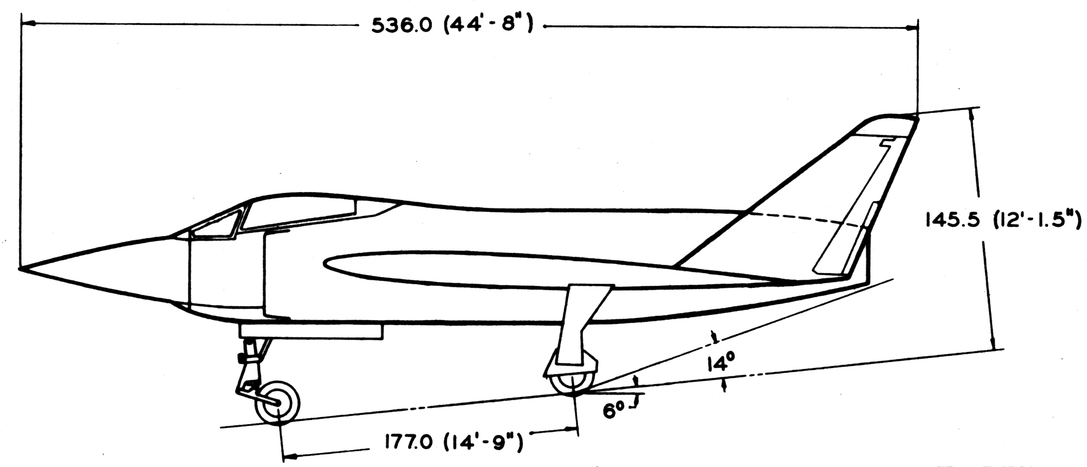

THREE VIEW
McDONNELL MODEL 60

CONFIDENTIAL

CONFIDENTIAL

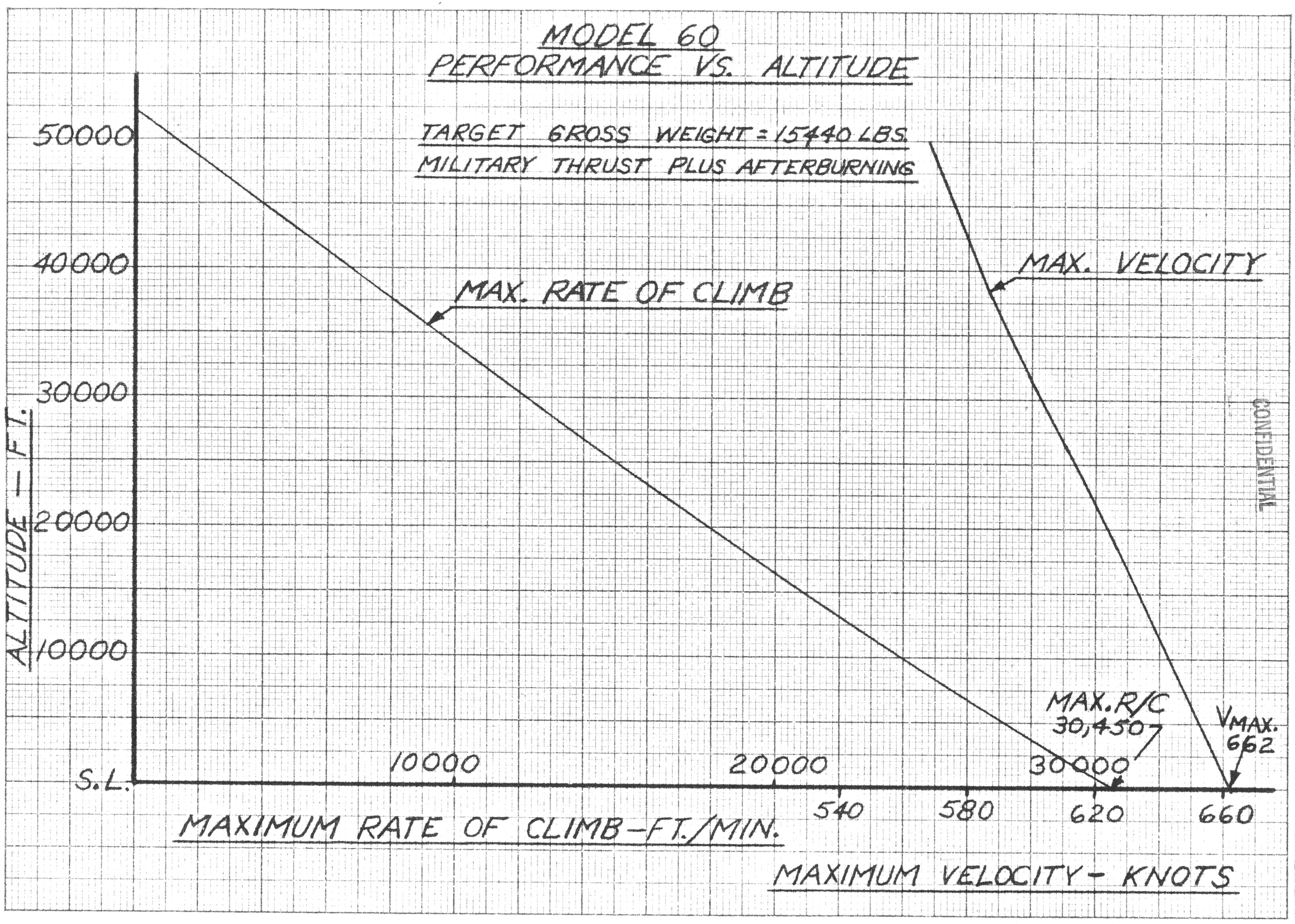

CONFIDENTIAL

McDonnell Model 60 History

Before the close of World War 2 (1939-1945), and in the period immediately following, the United States Navy (USN) raced to field its first jet-powered, carrier-launched fighters. Many developments existed and even more proposals were witnessed during this chapter of American aviation history that were to lead the service to acquire a whole new generation of fighter types heading into the next decade. A May 1948 requirement called for a new carrier-based, short-ranged single-seat turbojet-powered fleet defender / interceptor and, while the service eventually selected two different designs for the role - the Douglas F4D Skyray and the McDonnell F3H Demon, there lay several other submissions of note including the McDonnell "Model 60". As an interceptor, the design required excellent take-off and climbing capabilities to meet a given inbound threat in short order. Additionally, a dimensionally compact design was needed to keep the aircraft both lightweight and relatively small for storage and operation aboard space-strapped American carriers. McDonnell introduced two designs, the Model 59 and the Model 60, the former utilizing a more conventional swept-wing arrangement, very pointed nose cone assembly and traditional tail unit with single rudder fin. The Model 60, however, settled on a twin rudder approach with full delta wing configuration. The mainplanes ran against the sides of the cylindrical fuselage which sat the pilot at the front in the usual way, aft of a shallow nosecone assembly. A tricycle undercarriage would be used and excellent vision out-of-the-cockpit provided for by a largely unobstructed "teardrop-style" canopy. The selection of a delta wing allowed for more internal volume in the wings to be had. This meant that the main undercarriage legs could share space with additional fuel stores and possible armament while freeing volume from within the fuselage proper. A blended wing-body was not used however which would have benefitted the design even more. Besides the more obvious benefits of the delta wing championed by McDonnell engineers, another selling point of the approach was in improved handling characteristics and diving speeds. The rudder fins were set along the midway mark of each wing's trailing edge. The Model 60 borrowed some of the Model 58's design features - a sole Westinghouse XJ40-WE-8 turbojet engine would be used and this aspirated by an intake arrangement which contoured nicely about the rounded fuselage sides at the cockpit walls. The engine was to exhaust through a single, large port between the twin rudder fins so no wing surfaces would be exposed to jet wash. The same armament scheme seen in the Model 59 was also employed in the Model 60 and consisted of 24 x aerial rockets fitted into a retractable, ventrally-mounted launcher unit. It was estimated that the Model 60 could reach near-supersonic speeds during level flight and would most certainly be able to attain Mach 1.0+ speeds in a dive. The rocket armament gave it a healthy frontal "punch" against any incoming enemy target - particularly large Soviet bombers. As drawn up, the Model 60 was given a length of 45 feet and a wingspan of 30.3 feet. As a carrier aircraft it would also have been completed with the usual carrier-qualities such as reinforced undercarriage, tail arrestor hook and folding wings (the wings were set to fold outboard of each vertical tailplane). Maximum speed was estimated to be 762 miles per hour with a rate-of-climb nearing 30,450 feet per minute. At any rate the Model 60 was not selected for development and the design ended its days as nothing more than a "paper airplane". The USN certainly found its fighters in due time and went on to field some of the more classic of the Cold War carrier-based

aircraft to see the light of day. McDonnell continued to design and sell the service on various aircraft for the remainder of its operating days - including the fabulous F-4 "Phantom II" multirole platform which turned into a global success. McDonnell Model 60 Specification BASICS Year: 1948 Status: Cancelled Crew: 1 MANUFACTURING [0 Units]: McDonnell Aircraft - United States ROLES - Fighter - Interception - Navy / Maritime - X-Plane / Developmental DIMENSIONS Length: 44.95 ft (13.7 m) Width/Span: 30.35 ft (9.25 m) Height: 14.60 ft (4.45 m) WEIGHTS Empty Weight: 14,330 lb (6,500 kg) MTOW: 17,185 lb (7,795 kg) (Diff: +2,855lb) POWER 1 x Westinghouse XJ40-WE-8 turbojet engine developing 7,500lb of thrust . PERFORMANCE Maximum Speed: 761 mph (1,225 kph; 661 kts) Service Ceiling: 50,000 feet (15,240 m; 9.47 miles) Maximum Range: 1,087 miles (1,750 km; 945 nm) Rate-of-Climb: 30,450 ft/min (9,281 m/min) ARMAMENT PROPOSED: 24 x Aerial rockets held in a retractable ventral bay. VARIANTS Model 60 - Base Company Product Designation

Source: https://tvd.im/aviation/1390-mcdonnell-model-60.html