~~Bob Wiley~~

REVISION NOTICE

THESE ARE SUPERSEDING OR SUPPLEMENTARY PAGES TO SAME PUBLICATION OF PREVIOUS DATE
Insert these pages into basic publication
Destroy superseded pages

NAVAER 01-60JKD-504

6 86

NORTH AMERICAN AVIATION
COLUMBUS ENGINEERING DATA
OCT 29 1959
RECEIVED
TECHNICAL FILES

Illustrated Parts Breakdown

NAVY MODELS

FJ-4 • FJ-4B AIRCRAFT

PUBLISHED BY DIRECTION OF
THE CHIEF OF THE BUREAU OF AERONAUTICS

1 April 1958
Revised 1 July 1959

Reproduction for non-military use of the information or illustrations contained in this publication is not permitted without specific approval of the issuing service (BuAer or AMC). The policy for use of Classified Publications is established for the Air Force in AFR 205-1 and for the Navy in Navy Regulations, Article 1509.

LIST OF REVISED PAGES ISSUED

INSERT LATEST REVISED PAGES. DESTROY SUPERSEDED PAGES.

NOTE: The portion of the text affected by the current revision is indicated by a vertical line in the outer margins of the page.

Page No.	Date of Latest Revision
*B	1 July 1959
*C	1 July 1959
*D	1 July 1959
E	1 January 1959
i	1 January 1959
*ii	1 July 1959
iii	1 January 1959
iv	1 January 1959
v	1 January 1959
*vi	1 July 1959
vii	1 January 1959
1	1 April 1959
2	1 January 1959
3	1 January 1959
4	1 January 1959
13	1 January 1959
*14	1 July 1959
14A	1 January 1959
14B	1 January 1959
*14C	1 July 1959
*14D	1 July 1959
*15	1 July 1959
16	1 January 1959
17	1 January 1959
18	1 January 1959
19	1 January 1959
20	1 January 1959
20A	1 January 1959
20B	1 January 1959
20C	1 July 1958
20D	1 January 1959
20E	1 January 1959
20F	1 July 1958
20G	1 January 1959
20H	1 January 1959
20J	1 January 1959
20L	1 July 1958
20M	1 January 1959
31	1 January 1959
32	1 July 1958
40	1 April 1959
*41	1 July 1959
44	1 April 1959
45	1 April 1959
46	1 April 1959
49	1 July 1958
50	1 October 1958
51	1 October 1958
52	1 October 1958
53	1 October 1958
54	1 October 1958
55	1 October 1958
56	1 October 1958
72	1 July 1958
74	1 April 1959
79	1 July 1958
82	1 April 1959
*87	1 July 1959
*88	1 July 1959
91	1 July 1958
92	1 July 1958
93	1 July 1958
94	1 July 1958
95	1 July 1958
96	1 July 1958
97	1 July 1958
98	1 July 1958
99	1 July 1958
100	1 July 1958
101	1 July 1958
103	1 July 1958
104	1 October 1958
*105	1 July 1959
106	1 October 1958
*107	1 July 1959
108	1 July 1958
109	1 July 1958
110	1 July 1958
111	1 July 1958
112	1 July 1958
113	1 July 1958
114	1 October 1958
115	1 October 1958
119	1 July 1958
*124	1 July 1959
*125	1 July 1959
*126	1 July 1959
*127	1 July 1959
130	1 October 1958
131	1 July 1958
138	1 October 1958
139	1 October 1958
140	1 October 1958
142	1 October 1958
143	1 October 1958
144	1 October 1958
145	1 October 1958
149	1 October 1958
151	1 October 1958
*152	1 July 1959
*156	1 July 1959
164	1 April 1959
165	1 July 1958
166	1 July 1958
166A	1 April 1959
166B	1 April 1959
167	1 July 1958
168	1 July 1958
169	1 July 1958
170	1 July 1958
171	1 April 1959
172	1 July 1958
173	1 July 1958
178	1 July 1958
179	1 July 1958
180	1 April 1959
181	1 April 1959
182	1 April 1959
183	1 October 1958
184	1 October 1958
185	1 July 1958
187	1 July 1958
188	1 July 1958
189	1 July 1958
193	1 July 1958
194	1 July 1958
195	1 July 1958
196	1 July 1958
197	1 July 1958
201	1 July 1958
203	1 April 1959
204	1 January 1959
204A	1 January 1959
204B	1 January 1959
205	1 July 1958
207	1 July 1958
208	1 July 1958
*208A	1 July 1959
*208B	1 July 1959
*208C	1 July 1959
*208D	1 July 1959
209	1 July 1958
*210	1 July 1959
211	1 July 1958
212	1 July 1958
*214A	1 July 1959
*214B	1 July 1959
*214C	1 July 1959
*214D	1 July 1959
*215	1 July 1959
221	1 April 1959
*222	1 July 1959
*223	1 July 1959
224	1 July 1958
226	1 October 1958
227	1 January 1959
228	1 January 1959
229	1 January 1959
231	1 July 1958
237	1 July 1958
242	1 July 1958
244	1 July 1958
245	1 July 1958
249	1 October 1958
250	1 October 1958
251	1 October 1958
253	1 July 1958
254	1 July 1958
255	1 April 1959
256	1 October 1958
257	1 April 1959

*The asterisk indicates pages revised, added or deleted by the current revision.

ADDITIONAL COPIES OF THIS PUBLICATION MAY BE OBTAINED AS FOLLOWS: BuAer

USAF ACTIVITIES.—In accordance with Technical Order No. 00-5-2.

NAVY ACTIVITIES. — Submit request to nearest supply point listed below, using form NavAer-140; NASD, Philadelphia, Pa.; NAS, Alameda, Calif.; NAS, Jacksonville, Fla.; NAS, Norfolk, Va.; NAS, San Diego, Calif.; NAS, Seattle, Wash.; ASD, NSC, Guam.

For listing of available material and details of distribution see Naval Aeronautics Publications Index NavAer 00-500.

LIST OF REVISED PAGES ISSUED

INSERT LATEST REVISED PAGES. DESTROY SUPERSEDED PAGES.

NOTE: The portion of the text affected by the current revision is indicated by a vertical line in the outer margins of the page.

Page No.	Date of Latest Revision
264	1 July 1958
265	1 July 1958
267	1 April 1959
271	1 July 1958
273	1 October 1958
274	1 October 1958
275	1 October 1958
*276	1 July 1959
282	1 October 1958
*283	1 July 1959
*284	1 July 1959
285	1 October 1958
286	1 July 1958
288	1 July 1958
289	1 July 1958
290	1 July 1958
291	1 July 1958
*292	1 July 1959
293	1 July 1958
295	1 July 1958
*297	1 July 1959
298	1 July 1958
*299	1 July 1959
301	1 July 1958
302	1 October 1958
303	1 October 1958
304	1 October 1958
305	1 October 1958
306	1 October 1958
307	1 October 1958
308	1 October 1958
309	1 October 1958
310	1 October 1958
311	1 October 1958
312	1 July 1958
313	1 January 1959
314	1 January 1959
315	1 January 1959
316	1 January 1959
317	1 April 1959
318	1 April 1959
319	1 April 1959
320	1 January 1959
321	1 January 1959
322	1 January 1959
323	1 January 1959
324	1 January 1959
325	1 July 1958
*326	1 July 1959
*327	1 July 1959
*328	1 July 1959
*329	1 July 1959
*330	1 July 1959
*331	1 July 1959
*332	1 July 1959
*333	1 July 1959
*334	1 July 1959
335	1 April 1959
336	1 July 1958
337	1 July 1958
338	1 April 1959
*338A	1 July 1959
338B	1 July 1958
339	1 April 1959
342	1 January 1959
346	1 July 1958
348	1 July 1958
349	1 April 1959
350	1 July 1958
351	1 April 1959
352	1 July 1958
353	1 January 1959
354	1 January 1959
355	1 January 1959
356	1 January 1959
357	1 January 1959
358	1 July 1958
360	1 July 1958
361	1 July 1958
365	1 January 1959
367	1 July 1958
369	1 January 1959
370	1 January 1959
371	1 July 1958
372	1 July 1958
373	1 July 1958
377	1 January 1959
*379	1 July 1959
*380	1 July 1959
*380A	1 July 1959
*380B	1 July 1959
381	1 April 1959
383	1 July 1958
384	1 July 1958
385	1 January 1959
386	1 January 1959
*387	1 July 1959
388	1 April 1959
*389	1 July 1959
390	1 July 1958
391	1 July 1958
392	1 July 1958
393	1 July 1958
*394	1 July 1959
395	1 July 1958
396	1 July 1958
*397	1 July 1959
*398	1 July 1959
399	1 October 1958
401	1 July 1958
402	1 October 1958
403	1 July 1958
*404	1 July 1959
405	1 July 1958
406	1 July 1958
*408	1 July 1959
*409	1 July 1959
410	1 October 1958
411	1 October 1958
412	1 October 1958
413	1 October 1958
414	1 October 1958
415	1 July 1958
416	1 July 1958
417	1 October 1958
418	1 July 1958
419	1 October 1958
420	1 October 1958
421	1 July 1958
423	1 July 1958
427	1 July 1958
428	1 July 1958
429	1 July 1958
434	1 July 1958
435	1 July 1958
436	1 January 1959
437	1 January 1959
438	1 January 1959
439	1 July 1958
440	1 October 1958
441	1 October 1958
442	1 January 1959
443	1 October 1958
*445	1 July 1959
446	1 October 1958
*449	1 July 1959
450	1 October 1958
451	1 October 1958
463	1 October 1958
464	1 April 1959
466	1 April 1959
477	1 October 1958
478	1 October 1958
482	1 July 1958
483	1 July 1958
484	1 July 1958
485	1 July 1958
486	1 October 1958
487	1 July 1958
488	1 July 1958
491	1 January 1959
493	1 January 1959
494	1 January 1959
495	1 January 1959
496	1 January 1959
499	1 July 1958
500	1 January 1959
501	1 January 1959
502	1 January 1959
503	1 January 1959
504	1 January 1959
506	1 January 1959
507	1 January 1959
513	1 October 1958
519	1 April 1959
521	1 April 1959
522	1 January 1959
523	1 January 1959
524	1 January 1959
525	1 January 1959
526	1 July 1958
527	1 July 1958
528	1 July 1958
529	1 July 1958
531	1 July 1958
532	1 July 1958
533	1 July 1958
534	1 July 1958
535	1 July 1958
536	1 July 1958
537	1 July 1958
538	1 July 1958
539	1 July 1958
540	1 July 1958
542	1 July 1958
543	1 July 1958
544	1 October 1958
545	1 October 1958
549	1 October 1958
550	1 October 1958
551	1 October 1958
554	1 July 1958
555	1 July 1958
556	1 July 1958
557	1 October 1958
558	1 July 1958
559	1 July 1958

*The asterisk indicates pages revised, added or deleted by the current revision.

BuAer

LIST OF REVISED PAGES ISSUED

INSERT LATEST REVISED PAGES. DESTROY SUPERSEDED PAGES.

NOTE: The portion of the text affected by the current revision is indicated by a vertical line in the outer margins of the page.

Page No.	Date of Latest Revision
562	1 July 1958
563	1 July 1958
564	1 July 1958
565	1 July 1958
566	1 January 1959
567	1 January 1959
568	1 January 1959
569	1 January 1959
570	1 January 1959
577	1 January 1959
579	1 October 1958
580	1 October 1958
581	1 October 1958
582	1 October 1958
583	1 October 1958
584	1 October 1958
586	1 July 1958
587	1 July 1958
588	1 July 1958
589	1 July 1958
590	1 October 1958
591	1 October 1958
592	1 October 1958
595	1 October 1958
596	1 October 1958
597	1 October 1958
598	1 October 1958
599	1 October 1958
600	1 July 1958
601	1 July 1958
602	1 July 1958
608	1 July 1958
610	1 July 1958
616	1 October 1958
617	1 October 1958
618	1 October 1958
619	1 October 1958
623	1 October 1958
625	1 October 1958
626	1 October 1958
627	1 October 1958
628	1 January 1959
629	1 October 1958
631	1 October 1958
632	1 October 1958
633	1 October 1958
635	1 October 1958
636	1 July 1958
637	1 January 1959
638	1 July 1958
639	1 January 1959
640	1 October 1958
641	1 October 1958
642	1 October 1958
643	1 January 1959
644	1 January 1959
645	1 January 1959
646	1 October 1958
647	1 January 1959
648	1 April 1959
649	1 April 1959
650	1 July 1958
651	1 July 1958
652	1 July 1958
654	1 January 1959
655	1 April 1959
656	1 January 1959
657	1 April 1959
659	1 January 1959
660	1 January 1959
662	1 January 1959
663	1 January 1959
664	1 January 1959
665	1 January 1959
667	1 January 1959
669	1 January 1959
670	1 January 1959
*671	1 July 1959
673	1 July 1958
674	1 April 1959
675	1 April 1959
679	1 January 1959
*680A	1 July 1959
680B	1 January 1959
682	1 January 1959
*683	1 July 1959
685	1 April 1959
686	1 July 1958
687	1 July 1958
689	1 January 1959
692A	1 January 1959
692B	1 January 1959
693	1 January 1959
694	1 January 1959
695	1 January 1959
696	1 January 1959
697	1 January 1959
698	1 January 1959
699	1 January 1959
700	1 January 1959
701	1 January 1959
702	1 January 1959
703	1 January 1959
*705	1 July 1959
706	1 January 1959
707	1 July 1958
708	1 October 1958
709	1 January 1959
710	1 January 1959
711	1 April 1959
712	1 July 1958
713	1 July 1958
715	1 October 1958
718	1 July 1958
719	1 July 1958
721	1 October 1958
723	1 October 1958
726	1 January 1959
727	1 April 1959
730	1 April 1959
731	1 April 1959
732	1 April 1959
735	1 October 1958
737	1 October 1958
751	1 April 1959
752	1 April 1959
753	1 October 1958
754	1 April 1959
756	1 January 1959
757	1 January 1959
758	1 January 1959
759	1 January 1959
763	1 July 1958
*764	1 July 1959
*764A	1 July 1959
764B	1 January 1959
*764C	1 July 1959
764D	1 January 1959
765	1 January 1959
766	1 January 1959
767	1 January 1959
769	1 April 1959
770	1 July 1958
771	1 January 1959
772	1 January 1959
773	1 October 1958
775	1 October 1958
779	1 October 1958
780	1 October 1958
781	1 October 1958
782	1 January 1959
783	1 January 1959
784	1 January 1959
785	1 July 1958
786	1 January 1959
787	1 January 1959
788	1 January 1959
788A	1 April 1959
788B	1 April 1959
789	1 April 1959
791	1 April 1959
*792	1 July 1959
*792A	1 July 1959
*792B	1 July 1959
*792C	1 July 1959
*792D	1 July 1959
*793	1 July 1959
*794A	1 July 1959
*794B	1 July 1959
*794C	1 July 1959
794D	1 April 1959
795	1 April 1959
*796A	1 July 1959
*796B	1 July 1959
*797	1 July 1959
798	1 July 1958
*799	1 July 1959
*800	1 July 1959
*800A	1 July 1959
*800B	1 July 1959
801	1 April 1959
802	1 April 1959
805	1 April 1959
808	1 July 1958
*809	1 July 1959
811	1 April 1959
812	1 April 1959
*815	1 July 1959
*817	1 July 1959
820	1 July 1958
821	1 January 1959
826	1 January 1959
827	1 January 1959
*828	1 July 1959
829	1 April 1959
*830	1 July 1959
831	1 July 1958
832	1 July 1958
833	1 July 1958
834	1 July 1958
835	1 July 1958
836	1 July 1958
842	1 July 1958
843	1 July 1958
844	1 October 1958
845	1 October 1958
848	1 April 1959

*The asterisk indicates pages revised, added or deleted by the current revision.

LIST OF REVISED PAGES ISSUED

INSERT LATEST REVISED PAGES. DESTROY SUPERSEDED PAGES.

NOTE: The portion of the text affected by the current revision is indicated by a vertical line in the outer margins of the page.

Page No.	Date of Latest Revision
849	1 April 1959
850	1 April 1959
851	1 April 1959
852	1 April 1959
854	1 January 1959
855	1 April 1959
856	1 April 1959
862	1 January 1959
863	1 April 1959
864	1 April 1959
864A	1 January 1959
864B	1 January 1959
865	1 July 1958
*866	1 July 1959
*867	1 July 1959
*868	1 July 1959
872	1 July 1958
873	1 July 1958
874	1 July 1958
875	1 July 1958
891	1 April 1959
892	1 July 1958
893	1 July 1958
895	1 January 1959
896	1 January 1959
897	1 January 1959
898	1 January 1959
899	1 January 1959
900	1 January 1959
901	1 January 1959
*902	1 July 1959
903	1 April 1959
*904	1 July 1959
*904A	1 July 1959
*904B	1 July 1959
*905	1 July 1959
*906	1 July 1959
*907	1 July 1959
*908	1 July 1959
*909	1 July 1959
*910	1 July 1959
*911	1 July 1959
*912	1 July 1959
*913	1 July 1959
*914	1 July 1959
914A	1 January 1959
914B	1 January 1959
*915	1 July 1959
*916	1 July 1959
*917	1 July 1959
*919	1 July 1959
*920	1 July 1959
*921	1 July 1959
*922A	1 July 1959
*922B	1 July 1959
*923	1 July 1959
*924	1 July 1959
*925	1 July 1959
*927	1 July 1959
*928	1 July 1959
*928A	1 July 1959
*928B	1 July 1959
*929	1 July 1959
*930	1 July 1959
*931	1 July 1959
*933	1 July 1959
*934A	1 July 1959
*934B	1 July 1959
*934C	1 July 1959
*934D	1 July 1959
*935	1 July 1959
*936	1 July 1959
*937	1 July 1959
*938	1 July 1959
*939	1 July 1959
*940	1 July 1959
*941	1 July 1959
942	1 January 1959
943	1 January 1959
*944	1 July 1959
*945	1 July 1959
951	1 April 1959
952	1 April 1959
953	1 April 1959
954	1 April 1959
955	1 July 1958
956	1 July 1958
956A	1 July 1958
956B	1 January 1959
957	1 January 1959
958	1 July 1958
959	1 July 1958
*960	1 July 1959
*961	1 July 1959
963	1 July 1958
964	1 July 1958
965	1 January 1959
966	1 January 1959
*967	1 July 1959
968	1 July 1958
969	1 July 1958
970	1 January 1959
971	1 July 1958
973	1 January 1959
975	1 July 1958
976	1 July 1958
977	1 April 1959
979	1 July 1958
980	1 April 1959
986	1 July 1958
991	1 April 1959
992	1 April 1959
992A	1 October 1958
992B	1 October 1958
992C	1 October 1958
992D	1 October 1958
1000	1 July 1958
1001	1 July 1958
1002	1 July 1958
1003	1 January 1959
1004	1 July 1958
1005	1 July 1958
1006	1 July 1958
1007	1 July 1958
1009	1 April 1959
*1010	1 July 1959
1012	1 April 1959
1013	1 January 1959
1014	1 January 1959
1015	1 January 1959
1016	1 April 1959
1017	1 April 1959
1019	1 April 1959
*1021	1 July 1959
1022	1 January 1959
1023	1 January 1959
1024	1 January 1959
1025	1 January 1959
1027	1 January 1959
*1030 thru 1268	1 July 1959

*The asterisk indicates pages revised, added or deleted by the current revision.

BuAer

LIST OF REVISED PAGES ISSUED

INSERT LATEST REVISED PAGES. DESTROY SUPERSEDED PAGES.

NOTE: The portion of the text affected by the current revision is indicated by a vertical line in the outer margins of the page.

*The asterisk indicates pages revised, added or deleted by the current revision.

TABLE OF CONTENTS

SECTION I - INTRODUCTION

	PAGE
Introduction	1
How to Use This Illustrated Parts Breakdown	2
Example Nomenclature Page Guide	4
Example Index Page Guide	5
NAA Drawing System	6
NAA Drawing Number Chart	7
Federal Stock Number Data Explanation	8
Maintenance Code Data Explanation	10
Vendors Code	13
Separate Illustrated Parts Breakdown List	20B
Useable On Code	21
View of Complete Aircraft	32

SECTION II - GROUP ASSEMBLY PARTS LIST

AIRFRAME

Outboard Wing

Structure

Outboard Wing to Inboard Wing, Inboard Wing to Fuselage Attaching Parts	34
Access Doors, Inspection Doors and Panels	36
Wing Tip and Outboard Droop Leading Edge Attaching Parts	39
Droop Leading Edge	40
Skin Attaching Parts (Upper)	42
Skin Attaching Parts (Lower)	44
Frame Assembly	47
Spare Outboard Wing, Inboard Wing and Inboard Wing Root Leading Edge Assemblies	974

Inboard Wing

Structure

Access Doors, Inspection Doors and Panels (Upper)	48
Access Doors, Inspection Doors and Panels (Lower) (Sheet 1)	52
Access Doors, Inspection Doors and Panels (Lower) (Sheet 2)	53
Main Landing Gear Trunnion Door and Fittings	57
Main Landing Gear Strut Door Assembly	58
Wingfold Break and Adjustment Fittings	62
Skin Attaching Parts (Upper)	73
Skin Attaching Parts (Lower)	74
Frame Assembly and External Stores Fittings (Sheet 1)	84
Frame Assembly and External Stores Fittings (Sheet 2)	85
Rear Spar Assembly	92
Droop and Leading Edge Assemblies (Sheet 1)	96
Droop and Leading Edge Assemblies (Sheet 2)	97
Rear Spar to Trailing Edge, Aileron and Flap Attaching Parts	102
Trailing Edge and Aileron Frame Assembly	104
Trailing Edge, Spoilers and Flap Frame Assemblies	108
Lower Landing Gear Trunnion Skin External Doubler - Applicable to Aircraft Coded (KA)	114
Splice Plates	116
Main Landing Gear Trunnion	120
Spare Outboard Wing, Inboard Wing and Inboard Wing Root Leading Edge Assemblies	974

Main Landing Gear

Uplock Mechanism, Fittings, Strut and Wheel	124
Shock Strut Assembly	128
Oleo Assembly	130
Wheel Assembly and Tire	131
Wheel Brake Assembly	132
Side Brace Assembly	134

Forward Fuselage

Structure

Attaching Parts (Fus Sta 236.25)	136
Attaching Parts (Fus Sta 53 and Sta 131)	137
Access Doors, Inspection Doors and Panels (Fus Sta 0 to 53)	138
Radio, Radar and Electrical Bay Access Door	141
Oxygen Bottle Access Door	142
Gun Bay Air Purge Door	146
Frame Assembly (Fus Sta 0 to 53)	148
Nose Landing Gear Trunnion Fittings	150
Access Doors, Inspection Doors and Panels (Fus Sta 53 to 131)	152
Nose Landing Gear Fairing Door	157
Gun Bay Access Door Assembly	158
Ammo Bay Door Assembly (Fus Sta 90.5 to 116.125)	162
Frame Assembly (Fus Sta 53 to 131)	164
Access Doors, Inspection Doors and Panels (Fus Sta 131 to 236.25)	168
Main Landing Gear Wheel Door	174

TABLE OF CONTENTS (Cont)

PAGE

Structure (Cont)
Catapult Holdback Door ---- 178
Engine Access Door Assembly ---- 180
Frame Assembly (Fus Sta 131 to 236.25) ---- 184
Side Panel Assembly (Fus Sta 131 to 236.25) ---- 186

Canopy
Windshield and Frame Assembly ---- 188
Operating Mechanism ---- 190
Canopy Assembly ---- 192
Frame Assembly ---- 196
Canopy Release Mechanism, Internal and Emergency ---- 198

Cockpit Furnishings
Pilots Furnishings - Applicable to Aircraft Coded (ET) ---- 202
Pilots Seat Assembly - Applicable to Aircraft Coded (ET) ---- 204
Pilots Furnishings - Applicable to Aircraft Coded (FR) ---- 206
Pilots Furnishings - Applicable to Martin-Baker Equipped Aircraft ---- 208B
Pilots Ejection Seat Headrest Assembly ---- 210
Pilots Rear Armor Plate and Seat Catapult Release ---- 214
Armor Plate and Attaching Parts - Applicable to Martin-Baker Equipped Aircraft ---- 214B
Pilots Seat Assembly - Applicable to Aircraft Coded (FR) ---- 216
Pilots Ejection Seat Carriage Assembly ---- 218
Pilots Ejection Seat Catapult Assembly ---- 221
Canopy Emergency Jettison System ---- 222
Anti "G" Suit and Turn and Bank Systems (See Electrical and Instrument)

Nose Landing Gear
Uplock and Operating Mechanism ---- 224
Emergency Release Equipment ---- 228
Drag Brace Assembly ---- 230
Bungee Assemblies ---- 232

Catapult
Holdback ---- 234
Hook ---- 236

Aft Fuselage

Structure
Attaching Parts (Fus Sta 331.5) ---- 238
Access Doors, Inspection Doors and Panels (Fus Sta 236.25 to 331.5) (Sheet 1) ---- 240
Access Doors, Inspection Doors and Panels (Fus Sta 236.25 to 331.5) (Sheet 2) ---- 241
Frame Assembly (Fus Sta 236.25 to 331.5) ---- 244
Frame Assembly Titanium Components (Fus Sta 236.25 to 331.5) ---- 246
Access Doors, Inspection Doors, Panels, Aspirator and Vortex Generators (Fus Sta 331.5 to 429) ---- 250
Arresting Gear Aft Door Assembly - Applicable to Aircraft Coded (ET) ---- 252
Frame Assembly (Fus Sta 331.5 to 399.781) ---- 256
Frame Assembly Titanium Components (Fus Sta 331.5 to 399.781) ---- 258
Spare Aft Section Fuselage Assembly ---- 980

Speed Brake
Forward Speed Brake and Attaching Parts ---- 262
Aft Speed Brake Attaching Parts - Applicable to Aircraft Coded (FR) ---- 264
Aft Speed Brake - Applicable to Aircraft Coded (FR) ---- 266
Door Closing Bungee Aft - Applicable to Aircraft Coded (FR) ---- 269

Arresting Gear
Chassis and Attaching Parts ---- 270
Bumper and Uplock Assembly ---- 274
Snubber Assembly ---- 276

Tail Bumper
Tail Bumper ---- 279

Tow Target
Tow Target Release Mechanism ---- 280

Empennage

Structure
Elevator Assembly ---- 284
Fairing and Access Doors ---- 286
Horizontal Stabilizer Assembly ---- 290
Horizontal and Vertical Stabilizer to Fuselage Attaching Parts ---- 294
Vertical Stabilizer Assembly ---- 296
Rudder and Trim Tab Assembly ---- 300
Spare Vertical Stabilizer and Rudder Trim Tab Assembly ---- 986

FUEL SYSTEM

Air Pressure System - Applicable to Aircraft Coded (ET) ---- 302
Air Pressure System - Applicable to Aircraft Coded (FR) ---- 311
Vent System - Applicable to Aircraft Coded (ET) ---- 312

TABLE OF CONTENTS (Cont)

PAGE

FUEL SYSTEM (Cont)
Refueling System - Applicable to Aircraft Coded (A) 318
Vent System - Applicable to Aircraft Coded (FR) 325
Transfer System - Applicable to Aircraft Coded (A) 326
Transfer System - Applicable to Aircraft Coded (HD) 333
Transfer System - Applicable to Aircraft Coded (FR) 334
Refueling System - Applicable to Aircraft Coded (MD) 343
Refueling System - Applicable to Aircraft Coded (HD) 344
Refueling System - Applicable to Aircraft Coded (ME) 348
Feed System - Applicable to Aircraft Coded (ET) 354
Feed System - Applicable to Aircraft Coded (FR) 356
Valve Assembly, Wing Fuel Transfer Check RH 359
Wing Fuel Transfer Pump Assembly and Attaching Parts - Applicable to Aircraft Coded (ET) 360
Wing Fuel Transfer Pump Assembly and Attaching Parts - Applicable to Aircraft Coded (FR) 362
Wing Drain 363
Single Point Refuel and Defuel Unit Receptacle Assembly 364
Filter Assembly and Attaching Parts 366
Dump System 368
Wing Fuel Dump Control (See Surface and Secondary Controls)
Forward and Aft Fuel Cell Assembly 372
Forward Fuselage Fuel Cell Liners 374
Aft Fuselage Fuel Cell Liners 376

Drop Tank
200 Gallon Underwing Drop Tank Assembly 378
200 Gallon Type II Underwing Fuel Tank Center Fairing Assembly 380
Forward, Center and Aft Fuel Drop Tank Sections 382
200 Gallon Type II Underwing Fuel Tank Fairing and Attaching Fittings 384

Refueling Probe
Buddy Tank Refueling Package 387
Inflight Refueling Probe - Applicable to Aircraft Coded (B) 388

HYDRAULIC SYSTEM

Flight Control System

No. 1 Flight Control and Emergency System - Applicable to Aircraft Coded (ET) 393
No. 1 Flight Control and Rudder Boost System - Applicable to Aircraft Coded (FR) 394
No. 1 Flight Control System Equipment and Emergency Pump Assembly 400
No. 2 Flight Control and Emergency System 404
No. 2 Flight Control System Equipment - Applicable to Aircraft Coded (BJ) 410
No. 2 Emergency Flight Control System Equipment - Applicable to Aircraft Coded (BK) 416
No. 1 and No. 2 Flight Control Aileron Actuator Assembly 422
Wing Flap Spoiler System - Applicable to Aircraft Coded (FR) 424
No. 1 and No. 2 Flight Control Reservoir Assembly 426
No. 1 and No. 2 Flight Control Stabilizer Actuator Assembly 428
No. 1 and No. 2 Flight Control Accumulator Assembly 430
No. 1 and No. 2 Flight Control Manifold Support Assembly - Applicable to Aircraft Coded (ET) 432
Spoiler Actuator Assembly - Applicable to Aircraft Coded (FR) 452

Utility System

Utility System Lines and Equipment - Applicable to Aircraft Coded (FR) 437
Utility System Lines and Equipment - Applicable to Aircraft Coded (ET) 438
Utility System Fittings and Pump Assembly - Applicable to Aircraft Coded (ET) 447
Utility System Fittings and Pump Assembly - Applicable to Aircraft Coded (FR) 448
Utility System Reservoir Pressurization Valve Equipment Assembly 454
Utility System Reservoir Assembly 456

Landing Gear

Landing Gear Down and Downlock System 458
Landing Gear Up and Uplock System 462
Fairing Door Open and Unlock System 464
Fairing Door Close and Lock System 468
Main Landing Gear Actuating Cylinder Assembly 470
Main Landing Gear Strut Fairing Door Cylinder Assembly 471
Main Landing Gear Wheel Door Uplock Cylinder Assembly 472
Main Landing Gear Fairing Door Manifold Assembly 473
Nose Landing Gear Operating Cylinder Assembly 474
Emergency Nose Gear System 476
Emergency Nose Landing Gear Selector Valve Assembly 479
Emergency Nose Landing Gear Down Accumulator and Accumulator Recharge Panel Assembly 480
Landing Gear Emergency Release Control (See Surface and Secondary Controls)

Speed Brake

Speed Brake System - Applicable to Aircraft Coded (ET) 482
Speed Brake System - Applicable to Aircraft Coded (FR) 484
Aft Speed Brake Servo Valve - Applicable to Aircraft Coded (FR) 487
Speed Brake Actuating Cylinder Assembly 489

TABLE OF CONTENTS (Cont)

PAGE

Speed Brake (Cont)
Aft Speed Brake Actuating Cylinder - Applicable to Aircraft Coded (FR) ---- 490
Speed Brake Dump Controls (See Surface and Secondary Controls)

Gun Bay Purge

Gun Bay Purge System - Applicable to Aircraft Coded (BJ) ---- 492
Gun Bay Purge System - Applicable to Aircraft Coded (BK) ---- 494
Gun Bay Purge Door Operating Cylinder Assembly ---- 497
Gun Bay Purge Exit Door Cylinder Assembly ---- 498

Arresting Gear

Arresting Gear Hydraulic System ---- 499

Wheel Brake

Wheel Brake System ---- 500

Wingfold

Wingfold and Spread System - Applicable to Aircraft Coded (ET) ---- 509
Wingfold and Spread System - Applicable to Aircraft Coded (FR) ---- 510
Wingfold Actuating Cylinder Assembly - Applicable to Aircraft Coded (AW) ---- 513
Wingfold Actuating Actuator Cylinder Assembly - Applicable to Aircraft Coded (AW) ---- 514
Wingfold Locking Cylinder Assembly ---- 515
Hydraulic System Filter ---- 516

Gun Compressor System

Gun Compressor System ---- 517

SURFACE AND SECONDARY CONTROLS

Surface Controls

Outboard Wing Droop Leading Edge Stop Assemblies and Fittings ---- 520
Outboard Wing Droop Leading Edge Mechanism and Support - Applicable to Aircraft Coded (ET) ---- 522
Outboard Wing Droop Leading Edge Mechanism and Support - Applicable to Aircraft Coded (FR) ---- 526
Aileron Trim and Lowering Mechanism - Applicable to Aircraft Coded (ET) ---- 530
Aileron Trim and Flap Spoiler Control Mechanism (Fuselage Section) - Applicable to Aircraft Coded (FR) ---- 532
Wing Flap Spoilers Control Mechanism (Wing Section) - Applicable to Aircraft Coded (FR) (Sheet 1) ---- 536
Wing Flap Spoilers Control Mechanism (Wing Section) - Applicable to Aircraft Coded (FR) (Sheet 2) ---- 537
Horizontal Stabilizer Control Feel Bungee ---- 541
Inboard Wing Droop Leading Edge and Flap Mechanism ---- 542
Pilots Complete Control Stick Assembly ---- 544
Aileron Control (Sheet 1) ---- 546
Aileron Control (Sheet 2) ---- 547
Horizontal Stabilizer Control Forward Fuselage (Sta 0 to 236.25) ---- 552
Horizontal Stabilizer Control Aft Fuselage (Sta 236.25 to 429) - Applicable to Aircraft Coded (ET) (Sheet 1) ---- 554
Horizontal Stabilizer Control Aft Fuselage (Sta 236.25 to 429) - Applicable to Aircraft Coded (ET) (Sheet 2) ---- 555
Horizontal Stabilizer Control Aft Fuselage (Sta 236.25 to 429) - Applicable to Aircraft Coded (FR) (Sheet 1) ---- 560
Horizontal Stabilizer Control Aft Fuselage (Sta 236.25 to 429) - Applicable to Aircraft Coded (FR) (Sheet 2) ---- 561
Rudder Control Forward Fuselage (Sta 0 to 236.25) - Applicable to Aircraft Coded (Y) (Sheet 1) ---- 566
Rudder Control Forward Fuselage (Sta 0 to 236.25) - Applicable to Aircraft Coded (Y) (Sheet 2) ---- 567
Rudder Control Forward Fuselage (Sta 0 to 236.25) - Applicable to Aircraft Coded (Z) (Sheet 1) ---- 572
Rudder Control Forward Fuselage (Sta 0 to 236.25) - Applicable to Aircraft Coded (Z) (Sheet 2) ---- 573
Rudder Pedal Assembly ---- 575
Rudder Lock Assembly ---- 577
Rudder Control Aft Fuselage (Sta 236.25 to 429) - Applicable to Aircraft Coded (ET) ---- 578
Rudder Control Aft Fuselage (Sta 236.25 to 429) - Applicable to Aircraft Coded (FR) (Sheet 1) ---- 582
Rudder Control Aft Fuselage (Sta 236.25 to 429) - Applicable to Aircraft Coded (FR) (Sheet 2) ---- 583
Rudder Trim Actuators ---- 585
Rudder, Stabilizer and Aileron Bellcrank and Sector Assembly ---- 586
RH Rudder and Stabilizer Bellcrank and Sector Assembly ---- 588

Secondary Controls

Wingfold Lock and Flag Control Mechanism ---- 590
Aileron Control Centering Mechanism and Drive Assembly ---- 593
Wing Fuel Dump Control ---- 594
Special Stores and Drop Tank Release Control ---- 600
Speed Brake Hydraulic Dump Control - Applicable to Aircraft Coded (ET) ---- 604
Speed Brake Hydraulic Dump Control - Applicable to Aircraft Coded (FR) (Sheet 1) ---- 606
Speed Brake Hydraulic Dump Control - Applicable to Aircraft Coded (FR) (Sheet 2) ---- 607
Speed Brake Hydraulic Dump Control Actuating Knob and Cable Bellcrank Support Assembly ---- 612
Landing Gear Emergency Release Control (Sheet 1) ---- 614
Landing Gear Emergency Release Control (Sheet 2) ---- 615
Landing Gear Emergency Release Bracket Assembly and Fuselage Station 71.75 Pulleys ---- 620
Bungee Assembly Aft Fuselage Brake - Applicable to Aircraft Coded (FR) ---- 622
Arresting Gear Control ---- 624
Engine Control and Power Quadrant ---- 628

TABLE OF CONTENTS (Cont)

PAGE

Secondary Controls (Cont)
Ram-Air Turbine Release Controls - Applicable to Aircraft Coded (BK) (Sheet 1) ---- 630
Ram-Air Turbine Release Controls - Applicable to Aircraft Coded (BK) (Sheet 2) ---- 631
Ram-Air Turbine Bungee Assembly - Applicable to Aircraft Coded (BK) ---- 634

COCKPIT PANEL ARRANGEMENT

Cockpit Panel Arrangement - Applicable to Aircraft Coded (ET) ---- 636
Cockpit Panel Arrangement - Applicable to Aircraft Coded (FR) ---- 638

RADIO AND RADAR

AN/ARC-27A Command and AN/ARA-25 ADF Equipment ---- 640
AN/ARN-14E Navigational Set Equipment ---- 644
AN/ARN-21 Navigational Equipment ---- 646
AN/APX-6B IFF and AN/APA-89 SIF Equipment ---- 648
MK-16 Mod-1 AFCS and AN/APG-30A Gun Ranging Radar Equipment ---- 650
Radar Test Receptacle and Fuse Panel Assembly ---- 653

ELECTRICAL AND INSTRUMENT

AC Power and Distribution System - Applicable to Aircraft Coded (ET) ---- 654
AC Power and Distribution System - Applicable to Aircraft Coded (FR) ---- 656
Air Compressor - Applicable to Aircraft Coded (EK) ---- 658
Air Compressor - Applicable to Aircraft Coded (AD) ---- 660
Airspeed Pitot-Static System ---- 665
Aft Fuel Tank Float Level System - Applicable to Aircraft Coded (ME) ---- 666
Angle of Attack and Yaw System ---- 668
Ammo Booster ---- 670
Anti "G" Suit and Turn and Bank Systems ---- 672
Approach Light System ---- 674
Arresting Gear ---- 676
Bomb and Rocket System Permanent Provisions - Applicable to Aircraft Coded (ET) ---- 679
Bomb and Rocket System Permanent Provisions - Applicable to Aircraft Coded (FR) ---- 680
Bomb and Rocket System Package - Applicable to Aircraft Coded (ET) ---- 682
Buddy Tank System Permanent Provisions - Applicable to Aircraft Coded (FR) ---- 684
Canopy Actuator ---- 686
Cockpit Air Conditioning, Defrost and Anti-ice System ---- 688
Cockpit Pressurization ---- 690
Console and Instrument Lights ---- 692
Counter-Pointer Altimeter ---- 692B
DC Power Distribution System - Applicable to Aircraft Coded (ET) ---- 694
DC Power Distribution System - Applicable to Aircraft Coded (FR) ---- 700
Dual Level Float Test - Applicable to Aircraft Coded (NH) ---- 704
Dual Level Float Test - Applicable to Aircraft Coded (ME) ---- 705
Emergency Flight Control - Applicable to Aircraft Coded (BJ) ---- 706
Engine Tachometer Indicator ---- 707
Exhaust Temperature Indicating System ---- 708
Exterior Lighting ---- 710
Fire Detector System ---- 712
Flap and Droop Actuators - Applicable to Aircraft Coded (ET) ---- 714
Flap and Droop Actuators - Applicable to Aircraft Coded (FR) ---- 716
Flight Control Pressure Warning System ---- 718
Fuel Boost Pump ---- 719
Fuel Quantity Indicating System ---- 720
Fuel Flow Indicating System and Instrument Transformer ---- 725
Fuel Transfer, Fuel and Defuel Control - Applicable to Aircraft Coded (ET) ---- 726
Fuel Transfer, Fuel and Defuel Control - Applicable to Aircraft Coded (FR) ---- 728
Gun Firing System ---- 730
Gyro Horizon Indicator - Applicable to Aircraft Coded (Y) ---- 733
Gyro Horizon Indicator - Applicable to Aircraft Coded (Z) ---- 734
Gun Camera ---- 735
Hydraulic Pressure Indicating System ---- 736
Instrument Lights and Cockpit Floodlights ---- 738
Instrument Panel Vibrator ---- 741
Inverter Failure Warning ---- 742
Landing Gear Sequencing System (Sheet 1) ---- 745
Landing Gear Sequencing System (Sheet 2) ---- 746
Landing Gear Warning and Indicating System ---- 750
Landing Light ---- 753
Liquid Oxygen Quantity Indicating System - Applicable to Aircraft Coded (BS) ---- 754
Low Altitude Bombing System Permanent Provisions - Applicable to Aircraft Coded (ET) ---- 755
Electrical Provisions Package for External Stores - Applicable to Aircraft Coded (ET) ---- 756
Low Altitude Bombing System Permanent Provisions - Applicable to Aircraft Coded (FR) ---- 759
LABS Aero 18C Adjusting Panel Assembly and Mounting Equipment - Applicable to Aircraft Coded (FR) ---- 760
Manual Fuel Control ---- 763
Missile System Permanent Provisions - Applicable to Aircraft Coded (KY) ---- 764
Bullpup Control Pod Electrical Equipment - Applicable to Aircraft Coded (KY) ---- 764B
Electrical Bullpup Guidance Relay Box Assemblies - Applicable to Aircraft Coded (KY) ---- 764D
Normal and Alternate Trim - Applicable to Aircraft Coded (ET) ---- 768
Normal and Alternate Trim - Applicable to Aircraft Coded (FR) ---- 770
Pilots Seat Actuator and Reel ---- 773
Oil Pressure Indicating System ---- 774

TABLE OF CONTENTS (Cont)

ELECTRICAL AND INSTRUMENT (Cont) PAGE
Pilots Instrument Panel Frame Assembly ---- 776
Pitot Heater ---- 778
Polar Path Compass ---- 779
Stall Warning ---- 781
Speed Brake ---- 782
Starting and DC Generating and Emergency Ignition Systems ---- 784
Statistical Accelerometer ---- 787
Stores and Tank Jettison - Applicable to Aircraft Coded (ET) ---- 788
Stores and Tank Jettison - Applicable to Aircraft Coded (FR) ---- 788A
T-208 System Permanent Provisions - Applicable to Aircraft Coded (ET) ---- 790
T-208A System Package - Applicable to Aircraft Coded (ET) ---- 792
Spray Tank Provision Package - Applicable to Aircraft Coded (FR) ---- 792B
T-208A/T-249 Pylon Fuse and Relay Box and MK-12 Store Aft Fairing Assy (LH) - Applicable to Aircraft Coded (FR) ---- 794
T-208A/T-249 Fuse and Relay Box and MK-12 Store Aft Fairing Assembly - Applicable to Aircraft Coded (FR) ---- 794A
T-208/T-249 System - Applicable to Aircraft Coded (FR) ---- 796
Electrical Bomb Fuzing Package - Applicable to Aircraft Coded (FR) ---- 796B
MK-7 Pylon Fuse and Relay Panel Assembly - Applicable to Aircraft Coded (FR) ---- 798
MK-7 Pylon Electrical Equipment Assembly - Applicable to Aircraft Coded (FR) ---- 800
Warning Light Dimming System ---- 801
Warning Light Test Switch ---- 803
Windshield Overheat Warning ---- 804
Wing Tank Fuel Dump - Applicable to Aircraft Coded (ET) ---- 805
Wingfold ---- 806
Yaw Damper - Applicable to Aircraft Coded (ET) ---- 808
Yaw Damper - Applicable to Aircraft Coded (FR) ---- 809
Center Pedestal Shield Assembly ---- 810
Heat and Vent Control Console and Station 227.5 Circuit Breaker Panel Assemblies ---- 813
Power Distribution Relay Panel Assembly - Applicable to Aircraft Coded (ET) ---- 814
Power Distribution Relay Panel Assembly - Applicable to Aircraft Coded (FR) ---- 816
Canopy Deck Relay and Electrical Test Switch Panel Assemblies ---- 818
LH Forward Console Assembly - Applicable to Aircraft Coded (ET) ---- 820
LH Forward Console Assembly - Applicable to Aircraft Coded (FR) ---- 822
LH Rear Console Panel Assembly ---- 824
Station 156 LH Side Circuit Breaker Panel Assembly Complete - Applicable to Aircraft Coded (ET) ---- 826
Station 156 LH Side Circuit Breaker Panel Assembly - Applicable to Aircraft Coded (FR) ---- 828
RH Forward Console Assembly - Applicable to Aircraft Coded (ET) ---- 832
RH Forward Console Assembly - Applicable to Aircraft Coded (FR) ---- 834
LH Radar Bay Panel Assembly ---- 837
RH Radio Compartment Electrical Junction Box and Cover - Applicable to Aircraft Coded (ET) ---- 838
RH Radio Compartment Electrical Junction Box and Cover - Applicable to Aircraft Coded (FR) ---- 840
Pilots RH Rear Console Panel Assembly ---- 842
Gun Firing Unit - Applicable to Aircraft Coded (NH) ---- 844
Gun Firing Unit - Applicable to Aircraft Coded (ME) ---- 846
Emergency Fuel Transfer Control Panel Assembly ---- 847
RH Rear Cockpit Circuit Breaker and Fuse Panel Assembly - Applicable to Aircraft Coded (ET) (Sheet 1) ---- 848
RH Rear Cockpit Circuit Breaker and Fuse Panel Assembly - Applicable to Aircraft Coded (ET) (Sheet 2) ---- 849
Pilots Instrument Panel Assembly - Applicable to Aircraft Coded (ET) (Sheet 1) ---- 852
Pilots Instrument Panel Assembly - Applicable to Aircraft Coded (ET) (Sheet 2) ---- 853
Main Landing Gear Strut Door Lock and Closed Indicating Switch and Emergency Release Mechanism ---- 858
Pilots Instrument Panel Rear Equipment - Applicable to Aircraft Coded (ET) ---- 860
Pilots Instrument Panel Assembly - Applicable to Aircraft Coded (FR) ---- 862
RH Rear Cockpit Circuit Breaker and Fuse Panel Assembly - Applicable to Aircraft Coded (FR) ---- 866

ARMAMENT
Pneumatic Gun Charging Lines and Equipment ---- 870
Pneumatic Gun Charging Equipment at Compressor and Storage Bottle Bay ---- 872
Pneumatic Gun Charging System (3000 PSI) - Applicable to Aircraft Coded (AD) ---- 876
Pneumatic Compressor and Equipment (3000 PSI) - Applicable to Aircraft Coded (AD) ---- 882
Pneumatic System LH Gun Charger Filter and Pressure Regulator (3000 PSI) - Applicable to Aircraft Coded (AD) ---- 884
Pneumatic Equipment Assembly RH Gun Charger Filter and Pressure Regulator (3000 PSI) - Applicable to Aircraft Coded (AD) ---- 885
Pneumatic Equipment Assembly RH Pressure Relief and Check Valve (3000 PSI) - Applicable to Aircraft Coded (AD) ---- 886
Pneumatic Power Circuit Overboard Dump and Shuttle Valve Assemblies and Fittings - Applicable to Aircraft Coded (AD) ---- 887
20MM Guns and Boresight Equipment ---- 888
Gun Muzzle Stabilizer ---- 891
MK-8 Mod 8 Sight Head and AN-N-6A Camera Equipment ---- 892
20MM Gun Mount Supports, Ammo Cans and Booster Motors ---- 894
Ammo Case and Link Compartment Liners Fuselage Station 71.75 to Station 106.875 ---- 898
External Stores Pylon at BL 105 (1200 Pound) - Applicable to Aircraft Coded (ET) ---- 902
External Stores Provision Packages at BL 105 - Applicable to Aircraft Coded (FR) ---- 911
External Stores MK-7 Pylon Package and Rack at BL 105 LH - Applicable to Aircraft Coded (FR) ---- 912
Pylon Mechanical Release Mechanism Assembly at BL 105 - Applicable to Aircraft Coded (ET) ---- 914A
External Stores Provision Packages - Applicable to Sidewinder Configuration ---- 914B
External Stores Provision Packages at BL 153 ---- 916
External Stores Pylon at BL 105 - Applicable to Aircraft Coded (ET) ---- 918
External Stores Pylon at BL 105 - Applicable to Aircraft Coded (FR) ---- 922
External Stores Pylon at BL 48 - Applicable to Aircraft Coded (FR) ---- 924
200 Gallon Fuel Tank Pylon Rear Post Release BL 105 ---- 926
External Stores Cable Stowage Fairing and Mounting Point Plugs ---- 928B
Bullpup External Stores Provision Package at BL 153 - Applicable to Aircraft Coded (KY) ---- 930
Missile Pylon and Adapter Combination at BL 153 - Applicable to Aircraft Coded (KY) ---- 932
Missile Pylon and Adapter Combination at BL 105 - Applicable to Aircraft Coded (KY) ---- 934
Bullpup External Stores Provision Package at BL 105 - Applicable to Aircraft Coded (KY) ---- 934B
Missile Pylon and Adapter Combination at BL 48 LH - Applicable to Aircraft Coded (KY) ---- 936
Bullpup External Stores Provision Package at BL 48 LH - Applicable to Aircraft Coded (KY) ---- 938

TABLE OF CONTENTS (Cont)

ARMAMENT (Cont) PAGE
External Stores MK-7 Pylon at BL 105 LH - Applicable to Aircraft Coded (FR) 940
Aero 1A 150 Gallon Fuel Tank Pylon at BL 153 - Applicable to Aircraft Coded (FR) 942

HEAT AND VENT SYSTEM

Windshield Anti-ice Canopy Defrost and Cockpit Air Pressure Regulator Equipment 949
Engine Section Exchanger, Refrigeration and Cockpit Heat and Vent Equipment 950

OXYGEN SYSTEM

Liquid Oxygen - Applicable to Aircraft Coded (BS) 956
Liquid Oxygen Quick Disconnect 70 PSI Nominal Pressure Couplings 956B
Gaseous Oxygen - Applicable to Aircraft Coded (BR) 958
Liquid Oxygen Container and Filler Valve - Applicable to Aircraft Coded (BS) 960

POWER PLANT

*Engine and Accessories Assembly 962
Engine Equipment 972

SPARES

Spare Outboard Wing, Inboard Wing and Inboard Wing Root Leading Edge Assemblies 974
Spare Aft Section Fuselage Assembly 980
Spare Vertical Stabilizer and Rudder Trim Tab Assembly 986

SPECIAL TOOLS, GROUND HANDLING AND LOOSE EQUIPMENT

Towbar Assembly 987
Wingfold Jury Strut 988
Engine Handling Adapter Assembly - Applicable to Lockheed Dolly 408600 990
Engine Handling Adapter Assembly - Applicable to Air Logistics Dolly 4000A 992B
Aft Fuselage Adapter Assembly - Applicable to Lockheed Dolly 408600 994
Engine Handling Adapter Assembly - Applicable to Air Logistics Dolly 4000A 996
Aft Fuselage Handling Adapter Assembly - Applicable to Air Logistics Dolly 4000A 998
Wing to Fuselage Mating Fixture Assembly 1000
Loose Equipment, Special Tools and Ground Handling Equipment List 1003

QUICK ENGINE CHANGE ASSEMBLY (Q. E. C. A.)

Q. E. C. A. List 1013

QUICK ENGINE CHANGE KIT (Q. E. C. K.)

Q. E. C. K. List 1022

NUMERICAL INDEX 1029

*NOTE: Contains Q. E. C. A. For Explanation and List Refer to Page 1013.

Vendors Code

Federal Supply Code For Mfrs.	Navy Alpha-betical Code	Manufacturer
		A
83865	AAMP	A. A. METAL PRODUCTS, INC. 15105 South Broadway Gardena, California
82829	AAPR	ALLEN AIRCRAFT PRODUCTS, INC. COTTON CORNERS PLANT Ravenna, Ohio
01976	ACA	AMERICAN CHAIN AND CABLE CORPORATION Bridgeport 2, Connecticut
70119	ADE	ADVANCE ELECTRIC AND RELAY COMPANY DIVISION OF ELGIN INSTRUMENT CO. 2435 North Naomi Street Burbank, California
96124	AEDS	ACCESSORY PRODUCTS CORPORATION Now ACCESSORY PRODUCTS DIVISION OF TEXTRON, INC. 616 West Whittier Boulevard Whittier, California
00656	AEV	AEROVOX CORPORATION 740 Belleville Avenue New Bedford, Massachusetts
91767	AF	HELI-COIL CORPORATION Subsidiary of TOPP INDUSTRIES, INC. 954 Shelter Rock Lane Danbury, Connecticut
99193	AIR	AIRESEARCH MANUFACTURING COMPANY DIVISION OF GARRETT CORPORATION 402 South 36th Street Phoenix, Arizona
80006	AITR	AIRTRON, INCORPORATED 1011 West Elizabeth Avenue Linden, New Jersey
95879	AL	ALEMITE DIVISION STEWART WARNER CORPORATION 1828 W. Diversey Boulevard Chicago, Illinois
70510	AMK	AMERICAN METAL HOSE BRANCH AMERICAN BRASS COMPANY 414 Meadow Street Waterbury, Connecticut
83040	AMLP	AMERICAN LATEX PRODUCTS CORP. 3341 West El Segundo Boulevard Hawthorne, California
02660	AMP	AMERICAN PNENOLIC CORPORATION Now AMPHENOL ELECTRONICS CORP. 1830 South 54th Avenue Chicago, Illinois
80411	AOE	ACRO MANUFACTURING COMPANY 2040 East Main Street Columbus, Ohio
00502	AP	ADEL PRECISION PRODUCTS 10777 Vanowen Street Burbank, California
00624	AQ	AEROQUIP CORPORATION 303 South East Avenue Jackson, Michigan
00672	ALMA	ALTAIR, INCORPORATED 50 St. McQuesten Parkway Mount Vernon, New York
70436	ARN	ARENS CONTROLS, INCORPORATED 2017 Greenleaf Street Evanston, Illinois
03990	ARO	THE ARO EQUIPMENT CORPORATION Bryan, Ohio
91499	ARW	ARROWHEAD PRODUCTS Subsidiary of FEDERAL MOGUL-BOWER BEARINGS, INC. 2300 Curry Street Long Beach 5, California
02860	ASE	AMERICAN SEATING COMPANY 901 Broadway North West Grand Rapids 2, Michigan
02964	ASG	AMERICAN STERILIZER COMPANY Erie, Pennsylvania
84256	AVDE	AVIATION DEVELOPMENT, INC. 210 South Victory Boulevard Burbank, California
96124		ACCESSORY PRODUCTS DIVISION OF TEXTRON, INC. Formerly ACCESSORY PRODUCTS CORP. 616 West Whittier Boulevard Whittier, California
83930		ADEL DIVISION GENERAL METALS CORP. Successor to HUNTINGTON PRECISION PRODUCTS CORP. Huntington, West Virginia
98403		AGA DIVISION ELASTIC STOP NUT CORP. Formerly AGASTAT DIVISION AMERICAN GAS ACCUMULATOR CO. 1027 Newark Avenue Elizabeth, New Jersey
98872		AERO-TUBE Gowanda, New York

Federal Supply Code For Mfrs.	Navy Alpha-betical Code	Manufacturer
70382		AGASTAT DIVISION AMERICAN GAS ACCUMULATOR CO. Now AGA DIVISION ELASTIC STOP NUT CORPORATION 1027 Newark Avenue Elizabeth, New Jersey
01413		AIR LOGISTICS CORPORATION Successor to HAMMOND MFG. CO. 3600 East Foothill Boulevard Pasadena, California
88042		AIR FORCE DRAWINGS
04795		AIRSUPPLY COMPANY DIVISION OF GARRETT CORP. 9815 Wilshire Boulevard Beverly Hills, California
02660		AMPHENOL ELECTRONICS CORP. Formerly AMERICAN PHENOLIC CORP. 1830 South 54th Avenue Chicago, Illinois
97602		ARMAMENT COMPONENTS, INC. Formerly WEST COAST TOOL AND SUPPLY CO. 1224 East Delhi Road Santa Ana, California
		B
06004	BA	BASSICK COMPANY 437 Howard Avenue Bridgeport, Connecticut
83298	BARB	BENDIX RED BANK DIVISION BENDIX AVIATION CORPORATION Route 35 Red Bank (Eatontown), New Jersey
05624	BCC	BARBER-COLMAN COMPANY 1250 Rock Street Rockford, Illinois
70709	BCO	BARCO MANUFACTURING COMPANY 500-530 North Hough Street Barrington, Illinois
70892	BDC	BEAD CHAIN MANUFACTURING CO. 64 Mt. Grove Street Bridgeport, Connecticut
81860	BLC	BARRY CORPORATION 785 Pleasant Street Watertown 72, Massachusetts
80792	BRAY	BRAY OPTICAL COMPANY 3445 West First Street Los Angeles 4, California
82106	BTP	BERTEA PRODUCTS 1450 North Lake Avenue Pasadena, California
71243	BUR	BURKLYN MANUFACTURING COMPANY 3429 Glendale Boulevard Los Angeles 39, California
71400	BUS	BUSSMANN MANUFACTURING COMPANY Now BUSSMANN FUSE DIVISION OF McGRAW-EDISON CO. 2538 West University Street St. Louis 3, Missouri
92830	BWA	WALLACE BARNES COMPANY DIVISION ASSOCIATED SPRING CORPORATION Bristol, Connecticut
82912	BWSG	B. W. SUPERCHARGER, INC. Successor to McCULLOCH ENGINEERING COMPANY Milwaukee, Wisconsin
02987		BENDIX MONTROSE DIVISION BENDIX AVIATION CORPORATION South Montrose, Pennsylvania
99251		PIONEER CENTRAL DIVISION BENDIX AVIATION CORPORATION Davenport, Iowa
90005		BENDIX SKINNER DIVISION BENDIX AVIATION CORPORATION P. O. Box 135 Royal Oak, Michigan
98656		BENTON CORPORATION 6531 Russell Street Detroit 11, Michigan
89488		BOBRICK MANUFACTURING CORPORATION New York, New York Branch of BOBRICK MANUFACTURING CORPORATION Los Angeles, California
98940		BOHANAN MANUFACTURING COMPANY 2125 Stoner Avenue W. Los Angeles 25, California
74480		BUFFALO HYDRAULICS DIVISION HOUDAILLE INDUSTRIES, INC. Formerly HOUDE ENGINEERING DIV. HOUDAILLE-HERSHEY CORP. 537 East Delaware Avenue Buffalo 11, New York
71400		BUSSMANN FUSE DIVISION OF McGRAW-EDISON COMPANY Formerly BUSSMANN MFG. CO. 2538 West University Street St. Louis 3, Missouri
		C
86090	CAJC	CARTER, J. C. COMPANY 671 West 17th Street Costa Mesa, California
81839	CARM	CARMA MANUFACTURING COMPANY 1879 Millin Avenue Torrance, California
71468	CED	CANNON ELECTRIC COMPANY 3209 Humboldt Street Los Angeles, California

Federal Supply Code For Mfrs.	Navy Alpha-betical Code	Manufacturer
84617	GLT	G AND L TOOL COMPANY Philadelphia, Pennsylvania
72914	GMC	GRIMES MANUFACTURING COMPANY 515 North Russell Street Urbana, Ohio
73949	GN	GUARDIAN ELECTRIC MFG. COMPANY 1621 West Walnut Street Chicago 12, Illinois
24988	GPC	GLADDEN PRODUCTS CORPORATION 635 West Colorado Boulevard Glendale 4, California
73957	GVP	GROOV-PIN CORPORATION 1125 Hendricks Causeway Ridgefield, New Jersey
73842 25500	GY	GOODYEAR TIRE AND RUBBER CO. 1144 East Market Street Akron 16, Ohio
88422		GENERAL ELECTRIC COMPANY GENERAL PURPOSE COMPONENT MOTOR DEPARTMENT OF COMPONENT PRODUCTS DIVISION OF INDUSTRIAL COMPONENTS AND MATERIALS GROUP Fort Wayne, Indiana
98863		GENERAL ELECTRIC COMPANY MEASUREMENTS AND INDUSTRIAL PRODUCTS DIVISION OF INDUSTRIAL COMPONENTS AND MATERIALS GROUP Schenectady, New York
03512		GENERAL ELECTRIC COMPANY SPECIALTY TRANSFORMER DEPARTMENT OF COMPONENT PRODUCTS DIVISION OF INDUSTRIAL COMPONENTS AND MATERIALS GROUP 3606 South Calhoun Street Fort Wayne 6, Indiana
		GRAY AND HULEGUARD, INC. 930 North Hancock Avenue Los Angeles 46, California

H

Federal Supply Code For Mfrs.	Navy Alpha-betical Code	Manufacturer
27222	HBB	HARBOR BOAT BUILDING COMPANY Terminal Island, California
98138	HBDI	HARLEY BUCKLE DIVISION SEMBODJA CORPORATION Dayton, Ohio
74480	HD	HOUDE ENGINEERING DIVISION HOUDAILLE-HERSHEY CORPORATION Now BUFFALO HYDRAULICS DIVISION HOUDAILLE INDUSTRIES, INC. 537 East Delaware Avenue Buffalo 11, New York
73134	HEC	HEIM COMPANY 46 Sanford Street Fairfield, Connecticut
94640	HEGE	HENRY ENGINEERING COMPANY 3625 West Pacific Avenue Burbank, California
74063	HEM	HARTMAN ELECTRICAL MFG. COMPANY 175 North Diamond Street Mansfield, Ohio
73197	HS	HI-SHEAR RIVET TOOL COMPANY 2600 West 247th Street Torrance, California
97613	HLF	KAHR BEARING DIVISION AETNA STEEL PRODUCTS CORPORATION 812 South Flower Street Burbank, California
84723	HMDC	HAMMOND MANUFACTURING COMPANY Succeeded by AIRLOGISTICS CORP. 3600 East Foothill Boulevard Pasadena, California
81982	HOA	HYDRO-AIRE, INC. 3000 Winona Avenue Burbank, California
29500	HOH	HOUDAILLE INDUSTRIES, INC. 537 East Delaware Avenue Buffalo 11, New York
81817	HOOV	HOOVER ELECTRIC COMPANY 2100 South Stoner Avenue Los Angeles 25, California
77138	HPL	PAUL HENRY, INC. New York, New York
73302	HPP	HUNTINGTON PRECISION PRODUCTS CORP. Succeeded by ADEL DIVISION GENERAL METALS CORPORATION Huntington, West Virginia
01146	HRAJ	HARRIS MANUFACTURING COMPANY 8031 Litzinger Road St. Louis, Missouri
73030	HS	HAMILTON STANDARD DIVISION OF UNITED AIRCRAFT CORPORATION Windsor Locks, Connecticut
83115	HTEC	HARDMAN TOOL AND ENGINEERING CORP. 1845 South Bundy Drive Los Angeles, California
92543	HUEN	HUBER INDUSTRIES, INCORPORATED HUBER ENGINEERING COMPANY 4960 Hillside Avenue Cincinnati 33, Ohio

Federal Supply Code For Mfrs.	Navy Alpha-betical Code	Manufacturer
82577	HUG	HUGHES AIRCRAFT COMPANY Culver City, California
83014	HWL	HARTWELL AVIATION SUPPLY CO. 9035 Venice Boulevard Los Angeles 34, California
82227	HYAW	HAYDON, A. W. COMPANY DIVISION OF CONSOLIDATED ELECTRONICS INDUSTRIES CORP. 232 North Elm Street Waterbury 20, Connecticut
84685	HYDP	HYDRA POWER CORPORATION 10-12 Pine Court New Rochelle, New York
81873	HYRM	HYDRAULIC RESEARCH AND MFG. CO. 2835 North Naomi Street Burbank, California
00851		HARLEY PATENTS, INCORPORATED 607 Fifth Avenue New York, New York
73249		HOOD RUBBER DIVISION B. F. GOODRICH COMPANY Successor to B. F. GOODRICH COMPANY Watertown, Massachusetts
		I
81030	ININ	INTERNATIONAL INSTRUMENTS, INC. P. O. Box 2954 New Haven, Connecticut
75042	IRC	INTERNATIONAL RESISTANCE COMPANY 401 North Broad Street Philadelphia 8, Pennsylvania
81483	ITRC	INTERNATIONAL RECTIFIER CORPORATION 1521 East Grand Avenue El Segundo, California
		J
91816	JAPC	JAMES-POND-CLARK, INCORPORATED 2181 East Foothill Boulevard Pasadena 8, California
31435	JH	JACK AND HEINTZ, INC. 17600 Broadway Cleveland 1, Ohio
75165	JM	JOHNS-MANVILLE CORPORATION 22 East 40th Street New York 16, New York
75007	JPN	JUNIPER AND NORRIS COMPANY Succeeded by JANCO CORPORATION 3111 Winona Avenue Burbank, California
91812		JANCO CORPORATION Successor to JUNIPER AND NORRIS CO. 3111 Winona Avenue Burbank, California
79387		JERVIS CORPORATION Grandville, Michigan
04665		K. W. JOHNSON AND COMPANY, INC. Dayton, Ohio
		K
83304	KAAG	KAUFFMAN LATTIMER COMPANY 263 North Front Street Columbus, Ohio
75345	KH	KIRKHILL RUBBER COMPANY 811 West 58th Street Los Angeles, California
75237	KNM	KAYNAR MANUFACTURING COMPANY 7875 Telegraph Road Rivera, California Mailing Address: P. O. Box 2001 Terminal Annex Los Angeles 54, California
89944	KO	KOLLSMAN INSTRUMENT CORPORATION Subsidiary of STANDARD COIL PRODUCTS CO., INC. 80-08 45th Avenue Elmhurst 73, New York
75361	KOE	KOEHLER AIRCRAFT PRODUCTS CO. Subsidiary of NEW BRITAIN MACHINE CO. 409 Leo Street Dayton, Ohio
81590	KOR	KORRY, BORE V., COMPANY 223 Eighth Avenue, North Seattle 9, Washington
75312	KWC	KEYSTONE WATCH CASE DIVISION OF RIVERSIDE ALLOY METAL DIVISION OF PORTER, H. K., CO., INC. OF DELAWARE Riverside, New Jersey
75287	KY	KENYON INSTRUMENT COMPANY, INC. 1345 New York Avenue Huntington Station Long Island, New York
		L
35351	LA	LEAR, INCORPORATED 110 Ionia Avenue, N.W. Grand Rapids 2, Michigan
91864	LADM	LEONARD, WALLACE O. INCORPORATED 373 South Fair Oaks Pasadena, California
35662	LEL	LELAND ELECTRIC COMPANY 1501 Webster Street Dayton 1, Ohio

Federal Supply Code For Mfrs.	Navy Alpha-betical Code	Manufacturer
35918	LEN	LEWIS ENGINEERING COMPANY 52 Rubber Avenue Naugatuck, Connecticut
81840	LGHI	LELAND, GEORGE H. INCORPORATED 123 Webster Street Dayton 3, Ohio
36659	LH	LOCKHEED AIRCRAFT CORPORATION 2555 North Hollywood Way Burbank, California
36536	LI	LIQUIDOMETER CORPORATION 41-03 36th Street Long Island City 1, New York
35344	LR	LEACH RELAY COMPANY 5915 Avalon Boulevard Los Angeles 3, California
00614		Division of LEACH CORPORATION Los Angeles, California
75915	LTF	LITTELFUSE, INCORPORATED 1865 Miner Street Des Plaines, Illinois
82833	LYQ	HANSEN-LYNN COMPANY, INC. 800 South Flower Street Burbank, California
01178		LOURDES HYDRAULICS, INCORPORATED Brooklyn, New York
		M
91927	MAFN	MICRO METAL PRODUCTS COMPANY 1281 Riverside Drive Los Angeles, California
91893	MAIV	MARION SCREW PRODUCTS Marion, Indiana
98625	MAR	MARMAN PRODUCTS COMPANY Subsidiary of AEROQUIP CORP. 11214 Exposition Boulevard Los Angeles 64, California
87034	MARI	MARCO INDUSTRIES COMPANY 207 South Helena Street Anaheim, California
39015	MAX	MAXSON, W. L. CORPORATION 475 10th Avenue New York 18, New York
91929	MCS	MICRO SWITCH DIVISION MINNEAPOLIS-HONEYWELL REGULATOR CO. 11 West Spring Street Freeport, Illinois
76296	MCU	McCULLOCH ENGINEERING COMPANY Succeeded by B. W. SUPERCHARGER, INC. Milwaukee, Wisconsin
76050	MCV	M. C. MANUFACTURING COMPANY 118 Indianwood Road Lake Orion, Michigan
76374	MEH	MECHANICAL PRODUCTS, INC. 1824 River Street Jackson, Michigan
82634	MGL	McGILL MANUFACTURING COMPANY, INC. 909 North Lafayette Valparaiso, Indiana
92563	MGLA	BEARINGS DIVISION McGILL MANUFACTURING COMPANY, INC. 909 North Lafayette Valparaiso, Indiana
94580	MHA	AERONAUTICAL DIVISION MINNEAPOLIS-HONEYWELL REGULATOR CO. 2600 Ridgeway Road Minneapolis, Minnesota
76534	MHSC	MUELHAUSEN SPRING CORPORATION 500 East Ottawa Street Logansport, Indiana
88525	MIM	MINNESOTA MINING AND MANUFACTURING CO. 8825 Grinnell Avenue Detroit, Michigan
76530	MKL	MONADNOCK MILLS DIVISION Subsidiary of UNITED CARR FASTENER CORP. 1977 First Avenue San Leandro, California
81579	MSE	MAYBAR CORPORATION 200 North Avenue Los Angeles 42, California
39661	MSO	MENASCO MANUFACTURING COMPANY 805 South San Fernando Boulevard Burbank, California
93724	MVEM	MAR VISTA ENGINEERING COMPANY 5420 West 104th Street Los Angeles 45, California
04253		MARTIN-BAKER AIRCRAFT COMPANY, LTD. Higher Dunham, Near Uxbridge, England
97557		MORTON MACHINE WORKS Millersburg, Pennsylvania
92310		W. I. MANN COMPANY Now TEXAS INSTRUMENTS, INC. OPTICS DIVISION 104 East Foothill Boulevard Monrovia, California
		N
89372	NA	NORTH AMERICAN AVIATION, INC. 4300 East Fifth Avenue Columbus 16, Ohio

Federal Supply Code For Mfrs.	Navy Alpha-betical Code	Manufacturer
88978	NAQ	NORTH AMERICAN PHILLIPS COMPANY, INC. MOUNT VERNON INSTRUMENTS DIVISION Succeeded by PHILLIPS ELECTRONICS, INC. Mt. Vernon, New York
93835	NAWL	NATIONAL WATERLIFT COMPANY 2220 Palmer Avenue Kalamazoo, Michigan
76793	NEN	NOBLES ENGINEERING AND MFG. CO. 645 East Seventh Street St. Paul 6, Minnesota
76786	NJ	NORTH AND JUDD MANUFACTURING COMPANY New Britain, Connecticut
76689	NSC	NATIONAL SCREW AND MFG. COMPANY 2440 East 75th Street Cleveland 4, Ohio
76691	NTS	NATIONAL TELEPHONE SUPPLY CO., INC. Cleveland, Ohio
94581	NUCA	NATIONAL UTILITIES CORPORATION 826 South Arroyo Parkway Pasadena 2, California
80539	NUS	NUTT-SHEL COMPANY 811 Airway Glendale 1, California
43491	NYB	NEW YORK AIR BRAKE COMPANY 230 Park Avenue New York 17, New York
98524		NATIONAL SCREW & MFG. CO. OF CALIFORNIA Los Angeles, California
03296		NYLON MOLDING CORPORATION Garwood, New Jersey
		O
81716	OAKA	OAK MANUFACTURING COMPANY 1260 Clybourn Avenue Chicago, Illinois
44655	OM	OHMITE MANUFACTURING COMPANY 3601 West Howard Street Skokie, Illinois
76908	OPS	OPERATING AND MAINTENANCE SPECIALTIES Charlotte, North Carolina
45225	OWT	OWATONNA TOOL COMPANY 450 North Cedar Street Owatonna, Minnesota
99537		OHIO FABRICATORS COMPANY Coshocton, Ohio
		P
45681	PA	PARKER APPLIANCE COMPANY Now PARKER-HANNIFIN CORP. 17325 Euclid Avenue Cleveland, Ohio
92003	PAET	PARKER AIRCRAFT COMPANY Subsidiary of PARKER-HANNIFIN CORP. 5728 West Century Boulevard Los Angeles 45, California
45598	PANT	PANTEX MANUFACTURING CORPORATION 531 Roosevelt Avenue P. O. Box 680 Pawtucket, Rhode Island
45402	PAS	PACIFIC SCIENTIFIC COMPANY 1430 Grande Vista Avenue Los Angeles 23, California
45311	PC	PACIFIC AIRMOTIVE CORPORATION 2940 North Hollywood Way Burbank, California
77200	PE	PESCO PRODUCTS DIVISION 24700 North Miles Road Bedford, Ohio
77221	PHC	PHAOSTRON INSTRUMENT AND ELECTRONIC CO. 151 Pasadena Avenue Pasadena, California
77250	PHE	PHEOLL MANUFACTURING COMPANY 5700 Roosevelt Road Chicago, Illinois
81380	PIQA	PIQUA ENGINEERING, INCORPORATED 112 East Ash Street Piqua, Ohio
45722	PK	PARKER-KALON CORPORATION New York, New York
77326	PLL	JOSEPH POLLAK CORPORATION 81 Freeport Street Dorchester, Massachusetts
77388	PRB	PRICE BROTHERS Chicago, Illinois
98468	PRJ	PRODUCTION RESEARCH COMPANY Thornwood, New York
82415	PRL	PRICE ELECTRIC CORPORATION 5540 Church Street Frederick, Maryland
49034 82174	PROD	PRODUCTION ENGINEERING AND MFG. CO. Succeeded by U. S. DIE CASTING AND MFG. CO. Berkeley, California

Federal Supply Code For Mfrs.	Navy Alpha-betical Code	Manufacturer
		K
83304	KAAG	Kauffman Lattimer Company 263 North Front Street Columbus, Ohio
75345	KH	Kirkhill Rubber Company 811 West 58th Street Los Angeles, California
75237	KNM	Kaynar Manufacturing Company East 16th and Griffith Los Angeles, California
89944	KO	Kollsman Instrument Corporation 80-08 45th Avenue Elmhurst 73, New York
75361	KOE	Koehler Aircraft Products Co. 409 Leo Street Dayton, Ohio
81590	KOR	Korry, Boris V., Company 223 Eighth Avenue, North Seattle 9, Washington
75312	KWC	Keystone Watch Case Division Riverside Metal Company Riverside, New Jersey
75287	KY	Kenyon Instrument Company, Inc. 1345 New York Avenue Huntington Station Long Island, New York
		L
35351	LA	Lear, Incorporated 110 Ionia Avenue, N. W. Grand Rapids 2, Michigan
91864	LADM	Leonard, Wallace O. Incorporated 373 South Fair Oaks Pasadena, California
35662	LEL	Leland Electric Company 1501 Webster Street Dayton 1, Ohio
35918	LEN	Lewis Engineering Company 52 Rubber Avenue Naugatuck, Connecticut
81840	LGHI	Leland, George H. Incorporated 123 Webster Street Dayton 2, Ohio
36659	LH	Lockheed Aircraft Corporation 2555 North Hollywood Way Burbank, California
36536	LI	Liquidometer Corporation 36th and Skillman Avenue Long Island City 1, New York
35344	LR	Leach Relay Company 5915 Avalon Boulevard Los Angeles 3, California
75915	LTF	Littelfuse, Incorporated 1865 Miner Street Des Plaines, Illinois
82833	LYQ	Hansen-Lynn Company, Inc. 800 South Flower Street Burbank, California
01178		Lourdes Hydraulics, Incorporated Brooklyn, New York
		M
91927	MAFN	Micro Metal Products Company 1281 Riverside Drive Los Angeles, California
91893	MAIV	Marion Screw Products Marion, Indiana
96625	MAR	Marman Products Company, Inc. 11214 Exposition Blvd. Los Angeles 64, California
87034	MARI	Marco Industries Company 207 South Helena Street Anaheim, California
39015	MAX	Maxson, W. L. Corporation 475 10th Avenue New York 18, New York
91929	MCS	Micro Switch Division Minneapolis-Honeywell Regulator Co. Freeport, Illinois
76296	MCU	McCulloch Engineering Company (succ by B. W. Supercharger, Inc.) Milwaukee, Wisconsin
76050	MCV	M. C. Manufacturing Company 118 Indianwood Road Lake Orion, Michigan
76374	MEH	Mechanical Products, Inc. 1824 River Street Jackson, Michigan
82634	MGL	McGill Manufacturing Company, Inc. 909 North Lafayette Valparaiso, Indiana
92563	MGLA	Bearings Division McGill Manufacturing Company, Inc. Valparaiso, Indiana
94580	MHA	Aeronautical Division Minneapolis-Honeywell Regulator Co. 2600 Ridgeway Road Minneapolis, Minnesota
76534	MHSC	Muehhausen Spring Corporation 500 East Ottawa Street Logansport, Indiana
88525	MIM	Minnesota Mining and Manufacturing Co. 8825 Grinnell Avenue Detroit, Michigan
76530	MKL	Monadnock Mills Division Sub. of United Carr Fastener Corp. 1977 First Avenue San Leandro, California
81579	MSE	Maybar Corporation 200 North Avenue Los Angeles 42, California
39661	MSO	Menasco Manufacturing Company 805 South San Fernando Boulevard Burbank, California

Federal Supply Code For Mfrs.	Navy Alpha-betical Code	Manufacturer
93724	MVEM	Mar Vista Engineering Company 5420 West 104th Street Los Angeles 45, California
97557		Morton Machine Works 2425 Wolcott Street Detroit, Michigan
92310		W. I. Mann Company 104 East Foothill Boulevard Monrovia, California
		N
89372	NA	North American Aviation, Inc. 4300 East Fifth Avenue Columbus 16, Ohio
88978	NAQ	North American Philips Company Electronics Division Mt. Vernon, New York
93835	NAWL	National Waterlift Company 2220 Palmer Avenue Kalamazoo, Michigan
76793	NEN	Nobles Engineering and Mfg. Co. 645 East Seventh Street St. Paul 6, Minnesota
76786	NJ	North and Judd Manufacturing Company New Britain, Connecticut
76689	NSC	National Screw and Mfg. Company 2440 East 75th Street Cleveland 4, Ohio
76691	NTS	National Telephone Supply Co., Inc. Cleveland, Ohio
94581	NUCA	National Utilities Corporation 826 South Arroyo Parkway Pasadena 2, California
80539	NUS	Nutt-Shel Company 811 Airway Glendale 1, California
43491	NYB	New York Air Brake Company 230 Park Avenue New York 17, New York
98524		National Screw & Mfg. Co. of California Los Angeles, California
		Nylon Molding Corporation Garwood, New Jersey
		O
81716	OAKA	Oak Manufacturing Company 1260 Clybourn Avenue Chicago, Illinois
44655	OM	Ohmite Manufacturing Company 3601 West Howard Street Skokie, Illinois
76906	OPS	Operating and Maintenance Specialties Charlotte, North Carolina
45225	OWT	Owatonna Tool Company 450 North Cedar Street Owatonna, Minnesota
99537		Ohio Fabricators Company Coshocton, Ohio
		P
45681	PA	Parker Appliance Company 17325 Euclid Avenue Cleveland, Ohio
03818	PA	Parker Appliance Company Rubber Products Division Los Angeles, California
92003	PAET	Parker Aircraft Company 5728 West Century Blvd. Los Angeles 45, California
45598	PANT	Pantex Manufacturing Corporation 521 Roosevelt Avenue P.O. Box 660 Pawtucket, Rhode Island
45402	PAS	Pacific Scientific Company 1430 Grande Vista Avenue Los Angeles 23, California
45311	PC	Pacific Airmotive Corporation 2940 North Hollywood Way Burbank, California
77200	PE	Pesco Products Division 24700 North Miles Road Bedford, Ohio
77221	PHC	Phaostron Instrument and Electronic Co. 151 Pasadena Avenue Pasadena, California
77250	PHE	Pheoll Manufacturing Company 5700 Roosevelt Road Chicago, Illinois
81380	PIQA	Piqua Engineering, Incorporated 112 East Ash Street Piqua, Ohio
45722	PK	Parker-Kalon Corporation New York, New York
77326	PLL	Joseph Pollak Corporation 81 Freeport Street Dorchester, Massachusetts
77388	PRB	Price Brothers Chicago, Illinois
98468	PRJ	Production Research Company Thornwood, New York
82415	PRL	Price Electric Corporation 5560 Church Street Frederick, Maryland
49034 82174	PROD	Production Engineering and Mfg. Co. Succ by U.S. Die Casting and Mfg. Co. Berkeley, California
94701	PROO	Proof Industries 6516 Detroit Avenue Cleveland 2, Ohio
81321	PUP	Purolator Products, Inc. 970 New Brunswick Avenue Rahway, New Jersey
93615	PXC	Permoflux Corporation 4101 San Fernando Road Glendale, California
97978		Price, D. W. Corporation c/o Rowe Sales Company 2140 Westwood Boulevard Los Angeles, California

Federal Supply Code For Mfrs.	Navy Alphabetical Code	Manufacturer
83515	WKG	Whittaker, Guy Company 2020 West Washington Los Angeles, California
79136	WKI	Waldes-Koh-I-Noor, Inc. 47-10 Anstel Place Long Island City 1, New York
00443		Waveline, Inc. Passaic Avenue Caldwell, New Jersey
66640	WAC	Wright Aeronautical Corporation Main and Passaic Street Woodridge, New Jersey
94256 79318	WTR	Whittaker, Wm. R., Company, Ltd. Saval Division Los Angeles, California
		Z
		Zep Aero Company 113 Sheldon Street El Segundo, California

SEPARATE ILLUSTRATED PARTS BREAKDOWN LIST

The following is a list of assemblies, accessories and vendors items applicable to Model FJ-4/4B Aircraft

PART NUMBER	FEDERAL SUPPLY CODE	VENDORS CODE	TECHNICAL MANUAL	NOMENCLATURE
AA31306H (AN6279-6CD)	62983	VI	NA 03-30CH-591	Valve
AA32305R2	62983	VI	AN 03-30CH-71	Pump
AA60302R	62983	VI	NA 03-30CH-580	Pump
AA65306R	62983	VI	NA 03-30CH-580	Pump
AC-111 (AN5825-7)	75485	LNR	NA 05-20-552	Indicator
AERO 10C1 (MK-16 MOD-1)	80065		NA 11-70HB-505	AFCS
AERO 18A (GG22B1)	94580	MHA	NA 11-5MD-501	Accelerometer
AERO 18A (JG7044D3)	94580	MHA	NA 11-5MD-505	Vertical Gyro
AERO 18A (JG744E2)	94580	MHA	NA 11-5MD-507	Gyro
AERO 18A (YG-309B-4)	94580	MHA	NA 11-5MD-501	AFCS
	94580	MHA	NA 11-75-516	AFCS
AERO 18B (H6467)	82227	HYAW	NA 11-5MD-515	Relay Time Delay
AERO 2A	83532	ESEC	NA 11-10-517	Control Unit
AERO 3A (55A83J1)	11368	CTY	NA 11-75A-506	Launcher
AERO 3A (56A41J1)	11368	CTY	NA 11-75A-506	Pylon
AERO 65A (55A44R66-1)	96137	MCDE	NA 11-5E-509	Rack
AERO 7A (5444622-507)	18355	DG	NA 11-5-591	Ejector Bomb Rack
AFS6-07	45598	PANT	NA 03-30EC-510	Valve
ALYZH5323S	05624	BCC	AN 03-75BA-11	Micropositioner
AN/APA-89			NA 16-30APA89-502	Coder Group
AN/APG-30			AN 16-30APG30-3	Radar Set
AN/APG-30A			NA 16-30APG30-504	Radar Set
AN/APX-6B			AN 16-30APX6-54	Radar Set
AN/ARA-25			AN 16-30ARA25-4	Direction Finder Group
AN/ARC27A			NA 16-30ARC27-501	Radio Set
AN/ARN-21			AN 16-30ARN21-4	Radio Set
AN/ARN-14E			AN 16-35R541-4	Radio Set
AN-N6A	72314	FAC	AN 10-10C-4	Camera
AN-N6A (CG-3)	06650	BEH	AN 10-10C-4	Camera
AN3025-1	74063	HEM	AN 03-5AJ-9	Cutout
AN3350-2 (7064-758)	35344	LR	NA 03-5-675	Relay
AN3352-1 (7064-208)	35344	LR	NA 03-5-673	Relay
AN5544-3	89944	KO	AN 05-5E-30	Tachometer Generator
	95412	GE	AN 05-5-6	Tachometer Generator
AN5743 (22809)	79300	WW	AN 05-35A-20	Clock
AN5743 (22809-2)	79300	WW	AN 05-35A-26	Clock

PART NUMBER	FEDERAL SUPPLY CODE	VENDORS CODE	TECHNICAL MANUAL	NOMENCLATURE
AN5743-2 (2159)	20209	EG	NA 05-35A-505	Clock
AN5743-2 (22809L2)	79300	WW	AN 05-35A-26	Clock
AN5743L2 (2161)	20209	EG	NA 05-35A-505	Clock
AN5743L2 (22809LZSB)	79300	WW	NA 05-35A-502	Clock
AN5760L4B	89944	KO	NA 05-30-536	Altimeter
AN5760L4B (A50MBN)	98810		NA 05-30-540	Altimeter
AN5760L4B (2240LU-4-02)	89944	KO	NA 05-30-538	Altimeter
AN5760L4B (671CLU-4-035)	89944	KO	AN 05-30-27	Altimeter
AN5766T4	70214	API	AN 05-15-103	Compass
	19315	ECP	AN 05-15-71	Compass
AN5766T4 (C-2A)	61349	UG	AN 05-15-590	Compass
AN5766T4 (163OU-4-02)	89944	KO	AN 05-15-588	Compass
AN5771-4 (10230A)	19728	ELA	TO 05-70-3	Gage
AN5771T4C	61349	UG	TO 05-70F-511	Gage
AN5820-2	19315	ECP	NA 05-20T-14	Indicator
AN5820-2 (1722-2AL-B2)	19315	ECP	AN 05-20-41	Indicator
AN5825-7	19315	ECP	AN 05-20-17	Indicator
			NA 05-20-540	
AN5825-7 (AC-111)	75485	LNR	NA 05-20-552	Indicator
AN5825-7 (D07161-04-051)	89944	KO	NA 05-20-558	Indicator
AN5825-7 (RC60)	98810		NA 05-20-562	Indicator
AN5825-7 (716CX-4-051)	89944	KO	NA 05-20-559	Indicator
AN5825T7 (716CU-4-051)	89944	KO	NA 05-20-545	Indicator
AN5825T7 (716CU-4-052)	89944	KO	AN 05-20-42	Indicator
AN6279-6CD (AA31306H)	62983	VI	NA 03-30CH-591	Valve
AN6279-6CD (HPLV-A0)	45598	PANT	AN 03-30EC-3	Valve
AN6279-6CD (1030)	94874	DRO	NA 03-30DRO-501	Valve
AN6279-6CD (21106)	00502	AP	AN 03-30CL-80	Valve
AN6538-2 (2-110-200)	74908	IA	AN 03-30A-10	Valve
AN6538-2 (81-104)	71483	CDC	AN 03-30AG-3	Valve
AN6538-3 (81-105)	71483	CDC	AN 03-30AG-3	Filter
AV16B1197D	73760	GCO	AN 03-1-87	Valve
			NA 03-10ABB-567	
AV16B1307D	73760	GCO	AN 03-1-86	Gate Valve
AV2A1390B	73760	GCO	AN 03-1-87	Valve
			NA 03-10ABB-640	
AW1-1/2-12AF11	61349	UG	NA 03-50D-502	Gage
AYLZH5323S	05624	BCC	AN 03-75BA-11	Micropositioner
A17397	29500	HOH	AN 03-30-26	Damper

PART NUMBER	FEDERAL SUPPLY CODE	VENDORS CODE	TECHNICAL MANUAL	NOMENCLATURE
A50MBN (AN5760LAB)	98810		NA 05-30-540	Altimeter
A6020-8	91130	VNMB	NA 03-30DD-8	Valve
BG29A-1	40931	MH	NA 11-5MD-503	Calibrator
BG29B-3	40931	MH	NA 11-70HED-502	Calibrator
C-2A (AN5766T4)	61349	UG	AN 05-15-590	Compass
CG-3 (AN-N6A)	06650	BEH	AN 10-10C-4	Camera
CN112/APG-30	82260	HOLI	NA 16-30APG30-504	Voltage Regulator
CV279/ARN	06840	BX	AN 16-30ARN21-4	Phase Detector
C10620-1	78710	TEX	NA 03-5CD-515	Box
C10620-2	78710	TEX	NA 03-5CD-515	Box
C7259-3	78710	TEX	NA 03-5CD-512	Box
C760B/A	06840	BX	AN 16-30ARN14-4	Panel
D07161-04-051 (AN5825-7)	89944	KO	NA 05-20-558	Indicator
D1840-2	81817	HOOV	NA 03-CHP-514	Actuator
D1850	81817	HOOV	NA 03-5CHP-506	Actuator
D1870	81817	HOOV	NA 03-5CHP-512	Actuator
D1890	81817	HOOV	NA 03-5CHP-508	Actuator
D1900	81817	HOOV	NA 03-5CHP-510	Motor Drive
D6270-1	72914	GMC	NA 03-5G-502	Flasher
EA804FMK1474	36536	LI	NA 05-65AE-521	Tank Unit
EA804FML1473	36536	LI	NA 05-65AE-521	Tank Unit
EA804FMM1472	36536	LI	NA 05-65AE-521	Tank Unit
EA805FMM1472	36536	LI	NA 05-65AE-521	Tank Unit
EA856FAF19	36536	LI	NA 05-65AE-519	Indicator
EA856MFC20	36536	LI	NA 05-65AE-519	Indicator
EA992GPK1479	36536	LI	NA 05-65AE-523	Tank Unit
EA992GPK1481	36536	LI	NA 05-65AE-523	Tank Unit
EA992GPL1477	36536	LI	NA 05-65AE-523	Tank Unit
EA992GPL1478	36536	LI	NA 05-65AE-523	Tank Unit
EA992GPL1480	36536	LI	NA 05-65AE-523	Tank Unit
EA992GPM1476	36536	LI	NA 05-65AE-523	Tank Unit
EC30E13E6	19315	ECP	NA 03-5AA-550	Starter-Generator
EM1400-1	96212	EMEG	NA 03-5CH-527	Actuator Assy
E5109-2 (MG54C)	83298	BARB	NA 03-5HB-502	Inverter
E5109-2 (MG54D)	83298	BARB	NA 03-5HB-502	Inverter
E54807-1 (F148-1)	31435	JH	NA 03-5HA-506	Inverter
FHE28	11583	CK	AN 02B-35AAC-2	Igniter Fuel
F148-1 (E54807-1)	31435	JH	NA 03-5HA-506	Inverter

PART NUMBER	FEDERAL SUPPLY CODE	VENDORS CODE	TECHNICAL MANUAL	NOMENCLATURE
F148-2	31435	JH	NA 03-5HA-506	Inverter
GG22B1 (AERO 18A)	94580	MHA	NA 11-5MD-501	Accelerometer
G318630	57733	SW	AN 02B-35AAC-4	Pump
G6425 (AERO 18A)	82227	HYAW	NA 11-5MD-513	Relay Time Delay
HPLV-AO (AN6279-6CD)	45598	PANT	AN 03-30EC-3	Valve
H60-000 (MS28054-1)	31435	JH	NA 05-5K-504	Generator Tachometer
H6467 (AERO 18B)	82227	HYAW	NA 11-5MD-515	Relay Time Delay
ID307/ARN-21			NA 16-35ID307-502	Indicator
ID310/ARN-21			NA 16-35ID310-502	Indicator
JG7044D3 (AERO 18A)	94580	MHA	NA 11-5MD-505	Gyro Vertical
JG7044D5	94580	MHA	NA 11-70HEA-502	Gyro Vertical
JG7044E-6	94580	MHA	NA 11-70HEB-501	Gyro
JG744E2 (AERO 18A)	94580	MHA	NA 11-5MD-507	Gyro
J65W16	66640	WAC	AN 02B-35AAC-4	Engine
J65W16A	66640	WAC	AN 02B-35AAC-4	Engine
KY81/APA-89			NA 16-30ATA89-502	Unit
MA-2 (1325-556659)	92003	PA	NA 03-100F-515	Nozzle
MB-1 (14609-1S-B1)	19315	ECP	NA 05-20GF-510	Indicator
MB-1 (613937)	56232	SPE	AN 05-20GD-15	Indicator
MC1603-1750	76050	MCV	NA 03-10ABB-550	Valve
MC1603-34.5	76050	MCV	NA 03-10ABB-550	Relief Valve
MC2644	76050	MCV	NA 03-30MC-502	Valve
MG54C (E5109-2)	83298	BARB	NA 03-5HB-502	Inverter
MG54D (E5109-2)	83298	BARB	NA 03-5AB-502	Inverter
MH100	88947		NA 11-5MD-511	Indicator
MK-16 MOD-1(AERO 10C1)	80065		NA 11-70HB505	AFCS
MK-25 MOD-0			NAV 11-70HB-504	Range Unit
MK-35 MOD-3			NAV 11-70HB-504	Control Panel
MK-75 MOD-0			NAV 11-70HB-504	Power Supply
MK-8 MOD-8			NAV 11-70HB-504	Sight Unit
MK-86 MOD-0			NAV 11-70HB-504	Computer
MK-87 MOD-0			NAV 11-70HB-504	Range Rate Computer
Model 973G (105716-01)	35351	LA	NA 05-20GE-505	Vertical Gyro
Model 975N (105713-01)	35351	LA	NA 05-20GE-503	Accelerometer
MS28005-5 (7609-37-A5-1)	19315	ECP	NA 05-55B-556	Transmitter
MS28025-1 (3419-5A-A1)	19315	ECP	AN 05-20KC-3	Accelerometer
MS28033-1 (8DJ57HAA3)	24446	GE	AN 05-5J-17	Tachometer

PART NUMBER	FEDERAL SUPPLY CODE	VENDORS CODE	TECHNICAL MANUAL	NOMENCLATURE
MS28054-1 (H60-000)	31435	JH	NA 05-5K-504	Tachometer-Generator
MS28054-1 (1354-0111302)	89944	KO	AN 05-SE-30	Tachometer-Generator
MS28054-1 (2CM9AAC1)	95412	GE	AN 05-5-6	Tachometer-Generator
MS28054-1 (2CM9AAC2)	95412	GE	AN 05-5-6	Tachometer-Generator
MS28054-1 (2CM9AAC6)	95412	GE	AN 05-5-6	Tachometer-Generator
MS28720-6 (50221)	81321	PUP	NA 03-30CM-504	Filter
MT1042/ARA-25			AN 16-30ARA25-4	Mount
MT1043/ARA-25			AN 16-30ARA25-4	Mount
MT362A/A			AN 16-30APX6-54	Mount
MT627A/ARN-14			AN 16-30ARN14-4	Mount
MT707/APG-30			NAV 16-30APG30-504	Mount
MT739/4			NAV 16-30APG30-504	Mount
MT822/ARC-27			NAV 16-30ARC27-501	Mount
MT928/ARN-21			AN 16-30ARN21-4	Mount
MT962/ARN-14			AN 16-30ARN14-4	Mount
M6437	82227	HYAW	NA 11-5MD-513	Relay Time Delay
R-540/ARN-14C			TO 16-30ARN14-8	Receiver
RC60 (AN5825-7)	98810		NA 05-20-562	Indicator
RE120/ARA-25			AN 16-30ARA25-4	Solenoid Relay
RT178/ARC-27	13499	CR	NAV 16-30ARC-27-501	Receiver-Transmitter
RT220/ARN-21	80100	FDR	AN 16-30ARN21-4	Receiver-Transmitter
RT322/APG-30A	82260	HOLI	NAV 16-30APG30-504	Transmitter
RT82A/APX-6	45413	PKB	AN 16-30APX6-54	Receiver-Transmitter
R83PR2867			AN 03-50A-49	Regulator
SE16-2	35662	LEL	NA 03-5HH-502	Inverter
SE5-1 (E1737-1)	35662	LEL	AN 03-SHH-17	Inverter
SE5-2	35662	LEL	AN 03-5HH-17	Inverter
SLZ2018	78423	SLZ	AN 05-20NB-3	Detector
SLZ2167	78423	SLZ	NA 05-20NB-513	Indicator
SLZ9036	78423	SLZ	NA 05-20NB-514	Indicator
S513-50-3	89307	SPES	AN 03-30DV-5	Accumulator
TE50768-1	78727	TEC	AN 02B-35AAC-4	Thermocouple
TE50768-3	78727	TEC	AN 02B-35AAC-4	Thermocouple
TG77200	59875	TP	AN 03-110DABA-4	Pump
TG78400-2	59875	TP	AN 03-110DABA-4	Pump
TG78400-3	59875	TP	AN 03-110DABA-4	Pump
V4400-3	96487	VABH	NA 03-110FH-501	Valve
YG-309B-4 (AERO 18A)	94580	MHA	NA 11-5MD-501	AFCS
	94580	MHA	NA 11-75-516	AFCS

PART NUMBER	FEDERAL SUPPLY CODE	VENDORS CODE	TECHNICAL MANUAL	NOMENCLATURE
1V4 Series	89372	NA	NA 03-30CX-512	Valve Assy
10-1006	92003	PAET	NA 03-30CG-505	Valve Assy
10-1303-23S130	02860	ASE	AN 03-1-594	Reel Assy
10-81445-1	06840	BX	AN 02B-35AAC-2	Igniter Fuel
10-81450-1	06840	BX	NA 03-5NA-512	Primer
10-87710-2	06840	BX	NA 03-5NA-512	Magneto
10-87720-2	06840	BX	NA 03-5NA-512	Magneto
102052-7	99193	AIR	AN 03-80A-28	Regulator
10212-200	81839	CARM	NA 03-10AB-545	Valve
10230A (AN5771-4)	19728	ELA	TO 05-70-3	Gage
1030 (AN6279-6CD)	94874	DRO	NA 03-30DRO-501	Valve
104200-2	91864	LADM	NA 03-30EV-501	Valve
104232-1	99193	AIR	AN 03-30AK-512	Valve Assy
104260	99193	AIR	NA 03-30AK-560	Valve
104465	94256	WTR	NA 03-30EB-566	Valve
104685	94256	WTR	AN 03-1-110	Valve
105713-01 (Model 975N)	35351	LA	NA 05-20GE-503	Accelerometer
105716-01 (Model 973G)	35351	LA	NA 05-20GE-505	Vertical Gyro
105759-01	35351	LA	NA 05-20GE-507	Indicator
106130-2	91864	LADM	NA 03-10-616	Switch
106130-9	91864	LADM	NA 03-10-616	Hyd Press Switch
106365	94256	WTR	NA 03-30EB-577	Valve Assy
108105	94256	WTR	NA 03-10ABB-638	Valve
110085	94256	WTR	NA 03-30EB-583	Valve
11030	93724	MVEM	NA 03-30EX-503	Valve
11070	93724	MVEM	NA 03-30EX-504	Valve
1111-517706	45681	PA	NA 03-10AB-556	Valve
111259-01	35351	LA	NA 05-20GE-506	Shockmount
111465	94256	WTR	NA 03-30EB-590	Valve
111865	94256	WTR	NA 03-30EB-591	Valve
111875	94256	WTR	NA 03-30EB-592	Valve
113050-2	91864	LADM	AN 03-30EV-1	Regulator Assy
113195	94256	WTR	NA 03-30EB-626	Valve Assy
116465	94256	WTR	NA 03-10ABW-514	Valve Assy
117235	94256	WTR	NA 03-10ABW-505	Valve Assy
118AB	35351	LA	AN 05-45EA-7	Motor Servo
11940	93724	MVEM	NA 03-30EX-505	Valve
12000	82106	BTP	NA 03-30DA-512	Valve
122637-200	77200	PE	NA 03-30CB-541	Pump Assy

PART NUMBER	FEDERAL SUPPLY CODE	VENDORS CODE	TECHNICAL MANUAL	NOMENCLATURE
122637-220-01	77200	PE	NA 03-30CB-542	Pump
122637-220-04	77200	PE	NA 03-30CB-542	Pump Assy
122637-221-01	77200	PE	NA 03-30CB-542	Pump Assy
122637-221-02	77200	PE	NA 03-30CB-542	Pump Assy
122913-010-01	77200	PE	NA 03-30CB-544	Boost Pump
122913-010-02	77200	PE	NA 03-30CB-544	Boost Pump
13A003M	81892	FLRE	NA 03-100A-501	Nozzle
130R0300-8	14650	CNL	AN 03-30AJ-20	Compressor
1325-556659 (Type MA-2)	92003	PA	NA 03-100F-515	Nozzle
135D100-3	14650	CNL	AN 03-30AJ-15	Regulator
135D100-4	14650	CNL	AN 03-30AJ-15	Regulator
1354-0111302 (MS28054-1)	89944	KO	AN 05-5E-30	Generator-Tachometer
1354-526177	45681	PA	NA 03-10AB-552	Valve
135897	79211	WAD	NA 03-1-581	Gear Box
14-1082	92003	PAET	NA 03-30CG-528	Valve
14-1086	92003	PAET	NA 03-30CG-527	Valve
140B3100	14650	CNL	NA 03-30AJ-503	Valve
14460	03990	ARO	NA 03-50GBA-502	Converter
14609-1S-B1 (MB-1)	19315	ECP	NA 05-20GF-510	Indicator
1500B	35351	LA	AN 05-45E-2	Yaw Damper
15011-1A1	19315	ECP	NA 05-15-597	Transmitter
15018-1A1	19315	ECP	NA 05-15-597	Transmitter
15716-1A	19315	ECP	NA 05-15-599	Controller
15820-1A	19315	ECP	NA 05-45D-502	Gyro Amplifier
1588-2C	83298	BARB	NA 03-30CE-538	Voltage Regulator
1588-2D	83298	BARB	NA 03-30CE-538	Voltage Regulator
	83298	BARB	AN 03-5AA-30	Voltage Regulator
16010-1A	19315	ECP	NA 05-15-601	Coupler
1630U-4-02 (AN5766T4)	89944	KO	AN 05-15-588	Compass
172B2	35918	LEN	NA 05-40DB-507	Indicator
17201-1A	19315	ECP	NA 05-15-595	Transmitter
1722-2AL-BZ (AN5820-2)	19315	ECP	AN 05-20-41	Indicator
1725-1BD-A1-1	99251		NA 05-20HG-508	Indicator
			NA 05-20HG-507	
177-58047-15	89372	NA	NA 03-30SC-501	Accumulator Assy
1600	98656		NA 03-30-629	Valve
181-34505	89372	NA	NA 03-25GBD-532	Link Assy
181-56201-10	89372	NA	NA 03-25-517	Snubber Assy
181-58030	89372	NA	NA 03-25GBD-526	Cylinder Assy
181-58033-1	89372	NA	NA 03-25GBD-520	Cylinder Assy

PART NUMBER	FEDERAL SUPPLY CODE	VENDORS CODE	TECHNICAL MANUAL	NOMENCLATURE
38094-1	99193	AIR	NA 11-10H-508	Boost Motor Assy
38094-2	99193	AIR	NA 11-10H-508	Boost Motor Assy
3815-7	83115	HTEC	NA 03-30HT-501	Reel Assy
4-254-1	82267	SZT	NA 03-10ABG-517	Valve
4-254-71	82267	SZT	NA 03-10ABG-512	Valve
4000-24	98087		NA 03-10-611	Switch
401045	66503	WGV	AN 02B-35AAC-4	Valve
4125-17	82152	TRPR	NA 03-80E-505	Valve Assy
435419-1	88947		NA 11-5MD-511	Indicator
441149-1	82227	HYAW	NA 11-5MD-513	Timer
471T100-301	98889		NA 03-5CE-564	Screwjack
50032	80477	RHW	NA 03-40EA-506	Quadrant Assy
50221 (MS28720-6)	81321	PUP	NA D3-30CM-504	Filter
51C239-1	80234	VCH	NA 03-70A-516	Regulator
51C242-1	80234	VCH	NA 03-70A-516	Regulator
51000	81873	HYRM	NA 03-30ET-515	Valve Assy
52001-61	96215	DRES	NA 03-30ER-501	Valve Assy
53038-2	81321	PUP	NA 03-10-632	Filter Fuel
532567	39661	MSO	NA 03-25EF-502	Axle
5444622-507 (AERO 7A)	18355	DG	NA 11-5-591	Ejector Bomb Rack
55A44R66-1 (AERO 65A)	96137	MCDE	NA 11-5E-509	Rack
55A83J1 (AERO 3A)	11368	CTY	NA 11-75A-506	Launcher
550120	45311	PC	AN 03-80E-18	Valve
550120-2	45311	PC	AN 03-80E-18	Valve Assy
550120-5	45311	PC	AN 03-80E-18	Valve Assy
557600	39661	MSO	NA 03-25EF-502	Strut Assy
557600-501	39661	MSO	NA 03-25EF-502	Strut Assy
56A41J1 (AERO 3A)	11368	CTY	NA 11-75A-506	Pylon
6124	86090	CAJC	NA 03-10ABB-720	Valve
613937 (MB-1)	56232	SPE	AN 05-20GD-15	Indicator
66WT200	43491	NYB	NA 03-30CS-519	Pump Assy
671CLU-4-035 (AN5760L4B)	89944	KO	AN 05-30-27	Altimeter
7-653-171-1	82267	SZT	NA 03-10ABG-511	Nozzle
7064-208 (AN3352-1)	35344	LR	NA 03-5-673	Relay
7064-758 (AN3350-2)	35344	LR	NA 03-5-675	Relay
716CU-4-051 (AN5825T7)	89944	KO	NA 05-20-545	Indicator
716CU-4-052 (AN5825T7)	89944	KO	AN 05-20-42	Indicator
716CX-4-051 (AN5825-7)	89944	KO	NA 05-20-559	Indicator
7609-37-A5-1 (MS28005-5)	19315	ECP	NA 05-55B-556	Transmitter
8DJ57HAA3 (MS28033-1)	24446	GE	AN 05-5J-17	Tachometer
81-104 (AN6538-2)	71483	CDC	AN 03-30AG-3	Valve

PART NUMBER	FEDERAL SUPPLY CODE	VENDORS CODE	TECHNICAL MANUAL	NOMENCLATURE
81-105 (AN6538-3)	71483	CDC	AN 03-30AG-3	Filter
83198	73030	HS	NA 03-80HS-501	Heat Exchanger
83501-1	75361	KOE	AN 03-1-82	Valve
840301	33525	WK	AN 03-30AY-2	Valve
840482	33525	WK	AN 03-30AY-2	Cartridge
840499	33525	WK	AN 03-30AY-2	Filter Assy
870399	33525	WK	AN 03-30AL-8	Reducer
870400	33525	WK	AN 03-30AL-8	Regulator Assy
870449	33525	WK	AN 03-30AY-2	Separator
870629	33525	WK	NA 03-30AL-5	Valve Assy
871351	33525	WK	AN 03-30AY-2	Separator
90000-12	81873	HYRM	NA 03-10-618	Switch
90000-2	81873	HYRM	NA 03-10-618	Switch
913B4	35351	LA	AN 05-45EA-7	Drum
9473L	13002	CP	NA 03-25EC-501	Strut Assy
9473R	13002	CP	NA 03-25EC-501	Strut Assy
9530936	73842	GY	AN 03-25BC-2	Wheel
9540729	73842	GY	AN 03-25GAC-4	Brake
9540729C	73842	GY	AN 03-25GAC-4	Brake
9540856	73842	GY	AN 03-25BC-2	Wheel
973G (105716-01)	35351	LA	NA 05-20GE-505	Vertical Gyro
975N (105713-01)	35351	LA	NA 05-20GE-503	Accelerometer
978R	35351	LA	NA 05-20GE-507	Indicator
99200	73030	HS	NA 03-80HS-501	Refrigeration Unit

Useable on Code	Navy Serial Numbers
QZ	139281 thru 139323 and 139424 thru 139523
RA	139524 thru 139555, 141444 thru 141489 and 143493 thru 143643
RB	139281 thru 139323, 139424 thru 139555, 141444 thru 141489 and 143493 thru 143520
RC	139281 thru 139323, 139424 thru 139555, 141444 thru 141489 and 143493 thru 143546
RD	139303 thru 139323, 139424 thru 139555, and 141444 thru 141462
RE	141463 thru 141489 and 143493 thru 143643
RF	139282 thru 139284, 139288, 139292, 139293, 139310, 139467, 139531, 139532, 139537, 143501, 143503, 143505, 143512, 143514 and 143516 thru 143643
RG	139281, 139285 thru 139287, 139289 thru 139291, 139294 thru 139309, 139311 thru 139323, 139424 thru 139466, 139468 thru 139530, 139533 thru 139536, 139538 thru 139555, 141444 thru 141489, 143493 thru 143500, 143502, 143504, 143506 thru 143511, 143513 and 143515
RH	139511 thru 139555 and 141444 thru 141465
RJ	141466 thru 141489 and 143493 thru 143643
RK	139281 thru 139323, 139424 thru 139555 and 141444 thru 141478
RL	139281 thru 139289, 139293, 139294, 139323, 139424 thru 139555, 141444 thru 141489 and 143493 thru 143643
RM	139290 thru 139292, 139295, 139296 and 139316 thru 139322
RN	139531 thru 139555, 141444 thru 141489 and 143493 thru 143593
RP	139295 and 139298 thru 139302
RQ	139531 thru 139555, 141444 thru 141489 and 143493 thru 143514
RR	143515 thru 143643
RS	141444 thru 141489
RT	139441 thru 139450
RU	139295, 139298 thru 139323 and 139424 thru 139430
RV	139531 thru 139555, 141444 thru 141489 and 143493 thru 143548
RW	143549 thru 143643
RX	139295 and 139298 thru 139304
RY	139305 thru 139323, 139424 and 139425
RZ	139281 thru 139323 and 139424 thru 139427
SA	139428 thru 139555, 141444 thru 141489 and 143493 thru 143643
SB	139283, 139293 thru 139323 and 139424 thru 139530
SC	139531 thru 139555, 141444 thru 141466 and 143493 thru 143542
SD	141463 thru 141489
SE	139281 thru 139323, 139424 thru 139555, 141444 thru 141489 and 143493 thru 143550
SF	143551 thru 143643
SG	139281 thru 139297, 139304 thru 139323, 139424 thru 139555, 141444 thru 141489 and 143493 thru 143550
SH	143493 thru 143550
SJ	139281 thru 139323, 139424 thru 139555, 141444 thru 141489 and 143493 thru 143510
SK	143511 thru 143643
SL	143563 thru 143643
SM	143521 thru 143618
SN	143619 thru 143643
SP	139531 thru 139555, 141444 thru 141489 and 143493 thru 143622
SQ	143623 thru 143643
SR	143629 thru 143643
SS	139281, 139282, 139284 and 139286
ST	139283, 139285, 139287 thru 139323 and 139424 thru 139530
SU	139281 thru 139303, 139306 and 139307
SV	139281 thru 139289, 139293 and 139294
SW	139281 thru 139323, 139424 thru 139499, 139501, 139518, 139521 thru 139530, 139532, 139533, 139535, 139539 thru 139542, 139544 and 139545
SX	139500, 139502 thru 139517, 139519, 139520, 139531, 139534, 139536 thru 139538, 139543, 139546 thru 139555, 141444 thru 141489 and 143493 thru 143643
SY	139444, 139478, 139480 thru 139530, 139532 thru 139534, 139538 thru 139555, 141444 thru 141489, 143493 thru 143539, 143541 and 143542
SZ	139281 thru 139290, 139293 thru 139323, 139424 thru 139555, 141444 thru 141489 and 143493 thru 143542
TA	139281 thru 139323, 139424 thru 139555, 141444 thru 141489 and 143493 thru 143598
TB	143599 thru 143643
TC	139288, 139323 and 139424 thru 139470
TD	139281 thru 139315 and 139532 thru 139546
TE	143557 thru 143643
TF	139281 thru 139323, 139424 thru 139555, 141444 thru 141489 and 143493 thru 143556
TG	139531 thru 139555 and 141444 thru 141465

Complete Aircraft

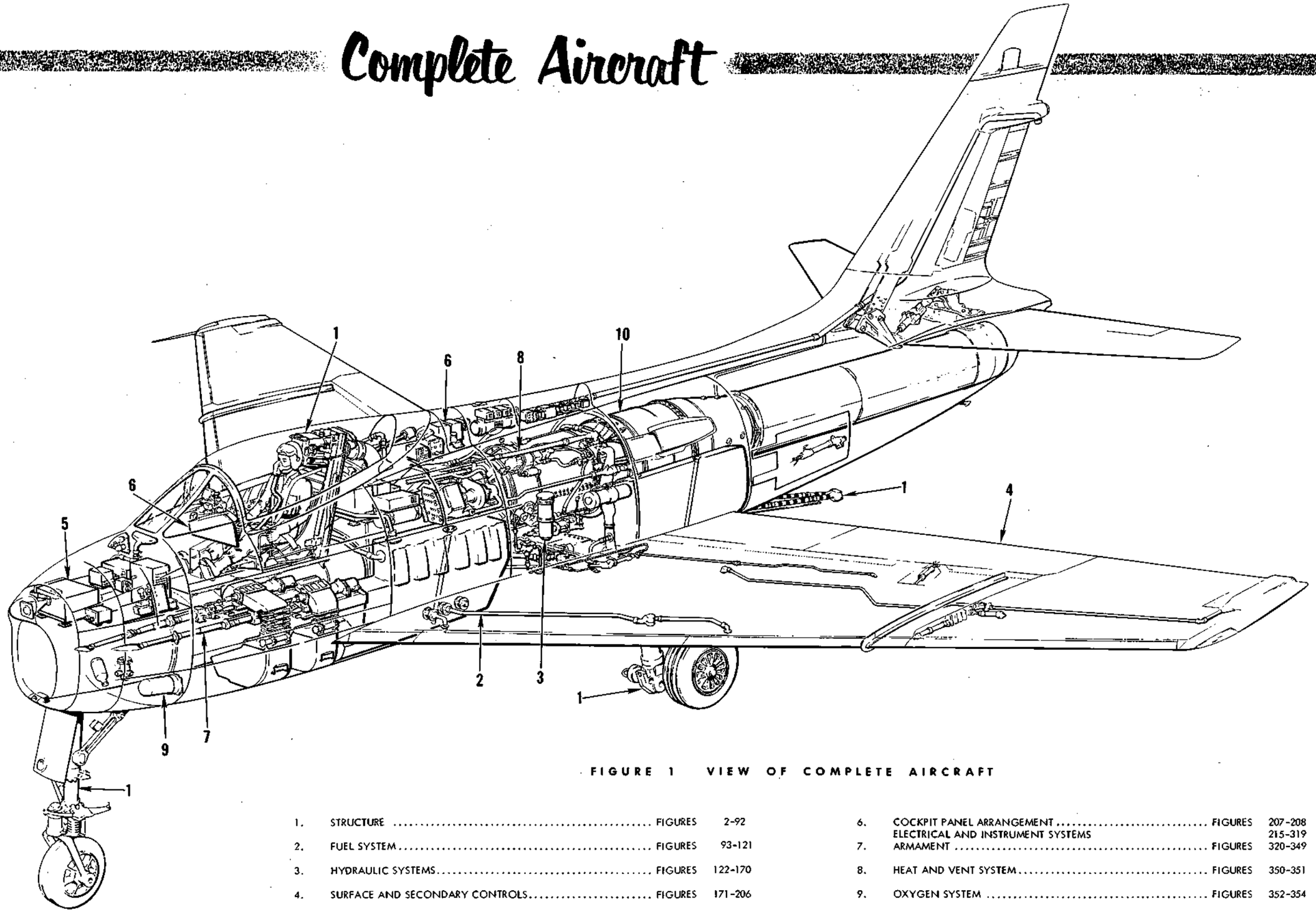

FIGURE 1 VIEW OF COMPLETE AIRCRAFT

1.	STRUCTURE	FIGURES	2-92
2.	FUEL SYSTEM	FIGURES	93-121
3.	HYDRAULIC SYSTEMS	FIGURES	122-170
4.	SURFACE AND SECONDARY CONTROLS	FIGURES	171-206
5.	RADIO AND RADAR	FIGURES	209-214
6.	COCKPIT PANEL ARRANGEMENT	FIGURES	207-208
	ELECTRICAL AND INSTRUMENT SYSTEMS		215-319
7.	ARMAMENT	FIGURES	320-349
8.	HEAT AND VENT SYSTEM	FIGURES	350-351
9.	OXYGEN SYSTEM	FIGURES	352-354
10.	POWER PLANT	FIGURES	355-356

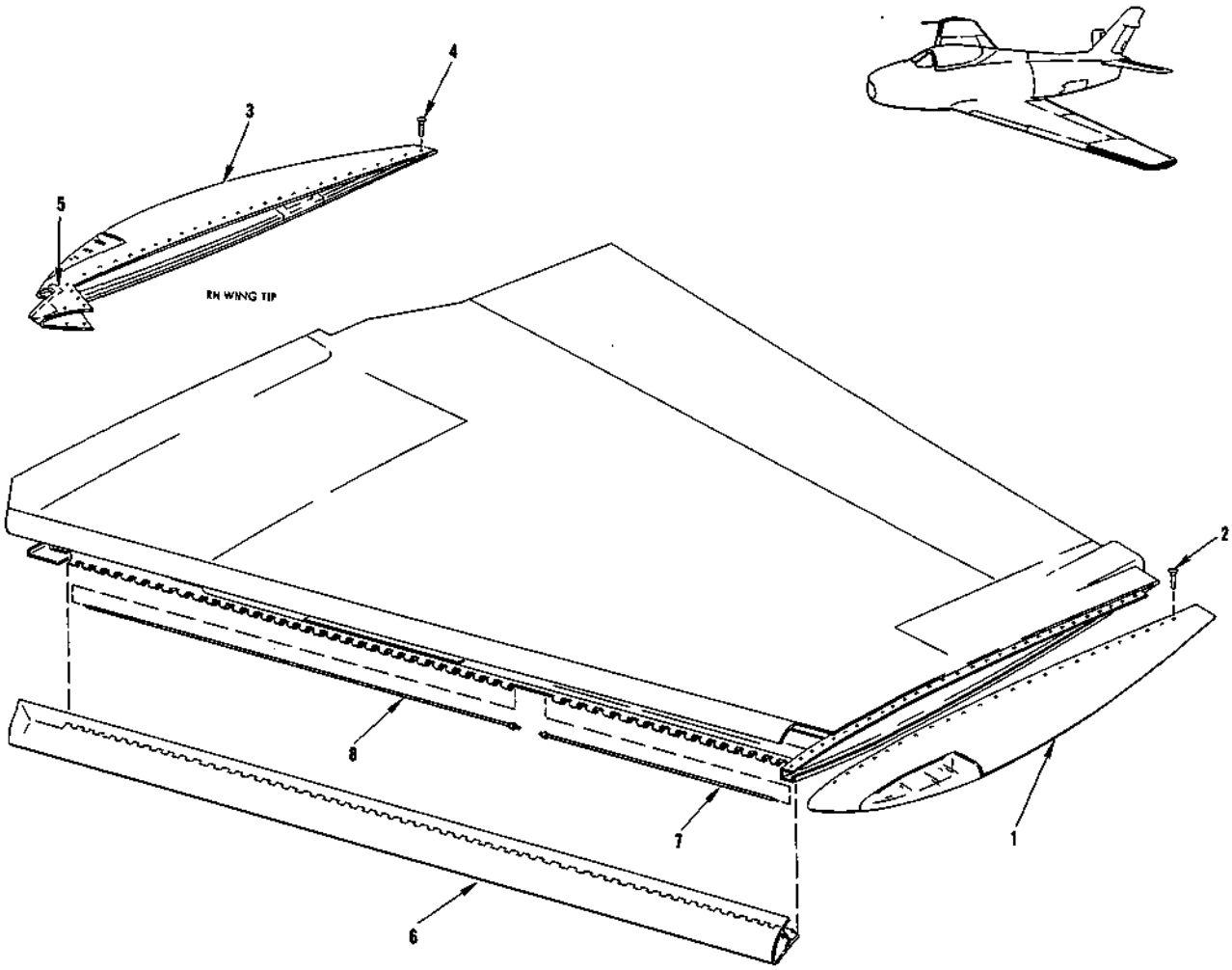

FIGURE 4 - WING TIP AND OUTBOARD DROOP LEADING EDGE ATTACHING PARTS

FIGURE & INDEX NO.	PART NUMBER	1 2 3 4 5 6 7 NOMENCLATURE	UNITS PER ASSY.	USABLE ON CODE	S/C NO.
4-1	209-14659-1	TIP ASSEMBLY, Outboard wing flush light LH	1		
		ATTACHING PARTS			
-2	7S16CN10-8	SCREW, 100° flush head corrosion-resistant (NA) (LH only) (nonmagnetic)	62		
	79NA21-79-02	NUT, Anchor (EN)	62		
		---*---			
-3	209-14659-2	TIP ASSEMBLY, Outboard wing flush light	1	Y	
	209-14659-102	TIP ASSEMBLY, Outboard wing flush light	1	Z	
		ATTACHING PARTS			
-4	AN509-10R8	SCREW (RH only) (use 29 screws on upper surface and 30 screws on lower)	59		
	79NA21-79-02	NUT, Anchor (EN) (RH only) (upper surface)	28		
	MK-1000-1032	NUT, Anchor (KNM) (RH only) (upper surface)	1		
	79NA21-79-02	NUT, Anchor (EN) (RH only) (lower surface)	30		
		---*---			
-5	209-14656	. SEAL, Wing tip pitot boom wing station 229.563 (RH only)	1		
	5P48	. PLATE, Navy identification and modification (NA)	1		
	121002	. CLIP, Fuse (LTF)	2		
-6	209-17502	OUTBOARD DROOP LEADING EDGE (see figures 5 and 171 for complete breakdown)	1		
-7	209-17045-1	PIN ASSEMBLY, Droop leading edge outboard wing outboard	1		
-8	209-17045-71	PIN ASSEMBLY, Droop leading edge outboard wing (inboard) (supersedes 209-17045-41 for future procurement)	1		

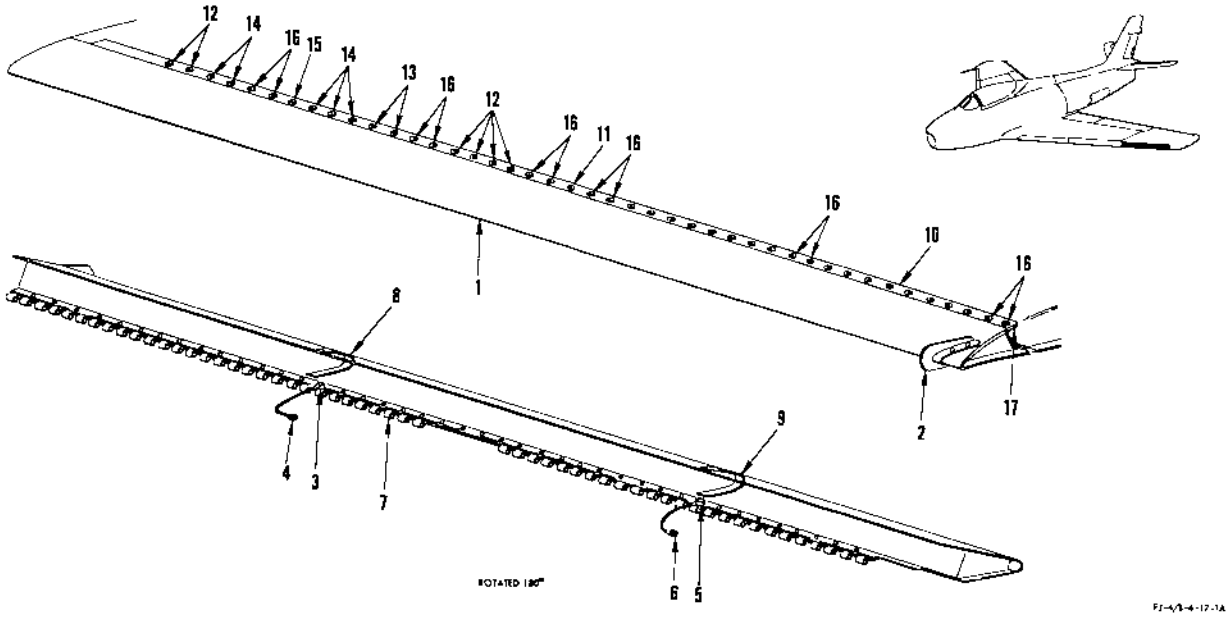

FIGURE 5 - DROOP LEADING EDGE

FIGURE & INDEX NO.	PART NUMBER	1 2 3 4 5 6 7 NOMENCLATURE	UNITS PER ASSY.	USABLE ON CODE	S/C NO.
5	209-17502-1	OUTBOARD DROOP LEADING EDGE, LH (see figure 171 for additional breakdown)	1	ET	515
	209-17502-11	OUTBOARD DROOP LEADING EDGE, LH (see figure 171 for additional breakdown)	1	FR	515
	209-17502-2	OUTBOARD DROOP LEADING EDGE, RH (see figure 171 for additional breakdown)	1	ET	515
	209-17502-12	OUTBOARD DROOP LEADING EDGE, RH (see figure 171 for additional breakdown)	1	FR	515
-1	209-17503-1	. SKIN ASSEMBLY, Droop nose leading edge outer panel LH	1	ET	
	209-17517-1	. SKIN, Droop nose leading edge outer panel LH	1	FR	
	209-17503-2	. SKIN ASSEMBLY, Droop nose leading edge outer panel RH	1	ET	
	209-17517-2	. SKIN, Droop nose leading edge outer panel RH	1	FR	
-2	209-17537-1	. STOP, Wing station 226.375 barrier strap LH	1		
	209-17537-2	. STOP, Wing station 226.375 barrier strap RH	1		
-3	AN509-10R14	. SCREW	1		
	2W18-10M	. WASHER, Flat (NA) (89372)	2		
	AN364-1032	. NUT	1		
-4	AN749-3-6	. JUMPER	1		
-5	AN509-10R14	. SCREW	1		
	2W18-10M	. WASHER, Flat (NA) (89372)	2		
	AN364-1032	. NUT	1		
-6	AN749-3-3	. JUMPER	1		
-7	209-17504-3	. HINGE, Droop leading edge outer panel LH	1		
	209-17504-4	. HINGE, Droop leading edge outer panel RH	1		
-8	209-17532	. STRAP, Droop leading edge outer panel outboard actuator backup	1		
-9	209-17533	. STRAP, Droop leading edge outer panel outboard actuator backup	1		
-10	209-17511-1	RUBBING STRIP ASSEMBLY, Droop leading edge (superseded by 209-17511-11 for future procurement)	1	TF	
	209-17511-11	RUBBING STRIP ASSEMBLY, Droop leading edge (supersedes 209-17511-1 for future procurement)	1	TE	
	209-17511-2	RUBBING STRIP ASSEMBLY, Droop leading edge outer panel RH	1		
	ATTACHING PARTS				
-11	AN509-10R7	SCREW	17		
-12	AN509-10R11	SCREW	6		
-13	AN509-10R12	SCREW	2		
-14	AN509-10R14	SCREW	5		
-15	AN509-10R15	SCREW	1		
	2W18-10	WASHER, Flat (NA) (89372) (LH only)	9		
	2W18-10	WASHER, Flat (NA) (89372) (RH only)	12		
	AN365-1032	NUT (LH only)	9		
	AN365-1032	NUT (RH only)	12		
	F5000-10-1032	NUT, Anchor (KNM) (75237) (LH only)	21		
	F5000-10-1032	NUT, Anchor (KNM) (75237) (RH only)	18		
	3600-02	NUT, Anchor (NUS) (80539)	1		
-16		SCREW (see figure 171 for details)	12		
	---*---				
-17	209-17511-9	. SHIM, Droop leading edge outer panel rubbing strip assembly LH (used on 209-17511-1 only)	1		
	209-17511-19	. SHIM, Droop leading edge outer panel rubbing strip assembly LH (used on 209-17511-11 only)	1		
	209-17511-10	. SHIM, Droop leading edge outer panel rubbing strip assembly RH	1		

SKIN ATTACHING PARTS (UPPER)

FIGURE & INDEX NO.	PART NUMBER	1 2 3 4 5 6 7 NOMENCLATURE	UNITS PER ASSY.	USABLE ON CODE	S/C NO.
6-1	AN509-10R6	SCREW (wing station 226.94)	1		
-2	AN509-10R6	SCREW (wing station 215.25)	1		
-3	7S27-10-12	SCREW, 100° flush head A-286 steel corrosion and heat-resistant (NA) (89372) (LH only)	1	ET	
	AN509-10R12	SCREW (RH only)	1	ET	
	2W18-10	WASHER, Flat (NA) (89372)	1	ET	
	AN363C1032	NUT (LH only)	1	ET	
	AN365-1032	NUT (RH only)	1	ET	
-4	7S27-10-13	SCREW, 100° flush head A-286 steel corrosion and heat-resistant (NA) (89372) (LH only)	1	ET	
	AN509-10R13	SCREW (RH only)	1	ET	
	2W18-10	WASHER, Flat (NA) (89372)	1	ET	
	AN363C1032	NUT (LH only)	1	ET	
	AN365-1032	NUT (RH only)	1	ET	
-5	7S27-10-16	SCREW, 100° flush head A-286 steel corrosion and heat-resistant (NA) (89372) (LH only)	2	ET	
	AN509-10R16	SCREW (RH only)	2	ET	
	2W18-10	WASHER, Flat (NA) (89372)	2	ET	
	AN363C1032	NUT (LH only)	2	ET	
	AN365-1032	NUT (RH only)	2	ET	
-6	AN509-10R15	SCREW (wing station 198.5)	1		
	2W18-10	WASHER, Flat (NA) (89372)	1		
	AN365-1032	NUT	1		
-7	AN509-10R11	SCREW (wing station 191.75)	1		
	2W18-10M	WASHER, Flat (NA) (89372)	1		
	AN365-1032	NUT	1		
-8	AN509-10R6	SCREW (wing station 183.63)	1		
-9	AN509-10R13	SCREW	10	ET	
	2W18-10	WASHER, Flat (NA) (89372)	10	ET	
	AN364-1032	NUT	10	ET	
-10	AN509-10R13	SCREW	2	FR	
	2W18-10	WASHER, Flat (NA) (89372)	2	FR	
	AN364-1032	NUT	2	FR	
-11	AN509-10R15	SCREW	7	FR	
	2W18-10	WASHER, Flat (NA) (89372)	7	FR	
	AN364-1032	NUT	7	FR	
-12	AN509-10R16	SCREW	4		
	2W18-10	WASHER, Flat (NA) (89372)	4		
	AN364-1032	NUT	4		
-13	AN509-10R18	SCREW	3		
	2W18-10	WASHER, Flat (NA) (89372)	3		
	AN364-1032	NUT	3		
-14	6950-S-06-7	DRIVE PIN, Blind rivet (DEU) (17419)	1		
-15	AN509-10R18	SCREW	1		
	2W18-10	WASHER, Flat (NA) (89372)	1		
	AN364-1032	NUT	1		
-16	AN509-10R16	SCREW	4		
	2W18-10	WASHER, Flat (NA) (89372)	4		
	AN364-1032	NUT	4		
-17	AN509-10R13	SCREW	8		
	2W18-10	WASHER, Flat (NA) (89372)	8		
	AN364-1032	NUT	8		
-18	AN509-10R15	SCREW	1		
	2W18-10	WASHER, Flat (NA) (89372)	1		
	AN364-1032	NUT	1		
-19	NAS334CPA11	BOLT	2		
	2W18-416	WASHER, Flat (NA) (89372)	2		
	AN364-428	NUT	2		
-20	7S13-428-22	SCREW 100° flush head corrosion-resistant (NA) (89372)	1		
	AN366F428	NUT PLATE	1		
-21	209-14502-3	SKIN, Upper outboard wing LH	1	ET	
	209-14512-3	SKIN, Upper outboard wing LH	1	FR	
	209-14502-4	SKIN, Upper outboard wing RH	1	ET	
	209-14512-4	SKIN, Upper outboard wing RH	1	FR	
-22	209-14506-1	TRAILING EDGE ASSEMBLY, Outboard wing LH	1	KN	442 ■
	209-14506-41	TRAILING EDGE ASSEMBLY, Outboard wing LH	1	KP	
	209-14506-2	TRAILING EDGE ASSEMBLY, Outboard wing RH	1	KN	442 ■
	209-14506-42	TRAILING EDGE ASSEMBLY, Outboard wing RH	1	KP	
	209-14567-1	. SKIN ASSEMBLY, Outboard wing trailing edge honeycomb LH	1	KN	
	209-14567-51	. SKIN ASSEMBLY, Outboard wing trailing edge honeycomb LH	1	KP	
	209-14567-2	. SKIN ASSEMBLY, Outboard wing trailing edge honeycomb RH	1	KN	
	209-14567-52	. SKIN ASSEMBLY, Outboard wing trailing edge honeycomb RH	1	KP	
	209-14564	. . INSERT, Honeycomb trailing edge rib riveting	36	KN	
	209-14564-3	. . INSERT, Honeycomb trailing edge rib riveting	36	KP	
-23	209-14572-1	OVERBOARD DRAIN ASSEMBLY, Outboard wing trailing edge LH	1		
	209-14572-2	OVERBOARD DRAIN ASSEMBLY, Outboard wing trailing edge RH	1		
-24	209-14502-13	SKIN, Upper outboard wing LH	1	ET	
	209-14512-13	SKIN, Upper outboard wing LH	1	FR	
-25	209-14514-3	SKIN, Upper outboard wing inboard LH	1	ET	
	209-14514-5	SKIN, Upper outboard wing inboard LH	1	FR	
	209-14514-4	SKIN, Upper outboard wing inboard RH	1	ET	
	209-14514-6	SKIN, Upper outboard wing inboard RH	1	FR	
-26	AN509-10R19	SCREW (wing station 175.02)	1		

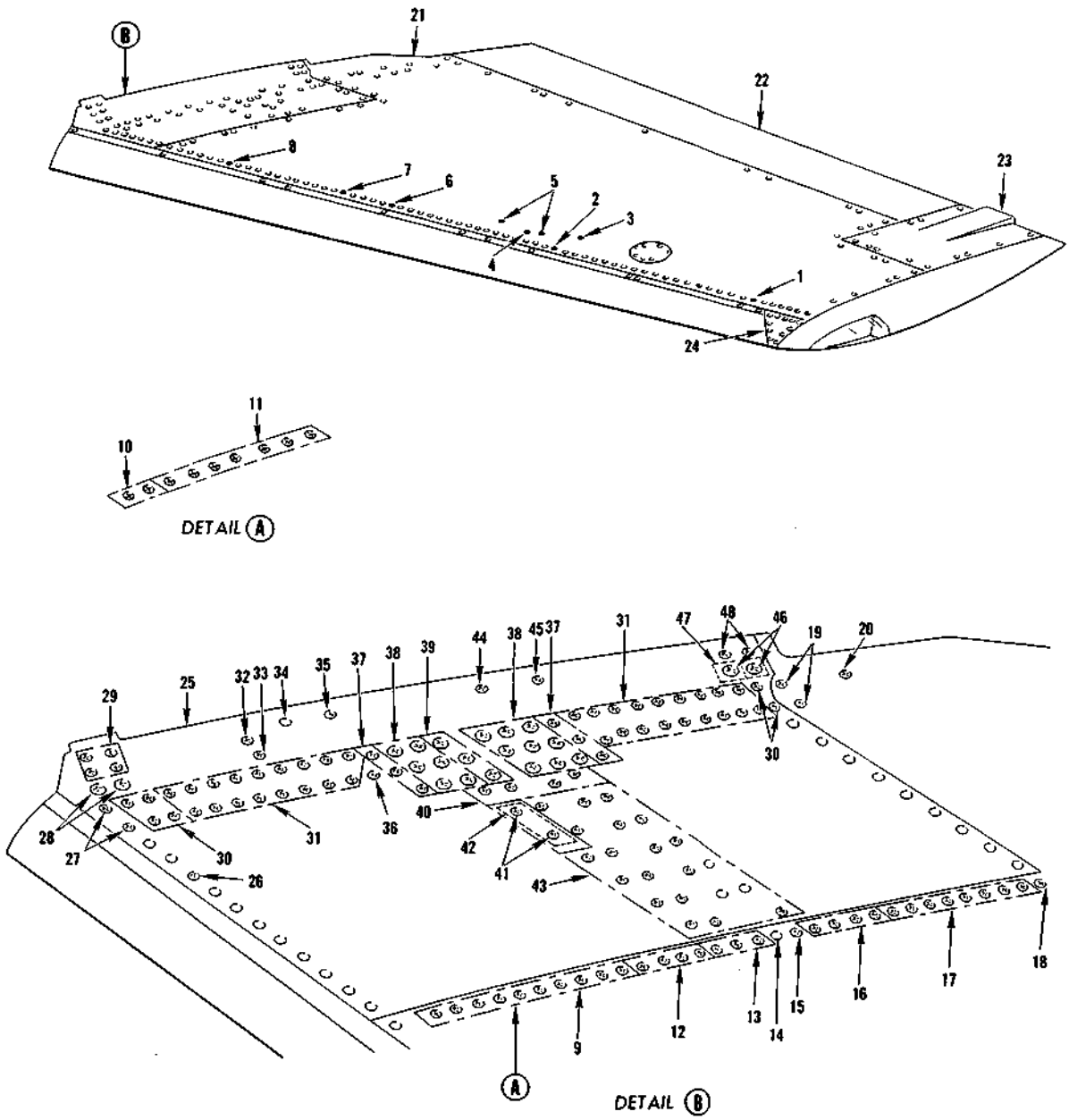

FIGURE 6 - SKIN ATTACHING PARTS (UPPER)

ACCESS DOORS, INSPECTION DOORS AND PANELS (UPPER)

FIGURE & INDEX NO.	PART NUMBER	1 2 3 4 5 6 7 NOMENCLATURE	UNITS PER ASSY.	USABLE ON CODE	S/C NO.
9-1	209-14183-1	DOOR ASSEMBLY, Wingfold hinge pin removal LH	1		
-2	209-14183-2	DOOR ASSEMBLY, Wingfold hinge pin removal RH	1		
	9C1-2-5	. CHAIN, Safety (NA) (89372)	1		
	2W18-3	. WASHER, Flat (NA) (89372)	1		
-3	AN509-10R9	SCREW	7		
	3610-02	NUT, Anchor (NUS) (80539)	1		
-4	AN509-10R6	SCREW (LH only) (89372)	11		
	3600-02	NUT, Anchor (NUS) (80539) (LH only)	17		
-5	AN509-10R6	SCREW (RH only)	9		
	3600-02	NUT, Anchor (NUS) (80539) (RH only)	15		
-6	209-14117-1	DOOR ASSEMBLY, Inboard wing aileron strut access LH	1		
	209-14117-2	DOOR ASSEMBLY, Inboard wing aileron strut access RH	1		
-7	98265-3-.290	. STUD (UC) (61864)	18		
	99836	. PIN (UC) (61864)	18		
-8	AN253-2-1400	. PIN	1		
-9	209-14117-3	. SKIN, Inboard wing aileron strut access door assembly LH	1		
	209-14117-4	. SKIN, Inboard wing aileron strut access door assembly RH	1		
-10	209-14149-1	. HINGE, Inboard wing aileron strut access door forward LH	1		
	209-14149-2	. HINGE, Inboard wing aileron strut access door forward RH	1		
-11	AN365-1032	. NUT	1		
-12	2W18-10M	. WASHER, Flat (NA) (89372)	1		
-13	10B1-3-3-6	. BONDING, Jumper (NA) (89372)	1		
-14	AN509-10R11	. SCREW	1		
-15	209-14148-1	. HINGE, Inboard wing aileron strut access door aft LH	1		
	209-14148-2	. HINGE, Inboard wing aileron strut access door aft RH	1		
-16	AN392-9	. PIN	1		
-17	209-14151	. HINGE, Inboard wing aileron strut access door support	1		
-18	209-14150	. SUPPORT, Inboard wing aileron strut access door	1		
-19	209-14126	SPRING, Tension	1		
-20	AN509-10R10	SCREW	2		
	4660-02	NUT, Dome (NUS) (80539)	2		
-21	209-14448-1	COVER ASSEMBLY, Wing center section rear spar hinge upper outboard LH	1		
	209-14448-2	COVER ASSEMBLY, Wing center section rear spar hinge upper outboard RH	1		
-22	AN509-10R10	SCREW	3		
	4660-02	NUT, Dome (NUS) (80539)	3		
-23	209-144114-1	COVER ASSEMBLY, Inboard wing rear spar hinge upper intermediate LH	1		
	209-144114-2	COVER ASSEMBLY, Inboard wing rear spar hinge upper intermediate RH	1		
-24	AN509-10R7	SCREW	2		
	3600-02	NUT, Anchor (NUS) (80539)	2		
-25	209-144121-1	DOOR ASSEMBLY, Inboard trailing edge deflector hinge pin LH	1		
	209-144121-2	DOOR ASSEMBLY, Inboard trailing edge deflector hinge pin RH	1		
-26	AN509-8R11	SCREW	3	ET	
	3600-82	NUT, Anchor (NUS) (80539)	3	ET	
-27	209-14464	DOOR ASSEMBLY, Wing rear spar hinge cover upper	1	ET	
-28	AN509-10R8	SCREW	10		
	3600-02	NUT, Anchor (NUS) (80539)	10		
-29	AN509-10R7	SCREW	14		
	3600-02	NUT, Anchor (NUS) (80539)	14		
-30	209-14498-1	DOOR ASSEMBLY, Access inboard trailing edge center and outboard LH	2		
	209-14498-2	DOOR ASSEMBLY, Access inboard trailing edge center and outboard RH	2		
-31	AN365-440	. NUT	1		
-32	2W18-4	. WASHER, Flat (NA) (89372)	1		
-33	9C1-3-4	. CHAIN, Safety (NA) (89372)	1		
-34	AN507-440R8	. SCREW	1		
-35	AN509-10R8	SCREW	5		
	3600-02	NUT, Anchor (NUS) (80539)	5		
-36	AN509-10R7	SCREW	7		
	3600-02	NUT, Anchor (NUS) (80539)	7		
-37	209-14494-1	DOOR ASSEMBLY, Access inboard trailing edge inboard LH	1		
	209-14494-2	DOOR ASSEMBLY, Access inboard trailing edge inboard RH	1		
-38	AN365-440	. NUT	1		
-39	2W18-4	. WASHER, Flat (NA) (89372)	1		
-40	9C1-3-2	. CHAIN, Safety (NA) (89372)	1		
-41	AN507-440R8	. SCREW	1		
-42	209-918004-33	DOOR, Flap subassembly LH (NA Dwg Design Spec)	1	HJ	
	209-18004-7	DOOR, Spoiler flap subassembly LH	1	FL	
	209-918004-34	DOOR, Flap subassembly RH (NA Dwg Design Spec)	1	HJ	
	209-18004-8	DOOR, Spoiler flap subassembly RH	1	FL	
-43	AN509-10R18	SCREW	1	FR	
	F1934-1032-6	NUT PLATE (KNM) (75237)	1	FR	
-44	7S29-10A-5	SCREW, Shear 100° flush hi-shear head close tolerance (NA)	1	FR	
	K3000-1032	NUT PLATE (KNM) (75237)	1	FR	
-45	AN509-10R6	SCREW	9	FR	
	F2000-10-1032	NUT PLATE (KNM) (75237)	9	FR	
-46	AN509-10R6	SCREW	5	FR	
	F5000-10-1032	NUT PLATE (KNM) (75237)	5	FR	
-47	AN509-10R6	SCREW	1	FL	
	F5000-10-1032	NUT PLATE (KNM) (75237)	1	FL	
-48	AN509-10R18	SCREW	14	FR	
	F5000-10-1032	NUT PLATE (KNM) (75237)	14	FR	

ACCESS DOORS, INSPECTION DOORS AND PANELS (LOWER)

FIGURE & INDEX NO.	PART NUMBER	1 2 3 4 5 6 7 NOMENCLATURE	UNITS PER ASSY.	USABLE ON CODE	S/C NO.
10-1	209-14184-1	DOOR ASSEMBLY, Wingfold lockpin access LH	1		
	209-14184-2	DOOR ASSEMBLY, Wingfold lockpin access RH	1		
		ATTACHING PARTS			
-2	AN509-10R10	SCREW	1		
	3610-02	NUT, Anchor (NUS) (80539) (interchangeable with 12LHA407-02 (EN) (72962))	1		
-3	AN509-10R10	SCREW	2		
	3600-02	NUT, Anchor (NUS) (80539)	2		
-4	AN509-10R12	SCREW	12		
	NAS463B-DD10	SHIM	6		
	NAS463C-DD10	SHIM	2		
	3600-02	NUT, Anchor (NUS) (80539)	12		
-5	AN509-10R12	SCREW	2		
	3610-02	NUT, Anchor (NUS) (80539) (interchangeable with 12LHA407-02 (EN) (72962))	2		
		---*---			
-6	9C1-2-7	. CHAIN, Safety (NA) (89372)	1		
	2W18-3	. WASHER, Flat (NA) (89372)	1		
-7	209-14182-1	DOOR ASSEMBLY, Wingfold lower access LH	1		476
	209-14182-2	DOOR ASSEMBLY, Wingfold lower access RH	1		476
		ATTACHING PARTS			
-8	AN509-10R12	SCREW	15	A	
	AN509-10R8	SCREW	15	B	
	3600-02	NUT, Anchor (NUS) (80539)	15		
-9	AN509-10R12	SCREW	1	A	
	AN509-10R8	SCREW	1	B	
	3610-02	NUT, Anchor (NUS) (80539) (interchangeable with 12LHA407-02 (EN) (72962))	1	A	
	3600-02	NUT, Anchor (NUS) (80539)	1	B	
		---*---			
-10	9C1-2-3	. CHAIN, Safety (NA) (89372)	1		476
	2W18-3	. WASHER, Flat (NA) (89372)	1		476
-11	209-14240-1	CLIP, Wing lower inboard skin stiffener fuselage station 262.457 LH	1	AW	
	209-14240-11	CLIP, Wing lower inboard skin stiffener fuselage station 262.457 LH	1	BY	
	209-14240-2	CLIP, Wing lower inboard skin stiffener fuselage station 262.457 RH	1	AW	
	209-14240-12	CLIP, Wing lower inboard skin stiffener fuselage station 262.457 RH	1	BY	
-12	AN509-10R12	SCREW	1	A	
	AN509-10R8	SCREW	1	B	
	AN3600-02	NUT, Anchor (NUS) (80539)	1		
-13	209-14247-1	ANGLE, Wing inboard lower skin sealing fuselage station 254.445 LH	1		
	209-14247-2	ANGLE, Wing inboard lower skin sealing fuselage station 254.445 RH	1		
-14	209-14449-1	COVER ASSEMBLY, Inboard rear spar hinge lower outboard LH	1	ET	
	209-14449-2	COVER ASSEMBLY, Inboard rear spar hinge lower outboard RH	1	ET	
-15	AN509-10R15	SCREW	2	ET	
	3600-02	NUT, Anchor (NUS) (80539)	2	ET	
-16	209-144111-1	COVER ASSEMBLY, Inboard rear spar hinge lower intermediate LH (superseded by 209-144101-1 for future procurement)	1	ET	
	209-144101-1	COVER, Inboard rear spar hinge lower intermediate assembly of LH (supersedes 209-144111-1 for future procurement)	1	ET	
	209-144111-2	COVER ASSEMBLY, Inboard rear spar hinge lower intermediate RH (superseded by 209-144101-2 for future procurement)	1	ET	
	209-144101-2	COVER, Inboard rear spar hinge lower intermediate assembly of RH (supersedes 209-144111-2 for future procurement)	1	ET	
-17	AN509-10R15	SCREW	2	ET	
	3600-02	NUT, Anchor (NUS) (80539)	2	ET	
-18	209-14484	DOOR ASSEMBLY, Inboard wing rear spar hinge cover lower	1		
-19	AN509-10R15	SCREW	5		
	3600-02	NUT, Anchor (NUS) (80539)	5		
-20	209-16084-3	DOOR, Aileron leading edge access LH	1		
	209-16084-4	DOOR, Aileron leading edge access RH	1		
-21	AN509-10R8	SCREW	3		
	3600-02	NUT, Anchor (NUS) (80539)	3		
-22	AN509-10R8	SCREW	2		
	3610-02	NUT, Anchor (NUS) (80539) (interchangeable with 12LHA407-02 (EN) (72962))	2		
-23	209-16002-29	CHAIN, Aileron structure assembly (leading edge access door) (make from 9C1-3-4 (NA) (89372)	1		
	2W18-4	WASHER, Flat (NA) (89372)	2		
-24	209-18064-1	DOOR ASSEMBLY, Access outboard flap and slot door hinge LH	1	ET	
	209-18064-2	DOOR ASSEMBLY, Access outboard flap and slot door hinge RH	1	ET	
		ATTACHING PARTS			
-25	AN509-10R13	SCREW	4	ET	
	NAS463F-DD10	SHIM	8	ET	
	2620-02	NUT, Anchor (NUS) (80539) (interchangeable with NAS684A3)	4	ET	
-26	AN509-10R13	SCREW	2	ET	
	NAS463F-DD10	SHIM	2	ET	
	2620-02	NUT, Anchor (NUS) (80539) (interchangeable with NAS684A3)	2	ET	
-27	AN509-10R13	SCREW	5	ET	
	2620-02	NUT, Anchor (NUS) (80539) (interchangeable with NAS684A3)	5	ET	
		---*---			
-28	9C1-3-3	. CHAIN, Safety (NA) (89372)	1	ET	
	2W18-4	. WASHER, Flat (NA) (89372)	1	ET	
-29	209-18063-1	DOOR ASSEMBLY, Access center slot door hinge LH	1	ET	
	209-18063-2	DOOR ASSEMBLY, Access center slot door hinge RH	1	ET	

ACCESS DOORS, INSPECTION DOORS AND PANELS (LOWER)

FIGURE & INDEX NO.	PART NUMBER	1 2 3 4 5 6 7 NOMENCLATURE	UNITS PER ASSY.	USABLE ON CODE	S/C NO.
10		ATTACHING PARTS			
-30	AN509-10R13	SCREW	2	ET	
	NAS463F-DD10	SHIM	4	ET	
	2620-02	NUT, Anchor (NUS) (80539) (interchangeable with NAS684A3)	2	ET	
-31	AN509-10R13	SCREW	2	ET	
	NAS463F-DD10	SHIM	2	ET	
	2620-02	NUT, Anchor (NUS) (80539) (interchangeable with NAS684A3)	2	ET	
-32	AN509-10R13	SCREW	5	ET	
	2620-02	NUT, Anchor (NUS) (80539) (interchangeable with NAS684A3)	5	ET	
		---*---			
-33	9C1-3-3	. CHAIN, Safety (NA) (89372)	1	ET	
	2W18-4	. WASHER, Flat (NA) (89372)	1	ET	
-34	209-18198-1	DOOR ASSEMBLY, Flap inboard hinge access LH	1	ET	
	209-18198-2	DOOR ASSEMBLY, Flap inboard hinge access RH	1	ET	
		ATTACHING PARTS			
-35	AN509-10R14	SCREW	6	ET	
	NAS463F-DD10	SHIM	12	ET	
	2620-02	NUT, Anchor (NUS) (80539) (interchangeable with NAS684A3)	6	ET	
-36	AN509-10R14	SCREW	1	ET	
	NAS463F-DD10	SHIM	2	ET	
	3610-02	NUT, Anchor (NUS) (80539) (interchangeable with 12LHA407-02 (EN) (72962))	1	ET	
-37	AN509-10R14	SCREW	2	ET	
	NAS463F-DD10	SHIM	2	ET	
	2620-02	NUT, Anchor (NUS) (80539) (interchangeable with NAS684A3)	2	ET	
-38	AN509-10R14	SCREW	2	ET	
	2620-02	NUT, Anchor (NUS) (80539) (interchangeable with NAS684A3)	2	ET	
		---*---			
-39	9C1-3-3	. CHAIN, Safety (NA) (89372)	1	ET	
	2W18-4	. WASHER, Flat (NA) (89372)	1	ET	
-40	209-14179	BLISTER, Landing gear door ream access LH (see figure 11 for additional breakdown)	1		
-41	209-14180-11	DOOR ASSEMBLY, Landing gear ream access LH (supersedes 209-14180-1 for future procurement)	1		
	209-14180-12	DOOR ASSEMBLY, Landing gear ream access RH (supersedes 209-14180-2 for future procurement)	1		
		ATTACHING PARTS			
-42	AN509-10R6	SCREW	2	RZ	
	RD205SB-5.5L	INSERT (ROSN) (83324)	2	RZ	
	RL24SB-7	RING (ROSN) (83324)	2	RZ	
-43	AN509-10R6	SCREW	4	RZ	
	RD205SB-5.5L	INSERT (ROSN) (83324)	1	RZ	
	RL24SB-7	RING (ROSN) (83324)	1	RZ	
-44	AN509-10R15	SCREW	1	RZ	
	2W18-10	WASHER, Flat (NA) (89372)	1	RZ	
	AN365-1032	NUT	1	RZ	
-45	AN509-10R11	SCREW	2	RZ	
	2W18-10	WASHER, Flat (NA) (89372)	2	RZ	
	AN365-1032	NUT	2	RZ	
-46	AN509-10R6	SCREW	2	SA	
	RD205SB-5.5L	INSERT (ROSN) (83324)	1	SA	
	RL24SB-7	RING (ROSN) (83324)	1	SA	
-47	AN509-10R15	SCREW	1	SA	
	2W18-10	WASHER, Flat (NA) (89372)	1	SA	
	AN365-1032	NUT	1	SA	
-48	NAS221-15	SCREW	1	SA	
	2W18-10	WASHER, Flat (NA) (89372)	1	SA	
	AN365-1032	NUT	1	SA	
-49	AN509-10R11	SCREW	1	SA	
	2W18-10	WASHER, Flat (NA) (89372)	1	SA	
	AN365-1032	NUT	1	SA	
-50	AN509-10R11	SCREW	2	SA	
	2W18-10	WASHER, Flat (NA) (89372)	2	SA	
	AN365-1032	NUT	2	SA	
		---*---			
-51	209-14179-3	BLISTER, Landing gear ream access door assembly LH	1		
	209-14179-4	BLISTER, Landing gear ream access door assembly RH	1		
	209-14180-5	. STIFFENER, Landing gear ream access door assembly (used on 209-14180-11 and 209-14180-12 only)	1		
-52	209-14267-1	DOOR ASSEMBLY, Wingfold pitot line drain (RH only)	1		
		ATTACHING PARTS			
-53	AN509-10R9	SCREW	1		
	3610-02	NUT, Anchor (NUS) (80539) (interchangeable with 12LHA407-02 (EN) (72962))	1		
-54	AN509-10R10	SCREW	2		
	3600-02	NUT, Anchor (NUS) (80539)	2		
		---*---			
-55	9C1-2-5	. CHAIN, Safety (NA) (89372)	1		
	2W18-3	. WASHER, Flat (NA) (89372)	1		
-56	209-14462	DOOR, Inboard wing trailing edge outboard access	1	ET	
		ATTACHING PARTS			
-57	AN3-4A	BOLT	2	ET	
	2W18-10M	WASHER, Flat (NA) (89372)	2	ET	
		---*---			

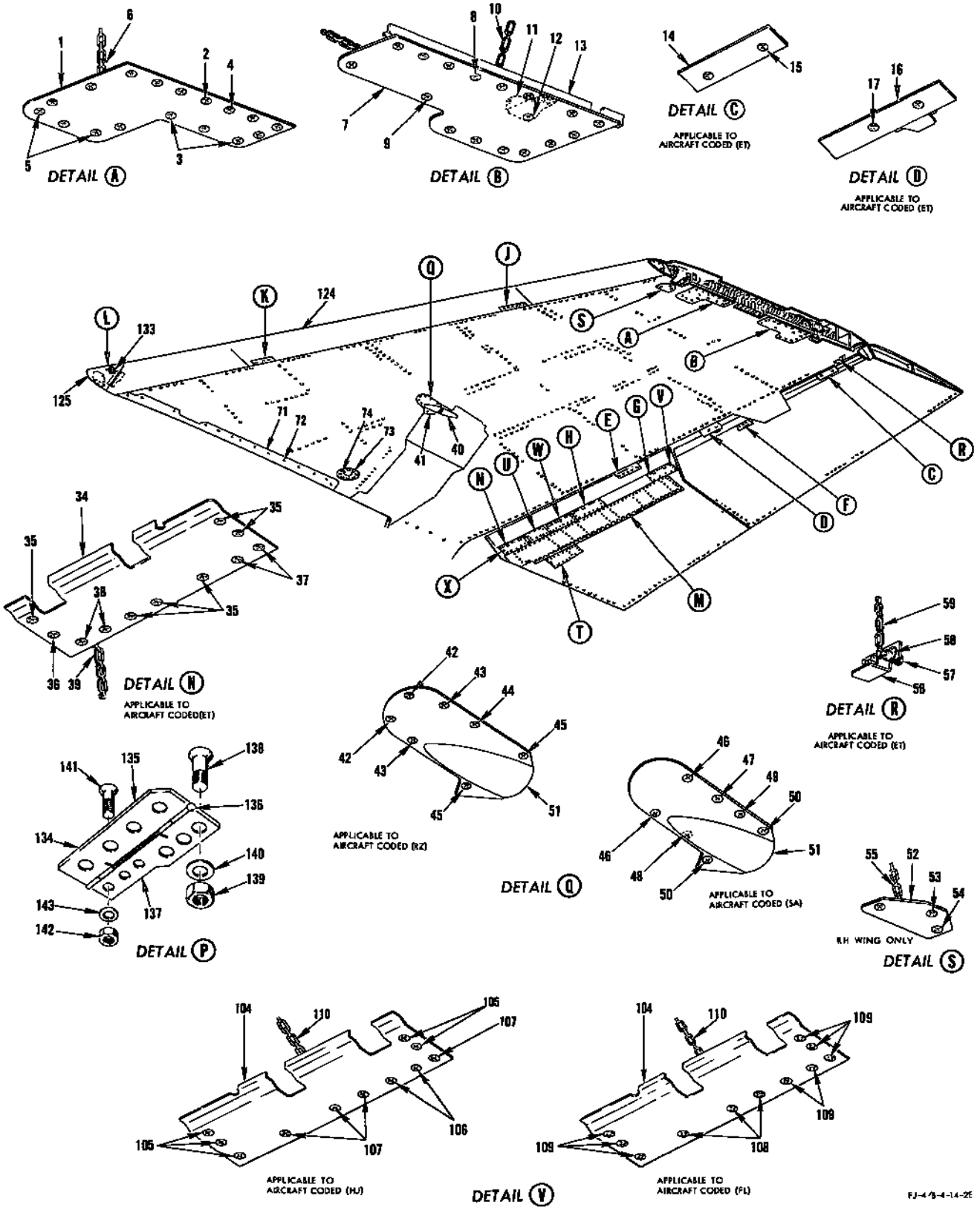

FIGURE 10 - ACCESS DOORS, INSPECTION DOORS AND PANELS (LOWER) (Sheet 1)

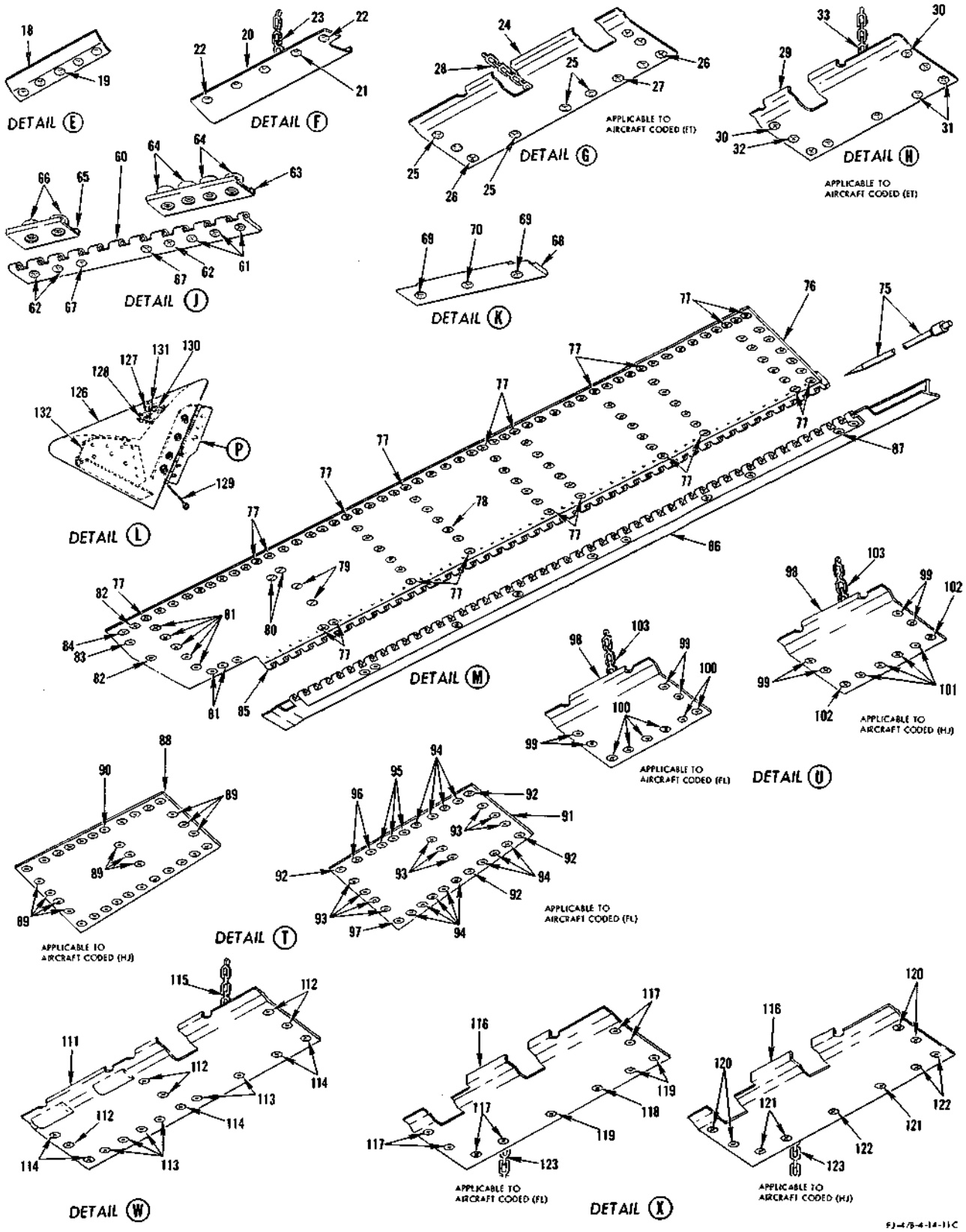

FIGURE 10 - ACCESS DOORS, INSPECTION DOORS AND PANELS (LOWER) (Sheet 2)

ACCESS DOORS, INSPECTION DOORS AND PANELS (LOWER)

FIGURE & INDEX NO.	PART NUMBER	1 2 3 4 5 6 7 NOMENCLATURE	UNITS PER ASSY.	USABLE ON CODE	S/C NO.
10-58	22A5-02	. NUT, Anchor (EN) (72962)	2	ET	
-59	9C1-2-3	. CHAIN, Safety (NA) (89372)	1	ET	
	2W18-3	. WASHER, Flat (NA) (89372)	1	ET	
-60	209-17056-1	HINGE, Removable droop nose leading edge inner panel inner LH (magnetic-inspected)	1		
	209-17056-2	HINGE, Removable droop nose leading edge inner panel inner RH (magnetic-inspected)	1		
	ATTACHING PARTS				
-61	AN509-416R15	SCREW	3		
-62	AN509-416R16	SCREW	3		
-63	209-48781-1	NUT PLATE ASSEMBLY, Special stores emergency release return spring support	1		
	209-48781-3	. CHANNEL, Special stores emergency release return spring support nut-plate assembly	1		
-64	22G1-048	. NUT, Channel (EN) (72962)	4		
-65	209-48781-11	NUT PLATE ASSEMBLY, Special stores emergency release return spring support	1		
	209-48781-5	. CHANNEL, Special stores emergency release return spring support nut-plate assembly	1		
-66	22G1-048	. NUT, Channel (EN) (72962)	2		
-67	AN509-416R16	SCREW	2		
	3610-048	NUT, Anchor (NUS) (80539)	2		
	---*---				
-68	209-17026-1	DOOR, Droop nose leading edge inner panel inner hinge pin	1	A	
	209-17026-3	DOOR, Droop nose leading edge inner panel inner hinge pin	1	B	
	ATTACHING PARTS				
-69	NAS334CPA7	BOLT	2		
	NA2648-048	NUT, Anchor (EN) (72962)	2		
-70	NAS334CPA7	BOLT	1		
	NA2647-048	NUT, Anchor (EN) (72962)	1		
	---*---				
-71	209-10027-1	DOOR ASSEMBLY, Wing station 32.219 at fuselage lower LH	1	A	
	209-10027-31	DOOR ASSEMBLY, Wing station 32.219 at fuselage lower LH	1	B	
	209-10027-2	DOOR ASSEMBLY, Wing station 32.219 at fuselage lower RH	1	A	
	209-10027-32	DOOR ASSEMBLY, Wing station 32.219 at fuselage lower RH	1	B	
-72	AN509-10R10	SCREW	12		
	NAS463B-DD10	SHIM	12		
	3600-02	NUT, Anchor (NUS) (80539)	12		
-73	209-48817	COVER PLATE ASSEMBLY, Wing fuel pump access provision	1		
	ATTACHING PARTS				
-74	HT4M-8	BOLT (HIS) (73197)	10		
	MS29513-10	PACKING	10		
	MS29513-250	PACKING	1		
	NA2648-048	NUT, Anchor (EN) (72962)	10		
	---*---				
	209-48817-3	. COVER PLATE, Wing fuel pump access provision	1		
	MS29513-125	. PACKING	1		
	2772	. DRAIN VALVE ASSEMBLY (KOE) (75361)	1		
-75	2P7-13-50-7/8	PIN ASSEMBLY, Hinge (NA) (89372)	1	FR	
-76	209-18009-1	DOOR, Access spoiler mechanism assembly of LH	1	FR	
	209-18009-2	DOOR, Access spoiler mechanism assembly of RH	1	FR	
	ATTACHING PARTS				
-77	AN509-10R13	SCREW	21	FR	
	K3000-1032	NUT, Anchor (KNM) (75237)	21	FR	
-78	AN509-10R13	SCREW	68	FL	
	F1934-1032-4	NUT, Anchor (KNM) (75237)	68	FL	
	AN509-10R13	SCREW	80	HJ	
	F1934-1032-4	NUT, Anchor (KNM) (75237)	80	HJ	
-79	7S29-416A3	SCREW, Shear 100° flush hi-shear head close tolerance (NA) (89372)	2	FR	
	F5000-10-428	NUT, Anchor (KNM) (75237)	2	FR	
-80	7S29-416A3	SCREW, Shear 100° flush hi-shear head close tolerance (NA) (89372)	2	FR	
	F2000-10-428	NUT, Anchor (KNM) (75237)	2	FR	
-81	AN509-10R13	SCREW	7	FR	
	F1934-1032-2	NUT, Anchor (KNM) (75237)	7	FR	
-82	AN509-10R10	SCREW	2	FR	
	2W18-10	WASHER, Flat (NA) (89372)	2	FR	
	AN365-1032	NUT	2	FR	
-83	AN509-10R12	SCREW	1	FR	
	2W18-10	WASHER, Flat (NA) (89372)	1	FR	
	AN365-1032	NUT	1	FR	
-84	AN509-10R13	SCREW	1	FR	
	2W18-10	WASHER, Flat (NA) (89372)	1	FR	
	AN365-1032	NUT	1	FR	
	---*---				
-85	209-18030-5	. HINGE, Flap spoiler mechanism access door LH	1	FR	
	209-18030-6	. HINGE, Flap spoiler mechanism access door RH	1	FR	
-86	209-18030-3	HINGE, Flap spoiler mechanism access door LH	1	FR	
	209-18030-4	HINGE, Flap spoiler mechanism access door RH	1	FR	
	ATTACHING PARTS				
-87	F164-5	JO-BOLT (National Screw and Manufacturing Company of California) (98524)	10	FR	
	---*---				
-88	209-918004-27	DOOR, Flap assembly complete LH (rework drawing)	1	HJ	
	209-918004-28	DOOR, Flap assembly complete RH (rework drawing)	1	HJ	
	ATTACHING PARTS				
-89	7S29-10A5	SCREW, Shear 100° flush hi-shear head close tolerance (NA) (89372)	10	HJ	
	F1934-1032-4	NUT, Anchor (KNM) (75237)	10	HJ	

ACCESS DOORS, INSPECTION DOORS AND PANELS (LOWER)

FIGURE & INDEX NO.	PART NUMBER	1 2 3 4 5 6 7 NOMENCLATURE	UNITS PER ASSY.	USABLE ON CODE	S/C NO.
10-90	7S29-10A5	SCREW, Shear 100° flush hi-shear head close tolerance (NA) (89372)	22	HJ	
	F1934-1032-2	NUT, Anchor (KNM) (75237)	22	HJ	
		---*---			
-91	209-18004-61	DOOR, Spoiler flap assembly of LH	1	FL	
	209-18004-62	DOOR, Spoiler flap assembly of RH	1	FL	
		ATTACHING PARTS			
-92	7S29-10A5	SCREW, Shear 100° flush hi-shear head close tolerance (NA) (89372)	4	FL	
	F2000-10-1032	NUT, Anchor (KNM) (75237)	4	FL	
-93	7S29-10A5	SCREW, Shear 100° flush hi-shear head close tolerance (NA) (89372)	10	FL	
	F1934-1032-4	NUT, Anchor (KNM) (75237)	10	FL	
-94	7S29-10A5	SCREW, Shear 100° flush hi-shear head close tolerance (NA) (89372)	12	FL	
	F1934-1032-2	NUT, Anchor (KNM) (75237)	12	FL	
-95	7S29-10A5	SCREW, Shear 100° flush hi-shear head close tolerance (NA) (89372)	3	FL	
	F5000-10-1032	NUT, Anchor (KNM) (75237)	3	FL	
-96	7S29-10A5	SCREW, Shear 100° flush hi-shear head close tolerance (NA) (89372)	2	FL	
	K2000-1032	NUT, Anchor (KNM) (75237)	2	FL	
-97	7S29-10A5	SCREW, Shear 100° flush hi-shear head close tolerance (NA) (89372)	1	FL	
	NAS698A3	NUT, Anchor	1	FL	
		---*---			
-98	209-18143-11	DOOR, Access machine flap rib assembly of LH	1	FR	
	209-18143-12	DOOR, Access machine flap rib assembly of RH	1	FR	
		ATTACHING PARTS			
-99	AN509-10R13	SCREW	4	FR	
	F1934-1032-2	NUT, Anchor (KNM) (75237)	4	FR	
-100	AN509-10R13	SCREW	6	FL	
	K3000-1032	NUT, Anchor (KNM) (75237)	6	FL	
-101	AN509-10R13	SCREW	4	HJ	
	F1934-1032-6	NUT, Anchor (KNM) (75237)	4	HJ	
-102	AN509-10R13	SCREW	2	HJ	
	K3100-1032	NUT, Anchor (KNM) (75237)	2	HJ	
		---*---			
-103	9C1-3-3	. CHAIN, Safety (NA) (89372)	1	FR	
	2W18-4	. WASHER, Flat (NA) (89372)	1	FR	
-104	209-18135-1	DOOR, Access outboard flap and slot door hinge assembly of LH	1	FR	
	208-18135-2	DOOR, Access outboard flap and slot door hinge assembly of RH	1	FR	
		ATTACHING PARTS			
-105	AN509-10R12	SCREW	5	HJ	
	K3100-1032	NUT, Anchor (KNM) (75237)	5	HJ	
-106	AN509-10R12	SCREW	2	HJ	
	F1934-1032-2	NUT, Anchor (KNM) (75237)	2	HJ	
-107	AN509-10R12	SCREW	4	HJ	
	F1934-1032-4	NUT, Anchor (KNM) (75237)	4	HJ	
-108	AN509-10R12	SCREW	3	FL	
	F1934-1032-4	NUT, Anchor (KNM) (75237)	3	FL	
-109	AN509-10R12	SCREW	8	FL	
	K3000-1032	NUT, Anchor (KNM) (75237)	8	FL	
		---*---			
-110	9C1-3-3	. CHAIN, Safety (NA) (89372)	1	FR	
	2W18-4	. WASHER, Flat (NA) (89372)	1	FR	
-111	209-18136-11	DOOR, Access center slot door hinge assembly of LH	1	FR	
	209-18136-12	DOOR, Access center slot door hinge assembly of RH	1	FR	
		ATTACHING PARTS			
-112	AN509-10R13	SCREW	5	FR	
	F1934-1032-2	NUT, Anchor (KNM) (75237)	5	FR	
-113	AN509-10R13	SCREW	6	FR	
	F1934-1032-6	NUT, Anchor (KNM) (75237)	6	HJ	
	F1934-1032-4	NUT, Anchor (KNM) (75237)	6	FL	
-114	AN509-10R13	SCREW	5	FR	
	K3100-1032	NUT, Anchor (KNM) (75237)	5	HJ	
	K3000-1032	NUT, Anchor (KNM) (75237)	5	FL	
		---*---			
-115	9C1-3-3	. CHAIN, Safety (NA) (89372)	1	FR	
	2W18-4	. WASHER, Flat (NA) (89372)	1	FR	
-116	209-18152-1	DOOR, Flap inboard hinge access nose assembly of LH	1	FR	
	209-18152-2	DOOR, Flap inboard hinge access nose assembly of RH	1	FR	
		ATTACHING PARTS			
-117	AN509-10R13	SCREW	6	FL	
	F1934-1032-2	NUT, Anchor (KNM) (75237)	6	FL	
-118	AN509-10R13	SCREW	1	FL	
	F1934-1032-4	NUT, Anchor (KNM) (75237)	1	FL	
-119	AN509-10R13	SCREW	3	FL	
	K3000-1032	NUT, Anchor (KNM) (75237)	3	FL	
-120	AN509-10R15	SCREW	4	HJ	
	F1934-1032-4	NUT, Anchor (KNM) (75237)	4	HJ	
-121	AN509-10R15	SCREW	3	HJ	
	F1934-1032-6	NUT, Anchor (KNM) (75237)	3	HJ	
-122	AN509-10R15	SCREW	3	HJ	
	K3100-1032	NUT, Anchor (KNM) (75237)	3	HJ	
		---*---			
-123	9C1-3-3	. CHAIN, Safety (NA) (89372)	1	FR	
	2W18-4	. WASHER, Flat (NA) (89372)	1	FR	
-124	209-14226-1	*1 LEADING EDGE ASSEMBLY, Inboard wing root LH	1		
	209-14038-1	*1 LEADING EDGE ASSEMBLY, Inboard wing LH	1		
	209-14226-2	*2 LEADING EDGE ASSEMBLY, Inboard wing root RH	1		

ACCESS DOORS, INSPECTION DOORS AND PANELS (LOWER)

FIGURE & INDEX NO.	PART NUMBER		1	2	3	4	5	6	7	NOMENCLATURE	UNITS PER ASSY.	USABLE ON CODE	S/C NO.
10	209-14038-2	*2	LEADING EDGE ASSEMBLY, Inboard wing RH								1		
-125	209-14038-31		.	LEADING EDGE SUBASSEMBLY, Inboard wing LH (used on 209-14038-1 only)							1		
	209-14038-32		.	LEADING EDGE SUBASSEMBLY, Inboard wing RH (used on 209-14038-2 only)							1		
-126	209-14036-1	*3	.	.	DOOR, Leading edge ammunition bay clearance LH						1		
	209-14036-2	*3	.	.	DOOR, Leading edge ammunition bay clearance RH						1		
	209-14230-1	*4	.	.	DOOR, Leading edge ammunition bay clearance LH						1		
	209-14230-2	*4	.	.	DOOR, Leading edge ammunition bay clearance RH						1		
-127	AN509-10-13	*3	.	.	SCREW						2		
	2W17-10	*3	.	.	WASHER, Flat (NA) (89372)						2		
	AN365-1032	*3	.	.	NUT						2		
-128	AN509-8-10	*4	.	.	SCREW						2		
	2W18-8	*4	.	.	WASHER, Flat (NA) (89372)						4		
	AN365-832	*4	.	.	NUT						2		
-129	AN749-1-4	*4	.	.	JUMPER						1		
-130	209-14234-3		.	.	LATCH PLATE, Leading edge ammunition bay clearance door outer LH						1		
	209-14234-4		.	.	LATCH PLATE, Leading edge ammunition bay clearance door outer RH						1		
-131	209-14163-3		.	.	LATCH PLATE, Leading edge ammunition bay clearance door inner LH						1		
	209-14163-4		.	.	LATCH PLATE, Leading edge ammunition bay clearance door inner RH						1		
-132	209-14033-1	*3	.	.	RIB ASSEMBLY, Ammunition bay clearance door fuselage mold line closeout LH						1		
	209-14033-2	*3	.	.	RIB ASSEMBLY, Ammunition bay clearance door fuselage mold line closeout RH						1		
-133	209-14022-21		.	.	LATCH ASSEMBLY, Leading edge ammunition bay clearance door LH (supersedes 209-14022-1 for future procurement) (209-14022-1 used on 209-14226-1 only)						1		
	209-14022-22		.	.	LATCH ASSEMBLY, Leading edge ammunition bay clearance door RH (supersedes 209-14022-2 for future procurement) (209-14022-2 used on 209-14226-2 only)						1		
	209-14031	*3	.	.	SPRING, Compression						1		
	209-14023	*4	.	.	SPRING, Leading edge ammunition bay clearance door latch						1		
-134	209-14032-5	*3	.	HINGE, Ammunition bay clearance door LH							1		
	209-14032-6	*3	.	HINGE, Ammunition bay clearance door RH							1		
-135	209-14039	*3	.	SPRING, Leading edge ammunition bay access door							1		
-136	209-14038-11	*3	.	PIN, Inboard wing leading edge subassembly							1		
-137	209-14032-3	*3	.	HINGE, Ammunition bay clearance door LH							1		
	209-14032-4	*3	.	HINGE, Ammunition bay clearance door RH							1		
-138	AN509-10R12	*3	.	SCREW							7		
-139	AN364-1032	*3	.	NUT							7		
-140	2W18-10	*3	.	WASHER, Flat (NA) (89372)							7		
-141	AN509-8R12	*3	.	SCREW							3		
-142	AN364-832	*3	.	NUT							3		
-143	2W18-8	*3	.	WASHER, Flat (NA) (89372)							3		

NOTE: *1 209-14038-1 supersedes 209-14226-1 for future procurement. See figure 18 for additional breakdown.

*2 209-14038-2 supersedes 209-14226-2 for future procurement. See figure 18 for additional breakdown.

*3 Used on 209-14038-31 and/or 209-14038-32 only.

*4 Used on 209-14226-1 and/or 209-14226-2 only.

SKIN ATTACHING PARTS (UPPER)

FIGURE & INDEX NO.	PART NUMBER	1 2 3 4 5 6 7 NOMENCLATURE	UNITS PER ASSY.	USABLE ON CODE	S/C NO.
14	EB-048	NUT (EN) (72962)	1		
-216	MS20004-41	BOLT	1		
	2W10-4	WASHER, Countersunk (NA) (89372) (use under bolthead)	1		
	2W18-4	WASHER, Flat (NA) (89372) (use under nut)	1		
	EB-048	NUT (EN) (72962)	1		
-217	MS20004-27	BOLT	4		
	2W10-4	WASHER, Countersunk (NA) (89372) (use under bolthead)	4		
	2W18-4	WASHER, Flat (NA) (89372) (use under nut)	4		
	EB-048	NUT (EN) (72962)	4		
-218	MS20004-40	BOLT	2		
	2W10-4	WASHER, Countersunk (NA) (89372) (use under bolthead)	2		
	2W18-4	WASHER, Flat (NA) (89372) (use under nut)	2		
	EB-048	NUT (EN) (72962)	2		
-219	MS20004-31	BOLT	1		
	2W10-4	WASHER, Countersunk (NA) (89372) (use under bolthead)	1		
-220	MS20004-26	BOLT	3		
	2W10-4	WASHER, Countersunk (NA) (89372) (use under bolthead)	3		
-221	MS20004-30	BOLT	1		
	2W10-4	WASHER, Countersunk (NA) (89372) (use under bolthead)	1		
-222	MS20004-26	BOLT	8		
	2W10-4	WASHER, Countersunk (NA) (89372) (use under bolthead)	8		
-223	MS20004-27	BOLT	8		
-224	NAS464P4A	BOLT	3		
	2W18-416	WASHER, Flat (NA) (89372) (use under bolthead)	3		
-225	MS20004-26	BOLT	3		
	2W10-4	WASHER, Countersunk (NA) (89372) (use under bolthead)	3		
	2W18-416	WASHER, Flat (NA) (89372) (use under nut)	3		
	EB-048	NUT (EN) (72962)	3		
-226	MS20004-10	BOLT	3		
	2W10-4	WASHER, Countersunk (NA) (89372) (use under bolthead)	3		
	2W18-416	WASHER, Flat (NA) (89372) (use under nut)	3		
	EB-048	NUT (EN) (72962)	3		
-227	MS20004-11	BOLT	1		
	2W10-4	WASHER, Countersunk (NA) (89372) (use under bolthead)	1		
	2W18-416	WASHER, Flat (NA) (89372) (use under nut)	1		
	EB-048	NUT (EN) (72962)	1		
-228	MS20004-11	BOLT (LH only)	2		
	MS20004-10	BOLT (RH only)	2		
-229	HT6M-11	BOLT (HIS) (73197)	1		
-230	HT8M-17	BOLT (HIS) (73197)	2		
	2W18-816	WASHER, Flat (NA) (89372)	2		
	EB-080	NUT (EN) (72962)	2		
-231	HT4M-11	BOLT (HIS) (73197)	5		
	2W18-416	WASHER, Flat (NA) (89372)	5		
	K1910-428	NUT (KNM) (75237)	5		
-232	HT4M-10	BOLT (HIS) (73197)	12		
	2W18-416	WASHER, Flat (NA) (89372)	12		
	K1910-428	NUT (KNM) (75237)	12		
-233	HT4M-9	BOLT (HIS) (73197)	8		
	2W18-416	WASHER, Flat (NA) (89372)	8		
	K1910-428	NUT (KNM) (75237)	8		
-234	HT5M-9	BOLT (HIS) (73197)	7		
	2W18-516	WASHER, Flat (NA) (89372)	7		
	K1910-524	NUT (KNM) (75237)	7		
-235	HT5M-8	BOLT (HIS) (73197)	13		
	2W18-516	WASHER, Flat (NA) (89372)	13		
	K1910-524	NUT (KNM) (75237)	13		
-236	HT7M-16	BOLT (HIS) (73197)	2		
	2W18-716	WASHER, Flat (NA) (89372)	2		
	EB-070	NUT (EN) (72962)	2		
-237	HT8M-16	BOLT (HIS) (73197)	2		
	2W18-816	WASHER, Flat (NA) (89372)	2		
	EB-080	NUT (EN) (72962)	2		
-238	HT7M-9	BOLT (HIS) (73197)	2		
	MS29513-14	PACKING	2		
-239	HT4M-7	BOLT (HIS) (73197)	2		
	MS29513-10	PACKING	2		
-240	HT6M-6	BOLT (HIS) (73197)	1		
	2W18-616	WASHER, Flat (NA) (89372)	1		
	52-1571B-064	NUT (EN) (72962)	1		
-241	HT4M-9	BOLT (HIS) (73197)	2		
	2W18-416	WASHER, Flat (NA) (89372)	2		
	K1910-428	NUT (KNM) (75237)	2		
-242	HT5M-9	BOLT (HIS) (73197)	56		
	2W18-516	WASHER, Flat (NA) (89372)	56		
	EB-054	NUT (EN) (72962)	1		
	K1910-524	NUT (KNM) (75237)	55		
-243	HT4M-4	BOLT (HIS) (73197)	11		
	MS29513-10	PACKING	11		
-244	HT4M-4	BOLT (HIS) (73197)	6		
	MS29513-10	PACKING	6		
-245	HT4M-6	BOLT (HIS) (73197)	5		
	MS29513-10	PACKING	5		

SKIN ATTACHING PARTS (UPPER)

FIGURE & INDEX NO.	PART NUMBER	1 2 3 4 5 6 7 NOMENCLATURE	UNITS PER ASSY.	USABLE ON CODE	S/C NO.
14-246	HT4M-7	BOLT (HIS) (73197)	10		
	MS29513-10	PACKING	10		
-247	HS52P-8-5	BOLT (HIS) (73197) (LH only)	11		
	HS52P-8-5	BOLT (HIS) (73197) (RH only)	13		
	HS15-8	COLLAR (HIS) (73197) (LH only)	11		
	HS15-8	COLLAR (HIS) (73197) (RH only)	13		
-248	HS52P-8-6	BOLT (HIS)	13		
	HS15-8	COLLAR (HIS) (73197)	13		
-249	HT5M-9	BOLT (HIS) (73197)	1		
	2W18-516	WASHER, Flat (NA) (89372)	2		
	AN363-524	NUT	1		
-250	HS52P-8-8	BOLT (HIS) (73197)	1		
	HS15-8	COLLAR (HIS) (73197)	1		
-251	HS52P-8-7	BOLT (HIS) (72197)	1		
	HS15-8	COLLAR (HIS) (73197)	1		
-252	HS52P-8-7	BOLT (HIS) (73197) (LH only)	1		
	HS15-8	COLLAR (HIS) (73197) (LH only)	1		
-253	HS51P-8-6	BOLT (HIS) (73197)	1		
	HS15-8	COLLAR (HIS) (73197)	1		
-254	HS51P-8-5	BOLT (HIS) (73197)	2		
	HS15-8	COLLAR (HIS) (73197)	2		
-255	HS51P-8-5	BOLT (HIS) (73197) (LH only)	1		
	HS51P-8-6	BOLT (HIS) (73197) (RH only)	1		
	HS15-8	COLLAR (HIS) (73197)	1		
-256	HS51P-8-6	BOLT (HIS) (73197) (LH only)	1		
	HS51P-8-5	BOLT (HIS) (73197) (RH only)	1		
	HS15-8	COLLAR (HIS) (73197)	1		
-257	209-52679	CLIP, Leading edge flexible shaft (LH only)	15		
	209-52679	CLIP, Leading edge flexible shaft (RH only)	14		
	209-52679-11	CLIP, Leading edge flexible shaft (RH only)	1		
-258	209-52624	SUPPORT, Wing leading edge flexible shaft)	1		
-259	HT4M-8	BOLT (HIS) (73197)	10		
	MS29513-10	PACKING	10		
-260	HT4M-6	BOLT (HIS) (73197)	5		
	MS29513-10	PACKING	5		
-261	HT4M-4	BOLT (HIS) (73197)	8		
	MS29513-10	PACKING	8		
-262	HT4M-9	BOLT (HIS) (73197)	3		
	MS29513-10	PACKING	3		
-263	HT6M-9	BOLT (HIS) (73197)	1		
	MS29513-12	PACKING	1		
-264	HT6M-12	BOLT (HIS) (73197)	1		
	2W18-616	WASHER, Flat (NA) (89372)	1		
	52-1571B-064	NUT (EN) (72962)	1		
-265	HT5M-12	BOLT (HIS) (73197)	14		
	2W18-516	WASHER, Flat (NA) (89372)	14		
	EB-054	NUT (EN) (72962)	1		
	K1910-524	NUT (KNM) (75237)	13		
-266	HT5M-13	BOLT (HIS) (73197)	8		
	2W18-516	WASHER, Flat (NA) (89372)	8		
	K1910-524	NUT (KNM) (75237)	8		
-267	HT4M-9	BOLT (HIS) (73197)	2		
	MS29513-10	PACKING	2		
-268	HT4M-7	BOLT (HIS) (73197)	9		
	MS29513-10	PACKING	9		
-269	HT4M-8	BOLT (HIS) (73197)	5		
	MS29513-10	PACKING	5		
-270	HT4M-6	BOLT (HIS) (73197)	5		
	MS29513-10	PACKING	5		
-271	HT5M-9	BOLT (HIS) (73197)	5		
	MS29513-11	PACKING	5		
-272	HT5M-10	BOLT (HIS) (73197)	6		
	MS29513-11	PACKING	6		
-273	HT5M-11	BOLT (HIS) (73197)	5		
	MS29513-11	PACKING	5		
-274	HT7M-23	BOLT (HIS) (73197)	3		
	MS29513-14	PACKING	3		
-275	HT7M-14	BOLT (HIS) (73197)	14		
	MS29513-14	PACKING	9		
-276	HT7M-18	BOLT (HIS) (73197)	2		
-277	HT6M-9	BOLT (HIS) (73197)	1		
	MS29513-12	PACKING	1		
-278		MAIN LANDING GEAR TRUNNION (see figure 24 for breakdown)			
-279		SPLICE PLATES (see figure 23 for breakdown)			
-280	191-14884	SCREW, Sealant injection hole plug	31		
	PK79XZ-6-4	SCREW, Injection (PK) (45722)	229		
-281	244-14010-3	RUBBING STRIP, Inboard wing trailing edge LH	1	SL	504
	244-14010-4	RUBBING STRIP, Inboard wing trailing edge RH	1	SL	504

SKIN ATTACHING PARTS (LOWER)

FIGURE & INDEX NO.	PART NUMBER	1 2 3 4 5 6 7 NOMENCLATURE	UNITS PER ASSY.	USABLE ON CODE	S/C NO.
15-164	HT4M-11	BOLT (HIS) (73197)	1		
	MS29513-10	PACKING	1		
-165	HT4M-10	BOLT (HIS) (73197)	1		
-166	MS29513-10	PACKING	1		
-166	HT5M-9	BOLT (HIS) (73197)	2		
	MS29513-11	PACKING	2		
-167	HT5M-11	BOLT (HIS) (73197)	15		
	MS29513-11	PACKING	15		
-168	HT5M-9	BOLT (HIS) (73197)	1		
	MS29513-11	PACKING	1		
-169	HT5M-10	BOLT (HIS) (73197)	1		
	MS29513-11	PACKING	1		
-170	HT4M-11	BOLT (HIS) (73197)	1		
	MS29513-10	PACKING	1		
-171	HT4M-12	BOLT (HIS) (73197)	1		
	MS29513-10	PACKING	1		
-172	HT4M-13	BOLT (HIS) (73197)	2		
	MS29513-10	PACKING	2		
-173	HT4M-14	BOLT (HIS) (73197)	1		
	MS29513-10	PACKING	1		
-174	HT4M-15	BOLT (HIS) (73197)	1		
	MS29513-10	PACKING	1		
-175	HT4M-15	BOLT (HIS) (73197)	1		
	MS29513-10	PACKING	1		
-176	HT4M-17	BOLT (HIS) (73197)	1		
	MS29513-10	PACKING	1		
-177	HT5M-17	BOLT (HIS) (73197)	1		
	MS29513-11	PACKING	1		
-178	HT5M-19	BOLT (HIS) (73197)	1		
	MS29513-11	PACKING	1		
-179	HT6M-29	BOLT (HIS) (73197)	1		
-180	HT6M-27	BOLT (HIS) (73197)	1		
-181	HT6M-25	BOLT (HIS) (73197)	2		
-182	HT6M-23	BOLT (HIS) (73197)	1		
-183	HT6M-21	BOLT (HIS) (73197)	1		
-184	HT6M-19	BOLT (HIS) (73197)	1		
-185	HT6M-17	BOLT (HIS) (73197)	1		
-186	HT6M-15	BOLT (HIS) (73197)	1		
-187	209-14137	SHIM, Inboard wing landing gear aft spar	8		
-188	HT6M-13	BOLT (HIS) (73197)	3		
-189	HT6M-20	BOLT (HIS) (73197)	1		
-190	HT6M-22	BOLT (HIS) (73197)	1		
-191	HT6M-27	BOLT (HIS) (73197)	1		
-192	HT6M-28	BOLT (HIS) (73197)	1		
-193	HT6M-30	BOLT (HIS) (73197)	3		
	209-14261-5	WASHER, Inboard wing aft landing gear spar tapered	5		
	2W18-616	WASHER, Flat (NA) (89372)	6		
	EB-064	NUT (EN) (72962)	3		
-194		MAIN LANDING GEAR TRUNNION (see figure 24 for breakdown)			
-195	HT5M-8	BOLT (HIS) (73197)	2		
	MS29513-11	PACKING	2		
-196	HT5M-9	BOLT (HIS) (73197)	2		
	MS29513-11	PACKING	2		
-197	HT5M-10	BOLT (HIS) (73197)	3		
	MS29513-11	PACKING	3		
-198	HT5M-11	BOLT (HIS) (73197)	3		
	MS29513-11	PACKING	3		
-199	HT5M-12	BOLT (HIS) (73197)	3		
	MS29513-11	PACKING	3		
-200	HT5M-13	BOLT (HIS) (73197)	3		
	MS29513-11	PACKING	3		
-201	HT7M-24	BOLT (HIS) (73197)	1		
-202	HT7M-24	BOLT (HIS) (73197)	2		
	MS29513-14	PACKING	2		
-203	HT7M-14	BOLT (HIS) (73197)	2		
-204	HT7M-14	BOLT (HIS) (73197)	2		
-205	HT7M-15	BOLT (HIS) (73197)	6		
	MS29513-14	PACKING	6		
-206	HT7M-18	BOLT (HIS) (73197)	2		
-207	209-14212	SHIM, Forward landing gear spar nut plate	1		
-208	HT7M-14	BOLT (HIS) (73197)	3		
-209	HT7M-15	BOLT (HIS) (73197)	1		
	MS29513-14	PACKING	1		
-210	HT5M-12	BOLT (HIS) (73197)	16		
	2W18-516	WASHER, Flat (NA) (89372)	16		
	K1910-524	NUT (KNM) (75237)	14		
	EB-054	NUT (EN) (72962)	2		
-211		MAIN LANDING GEAR STRUT DOOR ASSEMBLY (see figure 12 for breakdown)			
-212	HT6M-12	BOLT (HIS) (73197)	1		
	2W18-616	WASHER, Flat (NA) (89372)	1		
	52-1571B-064	NUT (EN) (72962)	1		
-213	HT4M-11	BOLT (HIS) (73197)	11		
	2W18-416	WASHER, Flat (NA) (89372)	11		

SKIN ATTACHING PARTS (LOWER)

FIGURE & INDEX NO.	PART NUMBER	1 2 3 4 5 6 7 NOMENCLATURE	UNITS PER ASSY.	USABLE ON CODE	S/C NO.
15	K1910-428	NUT (KNM) (75237)	11		
-214	HT6M-15	BOLT (HIS) (73197)	2		
	2W18-816	WASHER, Flat (NA) (89372)	2		
	EB-080	NUT (EN) (72962)	2		
-215	AN509-10R10	SCREW	12		
-216	HT4M-10	BOLT (HIS) (73197)	15		
	2W18-416	WASHER, Flat (NA) (89372)	15		
	K1910-428	NUT (KNM) (75237)	15		
-217	HT5M-10	BOLT (HIS) (73197)	7		
	2W18-516	WASHER, Flat (NA) (89372)	7		
	K1910-524	NUT (KNM) (75237)	7		
-218	HT5M-9	BOLT (HIS) (73197)	8		
	2W18-516	WASHER, Flat (NA) (89372)	8		
	K1910-524	NUT (KNM) (75237)	8		
-219	HT5M-8	BOLT (HIS) (73197)	1		
	2W18-516	WASHER, Flat (NA) (89372)	1		
	K1910-524	NUT (KNM) (75237)	1		
-220	HT6M-16	BOLT (HIS) (73197)	1		
	2W18-616	WASHER, Flat (NA) (89372)	1		
	EB-064	NUT (EN) (72962)	1		
-221	HT5M-9	BOLT (HIS) (73197)	3		
	MS29513-11	PACKING	3		
-222	HT6M-15	BOLT (HIS) (73197)	3		
	2W18-616	WASHER, Flat (NA) (89372)	3		
	EB-064	NUT (EN) (72962)	3		
-223	HT5M-7	BOLT (HIS) (73197)	4		
	2W18-516	WASHER, Flat (NA) (89372)	4		
	K1910-524	NUT (KNM) (75237)	4		
-224	HT4M-8	BOLT (HIS) (73197)	2		
	MS29513-10	PACKING	2		
-225	HT6M-7	BOLT (HIS) (73197)	1		
	2W18-616	WASHER, Flat (NA) (89372)	1		
	52-1571B-064	NUT (EN) (72962)	1		
-226	HT5M-7	BOLT (HIS) (73197)	58		
	2W18-516	WASHER, Flat (NA) (89372)	58		
	K1910-524	NUT (KNM) (75237)	58		
-227	HT4M-6	BOLT (HIS) (73197)	4		
	MS29513-10	PACKING	4		
-228	HT4M-9	BOLT (HIS) (73197)	10		
	MS29513-10	PACKING	10		
-229	HT5M-12	BOLT (HIS) (73197)	5		
	MS29513-11	PACKING	5		
-230	HT4M-18	BOLT (HIS) (73197)	1		
	MS29513-10	PACKING	1		
-231	HT4M-12	BOLT (HIS) (73197)	4		
	MS29513-10	PACKING	4		
-232	HT4M-10	BOLT (HIS) (73197)	10		
	MS29513-10	PACKING	10		
-233	HT4M-12	BOLT (HIS) (73197)	20		
	MS29513-10	PACKING	20		
-234	HT4M-11	BOLT (HIS) (73197)	13		
	MS29513-10	PACKING	13		
-235	HT4M-7	BOLT (HIS) (73197)	17		
	MS29513-10	PACKING	17		
-236	HT4M-11	BOLT (HIS) (73197)	12		
	MS29513-10	PACKING	12		
-237	HT5M-11	BOLT (HIS) (73197)	11		
	MS29513-11	PACKING	11		
-238	HT4M-6	BOLT (HIS) (73197)	4		
	MS29513-10	PACKING	4		
-239	HT4M-7	BOLT (HIS) (73197)	25		
	2W18-416	WASHER, Flat (NA) (89372)	25		
	K1910-428	NUT (KNM) (75237)	25		
-240	HT6M-12	BOLT (HIS) (73197)	1		
	2W18-616	WASHER, Flat (NA) (89372)	1		
	52-1571B-064	NUT (EN) (72962)	1		
-241	MS20004-30	BOLT	3		
	2W10-4	WASHER, Countersunk (NA) (89372)	3		
	2W18-416	WASHER, Flat (NA) (89372)	3		
	EB-048	NUT (EN) (72962)	3		
-242	MS20004-29	BOLT	1		
	2W10-4	WASHER, Countersunk (NA) (89372)	1		
	2W18-416	WASHER, Flat (NA) (89372)	1		
	EB-048	NUT (EN) (72962)	1		
-243	MS20007-37	BOLT	1		
	2W10-7	WASHER, Countersunk (NA) (89372)	1		
-244	MS20005-37	BOLT	2		
	2W10-5	WASHER, Countersunk (NA) (89372) (LH only)	3		
	2W10-5	WASHER, Countersunk (NA) (89372) (RH only)	2		
-245	MS20004-30	BOLT	3		
	2W10-4	WASHER, Countersunk (NA) (89372)	3		
-246	MS20004-29	BOLT	2		
	2W10-4	WASHER, Countersunk (NA) (89372)	4		

FRAME ASSEMBLY AND EXTERNAL STORES FITTINGS

FIGURE & INDEX NO.	PART NUMBER	1 2 3 4 5 6 7 NOMENCLATURE	UNITS PER ASSY.	USABLE ON CODE	S/C NO.
16	NAS463T-DD416	SHIM	4		
-84	2610-048	NUT, Anchor (NUS) (80539)	4		
		---*---			
-85	209-14196-5	. FITTING, Inboard wing hydraulic tunnel assembly LH (use on 209-14196-1 only) (make from 209-14194-1)	1		
	209-14196-13	. FITTING, Inboard wing hydraulic tunnel assembly LH (use on 209-14196-11 only)	1	QA	
	209-14196-6	. FITTING, Inboard wing hydraulic tunnel assembly RH (use on 209-14196-2 only) (make from 209-14194-2)	1		
	209-14196-14	. FITTING, Inboard wing hydraulic tunnel assembly RH (use on 209-14196-12 only)	1	QA	
-86	209-14196-7	. TUBE, Inboard wing hydraulic tunnel assembly (use on 209-14196-1 and -2)	1		
	209-14196-9	. TUBE, Inboard wing hydraulic tunnel assembly (use on 209-14196-11 and -12)	1	QA	
-87	209-14195-3	FITTING, Inboard wing aft intermediate spar hydraulic tunnel LH (make from 209-14195-1)	1		
	209-14195-4	FITTING, Inboard wing aft intermediate spar hydraulic tunnel RH (make from 209-14195-2)	1		
-88	209-14706-3	FITTING, External stores BL 105 forward intermediate spar LH	1		
	209-14706-4	FITTING, External stores BL 105 forward intermediate spar RH	1		
-89	AN365-524	NUT	3		
-90	2W18-516	WASHER, Flat (NA) (89372)	6		
-91	NAS145-24	BOLT	3		
-92	AN365-524	NUT	6		
-93	2W18-516M	WASHER, Flat (NA) (89372)	12		
-94	NAS145-18	BOLT	6		
-95	1191-9CNx-27/32	INSERT, Heli-coil (AF) (91767)	2	ET	
	209-14282	INSERT ASSEMBLY, Inboard wing intermediate pylon attaching	2	FR	
	1191-9CNx-27/32	. INSERT, Heli-coil (AF) (91767)	2	FR	
	2P9-5-8	PIN, Press fit (NA) (89372)	2	FR	
	209-14284-5	BUSHING, Inboard wing pylon attaching	2	FR	
-96	HT8M-33	BOLT (HIS) (73197)	2		
	MS29513-18	PACKING	2		
	209-14170-9	SHIM, Inboard wing double lug anchor nut	2		
-97	HT6M-33	BOLT (HIS) (73197)	1		
	MS29513-12	PACKING	1		
-98	209-14343	PAD, External stores wing station 105 intermediate	1		
-99	209-14712-3	FITTING, External stores BL 105 intermediate aft spar	1		
-100	AN365-524	NUT	4		
-101	2W18-516M	WASHER, Flat (NA) (89372)	8		
-102	NAS145-20	BOLT	4		
-103	AN365-524	NUT	4		
-104	2W18-516M	WASHER, Flat (NA) (89372)	8		
-105	NAS145-16	BOLT	4		
-106	HT7M-32	BOLT (HIS) (73197)	2		
	MS29513-14	PACKING	2		
-107	1191-9CNx-27/32	INSERT, Heli-coil (AF) (91767)	1		
-108	209-14344	PAD, External stores wing station 105 aft	1		
-109	209-14070-3	RIB, Inboard wing aft rear spar station 91.4 LH	1		
	209-14070-4	RIB, Inboard wing aft rear spar station 91.4 RH	1		
-110	209-14175-3	RIB, Inboard wing intermediate rear spar station 91.4 LH	1		
	209-14175-4	RIB, Inboard wing intermediate rear spar station 91.4 RH	1		
	ATTACHING PARTS				
	MS20005-12	BOLT (use on aft end of 209-14175-3 and -4)	4		
	2W10-5	WASHER, Countersunk (NA) (89372)	8		
	2W18-516	WASHER, Flat (NA) (89372)	8		
	EB-054	NUT (EN) (72962)	8		
	MS20005-13	BOLT (use on forward end of 209-14175-3 and -4)	4		
		---*---			
-111	209-14068-11	RIB ASSEMBLY, Inboard wing forward rear spar station 91.4 LH	1	ET	
	209-14068-21	RIB ASSEMBLY, Inboard wing forward rear spar station 91.4 LH	1	FR	
	209-14068-12	RIB ASSEMBLY, Inboard wing forward rear spar station 91.4 RH	1	ET	
	209-14068-22	RIB ASSEMBLY, Inboard wing forward rear spar station 91.4 RH	1	FR	
	ATTACHING PARTS				
	209-14177	SHIM, Inboard wing corner double lug anchor nut	2		
	MS20002-7	BOLT	2		
	AN177-10A	BOLT	2		
	600-015-7/16	STAT-O-SEAL (WFRC) (83259)	2		
	52NA5-070	NUT, Anchor (EN) (72962)	2		
		---*---			
-112	209-14705-3	FITTING, External stores skin backup BL 105 forward LH	1		
	209-14705-4	FITTING, External stores skin backup BL 105 forward RH	1		
-113	MS20005-8	BOLT	1	ET	
	2W10-5	WASHER, Countersunk (NA) (89372)	1	ET	
	600-015-5/16	STAT-O-SEAL (WFRC) (83259)	1	ET	
	2620-054	NUT, Anchor (NUS) (80539)	1	ET	
	MS20005-8	BOLT	1	FR	
	2W10-5	WASHER, Countersunk (NA) (89372)	1	FR	
	600-015-5/16	STAT-O-SEAL (WFRC) (83259)	1	FR	
	2620-054	NUT, Anchor (NUS) (80539)	1	FR	
-114	MS20005-8	BOLT	1	ET	
	4B19S5-004	BUSHING, Press fit plain (NA) (89372)	1	ET	
	2W10-5	WASHER, Countersunk (NA) (89372)	1	ET	
	600-015-5/16	STAT-O-SEAL (WFRC) (83259)	1	ET	

FRAME ASSEMBLY AND EXTERNAL STORES FITTINGS

FIGURE & INDEX NO.	PART NUMBER	1 2 3 4 5 6 7 NOMENCLATURE	UNITS PER ASSY.	USABLE ON CODE	S/C NO.
16	1191-5C-5/8	INSERT, Heli-coil (AF) (91767)	1	ET	
	MS20006-8	BOLT	2	FR	
	4B19S6-004	BUSHING, Press fit plain (NA) (89372)	2	FR	
	2W10-6	WASHER, Countersunk (NA) (89372)	2	FR	
	600-015-3/8	STAT-O-SEAL (WFRC) (83259)	2	FR	
	1191-6CNx-9/16	INSERT, Heli-coil (AF) (91767)	2	FR	
-115	FB-048	NUT (EN) (72962)	2		
-116	2W18-416M	WASHER, Flat (NA) (89372)	2		
-117	MS20004-8	BOLT	2		
-118	2W10-4	WASHER, Countersunk (NA) (89372)	2		
-119	HT8M-39	BOLT (HIS) (73197)	2		
	MS29513-16	PACKING	2		
	209-14170-9	SHIM, Inboard wing double lug anchor nut	2		
	NA-101-080	NUT, Anchor (EN) (72962)	1		
	52NA5-080	NUT, Anchor (EN) (72962)	1		
-120	1191-10CNx-15/16	INSERT, Heli-coil (AF) (91767)	1	ET	
	209-14283	INSERT ASSEMBLY, Inboard wing forward pylon attaching	1	FR	
	1191-10CNx-15/16	. INSERT, Heli-coil (AF) (91767)	1	FR	
	2P9-5-8	PIN, Press fit (NA) (89372)	2	FR	
	209-14284-3	BUSHING, Inboard wing pylon attaching	1	FR	
-121	209-14342-1	PAD, External stores wing station 105 forward LH	1	FS	
	209-14342-2	PAD, External stores wing station 105 forward RH	1	FS	
-122	209-14345-1	PAD ASSEMBLY, External stores fuel rear spar station 91.4 forward LH	1	FS	
	209-14345-2	PAD ASSEMBLY, External stores fuel rear spar station 91.4 forward RH	1	FS	
	79-028-125-0500	. ROLLPIN (EN) (72962)	2	FS	
-123	209-14341	FITTING ASSEMBLY, Flapper valve attaching	3	ES	
	ATTACHING PARTS				
-124	AN3-25A	BOLT	6	ES	
-125	2W18-10M	WASHER, Flat (NA) (89372)	6	ES	
-126	AN364-1032	NUT	6	ES	
	---*---				
-127	RS103SB-5	. INSERT (ROSN) (83324)	2	ES	
-128	209-14704-3	FITTING, External stores skin backup side brace	1		
-129	AN365-428	NUT	6		
-130	NAS144-15	BOLT	6		
-131	2W18-416M	WASHER, Flat (NA) (89372)	12		
-132	AN365-428	NUT	2		
-133	2W18-416	WASHER, Flat (NA) (89372)	2		
-134	NAS334CPA11	BOLT	2		
-135	HT5M-32	BOLT (HIS) (73197)	2		
	MS29513-11	PACKING	2		
-136	1191-8CNx-3/4	INSERT, Heli-coil (AF) (91767)	1		
-137	209-14053-11	RIB ASSEMBLY, Inboard wing rear spar station 59.957 LH	1		
	209-14053-12	RIB ASSEMBLY, Inboard wing rear spar station 59.957 RH	1		
-138	209-14110-23	CHANNEL, Inboard wing 63.625% plane spar assembly	1		
-139	209-14110-25	CHANNEL, Inboard wing 63.625% plane spar assembly	1		
-140	209-141130-11	SPAR ASSEMBLY, Inboard wing landing gear aft canted LH	1	AW	
	209-141130-21	SPAR ASSEMBLY, Inboard wing landing gear aft canted LH	1	BY	
	209-141130-12	SPAR ASSEMBLY, Inboard wing landing gear aft canted RH	1	AW	
	209-141130-22	SPAR ASSEMBLY, Inboard wing landing gear aft canted RH	1	BY	
	209-141130-3	. SPAR, Inboard wing landing gear aft canted LH spar assembly	1	AW	
	209-141130-5	. SPAR, Inboard wing landing gear aft canted LH spar assembly	1	BY	
	209-141130-4	. SPAR, Inboard wing landing gear aft canted RH spar assembly	1	AW	
	209-141130-6	. SPAR, Inboard wing landing gear aft canted RH spar assembly	1	BY	
	860-015-7/8	RIV-O-SEAL (WFRC) (83259)	8		
-141	209-14315-11	SPAR ASSEMBLY, Inboard wing rear landing gear fold strut attaching LH	1	ET	
	209-14315-21	SPAR ASSEMBLY, Inboard wing landing gear fold strut attaching LH	1	FR	
	209-14315-12	SPAR ASSEMBLY, Inboard wing landing gear fold strut attaching RH	1	ET	
	209-14315-22	SPAR ASSEMBLY, Inboard wing landing gear fold strut attaching RH	1	FR	
	4B20S10-011	. BUSHING, Press fit flanged (NA) (89372)	2		
	600-015-5/16	. SEAL (WFRC) (83259)	1		
	600-015-1/4-OS	. SEAL (WFRC) (83259)	4		
-142	209-14052-21	RIB ASSEMBLY, Inboard wing rear spar station 56.925 LH	1		
	209-14052-22	RIB ASSEMBLY, Inboard wing rear spar station 56.925 RH	1		
	ATTACHING PARTS				
	AN177-12A	BOLT	4		
	MS20002-7	BOLT	4		
	600-015-7/16	STAT-O-SEAL (WFRC) (83259)	4		
	NA2648-070	NUT, Anchor (EN) (72962)	2		
	NA2647-070	NUT, Anchor (EN) (72962)	2		
	---*---				
-143	209-14303-11	FITTING ASSEMBLY, Inboard wing fuselage attaching forward LH	1	A	
	209-14218-11	FITTING ASSEMBLY, Wing to fuselage forward LH	1	B	
	209-14303-12	FITTING ASSEMBLY, Inboard wing fuselage attaching forward RH	1	A	
	209-14218-12	FITTING ASSEMBLY, Wing to fuselage forward RH	1	B	
	ATTACHING PARTS				
-144	MS20006-8	BOLT	4	A	
-145	2W10-6	WASHER, Countersunk (NA) (89372)	4	A	
	NA2647-064	NUT, Anchor (EN) (72962)	2		
	NA2648-064	NUT, Anchor (EN) (72962)	2		
-146	HT7M-16	BOLT (HIS) (73197)	2		
-147	2W18-716	WASHER, Flat (NA) (89372)	2		
-148	EB-070	NUT (EN) (72962)	2		
-149	HT8M-16	BOLT (HIS) (73197)	2		
-150	2W18-816	WASHER, Flat (NA) (89372)	2		

REAR SPAR ASSEMBLY

FIGURE & INDEX NO.	PART NUMBER	1 2 3 4 5 6 7 NOMENCLATURE	UNITS PER ASSY.	USABLE ON CODE	S/C NO.
17	209-14006-101	TRAILING EDGE ASSEMBLY, Inboard wing LH	1	ET	
	209-14006-201	TRAILING EDGE ASSEMBLY, Inboard wing LH	1	FR	
	209-14006-102	TRAILING EDGE ASSEMBLY, Inboard wing RH	1	ET	
	209-14006-202	TRAILING EDGE ASSEMBLY, Inboard wing RH	1	FR	
-1	209-14102-51	. SPAR ASSEMBLY, Inboard wing aft LH	1	ET	
	209-14102-101	. SPAR ASSEMBLY, Inboard wing aft LH	1	FR	
	209-14102-52	. SPAR ASSEMBLY, Inboard wing aft RH	1	ET	
	209-14102-102	. SPAR ASSEMBLY, Inboard wing aft RH	1	FR	
-2	NAS334CPA11	. BOLT	2		
	2W18-416	. WASHER, Flat (NA) (89372)	2		
	AN365-428	. NUT	2		
-3	209-14487-1	. HINGE, Inboard wing trailing edge aileron station 138.344 to station 180.277-upper LH	1		
	209-14487-2	. HINGE, Inboard wing trailing edge aileron station 138.344 to station 180.277-upper RH	1		
	ATTACHING PARTS				
	AN509-10R14	. SCREW	6		
	2W18-10M	. WASHER, Flat (NA) (89372)	6		
	AN365-1032	. NUT	6		
	---*---				
-4	NAS334CPA11	. BOLT	2		
	2W18-416	. WASHER, Flat (NA) (89372)	2		
	AN365-428	. NUT	2		
-5	209-14486-1	. JOINT, Inboard wing trailing edge aileron station 142.625 to station 177.644-lower LH	1		
	209-14486-2	. JOINT, Inboard wing trailing edge aileron station 142.625 to station 177.644-lower RH	1		
-6	209-14486-5	. JOINT, Inboard wing trailing edge aileron station 142.625 to station 177.644-lower LH	1		
	209-14486-6	. JOINT, Inboard wing trailing edge aileron station 142.625 to station 177.644-lower RH	1		
-7	209-14426-13	. HINGE SUPPORT, Inboard wing trailing edge aileron station 170.219 LH	1		
	209-14426-14	. HINGE SUPPORT, Inboard wing trailing edge aileron station 170.219 RH	1		
-8	AN749-3-3	. JUMPER	1		
-9	AN749-3-6	. JUMPER	1		
	ATTACHING PARTS				
	AN520-10R12	. SCREW	1		
	2W1AL16-14-32	. WASHER, Plain (NA) (89372)	1		
	AN365-1032	. NUT	1		
	---*---				
-10	MS20006-6	. BOLT	2		
	2W18-616	. WASHER, Flat (NA) (89372)	4		
	AN365-624	. NUT	2		
	209-14425-1	. HINGE SUPPORT ASSEMBLY, Inboard wing trailing edge LH	1		
	209-14425-2	. HINGE SUPPORT ASSEMBLY, Inboard wing trailing edge RH	1		
-11	209-14430-3	. . FITTING, Aileron center hinge bracket outboard LH	1		
	209-14430-4	. . FITTING, Aileron center hinge bracket outboard RH	1		
-12	209-14429-3	. . FITTING, Aileron center hinge bracket inboard LH	1		
	209-14429-4	. . FITTING, Aileron center hinge bracket inboard RH	1		
-13	209-14495	. . BUSHING, Aileron center hinge assembly	1		
-14	AN365-1032	. NUT	1		
	2W1AL16-14-32	. WASHER, Plain (NA) (89372)	2		
	AN520-10R12	. SCREW	1		
-15	AN749-3-5	. JUMPER	1		
-16	NAS334CPA11-5	. BOLT	2		
	2W18-416	. WASHER, Flat (NA) (89372)	2		
	AN365-428	. NUT	2		
-17	209-14477-3	. HINGE, Inboard trailing edge aileron door upper LH	1		
	209-14477-4	. HINGE, Inboard trailing edge aileron door upper RH	1		
	ATTACHING PARTS				
	AN509-10R13	. SCREW	1		
	2W18-10M	. WASHER, Flat (NA) (89372)	1		
	AN365-1032	. NUT	1		
	---*---				
-18	209-14476-5	. JOINT, Inboard wing trailing edge aileron station 92.067 to station 127.656 -- lower LH	1		
	209-14476-6	. JOINT, Inboard wing trailing edge aileron station 92.067 to station 127.656 -- lower RH	1		
	ATTACHING PARTS				
	AN507-1032R8	. SCREW	2		
	2W1AL14-14-16	. WASHER, Plain (NA) (89372)	2		
	AN365-1032	. NUT	2		
	---*---				
-19	NAS334CPA10-5	. BOLT	2		
-20	AN365-416	. NUT	2		
-21	2W18-416	. WASHER, Flat (NA) (89372)	2		
-22	AN509-10R7	. SCREW	4		
-23	209-144136-3	. PLATE, Inboard wing trailing edge attaching lower LH	1		
	209-144136-4	. PLATE, Inboard wing trailing edge attaching lower RH	1		
-24	209-144135-1	. PLATE, Slot door land inboard wing trailing edge lower LH	1		
	209-144135-2	. PLATE, Slot door land inboard wing trailing edge lower RH	1		
-25	AN365-1032	. NUT	2		
-26	2W18-10M	. WASHER, Flat (NA) (89372)	4		

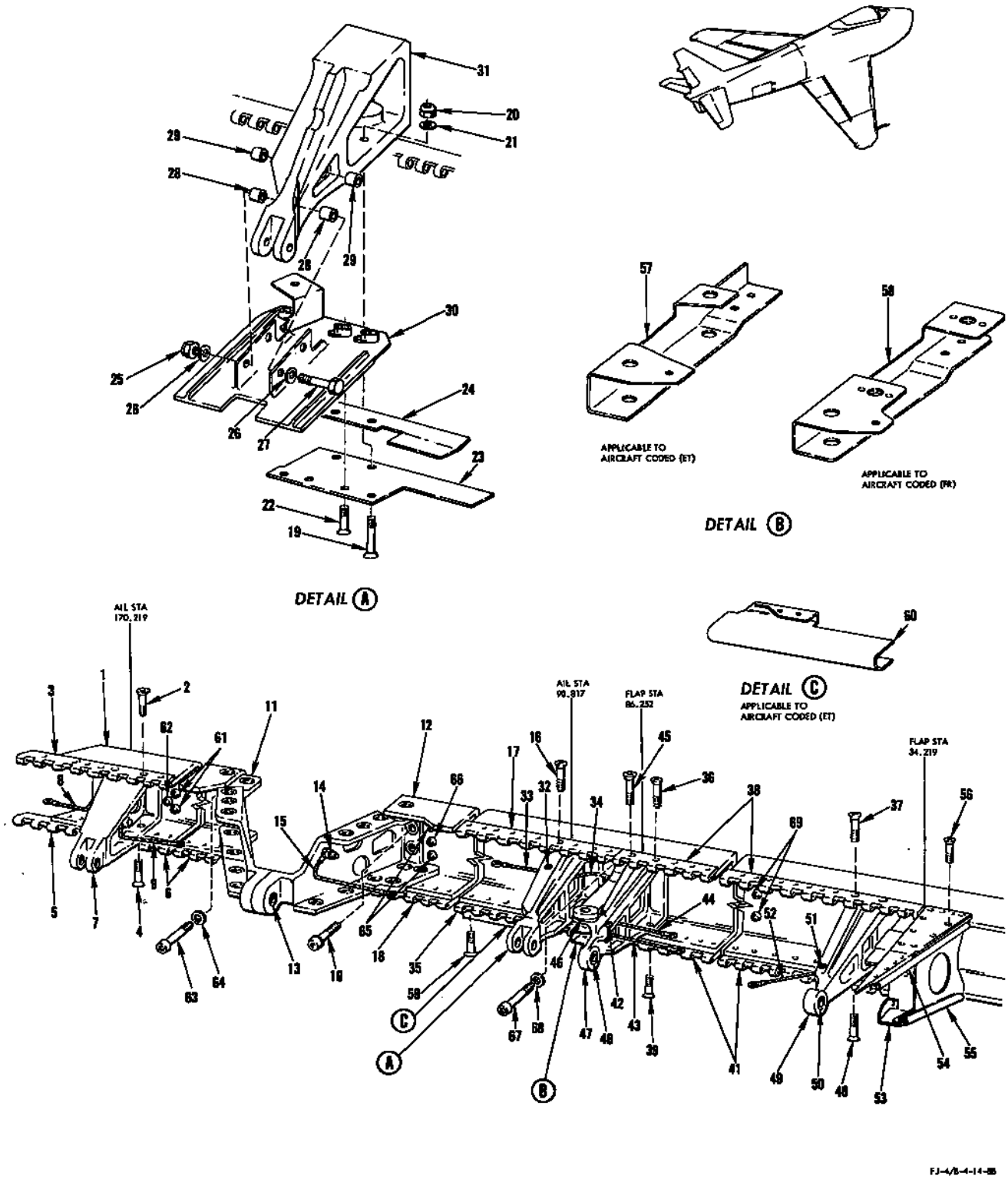

FIGURE 17 - REAR SPAR ASSEMBLY

REAR SPAR ASSEMBLY

FIGURE & INDEX NO.	PART NUMBER	1	2	3	4	5	6	7	NOMENCLATURE	UNITS PER ASSY.	USABLE ON CODE	S/C NO.
17-27	AN173-15A	.	BOLT							2		
-28	NAS43-3-21	.	SPACER							2		
-29	NAS43-3-32	.	SPACER							2		
-30	209-144128-1	.	SKIN ASSEMBLY, Inboard wing trailing edge aileron inboard hinge access LH (superseded by 209-144148-1 for future procurement)							1		
	209-144148-1	.	SKIN ASSEMBLY, Inboard wing trailing edge aileron inboard hinge access LH (supersedes 209-144128-1 for future procurement)							1	ET	
	209-144148-11	.	SKIN ASSEMBLY, Inboard wing trailing edge aileron inboard hinge access LH							1	FR	
	209-144128-2	.	SKIN ASSEMBLY, Inboard wing trailing edge aileron inboard hinge access RH (superseded by 209-144148-2 for future procurement)							1		
	209-144148-2	.	SKIN ASSEMBLY, Inboard wing trailing edge aileron inboard hinge access RH (supersedes 209-144128-2 for future procurement)							1	ET	
	209-144148-12	.	SKIN ASSEMBLY, Inboard wing trailing edge aileron inboard hinge access RH							1	FR	
-31	209-14424-3	.	HINGE SUPPORT, Inboard wing trailing edge aileron station 90.817 LH							1		
	209-14424-4	.	HINGE SUPPORT, Inboard wing trailing edge aileron station 90.817 RH							1		
-32	AN520-10R12	.	SCREW							1		
	2W1AL16-14-32	.	WASHER, Plain (NA) (89372)							2		
	AN365-1032	.	NUT							1		
-33	AN749-3-5	.	JUMPER							1		
-34	AN749-3-4	.	JUMPER							1		
-35	209-14476-3	.	JOINT, Inboard wing trailing edge aileron station 92.067 to station 127.656 -- lower							1		
-36	NAS334CPA11-5	.	BOLT							2		
	2W18-416	.	WASHER, Flat (NA) (89372)							2		
	AN365-428	.	NUT							2		
-37	NAS334CPA14-5	.	BOLT							2		
	MK1000-428	.	NUT, Anchor (KNM) (75237)							2		
-38	209-14461-3	.	JOINT, Inboard wing trailing edge flap door upper LH							1		
	209-14461-4	.	JOINT, Inboard wing trailing edge flap door upper RH							1		
-39	NAS334CPA11-5	.	BOLT							2		
	2W18-416	.	WASHER, Flat (NA) (89372)							2		
	AN365-428	.	NUT							2		
-40	NAS334CPA12	.	BOLT							2		
	2W18-416	.	WASHER, Flat (NA) (89372)							2		
	AN365-428	.	NUT							2		
-41	209-14463-3	.	JOINT, Inboard wing trailing edge flap door lower LH							1		
	209-14463-4	.	JOINT, Inboard wing trailing edge flap door lower RH							1		
-42	AN520-10R12	.	SCREW							1		
	2W1AL16-14-32	.	WASHER, Plain (NA) (89372)							2		
	AN365-1032	.	NUT							1		
-43	MS25083-1BC5	.	JUMPER ASSEMBLY							1		
-44	MS25083-1BC4	.	JUMPER ASSEMBLY							1		
-45	7S29-10A12	.	SCREW, Shear 100° flush hi-shear head close tolerance (NA)							1	FR	
	2W18-10M	.	WASHER, Flat (NA) (89372)							2	FR	
	AN364-1032	.	NUT							1	FR	
-46	209-523154-1	.	SUPPORT, Aileron inboard wing rig pin LH							1	FR	
	209-523154-2	.	SUPPORT, Aileron inboard wing rig pin RH							1	FR	
-47	209-14423-11	.	HINGE SUPPORT ASSEMBLY, Inboard wing trailing edge flap station 86.252 LH							1		
	209-14423-12	.	HINGE SUPPORT ASSEMBLY, Inboard wing trailing edge flap station 86.252 RH							1		
	NAS516-1	.	. FITTING, Lubricator							1		
-48	B-68-POH	.	. BEARING (TOR) (60380)							1		
-49	209-14422-11	.	HINGE SUPPORT ASSEMBLY, Inboard wing trailing edge flap station 37.825 LH							1	ET	
	209-14432-11	.	SUPPORT ASSEMBLY, Inboard wing trailing edge flap station 37.825 LH							1	FR	
	209-14422-12	.	HINGE SUPPORT ASSEMBLY, Inboard wing trailing edge flap station 37.825 RH							1	ET	
	209-14432-12	.	SUPPORT ASSEMBLY, Inboard wing trailing edge flap station 37.825 RH							1	FR	
	NAS516-1	.	. FITTING, Lubricator							1		
-50	B-68-POH	.	. BEARING (TOR) (60380)							1		
-51	AN520-10R12	.	SCREW							1		
	2W1AL16-14-32	.	WASHER, Plain (NA) (89372)							2		
	AN365-1032	.	NUT							1		
-52	MS25083-1BC5	.	JUMPER ASSEMBLY							1		
-53	209-144120-1	.	FAIRING ASSEMBLY, Inboard wing trailing edge to fuselage LH							1	ET	
	209-144120-201	.	FAIRING ASSEMBLY, Inboard wing trailing edge to fuselage LH							1	FR	
	209-144120-2	.	FAIRING ASSEMBLY, Inboard wing trailing edge to fuselage RH							1	ET	
	209-144120-202	.	FAIRING ASSEMBLY, Inboard wing trailing edge to fuselage RH							1	FR	
-54	209-144120-15	.	. SEAL, Inboard wing trailing edge to fuselage fairing assembly							1		
-55	209-144120-17	.	. SEAL, Inboard wing trailing edge to fuselage fairing assembly LH							1		
	209-144120-18	.	. SEAL, Inboard wing trailing edge to fuselage fairing assembly RH							1		
-56	AN509-10R8	.	. SCREW							6		
-57	209-14471-1	.	LAND, Inboard wing trailing edge slot doors LH							1	ET	
	209-14471-2	.	LAND, Inboard wing trailing edge slot doors RH							1	ET	
-58	209-540131-1	.	BRACKET, Conduit trailing edge electrical assembly of LH							1	FR	
	209-540131-2	.	BRACKET, Conduit trailing edge electrical assembly of RH							1	FR	
	2600-02	.	. NUT, Anchor (NUS) (80539)							2	FR	
-59	AN507-4R8	.	SCREW							1	ET	
	2W18-4L	.	WASHER, Flat (NA) (89372)							1	ET	
	AN365-440	.	NUT							1	ET	
-60	209-54082-1	.	CONDUIT ASSEMBLY, Wing trailing edge electrical LH							1	ET	
	209-54082-2	.	CONDUIT ASSEMBLY, Wing trailing edge electrical RH							1	ET	

REAR SPAR ASSEMBLY

FIGURE & INDEX NO.	PART NUMBER	1 2 3 4 5 6 7 NOMENCLATURE	UNITS PER ASSY.	USABLE ON CODE	S/C NO.
17-61	MS20006-10	BOLT	2		
	2W10-6	WASHER, Countersunk (NA) (89372)	2		
	NA2647-064	NUT, Anchor (EN) (72962)	2		
-62	MS20005-7	BOLT	1		
	2W10-5	WASHER, Countersunk (NA) (89372)	1		
	600-015x5/16	STAT-O-SEAL (WFRC) (83259)	1		
	NA2648-054	NUT, Anchor (EN) (72962)	1		
-63	MS20006-9	BOLT	2		
-64	2W10-6	WASHER, Countersunk (NA) (89372)	2		
	NA2647-064	NUT, Anchor (EN) (72962)	2		
-65	MS20005-7	BOLT	2		
	2W10-5	WASHER, Countersunk (NA) (89372)	2		
	NA2647-054	NUT, Anchor (EN) (72962)	2		
-66	MS20004-7	BOLT	1		
	2W10-4	WASHER, Countersunk (NA) (89372)	1		
	NA2647-048	NUT, Anchor (EN) (72962)	1		
-67	MS20006-8	BOLT	3		
-68	2W10-6	WASHER, Countersunk (NA) (89372)	3		
	600-015x3/8	STAT-O-SEAL (WFRC) (83259)	3		
	2620-064	NUT, Anchor (NUS) (80539)	3		
-69	MS20008-16	BOLT	2		
	2W10-8	WASHER, Countersunk (NA) (89372)	2		
	600-015x1/2	STAT-O-SEAL (WFRC) (83259)	2		
	209-14170-9	SHIM, Inboard wing double lug anchor nut	2		
	NA101-080	NUT, Anchor (EN) (72962)	2		

DROOP AND LEADING EDGE ASSEMBLIES

FIGURE & INDEX NO.	PART NUMBER	1 2 3 4 5 6 7 NOMENCLATURE	UNITS PER ASSY.	USABLE ON CODE	S/C NO.
18-1	HT4M-4	SCREW (HIS) (73197)	2		
	2W18-416	WASHER, Flat (NA) (39372)	1		
	EB-048	NUT (EN) (72962)	1		
-2	HT4M-9	SCREW (HIS) (73197)	5		
	22NA5-048	NUT (EN) (72962)	5		
-3	209-17037	FITTING ASSEMBLY, Leading edge stop inner panel outer	5		
	1191-3CNx-.475	. INSERT, Heli-coil (AF) (91767)	5		
	NAS428-3-7	BOLT	5		
	209-17058	NUT, Check droop nose leading edge stop inner panel outer	5		
-4	HT4M-9	SCREW (HIS) (73197)	5		
-5	HS52P-8-8	PIN (HIS) (73197)	5		
	HS15-8	COLLAR (HIS) (73197)	5		
-6	HT4M-7	SCREW (HIS) (73197)	17		
-7	209-17030	FITTING, Leading edge actuator support aft 0% station 194.125	1		
-8	HT4M-10	SCREW (HIS) (73197)	2		
	2W18-416	WASHER, Flat (NA) (89372)	2		
	EB-048	NUT (EN) (72962)	2		
-9	HT4M-8	SCREW (HIS) (73197)	4		
	2W18-416	WASHER, Flat (NA) (89372)	4		
	EB-048	NUT (EN) (72962)	4		
-10	HT4M-7	SCREW (HIS) (73197)	1		
	NA2648-048	NUT (EN) (72962)	1		
-11	HT4M-10	SCREW (HIS) (73197)	2		
	2W18-416	WASHER, Flat (NA) (89372)	1		
	2W18-416M	WASHER, Flat (NA) (89372) (use between nut and clip)	1		
	EB-048	NUT (EN) (72962)	2		
-12	HT4M-10	SCREW (HIS) (73197)	1		
	2W18-416	WASHER, Flat (NA) (89372)	1		
	EB-048	NUT (EN) (72962)	1		
-13	209-54262-1	FITTING, Leading edge stop 0% station 179.010 LH assembly of	1		
	209-54262-2	FITTING, Leading edge stop 0% station 179.010 RH assembly of	1		
-14	209-17043	FITTING, Leading edge actuator support aft 0% station 164.875	1		
-15	209-17032-1	RUBBER STRIP ASSEMBLY, Droop nose leading edge inner panel outer LH	1		
	209-17032-2	RUBBER STRIP ASSEMBLY, Droop nose leading edge inner panel outer RH	1		
-16	209-17036-11	FITTING ASSEMBLY, Leading edge stop 0% station 146.875 LH	1		
	209-17036-12	FITTING ASSEMBLY, Leading edge stop 0% station 146.875 RH	1		
	1191-4CNx-1/2	. INSERT, Heli-coil (AF) (91767)	2		
-17	HT4M-10	SCREW (HIS) (73197)	2		
-18	2W18-416	WASHER, Flat (NA) (89372)	2		
-19	EB-048	NUT (EN) (72962)	2		
-20	NAS428-4-10	BOLT	1		
-21	1N7-4A	NUT, Check (NA) (89372)	1		
-22	209-17005-1	DROOP NOSE ASSEMBLY, Leading edge inner panel outer LH	1	ET	
	209-17005-2	DROOP NOSE ASSEMBLY, Leading edge inner panel outer RH	1	ET	
	209-17005-21	DROOP NOSE ASSEMBLY, Leading edge inner panel outer LH	1	FR	
	209-17005-22	DROOP NOSE ASSEMBLY, Leading edge inner panel outer RH	1	FR	
-23	209-17011-3	. HINGE, Droop nose leading edge inner panel outer LH	1		
	209-17011-4	. HINGE, Droop nose leading edge inner panel outer RH	1		
-24	209-17029	. FITTING ASSEMBLY, Leading edge actuat or support forward inner panel outer	2		
	ATTACHING PARTS				
-25	209-917038-9	. SCREW, Droop nose leading edge (NA Dwg Design Spec)	2		
	---*---				
-26	4B19B4-004	. . BUSHING, Press fit plain (NA) (89372)	2		
-27	209-17027-1	. FENCE, Inboard wing station 151.207 forward LH	1	ET	
	209-17027-2	. FENCE, Inboard wing station 151.207 forward RH	1	ET	
	209-17027-3	. FENCE, Inboard wing station 151.207 forward LH	1	FR	
	209-17027-4	. FENCE, Inboard wing station 151.207 forward RH	1	FR	
	ATTACHING PARTS				
	AN509-10R11	. SCREW	4		
	---*---				
-28	NAS221-9	. SCREW	1		
	2W18-10M	. WASHER, Flat (NA) (89372)	1		
-29	209-17063-1	. BRACKET, Leading edge wing 0% station 179.010 LH	1		
	209-17063-2	. BRACKET, Leading edge wing 0% station 179.010 RH	1		
	ATTACHING PARTS				
-30	AN509-10R10	. SCREW	4		
	3600-02	. NUT, Anchor (NUS) (80539)	4		
-31	NAS221-11	. SCREW	4		
-32	2W18-10	. WASHER, Flat (NA) (89372)	4		
	3600-02	. NUT, Anchor (NUS) (80539)	4		
-33	AN365-1032	. NUT	6		
-34	2W18-10	. WASHER, Flat (NA) (89372)	6		
-35	AN509-10R14	. SCREW	6		
	---*---				
-36	209-17045-21	PIN ASSEMBLY, Droop nose leading edge	1		
-37	HT4M-10	SCREW (HIS) (73197)	15		
	2W18-416	WASHER, Flat (NA) (89372)	15		
	K1910-428	NUT (KNM) (75237)	15		
-38	209-17011-11	HINGE, Droop nose leading edge inner panel outer LH	1		
	209-17011-12	HINGE, Droop nose leading edge inner panel outer RH	1		
-39	HT4M-10	SCREW (HIS) (73197)	27		
	2W18-416	WASHER, Flat (NA) (89372)	27		

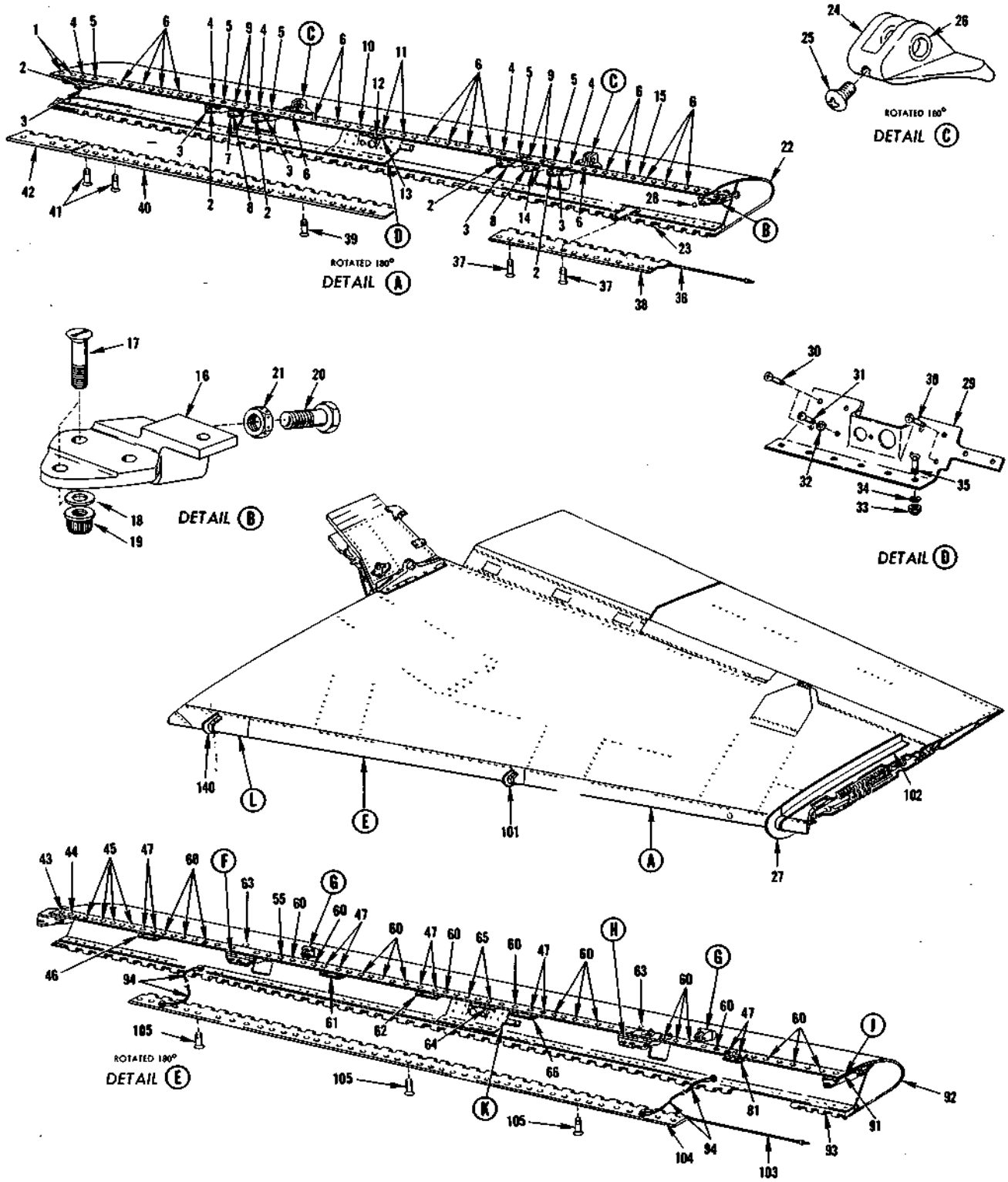

FIGURE 18 - DROOP AND LEADING EDGE ASSEMBLIES (SHEET 1)

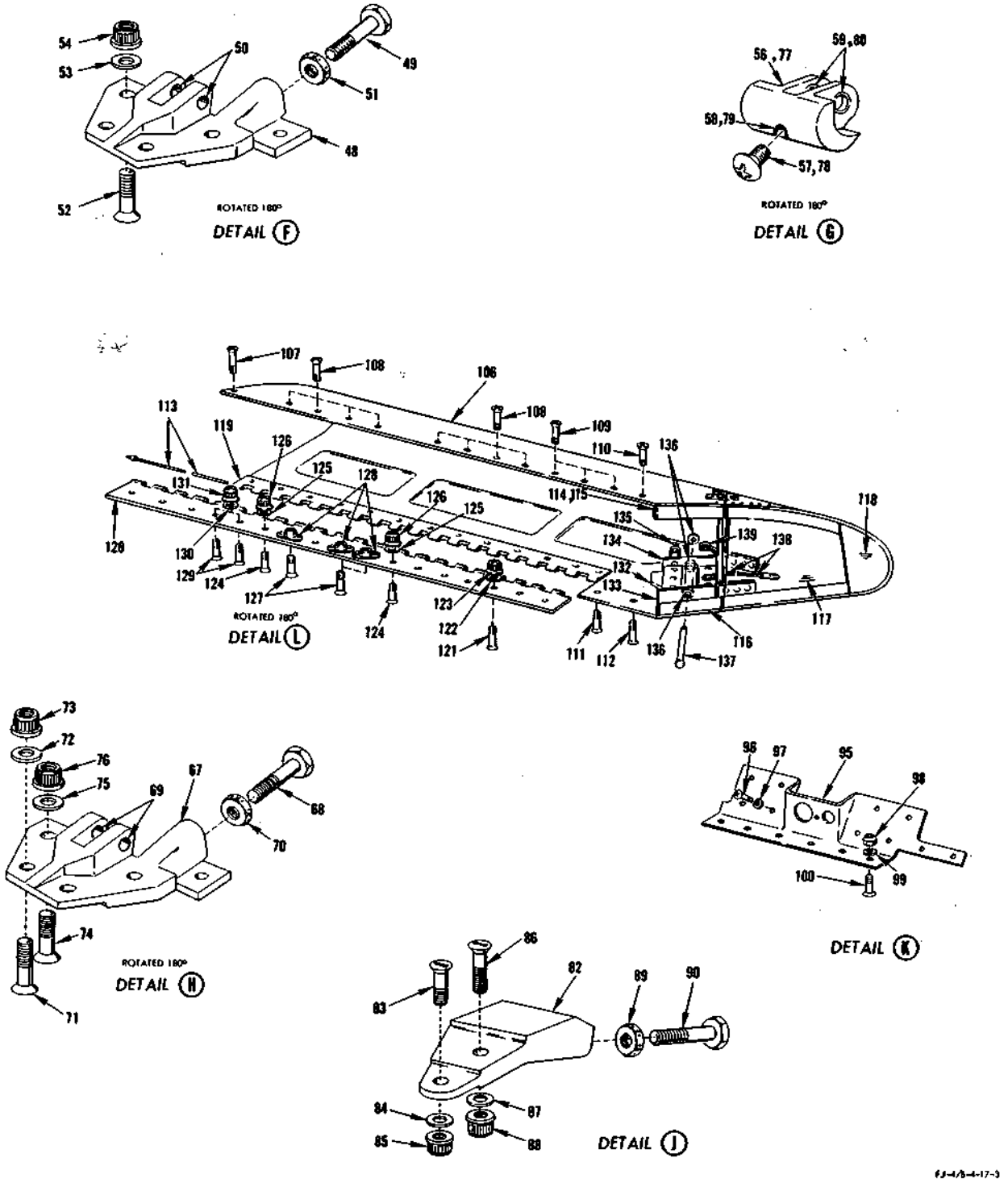

FIGURE 18 - DROOP AND LEADING EDGE ASSEMBLIES (SHEET 2)

DROOP AND LEADING EDGE ASSEMBLIES

FIGURE & INDEX NO.	PART NUMBER	1 2 3 4 5 6 7 NOMENCLATURE	UNITS PER ASSY.	USABLE ON CODE	S/C NO.
18	K1910-428	NUT (KNM) (75237)	27		
-40	209-17011-9	HINGE, Droop nose leading edge inner panel outer LH	1		
	209-17011-10	HINGE, Droop nose leading edge inner panel outer RH	1		
-41	HT4M-13	SCREW (HIS) (73197)	2		
	2W18-416	WASHER, Flat (NA) (89372)	2		
	EB-048	NUT (EN) (72962)	2		
-42	209-17011-7	HINGE, Droop nose leading edge inner panel outer LH	1		
	209-17011-8	HINGE, Droop nose leading edge inner panel outer RH	1		
-43	HT4M-11	SCREW (HIS) (73197)	1		
	2W18-416	WASHER, Flat (NA) (89372)	1		
	EB-048	NUT (EN) (72962)	1		
-44	HT4M-7	SCREW (HIS) (73197)	1		
-45	HT5M-8	SCREW (HIS) (73197)	4		
-46	209-17047-3	SUPPORT, Leading edge droop nose rubbing strip	1		
	HT3M-5	SCREW (HIS) (73197)	1		
	2W18-10	WASHER, Flat (NA) (89372)	1		
	AN364-1032	NUT	1		
-47	HT4M-8	SCREW (HIS) (73197)	10		
-48	209-17041-11	FITTING ASSEMBLY, Leading edge actuator support aft inner panel 0% station 124.938 and station 83.549 LH	1		
	209-17041-12	FITTING ASSEMBLY, Leading edge actuator support aft inner panel 0% station 124.938 and station 83.549 RH	1		
	1191-4CNx-5/8	. INSERT, Heli-coil (AF) (91767)	1		
-49	NAS428-4-12	. BOLT	1		
-50	209-17050	. BUSHING, Droop nose leading edge inner panel aft fitting	2		
-51	1N7-4A	. NUT, Check (NA) (89372)	1		
-52	HT4M-12	SCREW (HIS) (73197)	4		
-53	2W18-416	WASHER, Flat (NA) (89372)	4		
-54	EB-048	NUT (EN) (72962)	4		
-55	HT4M-7	SCREW (HIS) (73197)	1		
-56	209-17040	FITTING ASSEMBLY, Leading edge actuator support forward inner panel 0% station 124.938	1		
	ATTACHING PARTS				
-57	209-917038-9	SCREW, Droop nose leading edge (NA Dwg Design Spec)	1		
	---*---				
-58	1191-4CNx-1/4	. INSERT, Heli-coil (AF) (91767)	1		
-59	4B19B4-004	. BUSHING, Press fit plain (NA) (89372)	2		
-60	HT4M-7	SCREW (HIS) (73197)	20		
-61	209-17047-5	SUPPORT, Leading edge droop nose rubbing strip	1		
	HT3M-5	SCREW (HIS) (73197)	1		
	2W18-10	WASHER, Flat (NA) (89372)	1		
	AN364-1032	NUT	1		
-62	209-17047-7	SUPPORT, Leading edge droop nose rubbing strip	1		
	HT3M-5	SCREW (HIS) (73197)	1		
	2W18-10	WASHER, Flat (NA) (89372)	1		
	AN364-1032	NUT	1		
-63	HT3M-5	SCREW (HIS) (73197) (under upper surface)	2		
	2W18-10	WASHER, Flat (NA) (89372) (under upper surface)	2		
	AN364-1032	NUT (under upper surface)	2		
-64	209-54262-1	FITTING, Leading edge stop 0% station 99.565 assembly of LH	1		
	209-54262-2	FITTING, Leading edge stop 0% station 99.565 assembly of RH	1		
	1191-4CNx-5/8	. INSERT, Heli-coil (AF) (91767)	2		
	5B2-12	BOLT, Adjustment (NA) (89372)	1		
	1N7-4A	NUT, Check (NA) (89372)	1		
-65	HT4M-11	SCREW (HIS) (73197)	2		
	2W18-416	WASHER, Flat (NA) (89372)	2		
	EB-048	NUT (EN) (72962)	2		
-66	209-17047-9	SUPPORT, Leading edge droop nose rubbing strip	1		
	HT3M-5	SCREW (HIS) (73197)	1		
	2W18-10	WASHER, Flat (NA) (89372)	1		
	AN364-1032	NUT	1		
-67	209-17041-21	FITTING ASSEMBLY, Actuator support aft inner panel station 124.948 and station 83.549 LH	1		
	209-17041-22	FITTING ASSEMBLY, Actuator support aft inner panel station 124.948 and station 83.549 RH	1		
	1191-4CNx-5/8	. INSERT, Heli-coil (AF) (91767)	1		
-68	5B2-12	. BOLT, Adjustment (NA) (89372)	1		
-69	209-17050	. BUSHING, Droop nose leading edge inner panel aft fitting	1		
-70	1N7-4A	. NUT, Check (NA) (89372)	1		
-71	HT5M-11A	SCREW (HIS) (73197)	2		
-72	2W18-516	WASHER, Flat (NA) (89372)	2		
-73	EB-054	NUT (EN) (72962)	2		
-74	HT4M-12	SCREW (HIS) (73197)	2		
-75	2W18-416	WASHER, Flat (NA) (89372)	2		
-76	EB-048	NUT (EN) (72962)	2		
-77	209-17049	FITTING ASSEMBLY, Leading edge actuator support forward inner panel 0% station 83.549	1		
	ATTACHING PARTS				
-78	209-917038-9	SCREW, Droop nose leading edge (NA Dwg Design Spec)	1		
	---*---				
-79	1191-4CNx-1/4	. INSERT, Heli-coil (AF) (91767)	1		
-80	4B19B4-004	. BUSHING, Press fit plain (NA) (89372)	2		
-81	209-17047-11	SUPPORT, Leading edge droop nose rubbing strip	1		

DROOP AND LEADING EDGE ASSEMBLIES

FIGURE & INDEX NO.	PART NUMBER	1 2 3 4 5 6 7 NOMENCLATURE	UNITS PER ASSY.	USABLE ON CODE	S/C NO.
18	HT3M-5	SCREW (HIS) (73197)	1		
	2W18-10	WASHER, Flat (NA) (89372)	1		
	AN364-1032	NUT	1		
-82	209-17034-1	FITTING ASSEMBLY, Leading edge stop inner panel inner 0% station 63.069	1		
	209-17034-2	FITTING ASSEMBLY, Leading edge stop inner panel inner 0% station 63.069	1		
	ATTACHING PARTS				
-83	HT5M-11	SCREW (HIS) (73197)	1		
-84	2W18-516	WASHER, Flat (NA) (89372)	1		
-85	EB-054	NUT (EN) (72962)	1		
-86	HT5M-12	SCREW (HIS) (73197)	1		
-87	2W18-516	WASHER, Flat (NA) (89372)	1		
-88	EB-054	NUT (EN) (72962)	1		
	---*---				
-89	NAS428-4-14	. BOLT	1		
	1191-4CNx-5/8	. INSERT, Heli-coil (AF) (91767)	1		
-90	1N7-4A	. NUT, Check (NA) (89372)	1		
-91	209-17031-1	RUBBING STRIP ASSEMBLY, Droop nose leading edge inner panel inner	1		
	209-17031-2	RUBBING STRIP ASSEMBLY, Droop nose leading edge inner panel inner	1		
-92	209-17004-1	DROOP NOSE ASSEMBLY, Leading edge inner panel inner LH	1	515	
	209-17004-2	DROOP NOSE ASSEMBLY, Leading edge inner panel inner RH	1	515	
-93	209-17010-3	. HINGE, Droop nose leading edge inner panel inner LH	1		
	209-17010-4	. HINGE, Droop nose leading edge inner panel inner RH	1		
-94	10B1-4-3-3	. BONDING, Jumper (NA) (89372)	2		
	2W18-10M	. WASHER, Flat (NA) (89372)	2		
	AN509-10R14	. SCREW	2		
	AN364-1032	. NUT	2		
-95	209-17062-1	. BRACKET, Leading edge wing 0% station 99.565 LH	1		
	209-17062-2	. BRACKET, Leading edge wing 0% station 99.565 RH	1		
	ATTACHING PARTS				
-96	NAS221-10	. SCREW	8		
-97	2W18-10	. WASHER, Flat (NA) (89372)	8		
	3600-02	. NUT, Anchor (NUS) (80539)	8		
-98	AN365-1032	. NUT	6		
-99	2W18-10M	. WASHER, Flat (NA) (89372)	6		
-100	AN509-10R14	. SCREW	6		
	---*---				
-101	209-17060-1	. STOP, Wing station 111.933 barrier strap	1		
-102	209-14024-1	FENCE, Inboard wing station 151.207 aft LH	1		
	209-14024-2	FENCE, Inboard wing station 151.207 aft RH	1		
	ATTACHING PARTS				
	AN509-416R12	SCREW	2		
	860-515-3/32-9/32	SEAL, Washer (WFRC) (83259)	4		
	---*---				
-103	209-17045-11	PIN ASSEMBLY, Droop nose leading edge	1	A	
	209-17045-51	PIN ASSEMBLY, Droop nose leading edge	1	B	
-104	209-17010-9	HINGE, Droop nose leading edge inner panel inner LH	1		
	209-17010-10	HINGE, Droop nose leading edge inner panel inner RH	1		
-105	NAS334CPA7	BOLT	53		
	2W18-416	WASHER, Flat (NA) (89372)	53		
	EB-048	NUT (EN) (72962)	53		
-106	209-14226-1	LEADING EDGE ASSEMBLY, Inboard wing root LH (superseded by 209-14038-1 for future procurement) (see figure 10 for additional breakdown)	1		
	209-14226-2	LEADING EDGE ASSEMBLY, Inboard wing root RH (superseded by 209-14038-2 for future procurement) (see figure 10 for additional breakdown)	1		
	209-14038-1	LEADING EDGE ASSEMBLY, Inboard wing LH (superseded by 209-14226-1 for future procurement) (see figure 10 for additional breakdown)	1		
	209-14038-2	LEADING EDGE ASSEMBLY, Inboard wing RH (supersedes 209-14226-2 for future procurement) (see figure 10 for additional breakdown)	1		
	ATTACHING PARTS				
-107	NAS335CPA-7	. BOLT	1		
	NA2648-054	. NUT, Anchor (EN) (72962)	1		
-108	NAS334CPA6-5	. BOLT	8		
	G1000-428-10-4	. NUT, Channel (KNM) (75237)	2		
-109	NAS334CPA6-5	. BOLT	3		
	G1000-428-10-3	. NUT, Channel (KNM) (75237)	1		
-110	NAS334CPA6-5	. BOLT	1		
	NA2648-048	. NUT, Anchor (EN) (72962)	1		
-111	NAS334CPA6-5	. BOLT	1		
	NA2647-048	. NUT, Anchor (EN) (72962)	1		
-112	NAS334CPA10	. BOLT	1		
	NA2647-048	. NUT, Anchor (EN) (72962)	1		
-113	209-17045-31	. PIN ASSEMBLY, Droop nose leading edge	1	A	
	209-17045-61	. PIN ASSEMBLY, Droop nose leading edge	1	B	
	---*---				
-114	209-14152-41	. SEAL ASSEMBLY, Leading edge ammunition bay clearance door LH (used on 209-14226-1 only)	1		
	209-14152-42	. SEAL ASSEMBLY, Leading edge ammunition bay clearance door RH (used on 209-14226-2 only)	1		
-115	209-14038-21	. LEADING EDGE SUBASSEMBLY, Inboard wing (used on 209-14038-1 and -2 - only)	1		

DROOP AND LEADING EDGE ASSEMBLIES

FIGURE & INDEX NO.	PART NUMBER	1	2	3	4	5	6	7	NOMENCLATURE	UNITS PER ASSY.	USABLE ON CODE	S/C NO.
18-116	209-14152-51	.							SEAL ASSEMBLY, Leading edge ammunition bay clearance door LH (used on 209-14226-1 only)	1		
	209-14152-52	.							SEAL ASSEMBLY, Leading edge ammunition bay clearance door RH (used on 209-14226-2 only)	1		
-117	209-14152-1	.							SEAL ASSEMBLY, Leading edge ammunition bay clearance door LH (used on 209-14226-1 only)	1		
	209-14152-2	.							SEAL ASSEMBLY, Leading edge ammunition bay clearance door RH (used on 209-14226-2 only)	1		
-118	209-14153-3	.							SEAL BLOCK, Leading edge ammunition bay clearance door LH	1		
	209-14153-4	.							SEAL BLOCK, Leading edge ammunition bay clearance door RH	1		
-119	209-17048-3	.							HINGE, Inner panel fixed LH	1		
	209-17048-4	.							HINGE, Inner panel fixed RH	1		
-120	209-17048-5	.							HINGE, Inner panel fixed LH	1		
	209-17048-6	.							HINGE, Inner panel fixed RH	1		
	ATTACHING PARTS											
-121	NAS334CPA7	.							BOLT	10		
-122	2W18-416	.							WASHER, Flat (NA) (89372)	10		
-123	EB-048	.							NUT (EN) (72962)	10		
-124	NAS334CPA7-5	.							BOLT	2		
-125	2W18-416	.							WASHER, Flat (NA) (89372)	2		
-126	EB-048	.							NUT (EN) (72962)	2		
-127	NAS334CPA7	.							BOLT	3		
-128	NA2648-048	.							NUT, Anchor (EN) (72962)	3		
	2W18-416	.							WASHER, Flat (NA) (89372)	3		
-129	NAS335CPA7	.							BOLT	2		
-130	2W18-516	.							WASHER, Flat (NA) (89372)	2		
-131	EB-054	.							NUT (EN) (72962)	2		
	---*---											
-132	209-14021-1	.							HINGE BLOCK, Leading edge ammunition bay clearance door LH (used on 209-14226-1 only)	1		
	209-14021-2	.							HINGE BLOCK, Leading edge ammunition bay clearance door RH (used on 209-14226-2 only)	1		
-133	209-14229-1	.							HINGE, Leading edge ammunition bay clearance door outboard LH (used on 209-14226-1 only)	1		
	209-14229-2	.							HINGE, Leading edge ammunition bay clearance door outboard RH (used on 209-14226-2 only)	1		
-134	209-14227	.							HINGE, Leading edge ammunition bay clearance door inboard (used on 209-14226-1 and -2 only)	1		
-135	AN509-8-14	.							SCREW (used on 209-14226-1 and -2 only)	1		
	2W18-8	.							WASHER, Flat (NA) (89372) (used on 209-14226-1 and -2 only)	1		
	NAS43-3-26	.							SPACER (used on 209-14226-1 and -2 only)	1		
	AN365-832	.							NUT (used on 209-14226-1 and -2 only)	1		
-136	2W1-12-10-032	.							WASHER, Plain (NA) (89372) (used on 209-14226-1 and -2 only)	5		
-137	AN393-81	.							PIN (used on 209-14226-1 and -2 only)	1		
-138	AN749-1-4	.							JUMPER (used on 209-14226-1 and -2 only)	1		
	ATTACHING PARTS											
	AN509-8-10	.							SCREW (used on 209-14226-1 and -2 only)	2		
	2W18-8	.							WASHER, Flat (NA) (89372) (used on 209-14226-1 and -2 only)	2		
	AN365-832	.							NUT (used on 209-14226-1 and -2 only)	2		
	---*---											
-139	209-14020-1	.							SPRING, Leading edge ammunition bay clearance door leaf LH (used on 209-14226-1 only)	1		
	209-14020-2	.							SPRING, Leading edge ammunition bay clearance door leaf RH (used on 209-14226-2 only)	1		
	209-14020-3	.							SPRING, Leading edge ammunition bay clearance door leaf LH (used on 209-14226-1 only)	1		
	209-14020-4	.							SPRING, Leading edge ammunition bay clearance door leaf RH (used on 209-14226-2 only)	1		
-140	209-17059-1	.							STOP, Wing station 47.160 barrier strap LH	1		
	209-17059-2	.							STOP, Wing station 47.160 barrier strap RH	1		

REAR SPAR TO TRAILING EDGE, AILERON AND FLAP ATTACHING PARTS

FIGURE & INDEX NO.	PART NUMBER	1 2 3 4 5 6 7 NOMENCLATURE	UNITS PER ASSY.	USABLE ON CODE	S/C NO.
19-1	AN364-524	NUT	1		
-2	2W18-516	WASHER, Flat (NA) (89372)	2		
-3	NAS464-5A19	BOLT	1		
-4	209-16020	BUSHING, Aileron outboard hinge bearing inner	1		
-5	EB-054	NUT (EN) (72962)	1		492
-6	2W18-516	WASHER, Flat (NA) (89372)	1		492
-7	MS20005-29	BOLT	1		492
-8	2W10-5	WASHER, Countersunk (NA) (89372)	1		492
-9	209-16016	FITTING ASSEMBLY, Aileron outboard hinge	1	ET	492
	209-16016-11	FITTING ASSEMBLY, Aileron outboard hinge	1		492
-10	B-78-POH	. BEARING (TOR) (60380)	1		
-11	NAS516-1	. FITTING, Lubricator	1		
-12	2P7-9-10-1/2	PIN ASSEMBLY, Hinge (NA) (89372)	1		
-13	2P7-9-20	PIN ASSEMBLY, Hinge (NA) (89372)	1		
-14	2P7-9-29-1/8	PIN ASSEMBLY, Hinge (NA) (89372)	1		
-15	2P7-9-30-15/16	PIN ASSEMBLY, Hinge (NA) (89372)	1		
-16	2P7-9-10-7/16	PIN ASSEMBLY, Hinge (NA) (89372)	1		
-17	2P7-9-16-7/16	PIN ASSEMBLY, Hinge (NA) (89372)	1		
-18	AN364-1018	NUT	1	FR	
-19	2W18-1016	WASHER, Flat (NA) (89372)	1		
-20	209-14497	BOLT, Aileron center hinge to wing attaching	1		
-21	2W18-1216	WASHER, Flat (NA) (89372)	1		
-22	209-16022	BUSHING, Thrust aileron center hinge	2		
-23	AN364-428	NUT	1		
-24	2W18-416	WASHER, Flat (NA) (89372)	2		
-25	NAS464-4A19	BOLT	1		
-26	165-16012	RACE, Inboard and outboard hinge bearing inner	1		
-27	EB-048	NUT (EN) (72962)	1	ET	
	EB-054	NUT (EN) (72962)	1	FR	
-28	2W18-416	WASHER, Flat (NA) (89372)	1	ET	
	2W18-516	WASHER, Flat (NA) (89372)	1	FR	
-29	MS20004-29	BOLT	1	ET	
	MS20005-29	BOLT	1	FR	
-30	2W10-4	WASHER, Countersunk (NA) (89372)	1	ET	
	2W10-5	WASHER, Countersunk (NA) (89372)	1	FR	
-31	209-16007	FITTING ASSEMBLY, Aileron inboard hinge	1	ET	492
	209-16007-11	FITTING ASSEMBLY, Aileron inboard hinge	1		492
-32	B-68-POH	. . BEARING (TOR) (60380)	1		
-33	NAS516-1	. FITTING, Lubricator	1		
-34	AN364-428	NUT	1		
-35	2W18-416	WASHER, Flat (NA) (89372)	2		
-36	NAS464-4A19	BOLT	1		
-37	165-16012	RACE, Inboard and outboard hinge bearing inner	1		
-38	2P7-9-54-1/16	PIN ASSEMBLY, Hinge (NA) (89372)	1		
-39	2P7-9-33-15/16	PIN ASSEMBLY, Hinge (NA) (89372)	1		
-40	2P7-9-17-5/8	PIN ASSEMBLY, Hinge (NA) (89372)	1		
-41	2P7-9-12-7/16	PIN ASSEMBLY, Hinge (NA) (89372)	1		
-42	2P7-9-30-11/32	PIN ASSEMBLY, Hinge (NA) (89372)	1		
-43	AN320-4	NUT	3		
-44	2W18-416	WASHER, Flat (NA) (89372)	3		
-45	AN24-16	BOLT	3		
-46	2W16-416M	WASHER, Flat (NA) (89372) (use under bolthead)	3		
-47	AN364-428	NUT	3		
-48	2W18-416	WASHER, Flat (NA) (89372)	6		
-49	NAS464-4A16	BOLT	3		
-50	4B21M-S4-017	BUSHING, Spacer (NA) (89372)	3		
-51	AN320-3	NUT	3		
-52	2W18-10	WASHER, Flat (NA) (89372)	6		
-53	AN23-14	BOLT	3		
-54	209-18528	LINK ASSEMBLY, Flap slot door actuator	3		
	LSS3	. BEARING (HEC) (73134)	1		
	NAS516-1	. FITTING, Lubricator	1		
-55	AN320-3	NUT	3		
-56	2W18-10	WASHER, Flat (NA) (89372)	3		
-57	NAS333P7	SCREW	3		
-58	AN320-4	NUT	3		
-59	2W18-416	WASHER, Flat (NA) (89372)	6		
-60	AN24-14	BOLT	3		
	209-18540-11	ROD ASSEMBLY, Flat slot door actuator linkage	3		
-61	209-18101-4	. ROD END, Flat actuator linkage (RH thread) (make from HM-4(HEC) (73134)	1		
-62	1N7-4A	. NUT, Check (NA) (89372) (RH thread)	1		
-63	209-18102	. ROD, Flap slot door actuator linkage	1		
-64	209-18101-3	. ROD END, Flap actuator linkage (LH thread) (make from HML-4 (HEC) (73134))	1		
-65	1N7-4LA	. NUT, Check (NA) (89372) (LH thread)	1		
-66	209-18527-22	BELLCRANK ASSEMBLY, Flat slot door actuator RH (use at flap station 42.705 on LH side only)	1		
	209-18527-21	BELLCRANK ASSEMBLY, Flap slot door actuator LH (use at flap station 42.705 on RH side only)	1		
	209-18527-21	BELLCRANK ASSEMBLY, Flat slot door actuator LH (use at flap station 81.332 and station 60.705 on LH side only)	2		
	209-18527-22	BELLCRANK ASSEMBLY, Flap slot door actuator RH (use at flap station 81.332 and station 60.705 on RH side only)	2		

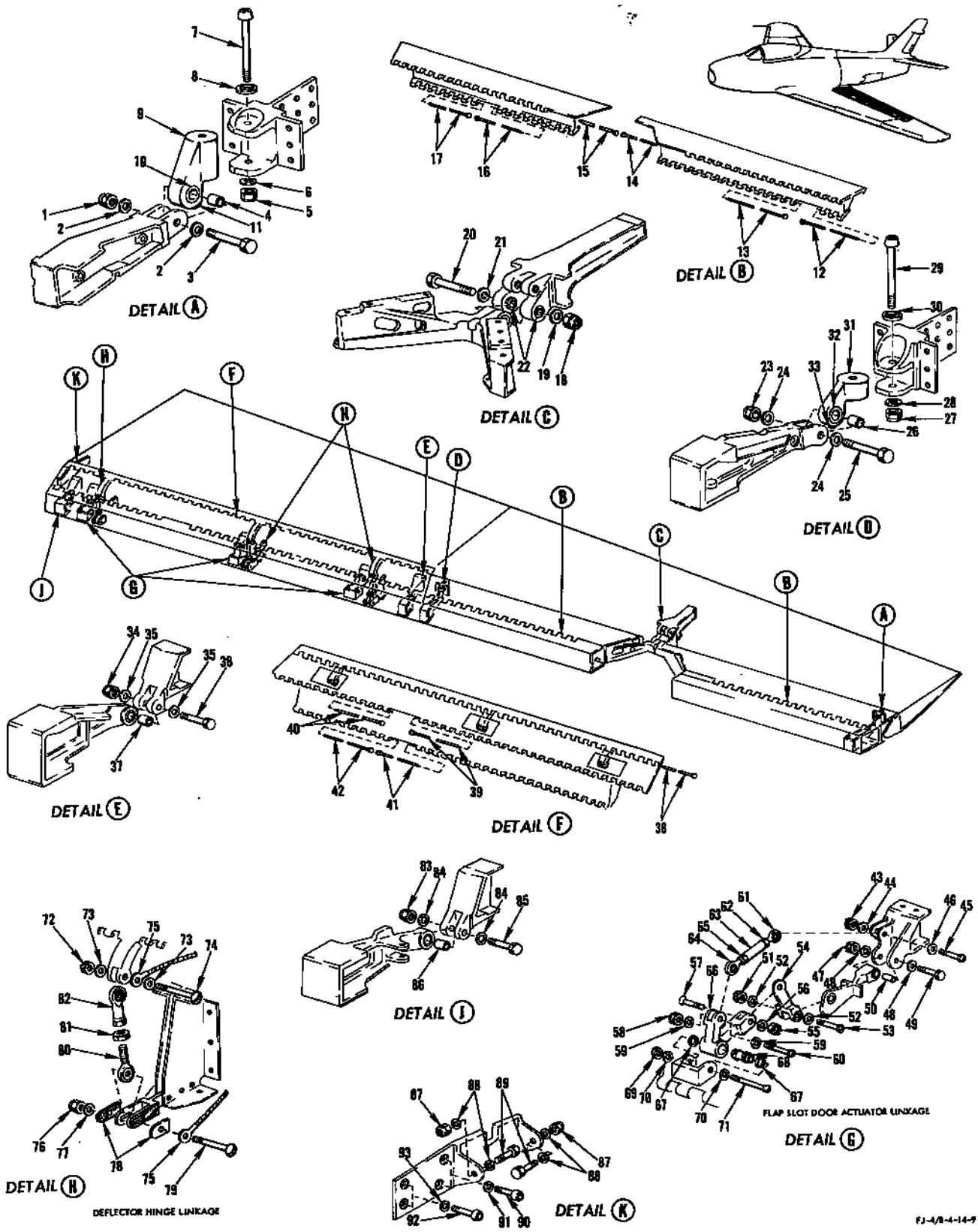

FIGURE 19 - REAR SPAR TO TRAILING EDGE, AILERON AND FLAP ATTACHING PARTS

REAR SPAR TO TRAILING EDGE, AILERON AND FLAP ATTACHING PARTS

FIGURE & INDEX NO.	PART NUMBER	1 2 3 4 5 6 7 NOMENCLATURE	UNITS PER ASSY.	USABLE ON CODE	S/C NO.
19-67	AN201KP3A	. BEARING	2		
-68	4S7-1-0.562	. SPACER, Flanged dual bearing (NA) (89372)	1		
-69	AN320-3	NUT	3		
-70	2W18-10	WASHER, Flat (NA) (89372)	6		
-71	AN23-30	BOLT	3		
-72	AN320-3	NUT	3		
-73	2W18-10	WASHER, Flat (NA) (89372)	6		
-74	AN23-15	BOLT	3		
-75	AN749-3-4	JUMPER	3		
-76	AN364-1032	NUT	3		
-77	2W18-10	WASHER, Flat (NA) (89372)	3		
-78	209-18094	WASHER, Flap shroud deflector serrated	6		
-79	AN23-19A	BOLT	3		
-80	HM-3	BEARING, Rod end (HEC) (73134) (use at flap station 79)	1		
	HM-3B	BEARING, Rod end (HEC) (73134) (use at flap station 64)	1		
	HM-3D	BEARING, Rod end (HEC) (73134) (use at flap station 45)	1		
-81	AN364-1032	NUT	3		
-82	HF-3G	BEARING, Rod end (HEC) (73134)	3		
-83	AN364-428	NUT	1		
-84	2W18-416	WASHER, Flat (NA) (89372)	2		
-85	NAS464-4A19	BOLT	1		
-86	165-16012	RACE, Inboard and outboard hinge bearing inner	1		
-87	AN364-624	NUT	2		
-88	2W18-616	WASHER, Flat (NA) (89372)	4		
-89	NAS464-6A11	BOLT	2		
-90	MS20006-10	BOLT	2		
-91	2W18-616	WASHER, Flat (NA) (89372)	2		
-92	MS20006-8	BOLT	2		
-93	2W18-616	WASHER, Flat (NA) (89372)	2		

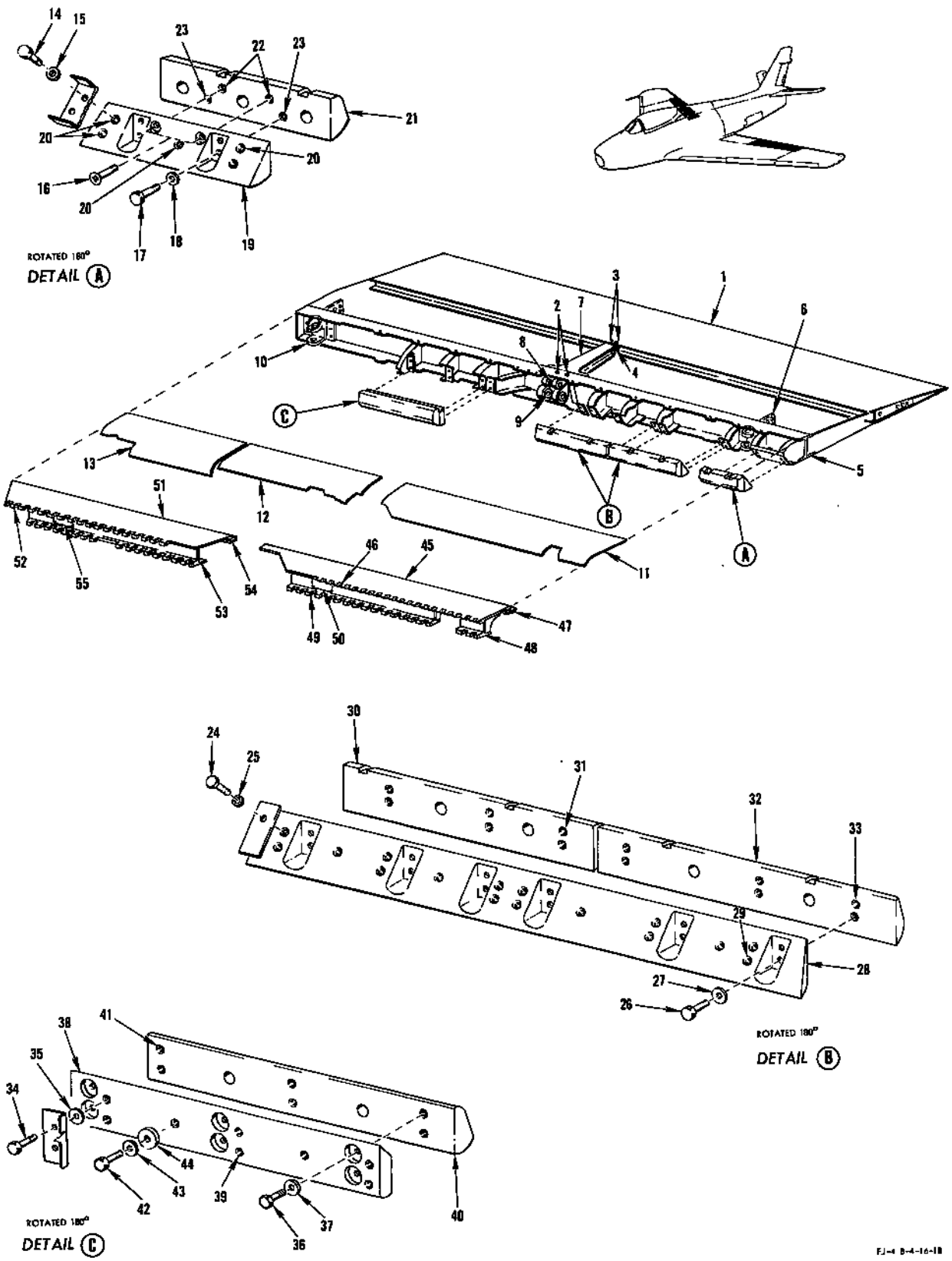

FIGURE 20 - TRAILING EDGE AND AILERON FRAME ASSEMBLY

TRAILING EDGE AND AILERON FRAME ASSEMBLY

FIGURE & INDEX NO.	PART NUMBER	1 2 3 4 5 6 7 NOMENCLATURE	UNITS PER ASSY.	USABLE ON CODE	S/C NO.
20	209-16002-51	STRUCTURE ASSEMBLY, Aileron LH (supersedes 209-16002-1 for future procurement)	1	ET	442, 492
	209-16002-71	STRUCTURE ASSEMBLY, Aileron LH	1	FR	510
	209-16002-52	STRUCTURE ASSEMBLY, Aileron RH (supersedes 209-16002-2 for future procurement)	1	ET	442, 492
	209-16002-72	STRUCTURE ASSEMBLY, Aileron RH	1	FR	510
-1	209-16005-1	. TRAILING EDGE ASSEMBLY, Aileron honeycomb sandwich structure LH	1	ET	
	209-16005-101	. TRAILING EDGE ASSEMBLY, Aileron honeycomb sandwich structure LH	1	FR	
	209-16005-2	. TRAILING EDGE ASSEMBLY, Aileron honeycomb sandwich structure RH	1	ET	
	209-16005-102	. TRAILING EDGE ASSEMBLY, Aileron honeycomb sandwich structure RH	1	FR	
	209-16005-3	. . PANEL ASSEMBLY, Aileron trailing edge honeycomb LH (make from 209-16006-1)	1	ET	
	209-16005-39	. . PANEL ASSEMBLY, Aileron trailing edge honeycomb LH (make from 209-16006-21)	1	FR	
	209-16005-4	. . PANEL ASSEMBLY, Aileron trailing edge honeycomb RH (make from 209-16006-2)	1	ET	
	209-16005-40	. . PANEL ASSEMBLY, Aileron trailing edge honeycomb RH (make from 209-16006-21)	1	FR	
-2	NAS333PA6	. BOLT (use two on upper and two on lower surface)	4		
	2W18-10M	. WASHER, Flat (NA) (89372) (use two on upper and two on lower surface)	4		
	AN365-1032	. NUT (use two on upper and two on lower surface)	4		
-3	NAS333PA5	. BOLT (use two on upper and two on lower surface)	4		
	2W18-10M	. WASHER, Flat (NA) (89372) (use two on upper and two on lower surface)	4		
	AN365-1032	. NUT (use two on upper and two on lower surface)	4		
-4	BL8-4	. BALL-LOK PIN (D. W. Price Corporation) (97978)	2		
-5	209-16004-101	. SPAR ASSEMBLY, Aileron LH (supersedes 209-16004-1 for future procurement)	1		
	209-16004-102	. SPAR ASSEMBLY, Aileron RH (supersedes 209-16004-2 for future procurement)	1		
-6	209-16010-1	. . HINGE, Aileron outboard LH	1		492
	209-16010-2	. . HINGE, Aileron outboard RH	1		492
-7	209-16009-21	. . HINGE ASSEMBLY, Aileron center LH (supersedes 209-16009-1) for future procurement)	1		
	209-16009-22	. . HINGE ASSEMBLY, Aileron center RH (supersedes 209-16009-2) for future procurement)	1		
-8	209-16025	. . . BUSHING, Actuator attaching center hinge	4		
-9	209-16023	. . . BUSHING, Flanged bearing aileron center hinge	2		
	209-16024	. . . BUSHING, Bearing aileron center hinge	2		
	NAS516-1	. . . FITTING, Lubricator (upper surface)	2		
	MS15001-1	. . . FITTING, Lubricator (lower surface)	2		
-10	209-16008-1	. . HINGE, Aileron inboard LH	1		492
	209-16008-2	. . HINGE, Aileron inboard RH	1		492
-11	209-16002-43	. SKIN, Aileron structure assembly LH (titanium alloy sheet)	1		
	209-16002-44	. SKIN, Aileron structure assembly RH (titanium alloy sheet)	1		
-12	209-16002-41	. SKIN, Aileron structure assembly LH (titanium alloy sheet)	1		
	209-16002-42	. SKIN, Aileron structure assembly RH (titanium alloy sheet)	1		
-13	209-16002-37	. SKIN, Aileron structure assembly LH (titanium alloy sheet)	1		
	209-16002-38	. SKIN, Aileron structure assembly RH (titanium alloy sheet)	1		
-14	AN4H4A	. BOLT	4		
-15	2W18-416M	. WASHER, Flat (NA) (89372)	4		
-16	AN509-10R10	. SCREW	2		
-17	AN4-5A	. BOLT	2		
-18	2W18-416M	. WASHER, Flat (NA) (89372)	2		
-19	209-16093-1	. ADAPTER ASSEMBLY, Aileron balance weight outboard LH (209-16093-1 together with 209-16088-1 supersedes 209-16042-11 for future procurement) (superseded by 209-16093-21 for future procurement)	1	ET	
	209-16093-21	. ADAPTER ASSEMBLY, Aileron balance weight outboard LH (supersedes 209-16093-1 for future procurement)	1	FR	
	209-16093-2	. ADAPTER ASSEMBLY, Aileron balance weight outboard RH (209-16093-2 together with 209-16088-2 supersedes 209-16042-12 for future procurement) (superseded by 209-16093-22 for future procurement)	1	ET	
	209-16093-22	. ADAPTER ASSEMBLY, Aileron balance weight outboard RH (supersedes 209-16093-2 for future procurement)	1	FR	
-20	1191-4CNx 1/4	. . INSERT, Heli-coil (AF) (91767)	5		
-21	209-16088-1	. WEIGHT ASSEMBLY, Aileron outboard balance LH (209-16088-1 together with 209-16093-1 supersedes 209-16042-11 for future procurement)	1		
	209-16088-2	. WEIGHT ASSEMBLY, Aileron outboard balance RH (209-16088-2 together with 209-16093-2 supersedes 209-16042-12 for future procurement)	1		
	209-16088-3	. . WEIGHT, Aileron outboard balance weight assembly LH (tungsten alloy high density)	1		
	209-16088-4	. . WEIGHT, Aileron outboard balance weight assembly RH (tungsten alloy high density)	1		
-22	3591-3CNx.285	. . INSERT, Heli-coil (AF) (91767)	2		
-23	3591-4CNx-3/8	. . INSERT, Heli-coil (AF) (91767)	2		
-24	AN4H4A	. BOLT	12		
-25	2W18-416M	. WASHER, Flat (NA) (89372)	12		
-26	AN4H5A	. BOLT	12		
-27	2W18-416M	. WASHER, Flat (NA) (89372)	12		
-28	209-16094-1	*1 . ADAPTER ASSEMBLY, Aileron balance weight intermediate LH	1		
	209-16094-2	*1 . ADAPTER ASSEMBLY, Aileron balance weight intermediate RH	1		

TRAILING EDGE AND AILERON FRAME ASSEMBLY

FIGURE & INDEX NO.	PART NUMBER	1	2	3	4	5	6	7	NOMENCLATURE	UNITS PER ASSY.	USABLE ON CODE	S/C NO.
20-29	1191-4CNx-1/4		.	.					INSERT, Heli-coil (AF) (91767)	16		
-30	209-16090-1	*1	.						WEIGHT ASSEMBLY, Aileron intermediate outboard balance LH	1		
	209-16090-2	*1	.						WEIGHT ASSEMBLY, Aileron intermediate outboard balance RH	1		
	209-16090-3		.	.					WEIGHT, Aileron intermediate outboard balance weight assembly LH (tungsten alloy high density)	1		
	209-16090-4		.	.					WEIGHT, Aileron intermediate outboard balance weight assembly RH (tungsten alloy high density)	1		
-31	3591-4CNx-3/8		.	.					INSERT, Heli-coil (AF) (91767)	6		
-32	209-16091-1	*1	.						WEIGHT ASSEMBLY, Aileron intermediate inboard balance LH	1		
	209-16091-2	*1	.						WEIGHT ASSEMBLY, Aileron intermediate inboard balance RH	1		
	209-16091-3		.	.					WEIGHT, Aileron intermediate inboard balance weight assembly LH (tungsten alloy high density)	1		
	209-16091-4		.	.					WEIGHT, Aileron intermediate inboard balance weight assembly RH (tungsten alloy high density)	1		
-33	3591-4CNx-3/8		.	.					INSERT, Heli-coil (AF) (91767)	6		
-34	AN4H4A		.						BOLT	6		
-35	2W16-416M		.						WASHER, Flat (NA) (89372)	6		
-36	AN4H5A		.						BOLT	6		
-37	2W18-416M		.						WASHER, Flat (NA) (89372)	6		
-38	209-16092-1	*2	.						ADAPTER ASSEMBLY, Aileron balance weight inboard LH	1	ET	
	209-16092-11	*2	.						ADAPTER ASSEMBLY, Aileron balance weight inboard LH	1	FR	
	209-16092-2	*2	.						ADAPTER ASSEMBLY, Aileron balance weight inboard RH	1	ET	
	209-16092-12		.						ADAPTER ASSEMBLY, Aileron balance weight inboard RH	1	FR	
-39	1191-4CNx-3/8		.	.					INSERT, Heli-coil (AF) (91767)	8		
-40	209-16089-1	*2	.						WEIGHT ASSEMBLY, Aileron inboard balance LH	1		
	209-16089-2	*2	.						WEIGHT ASSEMBLY, Aileron inboard balance RH	1		
	209-16089-3		.	.					WEIGHT, Aileron inboard balance weight assembly LH (tungsten alloy high density)	1		
	209-16089-4		.	.					WEIGHT, Aileron inboard balance weight assembly RH (tungsten alloy high density)	1		
-41	1191-4CNx-1/4		.	.					INSERT, Heli-coil (AF) (91767)	6		
-42	AN4H		.						BOLT (use as required to attach 209-16002-31 weights - length to be determined by number of weights used)	AR		
-43	2W1-17-24-063		.						WASHER, Plain (NA) (89372)	AR		
-44	209-16002-31		.						WEIGHT, Aileron structure assembly (use as required by adding a maximum of 3 weights to any or all of the eleven points on all adapters)	AR		
-45	209-14485-1								DOOR ASSEMBLY, Inboard wing trailing edge aileron station 138.587 to station 180.277 LH	1		
	209-14485-2								DOOR ASSEMBLY, Inboard wing trailing edge aileron station 138.587 to station 180.277 RH	1		
-46	209-14487-3		.						HINGE, Inboard wing trailing edge aileron station 138.344 to station 180.277 upper LH	1		
	209-14487-4		.						HINGE, Inboard wing trailing edge aileron station 138.344 to station 180.277 upper RH	1		
-47	209-144142-1		.						SEAL, Inboard wing trailing edge aileron station 140.594 to station 180.188 LH	1		
	209-144142-2		.						SEAL, Inboard wing trailing edge aileron station 140.594 to station 180.188 RH	1		
-48	209-14486-7		.						JOINT, Inboard wing trailing edge aileron station 142.625 to station 177.844 lower LH	1		
	209-14486-8		.						JOINT, Inboard wing trailing edge aileron station 142.625 to station 177.844 lower RH	1		
-49	209-14486-3		.						JOINT, Inboard wing trailing edge aileron station 142.625 to station 177.844 lower LH	1		
	209-14486-4		.						JOINT, Inboard wing trailing edge aileron station 142.625 to station 177.844 lower RH	1		
-50	5P48		.						PLATE, Navy identification and modification (NA) (89372)	1		
-51	209-14475-1								DOOR ASSEMBLY, Inboard wing trailing edge aileron station 88.973 to station 127.656 LH	1	ET	
	209-14475-11								DOOR ASSEMBLY, Inboard wing trailing edge aileron station 88.973 to station 127.656 LH	1	FR	
	209-14475-2								DOOR ASSEMBLY, Inboard wing trailing edge aileron station 88.973 to station 127.656 RH	1	ET	
	209-14475-12								DOOR ASSEMBLY, Inboard wing trailing edge aileron station 88.973 to station 127.656 RH	1	FR	
-52	209-14477-1		.						HINGE, Inboard trailing edge aileron door upper LH	1		
	209-14477-2		.						HINGE, Inboard trailing edge aileron door upper RH	1		
-53	209-14476-1		.						JOINT, Inboard wing trailing edge aileron station 92.067 to aileron station 127.656 lower LH	1	ET	
	209-14476-7		.						JOINT, Inboard wing trailing edge aileron station 92.067 to aileron station 127.656 lower LH	1	FR	
	209-14476-2		.						JOINT, Inboard wing trailing edge aileron station 92.067 to aileron station 127.656 lower RH	1	ET	
	209-14476-8		.						JOINT, Inboard wing trailing edge aileron station 92.067 to aileron station 127.656 lower RH	1	FR	
-54	209-144141-1		.						SEAL, Inboard wing trailing edge aileron station 88.973 to station 126.598 LH	1		
	209-144141-2		.						SEAL, Inboard wing trailing edge aileron station 88.973 to station 126.598 RH	1		
-55	5P48		.						PLATE, Navy identification and modification (NA) (89372)	1		

NOTE: *1 209-16094-1 and -2 together with 209-16090-1 and -2 and 209-16091-1 and -2 supersede 209-16042-21, -22, -31, and -32 for future procurement.

*2 209-16092-1 and -2 or 209-16092-11 and -12 together with 209-16089-1 and -2 supersede 209-16040-1 and -2 for future procurement.

TRAILING EDGE, SPOILERS AND FLAP FRAME ASSEMBLIES

FIGURE & INDEX NO.	PART NUMBER	1 2 3 4 5 6 7 NOMENCLATURE	UNITS PER ASSY.	USABLE ON CODE	S/C NO.
21	209-18002-201	STRUCTURE ASSEMBLY, Flap complete LH (supersedes 209-18002-101 for future procurement)	1	ET	442
	209-18002-301	STRUCTURE ASSEMBLY, Flap complete LH	1		
	209-18002-202	STRUCTURE ASSEMBLY, Flap complete RH (supersedes 209-18002-102 for future procurement)	1	ET	442
	209-18002-302	STRUCTURE ASSEMBLY, Flap complete RH	1		
-1	209-18002-61	. SKIN, Flap complete structure assembly LH (commercially pure titanium)	1	ET	
	209-18002-62	. SKIN, Flap complete structure assembly RH (commercially pure titanium)	1	ET	
-2	209-18008-101	. SPAR ASSEMBLY, Flap LH (front)	1	ET	
	209-18008-102	. SPAR ASSEMBLY, Flap RH (front)	1	ET	
-3	5P48	. PLATE, Navy identification and modification (NA) (89372)	1	ET	
-4	209-18047-101	. SKIN ASSEMBLY, Flap lower honeycomb LH	1	ET	
	209-18047-102	. SKIN ASSEMBLY, Flap lower honeycomb RH	1	ET	
-5	209-18046-101	. SKIN ASSEMBLY, Flap upper honeycomb LH	1	ET	
	209-18046-102	. SKIN ASSEMBLY, Flap upper honeycomb RH	1	ET	
-6	209-18091-201	. SPAR ASSEMBLY, Flap rear LH (supersedes 209-18091-101 for future procurement)	1	ET	
	209-18091-202	. SPAR ASSEMBLY, Flap rear RH (supersedes 209-18091-102 for future procurement)	1	ET	
-7	209-18005-1	. TRAILING EDGE ASSEMBLY, Flap LH (used on 209-18002-101 only)	1	ET	
	209-18005-101	. TRAILING EDGE ASSEMBLY, Flap LH (used on 209-18002-201 only)	1	ET	
	209-18005-2	. TRAILING EDGE ASSEMBLY, Flap RH (used on 209-18002-102 only)	1	ET	
	209-18005-102	. TRAILING EDGE ASSEMBLY, Flap RH (used on 209-18002-202 only)	1	ET	
	209-18005-37	. . PANEL ASSEMBLY, Flap trailing edge honeycomb flap pattern LH (make from 209-18099-1)	1	ET	
	209-18005-38	. . PANEL ASSEMBLY, Flap trailing edge honeycomb flap pattern RH (make from 209-18099-2)	1	ET	
-8	209-18005-35	. . SEAL, Flap trailing edge assembly (used on 209-18005-1 and 209-18005-2)	1	ET	
	209-18113-1	. . RIB, Canted flap station 32.453 trailing edge LH (supersedes 209-18039-1 for future procurement) (used on 209-18005-1)	1	ET	
	209-18113-2	. . RIB, Canted flap station 32.453 trailing edge RH (supersedes 209-18039-2 for future procurement) (used on 209-18005-2)	1	ET	
-9	209-18113-5	. . . SEAL, Canted flap station 32.453 trailing edge rib	1	ET	
-10	209-18005-25	. . STRAND, Glass fiber flap trailing edge assembly	3	ET	
-11	AN509-10R13	. SCREW	2	ET	
	2W18-10M	. WASHER, Flat (NA) (89372)	2	ET	
	AN365-1032	. NUT	2	ET	
-12	209-18007-3	. HINGE, Inboard and outboard flap (outboard)	1	ET	
-13	209-18050-9	. FITTING, Flap slot door hinge support LH (flap station 81.764)	1	ET	
	209-18050-10	. FITTING, Flap slot door hinge support RH (flap station 81.764)	1	ET	
-14	209-18093-7	. CLEVIS, Flap shroud deflector hinge support (flap station 79)	1	ET	
-15	209-18093-5	. CLEVIS, Flap shroud deflector hinge support (flap station 64)	1	ET	
-16	209-18050-11	. FITTING, Flap slot door hinge support LH (flap position 61.142)	1	ET	
	209-18050-12	. FITTING, Flap slot door hinge support RH (flap station 61.142)	1	ET	
-17	209-18093-3	. CLEVIS, Flap shroud deflector hinge support (flap station 45)	1	ET	
-18	209-18050-14	. FITTING, Flap slot door hinge support LH (flap station 42.269)	1	ET	
	209-18050-13	. FITTING, Flap slot door hinge support RH (flap station 42.269)	1	ET	
-19	AN509-10R13	. SCREW	2	ET	
	2W18-10M	. WASHER, Flat (NA) (89372)	2	ET	
	AN365-1032	. NUT	2	ET	
-20	209-18007-5	. HINGE, Inboard and outboard flap (inboard)	1	ET	
-21	209-18118-1	. SEAL, Flap to fuselage forward LH assembly of (used on 209-18002-201)	1	ET	
	209-18118-2	. SEAL, Flap to fusealge forward RH assembly of (used on 209-18002-202)	1	ET	
	ATTACHING PARTS				
	AN509-10R11	. SCREW (used on 209-18002-201 and 209-18002-202)	1	ET	
	AN509-10R12	. SCREW (used on 209-18002-201 and 209-18002-202)	2	ET	
	2W18-10	. WASHER, Flat (NA) (89372) (used on 209-18002-201 and 209-18002-202)	3	ET	
	AN365-1032	. NUT (used on 209-18002-201 and 209-18002-202)	3	ET	
	---*---				
-22	209-18117-1	. SEAL, Flap to fuselage aft LH assembly of (used on 209-18002-201)	1	ET	
	209-18117-2	. SEAL, Flap to fuselage aft RH assembly of (used on 209-18002-202)	1	ET	
-23	209-18002-81	. SEAL, Flap complete structure assembly LH (used on 209-18002-101)	1	ET	
	209-18002-82	. SEAL, Flap complete structure assembly RH (used on 209-18002-102)	1	ET	
	ATTACHING PARTS				
	AN509-10R11	. SCREW	1	ET	
	AN509-10R13	. SCREW	3	ET	
	2W18-10	. WASHER, Flat (NA) (89372)	4	ET	
	AN365-1032	. NUT	4	ET	
	---*---				
-24	209-18119-1	. SEAL, Flap to fuselage LH (used on 209-18002-201)	1	ET	
	209-18119-2	. SEAL, Flap to fuselage RH (used on 209-18002-202)	1	ET	
-25	209-18115-1	. EXTENSION, Inboard flap lower skin LH (used on 209-18002-101 only) (polyster glass fiber molding compound)	1	ET	
	209-18115-3	. EXTENSION, Inboard flap lower skin LH (polyster glass fiber molding compound)	1	ET	
	209-18115-2	. EXTENSION, Inboard flap lower skin RH (used on 209-18002-102 only) (polyster glass fiber molding compound)	1	ET	
	209-18115-4	. EXTENSION, Inboard flap lower skin RH (polyster glass fiber molding compound)	1	ET	
	ATTACHING PARTS				
	AN509-10R12	. SCREW	2	ET	
	2W18-10	. WASHER, Flat (NA) (89372)	2	ET	
	AN365-1032	. NUT	2	ET	
	---*---				

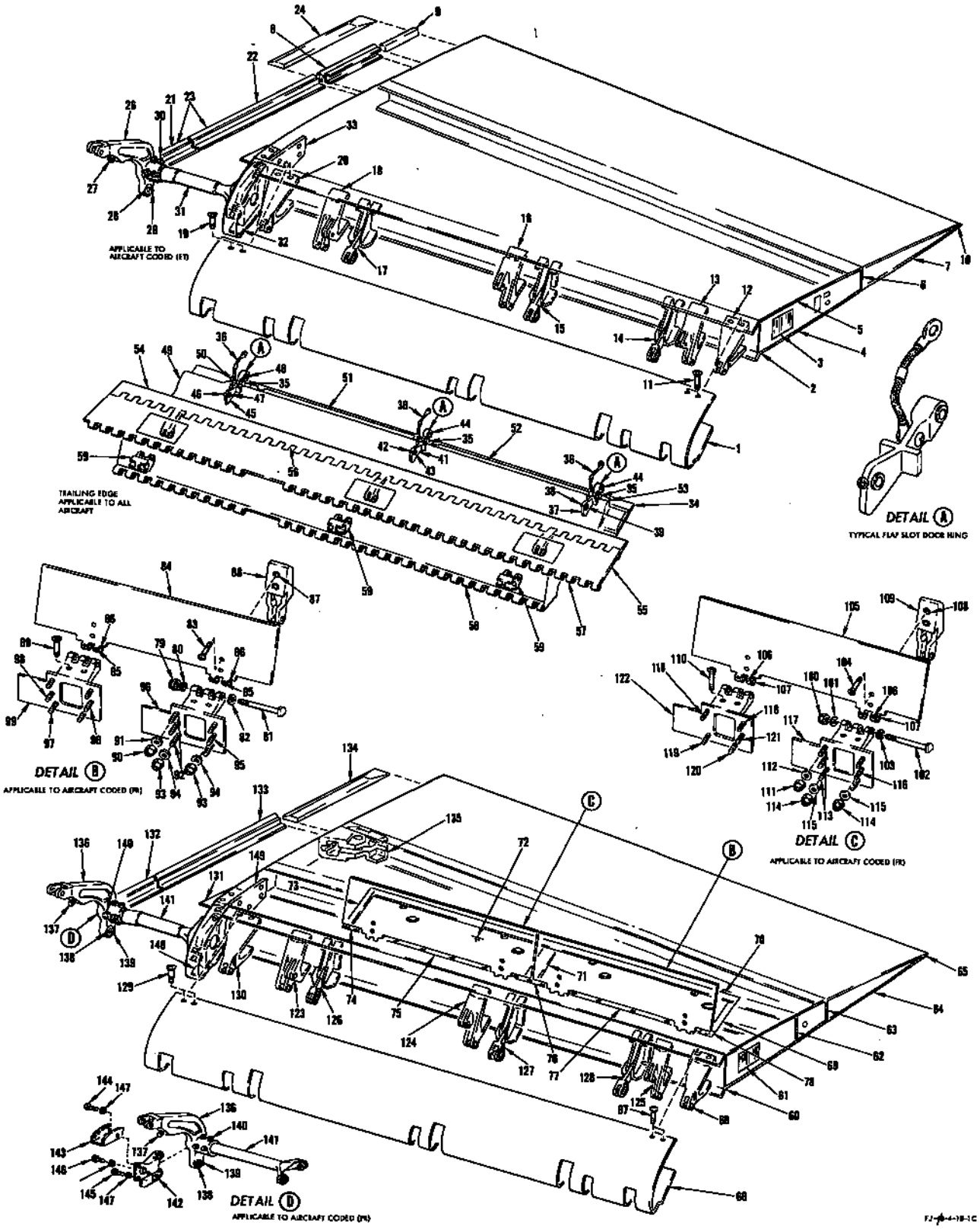

FIGURE 21 - TRAILING EDGE, SPOILERS AND FLAP FRAME ASSEMBLIES

TRAILING EDGE, SPOILERS AND FLAP FRAME ASSEMBLIES

FIGURE & INDEX NO.	PART NUMBER	1 2 3 4 5 6 7 NOMENCLATURE	UNITS PER ASSY.	USABLE ON CODE	S/C NO.
21	209-18090-1	TUBE AND HORN ASSEMBLY, Flap torque LH	1	ET	
	209-18090-2	TUBE AND HORN ASSEMBLY, Flap torque RH	1	ET	
-26	209-14307-11	. FITTING ASSEMBLY, Inboard wing horn flap torque tube LH	1	ET	
	209-14307-12	. FITTING ASSEMBLY, Inboard wing horn flap torque tube RH	1	ET	
-27	209-14324	. . BOLT, Flap stop adjustable	1	ET	
	1N7-6A	. . NUT, Check (NA) (89372)	1	ET	
	RD208SB-9L	. . INSERT (ROSN) (83324)	1	ET	
	RL38SB-9	. . RING (ROSN) (83324)	1	ET	
-28	NAS50-156	. . RING	1	ET	
	A-6	. . BEARING (SHA) (77896)	1	ET	
-29	NAS516-1	. . FITTING, Lubricator	1	ET	
-30	AN364-524	. NUT	4	ET	
	AN386-4-22A	. PIN	4	ET	
	AN975-5	. WASHER	4	ET	
-31	209-18103-3	. TUBE, Flap torque LH	1	ET	
	209-18103-4	. TUBE, Flap torque RH	1	ET	
	209-18105-1	NOSE ASSEMBLY, Flap torque tube attaching LH	1	ET	
	209-18105-2	NOSE ASSEMBLY, Flap torque tube attaching RH	1	ET	
-32	209-18105-5	. SKIN, Flap torque tube attaching nose assembly LH (commercially pure titanium)	1	ET	
	209-18105-6	. SKIN, Flap torque tube attaching nose assembly RH (commercially pure titanium)	1	ET	
-33	209-18104-3	. FITTING, Torque tube to flap attaching LH	1	ET	
	209-18104-4	. FITTING, Torque tube to flap attaching RH	1	ET	
-34	209-18501-1	DOOR ASSEMBLY, Flap slot LH	1	ET	
	209-18501-101	DOOR ASSEMBLY, Flap slot LH	1	FR	
	209-18501-2	DOOR ASSEMBLY, Flap slot RH	1	ET	
	209-18501-102	DOOR ASSEMBLY, Flap slot RH	1	FR	
-35	AN520-10R8	. SCREW	3		
	2W18-10M	. WASHER, Flat (NA) (89372)	9		
	AN364-1032	. NUT	3		
-36	MS25083-1BC3	. JUMPER ASSEMBLY	3		
-37	209-18511-41	. HINGE ASSEMBLY, Flap slot door	1		
-38	NAS516-1	. . FITTING, Lubricator	1		
-39	HSBG-3	. . BEARING (HLF) (97613)	1		
-40	4B20S6-005	. . BUSHING, Press fit flanged (NA) (89372)	2		
-41	209-18511-31	. HINGE ASSEMBLY, Flap slot door	1		
-42	NAS516-1	. . FITTING, Lubricator	1		
-43	HSBG-3	. . BEARING (HLF) (97613)	1		
-44	4B20S6-005	. . BUSHING, Press fit flanged (NA) (89372)	2		
-45	209-18511-21	. HINGE ASSEMBLY, Flap slot door	1		
-46	NAS516-1	. . FITTING, Lubricator	1		
-47	HSBG-3	. . BEARING (HLF) (97613)	1		
-48	4B20S6-005	. . BUSHING, Press fit flanged (NA) (89372)	2		
-49	209-18521-1	. SKIN ASSEMBLY, Upper flap slot door LH	1	ET	
	209-18521-2	. SKIN ASSEMBLY, Upper flap slot door RH	1	ET	
	209-18521-2	. SKIN ASSEMBLY, Upper flap slot door LH & RH	1	FR	
	209-18520-1	. SKIN ASSEMBLY, Lower flap slot door LH	1	ET	
	209-18520-2	. SKIN ASSEMBLY, Lower flap slot door RH	1	ET	
	209-18520-2	. SKIN ASSEMBLY, Lower flap slot door LH & RH	1	FR	
-50	209-18525-1	. SEAL, Flap slot door assembly LH	1		
-51	209-18525-3	. SEAL, Flap slot door assembly LH	1	ET	
	209-18525-4	. SEAL, Flap slot door RH	1	ET	
	209-18525-9	. SEAL, Flap slot door LH	1	FR	
	209-18525-10	. SEAL, Flap slot door RH	1	FR	
-52	209-18525-5	. SEAL, Flap slot door LH	1	ET	
	209-18525-6	. SEAL, Flap slot door RH	1	ET	
	209-18525-6	. SEAL, Flap slot door LH & RH	1	FR	
-53	209-18525-7	. SEAL, Flap slot door	1		
	209-18524	. FILLER, Outboard flap slot door	1		
	209-18523	. FILLER, Inboard flap slot door	1		
-54	209-14803-1	DEFLECTOR ASSEMBLY, Hinge strip inboard wing trailing edge LH	1		
	209-14803-2	DEFLECTOR ASSEMBLY, Hinge strip inboard wing trailing edge RH	1		
	209-14803-7	. DEFLECTOR, Hinge strip inboard wing trailing edge deflector assembly LH (supersedes 209-14803-3 for future procurement)	1		
	209-14803-8	. DEFLECTOR, Hinge strip inboard wing trailing edge deflector assembly RH (supersedes 209-14803-4 for future procurement)	1		
	209-14804-3	. BUSHING, Deflector hinge strip inboard wing trailing edge	2		
-55	209-14450-1	DOOR ASSEMBLY, Inboard wing trailing edge flap LH	1	ET	
	209-14450-101	DOOR ASSEMBLY, Inboard wing trailing edge flap LH	1	FR	
	209-14450-2	DOOR ASSEMBLY, Inboard wing trailing edge flap RH	1	ET	
	209-14450-102	DOOR ASSEMBLY, Inboard wing trailing edge flap RH	1	FR	
-56	209-14803-11	. DEFLECTOR ASSEMBLY, Hinge strip inboard wing trailing edge LH	1	ET	
	209-14803-21	. DEFLECTOR ASSEMBLY, Hinge strip inboard wing trailing edge LH	1	FR	
	209-14803-12	. DEFLECTOR ASSEMBLY, Hinge strip inboard wing trailing edge RH	1	ET	
	209-14803-22	. DEFLECTOR ASSEMBLY, Hinge strip inboard wing trailing edge RH	1	FR	
	209-14803-5	. . DEFLECTOR, Hinge strip inboard wing trailing edge deflector assembly LH	1	ET	
	209-14803-9	. . DEFLECTOR, Hinge strip inboard wing trailing edge deflector assembly LH	1	FR	
	209-14803-6	. . DEFLECTOR, Hinge strip inboard wing trailing edge deflector assembly RH	1	ET	

TRAILING EDGE, SPOILERS AND FLAP FRAME ASSEMBLIES

FIGURE & INDEX NO.	PART NUMBER	1 2 3 4 5 6 7 NOMENCLATURE	UNITS PER ASSY.	USABLE ON CODE	S/C NO.
21	209-14803-10	. . DEFLECTOR, Hinge strip inboard wing trailing edge deflector assy RH-	1	FR	
	209-14804-3	. . BUSHING, Deflector hinge strip inboard wing trailing edge (used on 209-14803-11 and 209-14803-12)	1	ET	
	209-14804-3	. . BUSHING, Deflector hinge strip inboard wing trailing edge	1	FR	
-57	209-14461-1	. JOINT, Inboard wing trailing edge flap door upper LH	1		
	209-14461-2	. JOINT, Inboard wing trailing edge flap door upper RH	1		
-58	209-14463-1	. JOINT, Inboard wing trailing edge flap door lower LH	1		
	209-14463-2	. JOINT, Inboard wing trailing edge flap door lower RH	1		
-59	209-18526-3	. FITTING, Flap slot door actuator hinge support	3		
	209-918004-1	FLAP ASSEMBLY, Complete LH (rework drawing) (see figures 9 and 10 for additional breakdown)	1	HJ	
	209-18004-11	*1 SPOILER FLAP ASSEMBLY LH (see figures 9 and 10 for additional breakdown) -	1	FL	
	209-918004-2	FLAP ASSEMBLY, Complete RH (rework drawing) (see figures 9 and 10 for additional breakdown)	1	HJ	
	209-18004-12	*1 SPOILER FLAP ASSEMBLY RH (see figures 9 and 10 for additional breakdown) -	1	FL	
-60	209-18020-51	. SPAR, Flap forward assembly of LH (supersedes 209-18020-1 for future procurement)	1	FR	
	209-18020-52	. SPAR, Flap forward assembly of RH (supersedes 209-18020-2 for future procurement)	1	FR	
-61	5P48	. PLATE, Navy identification and modification (NA) (89372)	1	FR	
-62	209-18011-1	. SPAR, Flap intermediate LH assembly of (see figure 10 for additional breakdown)	1	FR	
	209-18011-2	. SPAR, Flap intermediate RH assembly of (see figure 10 for additional breakdown)	1	FR	
-63	209-18021-1	. SPAR ASSEMBLY, Flap rear LH	1	FR	
	209-18021-2	. SPAR ASSEMBLY, Flap rear RH	1	FR	
-64	209-18005-201	. TRAILING EDGE ASSEMBLY, Flap LH	1	FR	
	209-18005-202	. TRAILING EDGE ASSEMBLY, Flap RH	1	FR	
	209-18005-53	. . PANEL ASSEMBLY, Flap trailing edge honeycomb flap pattern LH- (make from 209-18099-21)	1	FR	
	209-18005-54	. . PANEL ASSEMBLY, Flap trailing edge honeycomb flap pattern RH- (make from 209-18099-22)	1	FR	
-65	209-18005-25	. . STRAND, Glass fiber flap trailing edge assembly	3	FR	
-66	209-918004-15	. SKIN, Complete flap assembly LH (commercially pure titanium)	1	HJ	
	209-18004-5	. SKIN, Spoiler flap assembly LH (commercially pure titanium)	1	FL	
	209-918004-16	. SKIN, Complete flap assembly RH (commercially pure titanium)	1	HJ	
	209-18004-6	. SKIN, Spoiler flap assembly RH (commercially pure titanium)	1	FL	
-67	AN509-10R13	. SCREW	2	FR	
	2W18-10M	. WASHER, Flat (NA) (89372)	2	FR	
	AN365-1032	. NUT	2	FR	
-68	209-18007-7	. HINGE, Inboard and outboard flap	1	FR	
-69	209-918004-43	. STRIP, Complete flap assembly (synthetic rubber)	1	HJ	
	209-18004-29	. STRIP, Spoiler flap assembly (synthetic rubber)	1	FL	
	209-18153-3	. SPACER, Flap spoiler support upper	1	FR	
-70	209-918004-41	. STRIP, Complete flap assembly (synthetic rubber)	1	HJ	
	209-18004-25	. STRIP, Spoiler flap assembly (synthetic rubber)	1	FL	
-71	209-918004-77	. STRIP, Complete flap assembly (synthetic rubber)	1	HJ	
	209-18004-29	. STRIP, Spoiler flap assembly (synthetic rubber)	1	FL	
	209-18153-5	. SPACER. Flap spoiler support upper	1	FR	
-72	209-18028-3	. REINFORCEMENT, Flap LH	1	FR	
	209-18028-4	. REINFORCEMENT, Flap RH	1	FR	
-73	209-918004-79	. STRIP, Complete flap assembly	1	HJ	
	209-18004-33	. STRIP, Spoiler flap assembly (synthetic rubber)	1	FL	
	209-918004-11	. DOOR SUBASSEMBLY, Complete flap assembly LH (see figure 9 for additional breakdown)	1	HJ	
	209-18004-21	. DOOR SUBASSEMBLY, Spoiler flap assembly LH (see figure 9 for additional breakdown)	1	FL	
	209-918004-12	. DOOR SUBASSEMBLY, Flap assembly complete RH (see figure 9 for additional breakdown)	1	HJ	
	209-18004-22	. DOOR SUBASSEMBLY, Spoiler flap assembly RH (see figure 9 for addition breakdown)	1	FL	
-74	209-18128-3	. . SPACER, Flap spoiler upper access door	1	FR	
-75	209-18128-9	. . SPACER, Flap spoiler upper access door	1	FR	
-76	209-18128-7	. . SPACER, Flap spoiler upper access door	1	FR	
-77	209-18128-9	. . SPACER, Flap spoiler upper access door	1	FR	
-78	209-18128-5	. . SPACER, Flap spoiler upper access door	1	FR	
-79	AN364-1032	. NUT	2	FR	
-80	2W18-10M	. WASHER, Flat (NA) (89372)	2	FR	
-81	209-18121	. PIN, Flap spoiler hinge (magnetic inspected)	2	FR	
-82	209-918004-87	. WASHER, Flap assembly complete (make from 2W18-416M (NA) (89372)) -	2	HJ	
	209-18004-53	. WASHER, Spoiler flap assembly (make from 2W18-416M (NA) (89372))	2	FL	
	209-18127	. SPOILER, Flap assembly of (outboard spoiler)	1	FR	
-83	NAS335CPA7	. . BOLT (outboard spoiler)	4	FR	
-84	209-18022	. . SPOILER PLATE, Flap assembly of (outboard spoiler)	1	FR	
-85	NAS516-1	. . . FITTING, Lubricator (outboard spoiler)	4	FR	
-86	209-18124	. . . BUSHING, Flap spoiler (outboard spoiler)	8	FR	
-87	3591-5CNx-15/32	. . INSERT, Heli-coil (AF) (91767) (outboard spoiler)	4	FR	
-88	209-18038-3	. . FITTING, Spoiler actuator (interchangeable with and superseded by 209-18167-3 for future procurement)	2	FR	
	209-18167-3	. . FITTING, Flap spoiler actuator (interchangeable with and supersedes - 209-18038-3 for future procurement)	2	FR	
-89	7S29-10-7A	. SCREW, Shear 100° flush hi-shear head close tolerance (NA) (89372)	4	HJ	
	7S29-10-7	. SCREW, Shear 100° flush hi-shear head close tolerance (NA) (89372)	4	FL	

T RAILING EDGE, SPOILERS AND FLAP FRAME ASSEMBLIES

FIGURE & INDEX NO.	PART NUMBER	1 2 3 4 5 6 7 NOMENCLATURE	UNITS PER ASSY.	USABLE ON CODE	S/C NO.
21	2W18-10M	. WASHER, Flat (NA) (89372)	4	FR	
	AN364-1032	. NUT	4	FR	
-90	AN364-428	. NUT	4	FR	
-91	2W18-416	. WASHER, Flat (NA) (89372) (1 under each bolthead)	8	FR	
-92	AN4-6A	. BOLT (head on aft side)	4	FR	
-93	AN365-1032	. NUT	2	FR	
-94	2W18-10	. WASHER, Flat (NA) (89372) (1 under each bolthead)	4	FR	
-95	AN3-6A	. BOLT (head on aft side)	2	FR	
-96	209-18166-9	FITTING, Flap spoiler hinge forward (outboard spoiler outboard hinge) (supersedes and is interchangeable with 209-18107-15)	1	FR	
-97	AN4-7A	. BOLT (head on aft side)	4	FR	
	2W18-416	. WASHER, Flat (NA) (89372)	4	FR	
	NAS463Y-DD416	. SHIM	4	FR	
	F2000-428	. NUT, Anchor one lug fixed 550°F (KNM) (75237)	4	HJ	
	F2000-10-428	. NUT, Anchor one lug fixed 550°F (KNM) (75237)	1	FL	
-98	AN3-6A	. BOLT (head on aft side)	2	FR	
	2W18-10	. WASHER, Flat (NA) (89372)	2	FR	
	F5000-1032	. NUT, Anchor one lug floating 550°F (KNM) (75237)	2	HJ	
	F5000-10-1032	. NUT, Anchor one lug floating 550°F (KNM) (75237)	2	FL	
-99	209-18166-7	FITTING, Flap spoiler hinge forward (outboard spoiler inboard hinge) (supersedes and is interchangeable with 209-18107-15)	1	FR	
-100	AN364-1032	. NUT	2	FR	
-101	2W18-10M	. WASHER, Flat (NA) (89372)	2	FR	
-102	209-18121	. PIN, Flap spoiler hinge (magnetic inspected)	2	FR	
-103	209-918004-87	. WASHER, Flap assembly complete (make from 2W18-416M (NA) (89372))	2	HJ	
	209-18004-53	. WASHER, Spoiler flap assembly (make from 2W18-416M (NA) (89372))	2	FL	
	209-18127	. SPOILER, Flap assembly of (inboard spoiler)	1	FR	
-104	NAS335CPA7	. . BOLT (inboard spoiler)	4	FR	
-105	209-18022	. . SPOILER PLATE, Flap assembly of (inboard spoiler)	1	FR	
-106	NAS516-1	. . . FITTING, Lubricator (inboard spoiler)	4	FR	
-107	209-18124	. . . BUSHING, Flap spoiler (inboard spoiler)	8	FR	
-108	3591-5CNx-15/32	. . INSERT, Heli-coil (AF) (91767) (inboard spoiler)	4	FR	
-109	209-18038-3	. . FITTING, Spoiler actuator (interchangeable with and superseded by 209-18167-3 for future procurement)	2	FR	
	209-18167-3	. . FITTING, Flap spoiler actuator (interchangeable with and supersedes 209-18038-3 for future procurement)	2	FR	
-110	7S29-10-7A	. SCREW, Shear 100° flush hi-shear head close tolerance (NA) (89372)	4	HJ	
	7S29-10-7	. SCREW, Shear 100° flush hi-shear head close tolerance (NA) (89372)	4	FL	
	2W18-10M	. WASHER, Flat (NA) (89372)	4	FR	
	AN364-1032	. NUT	4	FR	
-111	AN365-428	. NUT	4	FR	
-112	2W18-416	. WASHER, Flat (NA) (89372) (1 under each bolthead)	8	FR	
-113	AN4-7A	. BOLT	4	FR	
-114	AN365-1032	. NUT	2	FR	
-115	2W18-10	. WASHER, Flat (NA) (89372) (1 under each bolthead)	4	FR	
-116	AN3-6A	. BOLT	2	FR	
-117	209-18166-5	FITTING, Flap spoiler hinge forward (inboard spoiler outboard hinge) (supersedes and is interchangeable with 209-18107-13)	1	FR	
-118	AN4-10A	. BOLT	2	FR	
	2W18-416M	. WASHER, Flat (NA) (89372)	4	FR	
	AN365-428	. NUT	2	FR	
-119	NAS464-P4A9	. BOLT	1	FR	
	2W18-416M	. WASHER, Flat (NA) (89372)	2	FR	
	AN364-428	. BOLT	1	FR	
-120	NAS464-P4A9	. BOLT	1	FR	
	2W18-416M	. WASHER, Flat (NA) (89372)	2	FR	
	AN364-428	. NUT	1	FR	
-121	AN3-7A	. BOLT	1	FR	
	2W18-10M	. WASHER, Flat (NA) (89372)	2	FR	
	AN365-1032	. NUT	1	FR	
-122	209-18166-3	FITTING, Flap spoiler hinge forward LH (inboard spoiler inboard hinge) (supersedes and is interchangeable with 209-18107-11)	1	FR	
	209-18166-4	FITTING, Flap spoiler hinge forward RH (inboard spoiler inboard hinge) (supersedes and is interchangeable with 209-18107-12)	1	FR	
-123	209-18050-15	*2 . FITTING, Flap slot door hinge support RH (flap station 42.269)	1	FR	
	209-18050-16	*2 . FITTING, Flap slot door hinge support LH (flap station 42.269)	1	FR	
-124	209-18050-17	*3 . FITTING, Flap slot door hinge support RH (flap station 61.142)	1	FR	
	209-18050-18	*3 . FITTING, Flap slot door hinge support LH (flap station 61.142)	1	FR	
-125	209-18050-19	*4 . FITTING, Flap slot door hinge support RH (flap station 81.764)	1	FR	
	209-18050-20	*4 . FITTING, Flap slot door hinge support LH (flap station 81.764)	1	FR	
-126	209-18093-3	. CLEVIS, Flap shroud deflector hinge support (flap station 45)	1	FR	
-127	209-18093-5	. CLEVIS, Flap shroud deflector hinge support (flap station 64)	1	FR	
-128	209-18093-7	. CLEVIS, Flap shroud deflector hinge support (flap station 79)	1	FR	
-129	AN509-10R13	. SCREW	2	FR	
	2W18-10M	. WASHER, Flat (NA) (89372)	2	FR	
	AN365-1032	. NUT	2	FR	
-130	209-18162-3	. HINGE, Inboard flap LH (supersedes 209-18123-3 for future procurement)	1	FR	
	209-18162-4	. HINGE, Inboard flap RH (supersedes 209-18123-4 for future procurement)	1	FR	
-131	209-18115-3	. EXTENSION, Inbd flap lower skin LH (polyster glass fiber molding compound)	1	FR	
	209-18115-4	. EXTENSION, Inbd flap lower skin RH (polyster glass fiber molding compound)	1	FR	
	ATTACHING PARTS				
	AN509-10R12	. SCREW	2	FR	

TRAILING EDGE, SPOILERS AND FLAP FRAME ASSEMBLIES

FIGURE & INDEX NO.	PART NUMBER	1 2 3 4 5 6 7 NOMENCLATURE	UNITS PER ASSY.	USABLE ON CODE	S/C NO.
21	2W18-10	. WASHER, Flat (NA) (89372)	2	FR	
	AN365-1032	. NUT	2	FR	
	---*---				
-132	209-18118-21	. SEAL ASSEMBLY, Flap to fuselage forward LH	1	FR	
	209-18118-22	. SEAL ASSEMBLY, Flap to fuselage forward RH	1	FR	
	ATTACHING PARTS				
	AN509-10R11	. SCREW	1	FR	
	AN509-10R12	. SCREW	1	FR	
	2W18-10	. WASHER, Flat (NA) (89372)	2	FR	
	AN365-1032	. NUT	2	FR	
	---*---				
-133	209-18117-11	. SEAL ASSEMBLY, Flap to fuselage aft LH	1	FR	
	209-18117-12	. SEAL ASSEMBLY, Flap to fuselage aft RH	1	FR	
-134	209-18119-1	. SEAL, Flap to fuselage LH	1	FR	
	209-18119-2	. SEAL, Flap to fuselage RH	1	FR	
-135	209-18106-3	. FITTING, Flap spoiler actuator support LH	1	FR	
	209-18106-4	. FITTING, Flap spoiler actuator support RH	1	FR	
	209-523319-1	TUBE ASSEMBLY, Complete flap torque LH (interchangeable with and superseded by 209-18168-1 for future procurement)	1	FR	
	209-18168-1	TUBE ASSEMBLY, Flap torque LH (interchangeable with and supersedes 209-523319-1 for future procurement)	1	FR	
	209-523319-2	TUBE ASSEMBLY, Complete flap torque RH (interchangeable with and superseded by 209-18168-2 for future procurement)	1	FR	
	209-18168-2	TUBE ASSEMBLY, Flap torque RH (interchangeable with and supersedes 209-523319-2 for future procurement)	1	FR	
-136	209-523322-11	. HORN ASSEMBLY, Flap control LH (interchangeable with and superseded by 209-14307-21 for future procurement)	1	FR	
	209-14307-21	. FITTING ASSEMBLY, Inboard wing horn flap torque tube LH (interchangeable with and supersedes 209-523322-11 for future procurement)	1	FR	
	209-523322-12	. HORN ASSEMBLY, Flap control RH (interchangeable with and superseded by 209-14307-22 for future procurement)	1	FR	
	209-14307-22	. FITTING ASSEMBLY, Inboard wing horn flap torque tube RH (interchangeable with and supersedes 209-523322-12 for future procurement)	1	FR	
-137	209-14324	. . BOLT, Flap stop adjustable	1	FR	
	1N7-6A	. . NUT, Check (NA) (89372)	1	FR	
	RD208SB-9L	. . INSERT (ROSN) (83324)	1	FR	
	RL38SB-9	. . RING (ROSN) (83324)	1	FR	
-138	NAS50-156	. . RING	1	FR	
	A-6	. . BEARING (SHA) (77896)	1	FR	
-139	NAS516-1	. . FITTING, Lubricator	1	FR	
	RL38SB-8	. . RING (ROSN) (83324)	2	NJ	
	RD206SB-6.5L	. . INSERT (ROSN) (83324)	2	NJ	
	1191-4CNx-3/8	. . INSERT, Heli-coil (AF) (91767)	1	NJ	
-140	AN364-624	. NUT	4	FR	
	2W18-616	. WASHER, Flat (NA) (89372)	4	FR	
	7S29-616-11	. SCREW, Shear 100° flush hi-shear head close tolerance (NA) (89372)	4	FR	
-141	209-523323-1	. TUBE, Flap control torque LH (interchangeable with and superseded by 209-18151-3 for future procurement)	1	FR	
	209-18151-3	. TUBE, Flap control torque LH (interchangeable with and supersedes 209-523323-1 for future procurement)	1	FR	
	209-523323-2	. TUBE, Flap control torque RH (interchangeable with and superseded by 209-18151-4 for future procurement)	1	FR	
	209-18151-4	. TUBE, Flap control torque RH (interchangeable with and supersedes 209-523323-2 for future procurement)	1	FR	
-142	209-523359-1	. SUPPORT, Spoiler control bellcrank flap-horn LH (supersedes and is interchangeable with 209-523321-1)	1	FR	
	209-523359-2	. SUPPORT, Spoiler control bellcrank flaphorn RH (supersedes and is interchangeable with 209-523321-2)	1	FR	
-143	209-54744	. SUPPORT, Intermediate flap position cam (used on RH assembly only)	1	FR	
-144	AN174-5A	. BOLT (used on LH assembly only)	1	FR	
	AN174-7A	. BOLT (used on RH assembly only)	1	FR	
-145	AN174-5A	. BOLT	1	FR	
-146	AN174-7A	. BOLT	1	FR	
-147	2W18-416M	. WASHER, Flat (NA) (89372)	3	FR	
	209-18105-1	NOSE ASSEMBLY, Flap torque tube attaching LH	1	FR	
	209-18105-2	NOSE ASSEMBLY, Flap torque tube attaching RH	1	FR	
-148	209-18105-5	. SKIN, Flap torque tube attaching nose assembly LH (commercially pure titanium)	1	FR	
	209-18105-6	. SKIN, Flap torque tube attaching nose assembly RH (commercially pure titanium)	1	FR	
-149	209-18104-3	. FITTING, Torque tube to flap attaching LH	1	FR	
	209-18104-4	. FITTING, Torque tube to flap attaching RH	1	FR	

NOTE: *1 Consult drawing no. 209-18006 to complete definition of spoiler flap assembly
*2 209-18050-15 & 209-18050-16 supersede 209-18050-13 and 209-18050-14 together with 209-18169-9 and 209-18169-13 for future procurement
*3 209-18050-17 and 209-18050-18 supersede 209-18050-11 and 209-18050-12 together with 209-18169-3 and 209-18169-5 for future procurement
*4 209-18050-19 and 209-18050-20 supersede 209-18050-9 and 209-18050-10 together with 209-18169-3 and 209-18169-5 for future procurement

ALL DATA DELETED FROM PAGE 113

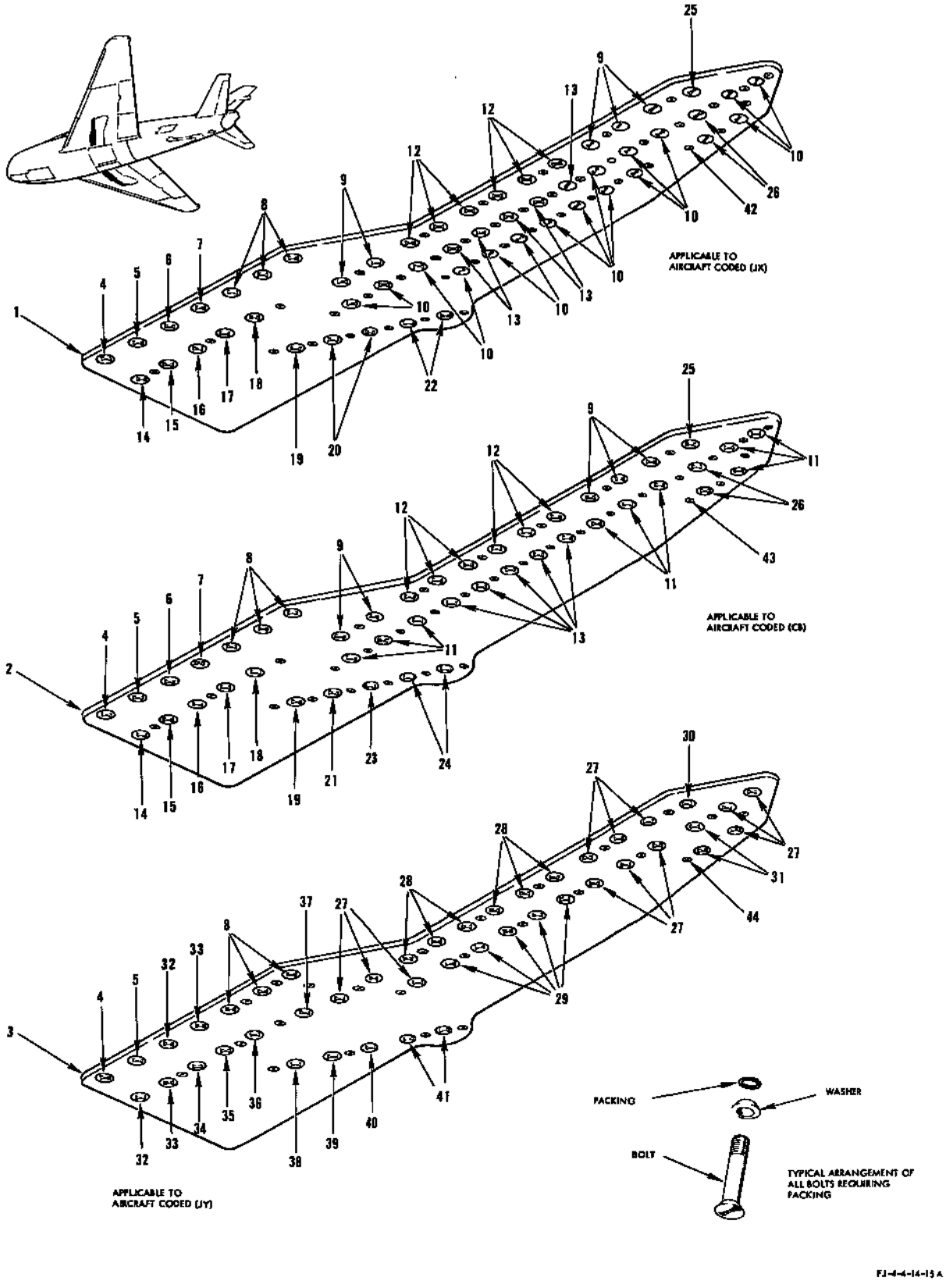

FIGURE 22 - LOWER LANDING GEAR TRUNNION SKIN EXTERNAL DOUBLER - APPLICABLE TO AIRCRAFT CODED (KA)

LOWER LANDING GEAR TRUNNION SKIN EXTERNAL DOUBLER - APPLICABLE TO AIRCRAFT CODED (KA)

FIGURE & INDEX NO.	PART NUMBER	1 2 3 4 5 6 7 NOMENCLATURE	UNITS PER ASSY.	USABLE ON CODE	S/C NO.
22-1	209-14028-3	PLATE, Inboard wing lower trunnion external skin doubler LH	1	JX	
	209-14026-4	PLATE, Inboard wing lower trunnion external skin doubler RH	1	JX	
-2	209-14027-3	PLATE, Inboard wing lower trunnion external skin doubler LH	1	CB	
	209-14027-4	PLATE, Inboard wing lower trunnion external skin doubler RH	1	CB	
-3	209-14008-3	PLATE, Inboard wing lower trunnion external skin doubler LH	1	JY	
	209-14008-4	PLATE, Inboard wing lower trunnion external skin doubler RH	1	JY	
		ATTACHING PARTS			
-4	HT6M-26	BOLT (HIS) (73197)	1	KA	
	209-144150-9	WASHER, Conical inboard wing lower skin	1	JZ	
-5	HT6M-24	BOLT (HIS) (73197)	1	KA	
	209-144150-9	WASHER, Conical inboard wing lower skin	1	JZ	
-6	HT6M-27	BOLT (HIS) (73197)	1	JZ	
	209-144150-9	WASHER, Conical inboard wing lower skin	1	JZ	
-7	HT6M-25	BOLT (HIS) (73197)	1	JZ	
	209-144150-9	WASHER, Conical inboard wing lower skin	1	JZ	
-8	HT6M-17	BOLT (HIS) (73197)	3	KA	
	209-144150-9	WASHER, Conical inboard wing lower skin	3	JZ	
-9	HT7M-18	BOLT (HIS) (73197)	5	JZ	
	209-144150-7	WASHER, Conical inboard wing lower skin	5	JZ	
-10	HT7M-18	BOLT (HIS) (73197)	16	JX	
	209-144150-7	WASHER, Conical inboard wing lower skin	16	JX	
	MS29513-14	PACKING	16	JX	
-11	HT7M-18	BOLT (HIS) (73197)	9	CB	
	209-144150-7	WASHER, Conical inboard wing lower skin	9	CB	
	MS29513-14	PACKING	9	CB	
-12	HT7M-35	BOLT (HIS) (73197)	6	JZ	
	209-144150-7	WASHER, Conical inboard wing lower skin	6	JZ	
-13	HT7M-23	BOLT (HIS) (73197)	5	JZ	
	209-144150-7	WASHER, Conical inboard wing lower skin	5	JZ	
	MS29513-14	PACKING	5	JZ	
-14	HT6M-27	BOLT (HIS) (73197)	1	JZ	
	209-144150-9	WASHER, Conical inboard wing lower skin	1	JZ	
-15	HT6M-25	BOLT (HIS) (73197)	1	JZ	
	209-144150-9	WASHER, Conical inboard wing lower skin	1	JZ	
-16	HT6M-23	BOLT (HIS) (73197)	1	JZ	
	209-144150-9	WASHER, Conical inboard wing lower skin	1	JZ	
-17	HT6M-21	BOLT (HIS) (73197)	1	JZ	
	209-144150-9	WASHER, Conical inboard wing lower skin	1	JZ	
-18	HT6M-19	BOLT (HIS) (73197)	1	JZ	
	209-144150-9	WASHER, Conical inboard wing lower skin	1	JZ	
-19	HT5M-23	BOLT (HIS) (73197)	1	JZ	
	209-144150-5	WASHER, Conical inboard wing lower skin	1	JZ	
	MS29513-11	PACKING	1	JZ	
-20	HT5M-21	BOLT (HIS) (73197)	2	JX	
	209-144150-5	WASHER, Conical inboard wing lower skin	2	JX	
	MS29513-11	PACKING	2	JX	
-21	HT5M-21	BOLT (HIS) (73197)	1	CB	
	209-144150-5	WASHER, Conical inboard wing lower skin	1	CB	
	MS29513-11	PACKING	1	CB	
-22	HT5M-19	BOLT (HIS) (73197)	2	JX	
	209-144150-5	WASHER, Conical inboard wing lower skin	2	JX	
	MS29513-11	PACKING	2	JX	
-23	HT4M-21	BOLT (HIS) (73197)	1	CB	
	209-144150-3	WASHER, Conical inboard wing lower skin	1	CB	
	MS29513-10	PACKING	1	CB	
-24	HT4M-19	BOLT (HIS) (73197)	2	CB	
	209-144150-3	WASHER, Conical inboard wing lower skin	2	CB	
	MS29513-10	PACKING	2	CB	
-25	HT7M-24	BOLT (HIS) (73197)	1	JZ	
	209-144150-7	WASHER, Conical inboard wing lower skin	1	JZ	
-26	HT7M-25	BOLT (HIS) (73197)	2	JZ	
	209-144150-7	WASHER, Conical inboard wing lower skin	2	JZ	
	MS29513-14	PACKING	2	JZ	
-27	HT7M-18	BOLT (HIS) (73197)	12	JY	
-28	HT7M-35	BOLT (HIS) (73197)	6	JY	
-29	HT7M-23	BOLT (HIS) (73197)	5	JY	
-30	HT7M-24	BOLT (HIS) (73197)	1	JY	
-31	HT7M-25	BOLT (HIS) (73197)	2	JY	
-32	HT6M-27	BOLT (HIS) (73197)	2	JY	
-33	HT6M-25	BOLT (HIS) (73197)	2	JY	
-34	HT6M-23	BOLT (HIS) (73197)	1	JY	
-35	HT6M-21	BOLT (HIS) (73197)	1	JY	
-36	HT6M-19	BOLT (HIS) (73197)	1	JY	
-37	HT7M-22	BOLT (HIS) (73197)	1	JY	
-38	HT5M-23	BOLT (HIS) (73197)	1	JY	
-39	HT5M-21	BOLT (HIS) (73197)	1	JY	
-40	HT4M-21	BOLT (HIS) (73197)	1	JY	
-41	HT4M-19	BOLT (HIS) (73197)	2	JY	
		---*---			
-42	191-14884	SCREW, Sealant injection hole plug	41	JX	
-43	191-14884	SCREW, Sealant injection hole plug	33	CB	
-44	191-14884	SCREW, Sealant injection hole plug	24	JY	

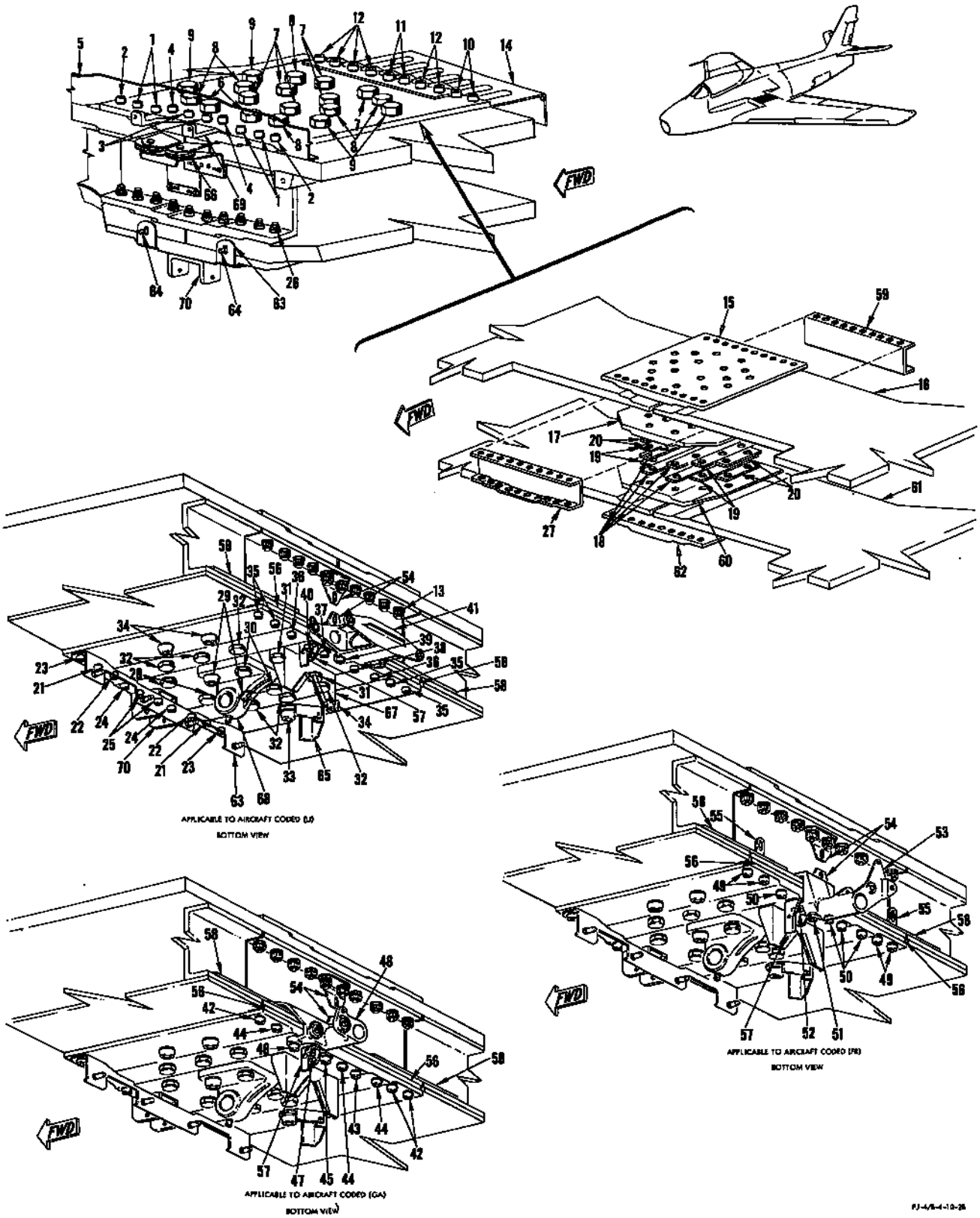

FIGURE 23 - SPLICE PLATES

MAIN LANDING GEAR TRUNNION

FIGURE & INDEX NO.	PART NUMBER	1 2 3 4 5 6 7 NOMENCLATURE	UNITS PER ASSY.	USABLE ON CODE	S/C NO.
24-1	209-14318-11	FITTING ASSEMBLY, Inboard wing landing gear trunnion angle LH	1	A	
	209-14318-12	FITTING ASSEMBLY, Inboard wing landing gear trunnion angle RH	1	A	
-2	209-14318-51	FITTING ASSEMBLY, Inboard wing landing gear trunnion angle LH	1	CB	
	209-14318-52	FITTING ASSEMBLY, Inboard wing landing gear trunnion angle RH	1	CB	
-3	209-14318-101	FITTING ASSEMBLY, Inboard wing landing gear trunnion angle LH	1	BY	
	209-14318-102	FITTING ASSEMBLY, Inboard wing landing gear trunnion angle RH	1	BY	
-4	209-14139	. BUSHING, Inboard wing landing gear trunnion fitting assembly	2		
-5	4B19M-S20-108	. BUSHING, Press fit plain (NA) (89372) (superseded by 209-14321 for future procurement)	2		
	209-14321	. BUSHING, Inboard wing landing gear trunnion fitting assembly plain (supersedes 4B19M-S20-108 (NA) (89372) for future procurement)	2		
-6	4B19M-S22-212	. BUSHING, Press fit plain (NA) (89372)	1		
-7	1191-4CNx-3/8	. INSERT, Heli-coil (AF) (91767)	4		
-8	NAS464P6A20	BOLT	2		
	2W10-6	WASHER, Countersunk (NA) (89372)	2		
	2W18-616	WASHER, Flat (NA) (89372)	2		
	AN364-624	NUT	2		
-9	MS20007-20	BOLT	1		
	2W10-7	WASHER, Countersunk (NA) (89372)	1		
	2W18-716	WASHER, Flat (NA) (89372)	1		
	EB-070	NUT (EN) (72962)	1		
-10	MS20005-16	BOLT	4		
	2W10-5	WASHER, Countersunk (NA) (89372)	4		
	2W18-516	WASHER, Flat (NA) (89372)	8		
	EB-054	NUT (EN) (72962)	4		
-11	HT7M-20	SCREW (HIS) (73197)	1	A	
	NA2647-070	NUT, Anchor (EN) (72962)	1	A	
-12	HT7M-21	SCREW (HIS) (73197)	2	A	
	MS29513-14	PACKING	2	A	
	NA2648-070	NUT, Anchor (EN) (72962)	2	A	
-13	HT7M-14	SCREW (HIS) (73197)	9	A	
	NA2648-070	NUT, Anchor (EN) (72962)	9	A	
-14	HT7M-14	SCREW (HIS) (73197)	20	A	
	MS29513-14	PACKING	20	A	
	NA2647-070	NUT, Anchor (EN) (72962) (use at trunnion center wall)	1	A	
	NA2648-070	NUT, Anchor (EN) (72962)	19	A	
-15	HT7M-24	SCREW (HIS) (73197)	3	A	
	MS29513-14	PACKING	3	A	
	209-14318-9	SHIM, Trunnion angle installation LH	1	A	
	209-14318-10	SHIM, Trunnion angle installation RH	1	A	
	NA2648-070	NUT, Anchor (EN) (72962)	3	A	
-16	HT7M-43	SCREW (HIS) (73197)	3	A	
	209-14316-7	SHIM, Trunnion angle installation LH	1	A	
	209-14316-8	SHIM, Trunnion angle installation RH	1	A	
	NA2647-070	NUT, Anchor (EN) (72962)	3	A	
-17	HT7M-21	SCREW (HIS) (73197)	2	A	
	MS29513-14	PACKING	2	A	
	NA2648-070	NUT, Anchor (EN) (72962)	2	A	
-18	HT7M-20	SCREW (HIS) (73197)	1	A	
	NA2647-070	NUT, Anchor (EN) (72962)	1	A	
-19	HT7M-14	SCREW (HIS) (73197)	9	A	
	NA2647-070	NUT, Anchor (EN) (72962)	9	A	
-20	HT7M-14	SCREW (HIS) (73197)	22	A	
	MS29513-14	PACKING	22	A	
	NA2648-070	NUT, Anchor (EN) (72962)	22	A	
-21	HT7M-23	SCREW (HIS) (73197)	3	A	
	209-14316-15	SHIM, Trunnion angle installation LH	1	A	
	209-14316-16	SHIM, Trunnion angle installation RH	1	A	
	NA2648-070	NUT, Anchor (EN) (72962)	3	A	
-22	HT7M-14	SCREW (HIS) (73197)	1	A	
	MS29513-14	PACKING	1	A	
	NA2647-070	NUT, Anchor (EN) (72962)	1	A	
-23	NAS464-6-11	BOLT	3	A	
	2W18-616	WASHER, Flat (NA) (89372)	3	A	
	AN364-624	NUT	3	A	
-24	MS20005-10	BOLT	6	A	
	2W10-5	WASHER, Countersunk (NA) (89372)	6	A	
	2W18-516	WASHER, Flat (NA) (89372)	6	A	
	EB-054	NUT (EN) (72962)	6	A	
-25	HT7M-14	SCREW (HIS) (73197)	3	A	
	MS29513-14	PACKING	3	A	
	NA2648-070	NUT, Anchor (EN) (72962)	3	A	
-26	HT7M-22	SCREW (HIS) (73197)	1	A	
	NA2647-070	NUT, Anchor (EN) (72962)	1	A	
-27	HT7M-23	SCREW (HIS) (73197)	2	A	
	MS29513-14	PACKING	2	A	
	NA2648-070	NUT, Anchor (EN) (72962)	2	A	
-28	HT7M-14	SCREW (HIS) (73197)	3	A	
	MS29513-14	PACKING	3	A	
	NA2648-070	NUT, Anchor (EN) (72962)	3	A	
-29	HT7M-20	SCREW (HIS) (73197)	1	A	
	NA2647-070	NUT, Anchor (EN) (72962)	1	A	
-30	HT7M-23	SCREW (HIS) (73197)	2	A	
	MS29513-14	PACKING	2	A	

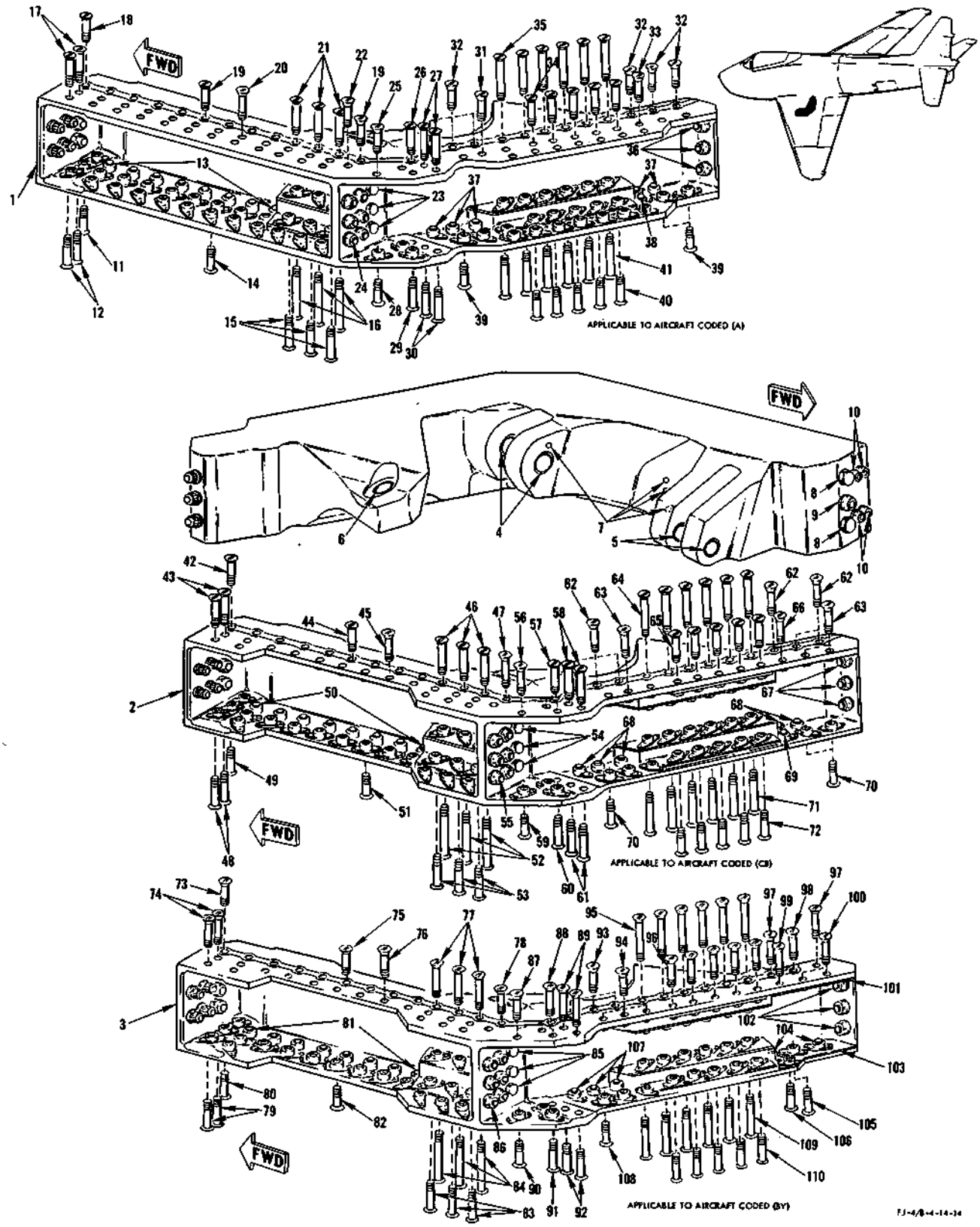

FIGURE 24 - MAIN LANDING GEAR TRUNNION

MAIN LANDING GEAR TRUNNION

FIGURE & INDEX NO.	PART NUMBER	1 2 3 4 5 6 7 NOMENCLATURE	UNITS PER ASSY.	USABLE ON CODE	S/C NO.
24	209-14316-10	SHIM, Trunnion angle installation RH	1	BY	
	NA2648-070	NUT, Anchor (EN) (72962)	3	BY	
-84	HT7M-43	SCREW (HIS) (73197)	3	BY	
	209-14316-7	SHIM, Trunnion angle installation LH	1	BY	
	209-14316-8	SHIM, Trunnion angle installation RH	1	BY	
	NA2648-070	NUT, Anchor (EN) (72962)	3	BY	
-85	NAS464-6-11	BOLT	3	BY	
	2W18-616	WASHER, Flat (NA) (89372)	6	BY	
	AN364-624	NUT	3	BY	
-86	MS20005-10	BOLT	6	BY	
	2W10-5	WASHER, Countersunk (NA) (89372)	6	BY	
	2W18-516	WASHER, Flat (NA) (89372)	6	BY	
	EB-054	NUT (EN) (72962)	6	BY	
-87	HT7M-14	SCREW (HIS) (73197)	3	BY	
	MS29513-14	PACKING	3	BY	
	NA2648-070	NUT (EN) (72962)	3	BY	
-88	HT7M-22	SCREW (HIS) (73197)	1	BY	
	NA2647-070	NUT, Anchor (EN) (72962)	1	BY	
-89	HT7M-23	SCREW (HIS) (73197)	2	BY	
	MS29513-14	PACKING	2	BY	
	NA2648-070	NUT, Anchor (EN) (72962)	2	BY	
-90	HT7M-14	SCREW (HIS) (73197)	3	BY	
	MS29513-14	PACKING	3	BY	
	NA2648-070	NUT, Anchor (EN) (72962)	3	BY	
-91	HT7M-20	SCREW (HIS) (73197)	1	BY	
	NA2647-070	NUT, Anchor (EN) (72962)	1	BY	
-92	HT7M-21	SCREW (HIS) (73197)	2	BY	
	MS29513-14	PACKING	2	BY	
	NA2648-070	NUT, Anchor (EN) (72962)	2	BY	
-93	HT7M-14	SCREW (HIS) (73197)	3	BY	
	NA2647-070	NUT, Anchor (EN) (72962)	3	BY	
-94	HT7M-14	SCREW (HIS) (73197)	3	BY	
	MS29513-14	PACKING	3	BY	
	NA2648-070	NUT, Anchor (EN) (72962)	3	BY	
-95	HT7M-31	SCREW (HIS) (73197)	6	BY	
	209-14316-11	SHIM, Trunnion angle installation LH	1	BY	
	209-14316-12	SHIM, Trunnion angle installation RH	1	BY	
	2648-070	NUT, Anchor (EN) (72962)	6	BY	
-96	HT7M-19	SCREW (HIS) (73197)	5	BY	
	MS29513-14	PACKING	5	BY	
	209-14316-13	SHIM, Trunnion angle installation LH	1	BY	
	209-14316-14	SHIM, Trunnion angle installation RH	1	BY	
	NA2648-070	NUT, Anchor (EN) (72962)	5	BY	
-97	HT7M-15	SCREW (HIS) (73197)	2	BY	
	NA2647-070	NUT, Anchor (EN) (72962)	2	BY	
-98	HT7M-15	SCREW (HIS) (73197)	1	BY	
	NA2648-070	NUT, Anchor (EN) (72962)	1	BY	
-99	HT7M-15	SCREW (HIS) (73197)	1	BY	
	MS29513-14	PACKING	1	BY	
	NA2647-070	NUT, Anchor (EN) (72962)	1	BY	
-100	HT7M-15	SCREW (HIS) (73197)	2	BY	
	MS29513-14	PACKING	2	BY	
	2648-070	NUT, Anchor (EN) (72962)	2	BY	
-101	209-14278	SHIM, Landing gear trunnion canted wl 69.962 upper	1	BY	
-102	MS20006-12	BOLT	3	BY	
	2W10-6	WASHER, Countersunk (NA) (89372)	3	BY	
	2W18-616	WASHER, Flat (NA) (89372)	3	BY	
	EB-064	NUT (EN) (72962)	3	BY	
-103	209-14279	SHIM, Landing gear trunnion canted wl 69.962 lower	1	BY	
-104	HT7M-15	SCREW (HIS) (73197)	2	BY	
	NA2647-070	NUT, Anchor (EN) (72962)	2	BY	
-105	HT7M-15	SCREW (HIS) (73197)	1	BY	
	NA2648-070	NUT, Anchor (EN) (72962)	1	BY	
-106	HT7M-15	SCREW (HIS) (73197)	1	BY	
	MS29513-14	PACKING	1	BY	
	NA2647-070	NUT, Anchor (EN) (72962)	1	BY	
-107	HT7M-14	SCREW (HIS) (73197)	3	BY	
	NA2647-070	NUT, Anchor (EN) (72962)	3	BY	
-108	HT7M-14	SCREW (HIS) (73197)	3	BY	
	MS29513-14	PACKING	3	BY	
	NA2648-070	NUT, Anchor (EN) (72962)	3	BY	
-109	HT7M-31	SCREW (HIS) (73197)	6	BY	
	209-14316-3	SHIM, Trunnion angle installation LH	1	BY	
	209-14316-4	SHIM, Trunnion angle installation RH	1	BY	
	NA2648-070	NUT, Anchor (EN) (72962)	6	BY	
-110	HT7M-19	SCREW (HIS) (73197)	5	BY	
	MS29513-14	PACKING	5	BY	
	209-14316-5	SHIM, Trunnion angle installation LH	1	BY	
	209-14316-6	SHIM, Trunnion angle installation RH	1	BY	
	NA2648-070	NUT, Anchor (EN) (72962)	5	BY	

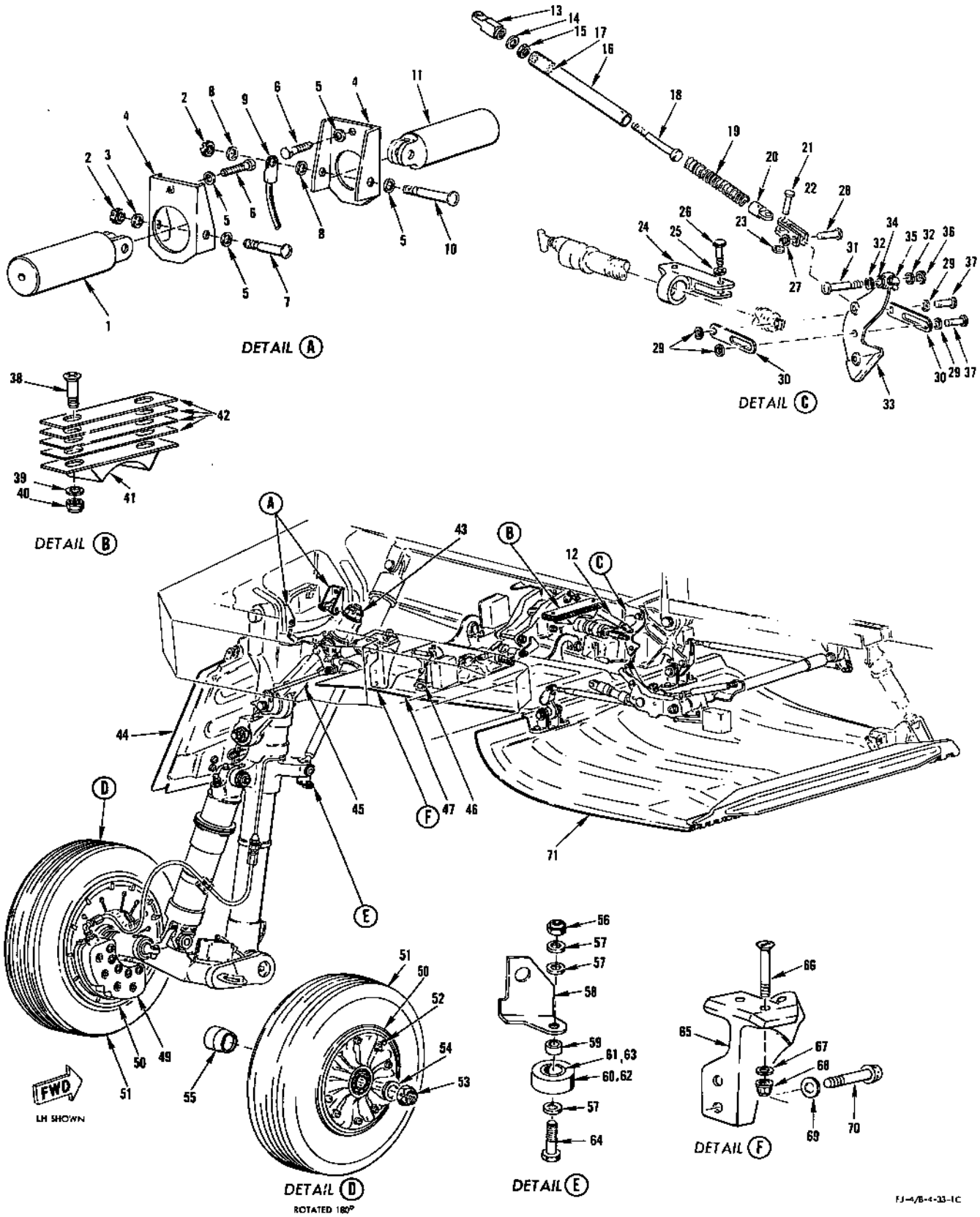

FIGURE 25 - UPLOCK MECHANISM, FITTINGS, STRUT AND WHEEL

UPLOCK MECHANISM, FITTINGS, STRUT AND WHEEL

FIGURE & INDEX NO.	PART NUMBER	1 2 3 4 5 6 7 NOMENCLATURE	UNITS PER ASSY.	USABLE ON CODE	S/C NO.
25-1	209-33131	PIN, Main landing gear trunnion aft	1		
-2	AN320-4	NUT	2		
-3	2W18-416M	WASHER, Flat (NA) (89372)	1		
-4	209-33129-11	RETAINER, Main landing gear trunnion pin (supersedes 209-33129 for future procurement)	2		
-5	2W18-416	WASHER, Flat (NA) (89372)	4		
-6	AN502-416-8	SCREW	2		
-7	AN24-34	BOLT (aft)	1		
-8	2W1AL9-16-40	WASHER, Plain (NA) (89372)	2		
-9	10B1-3-4-7	BONDING, Jumper (NA) (89372)	1		
-10	AN24-36	BOLT (forward)	1		
-11	209-33130	PIN, Main landing gear trunnion forward	1		
-12	209-33157	BUNGEE ASSEMBLY, Main landing gear uplock	1		
-13	F34-14	. ROD END (HEC) (73134)	1		
-14	2W11-4	. WASHER, Tab lock (NA) (89372)	1		
-15	AN316-4R	. NUT	1		
-16	209-33573-11	. CYLINDER ASSEMBLY, Main landing gear wheel door uplock bungee	1		
-17	209-33594-5	. . BEARING, Main landing gear wheel door uplock bungee	1		
-18	209-33572-5	. PISTON, Main landing gear wheel door uplock bungee	1		
-19	209-33157-3	. SPRING, Main landing gear uplock bungee (make from M-7 (MHSC) (76534))	1		
-20	209-33163	. END, Main landing gear uplock bungee	1		
-21	AN393-21	. PIN	1		
-22	209-33162	. UNIVERSAL, Main landing gear uplock bungee	1		
-23	2W18-10	. WASHER, Flat (NA) (89372)	1		
-24	209-33172-3	SUPPORT, Main landing gear uplock hook actuating	1		
-25	2W18-416	WASHER, Flat (NA) (89372)	2		
-26	AN4-12	BOLT	2		
-27	2W18-10	WASHER, Flat (NA) (89372)	1		
-28	AN393-19	PIN	1		
-29	2W18-8	WASHER, Flat (NA) (89372)	4		
-30	209-33184	LINK, Main landing gear uplock actuating slotted	2		
-31	AN25-24	BOLT	1		
-32	2W18-516	WASHER, Flat (NA) (89372)	2		
-33	209-33151-5	HOOK ASSEMBLY, Main landing gear uplock	1		
-34	4B20B5-006	. BUSHING, Press fit flanged (NA) (89372)	2		
-35	MS15001-4	. FITTING, Lubrication	1		
-36	AN320-5	NUT	1		
-37	151-33516	PIN, Main landing gear strut uplock latch actuating link attachment	2		
-38	AN509-10R14	SCREW	2		
-39	2W18-10	WASHER, Flat (NA) (89372)	2		
-40	AN365-1032	NUT	2		
-41	209-33173-11	STOP, Main landing gear up bumper LH (supersedes 209-33173-1 for future procurement)	1		
	209-33173-12	STOP, Main landing gear up bumper RH (supersedes 209-33173-2 for future procurement)	1		
-42	209-33174	SHIM, Main landing gear bumper stop	4		
-43	209-33136	NUT, Main landing gear side brace wing fitting	1		
-44	209-333181-1	DOOR ASSEMBLY, Main landing gear trunnion fairing LH (see figure 11 for breakdown)	1		
	209-333181-2	DOOR ASSEMBLY, Main landing gear trunnion fairing RH (see figure 11 for breakdown)	1		
-45	209-33501-1	BRACE ASSEMBLY, Main landing gear side LH (see figure 30 for breakdown)	1		
	209-33501-2	BRACE ASSEMBLY, Main landing gear side RH (see figure 30 for breakdown)	1		
-46		MAIN LANDING GEAR STRUT DOOR LOCK AND CLOSED INDICATING SWITCH AND EMERGENCY RELEASE MECHANISM (see Electrical and Instrument)			
-47	209-33151-1	DOOR ASSEMBLY, Main landing gear strut LH (see figure 12 for breakdown)	1	AW	
	209-333151-2	DOOR ASSEMBLY, Main landing gear strut RH (see figure 12 for breakdown)	1	AW	
	209-333151-101	DOOR ASSEMBLY, Main landing gear strut LH (see figure 12 for breakdown)	1	BY	
	209-333151-102	DOOR ASSEMBLY, Main landing gear strut RH (see figure 12 for breakdown)	1	BY	
-48	9473CL	STRUT ASSEMBLY, Aerol LH (main landing gear shock) (CP) (13002) (supersedes 9473BL (CP) (13002) for future procurement) (see figure 26 for breakdown)	1		456, 456A
	9473CR	STRUT ASSEMBLY, Aerol RH (main landing gear shock) (CP) (13002) (supersedes 9473BR (CP) (13002) for future procurement) (see figure 26 for breakdown)	1		456, 456A
-49	9540729C	BRAKE ASSEMBLY, 26 x 6.6 wheel (GY) (25500) (see figure 29 for breakdown)	1		
-50	9540856	WHEEL ASSEMBLY, 26 x 6.6 type VII (GY) (25500) (for breakdown see Technical Manual AN 03-25BC-2) (superseded by 9541415 for future procurement)	1		
	9541415	WHEEL ASSEMBLY, 26 x 6.6 (GY) (25500) (supersedes 9540856 for future procurement)	1		
-51	9450729	TIRE, 26 x 6.6 tubeless EHP type VII (GY) (25500)	1		
-52	209-33124	SPACER, Main landing gear wheel valve stem	1		
-53	9473-20	NUT, Axle (CP) (13002)	1		
	9473-76	PLUG, Cork (CP) (13002)	1		
-54	AN7503-31	WASHER	1		
-55	9473-63A	COLLAR, Axle (CP) (13002)	1		
-56	AN365-428	NUT	1		
-57	2W18-416M	WASHER, Flat (NA) (89372)	3		
-58	209-33010-1	SUPPORT, Main landing gear strut door bumper LH	1		
	209-33010-2	SUPPORT, Main landing gear strut door bumper RH	1		
-59	4B21S4-017	BUSHING, Spacer (NA) (89372)	1		
-60	209-33011	ROLLER, Main landing gear strut door bumper (superseded by 209-33009 for future procurement)	1		

UPLOCK MECHANISM, FITTINGS, STRUT AND WHEEL

FIGURE & INDEX NO.	PART NUMBER	1 2 3 4 5 6 7 NOMENCLATURE	UNITS PER ASSY.	USABLE ON CODE	S/C NO.
25-61	4B21S6-015	. BUSHING, Spacer (NA) (89372)	1		
-62	209-33009	ROLLER, Main landing gear strut door bumper assembly of (supersedes 209-33011 for future procurement)	1		
-63	209-33009-5	. BUSHING, Main landing gear strut door bumper assembly of roller	1		
-64	AN4-11A	BOLT	1		
-65	209-331145-3	FITTING, Main landing gear side brace unlock actuator support LH	1		
	209-331145-4	FITTING, Main landing gear side brace unlock actuator support RH	1		
-66	HT6M-19	SCREW (HIS) (73197)	2		
-67	2W18-616	WASHER, Flat (NA) (89372)	2		
-68	EB-064	NUT (EN) (72962)	2		
-69	2W10-7	WASHER, Countersunk (NA) (89372)	2		
	NA2647-070	NUT, Anchor (EN) (72962) (use on lower hole only)	1		
	52NA5-070	NUT, Anchor (EN) (72962) (use on upper hole only)	1		
-70	MS20007-18	BOLT	2		
-71	209-333101-1	DOOR ASSEMBLY, Main landing gear LH (see figure 45 for breakdown)	1		
	209-333101-2	DOOR ASSEMBLY, Main landing gear RH (see figure 45 for breakdown)	1		

SHOCK STRUT ASSEMBLY

FIGURE & INDEX NO.	PART NUMBER	1 2 3 4 5 6 7 NOMENCLATURE	UNITS PER ASSY.	USABLE ON CODE	S/C NO.
26	9473CL	STRUT ASSEMBLY, Aerol LH (main landing gear shock) (CP) (13002) (supersedes 9473BL for future procurement)	1		456, 456A, 498
	9473CR	STRUT ASSEMBLY, Aerol RH (main landing gear shock) (CP) (13002) (supersedes 9473BR for future procurement)	1		456, 456A, 498
-1	9473-180L	. COLUMN ASSEMBLY (CP) (13002)	1		
	9473-180R	. COLUMN ASSEMBLY (CP) (13002)	1		
-2	9473-80L	. . COLUMN (LH only) (CP) (13002)	1		
	9473-80R	. . COLUMN (RH only) (CP) (13002)	1		
-3	9473-16	. . BUSHING, Flanged trunnion (CP) (13002)	2		
-4	9473-17	. . BUSHING, Plain trunnion (CP) (13002)	2		
-5	9473-86	. . STUD (CP) (13002)	1		
-6	MS15001-3	. FITTING, Lubrication	1		
-7	MS15001-1	. FITTING, Lubrication	1		
-8	AN364D1614	. NUT	1		
-9	AN960-1616	. WASHER	1		
-10	9473-00	. OLEO ASSEMBLY (CP) (13002) (see figure 27 for breakdown)	1	FV	456, 456A
	9473A-00	. OLEO ASSEMBLY (CP) (13002) (see figure 27 for breakdown)	1	FH	456, 456A
	9473B-00	. OLEO ASSEMBLY (CP) (13002) (see figure 27 for breakdown)	1	FR	
-11	AN320-12	. NUT	1		
-12	9473-19	. WASHER (CP) (13002)	1		
-13	9473-32	. BOLT, Oleo to column (CP) (13002) (usable on strut Serial No. 9773 thru 9780)	1		
	9473-32A	. BOLT, Oleo to column (CP) (13002) (usable on strut Serial No. 9781 and subsequent)	1		
-14	9473-18	. BUSHING, Cover (CP) (13002)	1		
-15	79-048-250-1250	. ROLLPIN (EN) (72962)	1		
-16	AN320-7	. NUT	1		
-17	AN960D716L	. WASHER	1		
-18	9473-149	. BOLT ASSEMBLY, Eye (CP) (13002) (usable on strut Serial No. 9773 thru 9830)	1		
	9473-149A	. BOLT ASSEMBLY, Eye (CP) (13002) (usable on strut No. 9831 and subsequent)	1		
-19	9473-49	. . BOLT, Eye (CP) (13002) (usable on strut Serial No. 9773 thru 9830)	1		
	9473-49A	. . BOLT, Eye (CP) (13002) (usable on strut Serial No. 9831 and subsequent)	1		
-20	BSR4000C	. . BEARING (SWPC) (81376)	1		
-21	9473-95L	. WASHER (CP) (13002)	1		
	9473-95R	. WASHER (CP) (13002)	1		
-22	AN364D1018	. NUT	1		
-23	AN960-1016	. WASHER	4		
-24	9473-34	. BUSHING, Mooring ring (CP) (13002)	2		
-25	9473-35A	. SPRING (CP) (13002)	1		
-26	9473-36	. BOLT (CP) (13002)	1		
-27	9473-31L	. RING, Mooring (CP) (13002)	1		
	9473-31R	. RING, Mooring (CP) (13002)	1		
-28	9473-81	. PEG, Cylinder lug (CP) (13002)	2		
-29	MS21025-31	. NUT	1		
-30	AN7503-31	. WASHER	1		
-31	9473-63A	. COLLAR, Axle (CP) (13002)	1		
-32	9473-76	. PLUG, Cork (CP) (13002)	1		
-33	9473-33	. BOLT, Oleo to axle (CP) (13002) (usable on strut Serial No. 9773 thru 9780)	1		
	9473-33A	. BOLT, Oleo to axle (CP) (13002) (usable on strut Serial No. 9781 and subsequent)	1		
-34	EQ-1293	. PLATE, Name and instruction (CP) (13002)	1		
-35	EQ-1294	. PLATE, Warning (CP) (13002)	1		
-36	AN960-1616	. WASHER	1		
-37	AN364D1614	. NUT	1		
	9473-185BL	. AXLE ASSEMBLY (LH only) (CP) (13002) (superseded by 9473-185CL (CP) (13002) for future procurement)	1		498
	9473-185CL	. AXLE ASSEMBLY (LH only) (CP) (13002) (supersedes 9473-185BL (CP) (13002) for future procurement)	1		
	9473-185BR	. AXLE ASSEMBLY (RH only) (CP) (13002) (superseded by 9473-185CL (CP) (13002) for future procurement)	1		498
	9473-185CR	. AXLE ASSEMBLY (RH only) (CP) (13002) (supersedes 9473-185BR (CP) (13002) for future procurement)	1		
-38	AN24-54A	. . BOLT	1		
-39	9473-85BL	. . AXLE (LH only) (CP) (13002) (superseded by 9473-85CL (CP) (13002) for future procurement)	1		498
	9473-85CL	. . AXLE (LH only) (CP) (13002) (supersedes 9473-85BL (CP) (13002) for future procurement)	1		
	9473-85BR	. . AXLE (RH only) (CP) (13002) (superseded by 9473-85CR (CP) (13002) for future procurement)	1		498
	9473-85CR	. . AXLE (RH only) (CP) (13002) (supersedes 9473-85BR for future procurement)	1		
-40	BSR16000GC	. . BEARING (SWPC) (81376)	1		
-41	AN960-416	. . WASHER	1		
-42	AN364-428	. . NUT	1		
-43	9473-92A	. . ADAPTER, Jackpad (CP) (13002)	1		
-44	9473-30	. . BUSHING (CP) (13002)	2		
-45	AN364-428	. NUT	1		
-46	AN960-416	. WASHER	1		
-47	9473-93	. BOLT, Jackpad (CP) (13002)	1		
-48	MS15001-3	. FITTING, Lubrication	1		
-49	1743	. FITTING, Lubrication (AL) (95879)	2		
-50	AN320D14	. NUT	1		

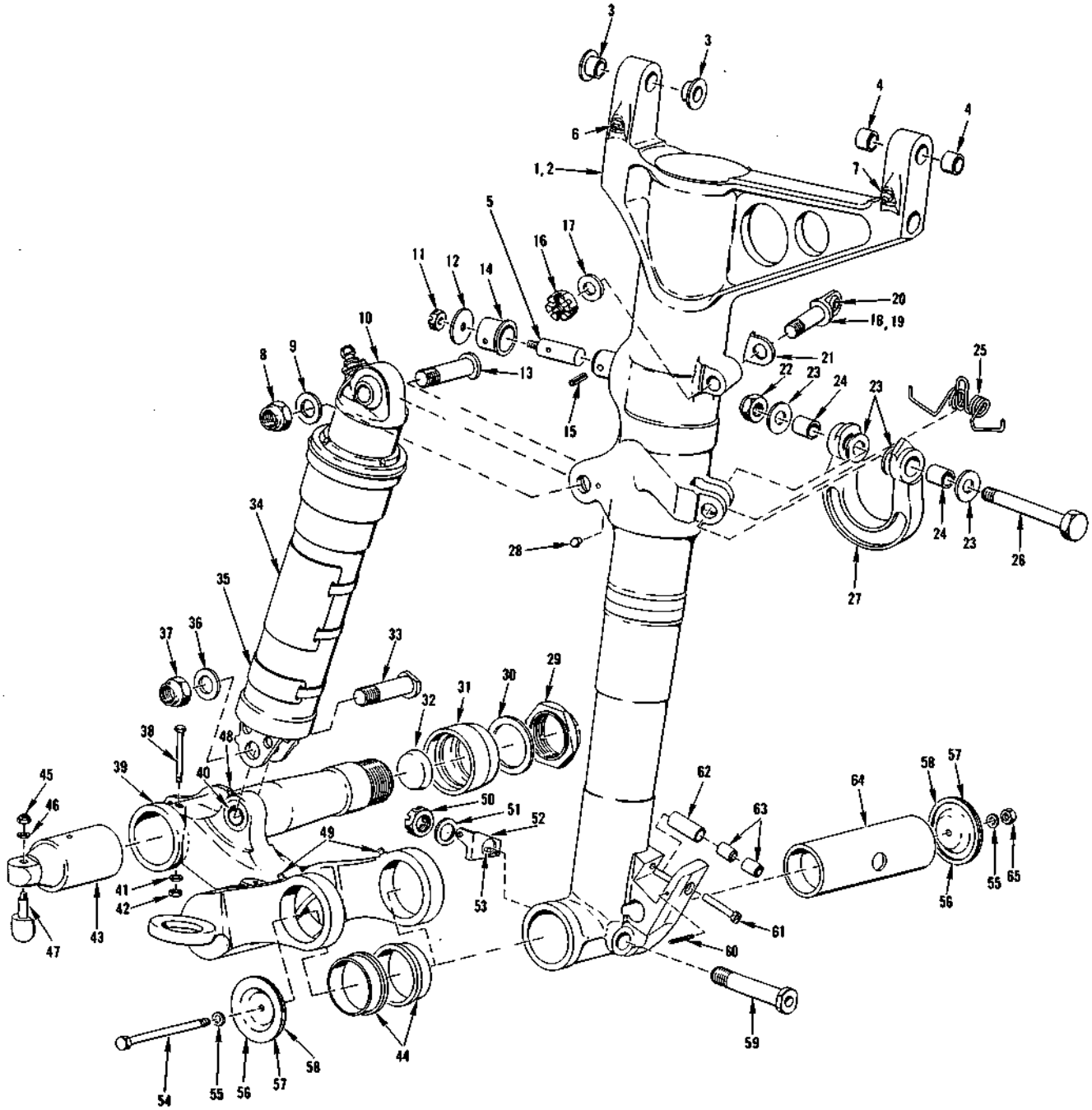

FIGURE 26 - SHOCK STRUT ASSEMBLY

SHOCK STRUT ASSEMBLY

FIGURE & INDEX NO.	PART NUMBER	1	2	3	4	5	6	7	NOMENCLATURE	UNITS PER ASSY.	USABLE ON CODE	S/C NO.
26-51	AN960-1416	.	WASHER (LH strut)							1		
	AN960-1416	.	WASHER (RH strut)							2		
-52	9473-62A	.	TAB (CP) (13002) (used on LH strut only)							1		
-53	9473-64A	.	PIN, Tab (CP) (13002) (used on LH strut only)							1		
-54	AN4DD61A	.	BOLT							1		
-55	110-1/4	.	WASHER, Dynaseal (CP) (13002)							2		
-56	9473-166	.	CAP ASSEMBLY, Dust (CP) (13002)							2		
-57	9473-66	.	.	CAP, Dust cap assembly (CP) (13002)						2		
-58	9473-65	.	.	RING, Dust cap assembly felt (CP) (13002)						2		
-59	9473-59	.	BOLT, Shaft retainer (CP) (13002)							1		
-60	59-028-125-1375	.	ROLLPIN (EN) (72962)							1		
-61	9473-29	.	SHAFT, Uplock sleeve (CP) (13002)							1		
	9473-121	.	SLEEVE ASSEMBLY, Uplock (CP) (13002)							1		
-62	9473-31	.	.	SLEEVE (CP) (13002)						1		
-63	HRA7	.	.	BEARING, Needle (TOR) (60380)						2		
-64	9473-88	.	SHAFT, Axle to column (CP) (13002)							1		
-65	AN365D428A	.	NUT							1		

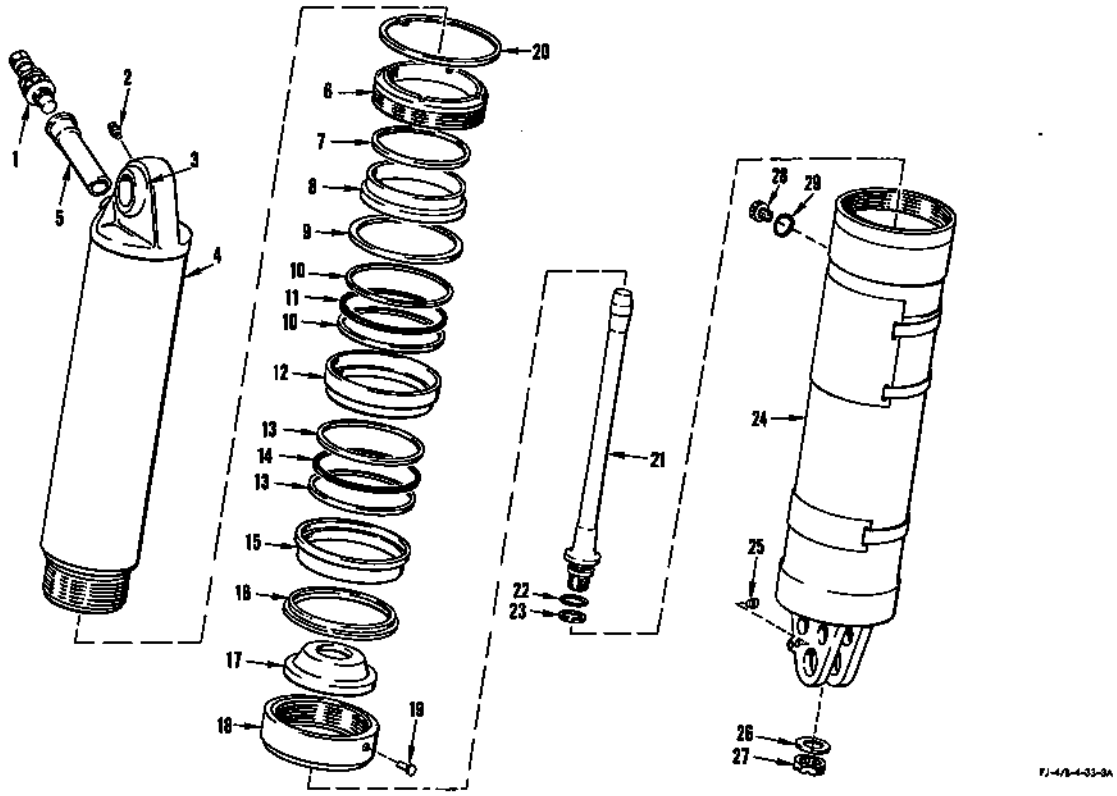

FIGURE 27 - OLEO ASSEMBLY

FIGURE & INDEX NO.	PART NUMBER	1 2 3 4 5 6 7 NOMENCLATURE	UNITS PER ASSY.	USABLE ON CODE	S/C NO.
27	9473-00	OLEO ASSEMBLY (CP) (13002) (see figure 26 for next assembly) (superseded by 9473A-00 (CP) (13002) for future procurement)	1	FV	456, 456A
	9473A-00	OLEO ASSEMBLY (CP) (13002) (see figure 26 for next assembly) (supersedes 9473-00 (CP) (13002) for future procurement)	1	FH	456, 456A
	9473B-00	OLEO ASSEMBLY (CP) (13002) (see figure 26 for next assembly)	1	FR	
-1	AN6287-1	. VALVE	1		
-2	MS15001-1	. FITTING, Lubrication	1		
	9473-104	. PISTON ASSEMBLY (CP) (13002)	1		
-3	BSR16000GC	. . BEARING (SWPC) (81376)	1		
-4	9473-4	. . PISTON (CP) (13002)	1	ET	456, 456A
	9473-4A	. . PISTON (CP) (13002)	1	FR	
-5	9473-4-3	. . . TUBE, Oil filler (CP) (13002)	1		
-6	9473-46	. . NUT, Gland (CP) (13002)	1		
-7	AN6231A33	. . SCRAPER	1		
-8	9473-9	. . BEARING (CP) (13002)	1		
-9	9473-55	. . WASHER (CP) (13002)	1		
-10	AN6246-44	. . RING	2		
-11	AN6227-44	. . PACKING	1		456A
	AN6227B44	. . PACKING	1		
-12	153-44	. . ADAPTER, Packing (CP) (13002)	1		
-13	AN6246-47	. . RING	2		
-14	AN6227-47	. . PACKING	1		456A
	AN6227B47	. . PACKING	1		
-15	9473-10	. . FOLLOWER (CP) (13002)	1		
-16	9473-5	. . VALVE, Recoil (CP) (13002)	1		
-17	9473-23	. . PLATE, Orifice (CP) (13002)	1		
-18	9473-3A	. . HEAD, Piston (CP) (13002)	1		
-19	138-10	. . PIN, Piston head (CP) (13002)	3		
-20	9473-74	. RING, Lock (CP) (13002)	1		
	9473-102	. CYLINDER ASSEMBLY (CP) (13002)	1		
-21	9473-13	. . PIN, Metering (CP) (13002) (superseded by 9473A-13 (CP) (13002) for future procurement)	1		
	9473A-13	. . PIN, Metering (CP) (13002) (supersedes 9473-13 (CP) (13002) for future procurement)	1		
-22	AN6227-7	. . PACKING	1		456A
	AN6227B	. . PACKING	1		
-23	AN6246-7	. . RING	1		
-24	9473-2	. . CYLINDER (CP) (13002)	1		
-25	9473-61	. . PEG, Cylinder lug (CP) (13002)	1		
-26	AN960-616	. . WASHER	1		
-27	AN320-6	. . NUT	1		
-28	9473-90	. PLUG, Bleeder (CP) (13002)	1		
-29	AN6290-3	. GASKET	1		

FIGURE 28 DELETED

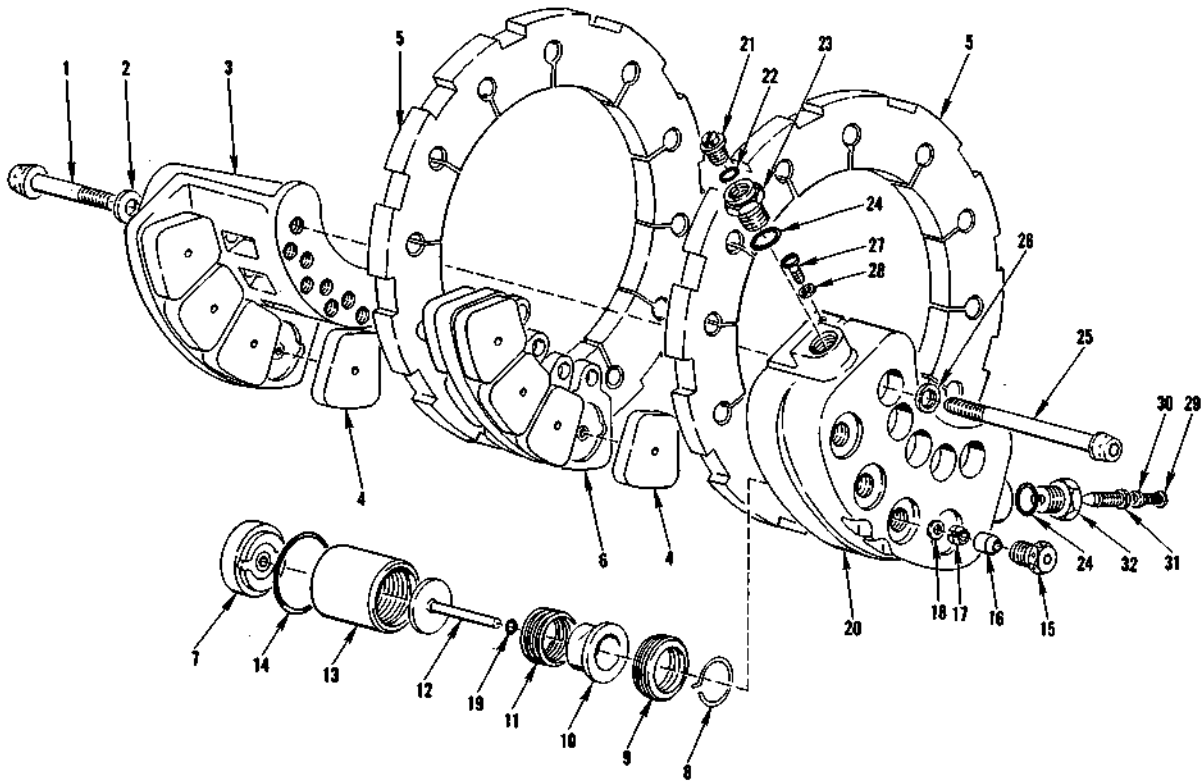

FIGURE 29 - WHEEL BRAKE ASSEMBLY

FIGURE & INDEX NO.	PART NUMBER	1 2 3 4 5 6 7 NOMENCLATURE	UNITS PER ASSY.	USABLE ON CODE
29	9540729C	BRAKE ASSEMBLY, 26 x 6.6 wheel (GY)	1	
-1	9510814	. BOLT, Steel socket head 7/16 - 20 (GY)	4	
-2	NAS143-7C	. WASHER	4	
-3	9521391	. PLATE SUBASSEMBLY (GY)	1	
-4	9521388	. LINING, Brake segment type (GY)	12	
-5	9530332	. DISC, Brake (GY)	2	
-6	9530894	. CARRIER SUBASSEMBLY, Movable center (GY)	1	
-7	9521386	. LINING, Brake (GY)	4	
	9521759C	. PISTON SUBASSEMBLY (GY)	4	
-8	9510815	. . RING, Retaining (GY)	1	
-9	9510812	. . RING, Spring retaining and adjusting (GY)	1	
-10	9510811	. . GUIDE, Spring (GY)	1	
-11	9521757	. . SPRING, Brake release (GY)	1	
-12	9510574	. . PIN, Self adjusting (GY)	1	
-13	9530892C	. . PISTON (GY)	1	
-14	AN6227-32	. PACKING	4	
-15	9510894	. NUT, Self adjusting pin (GY)	4	
-16	9510321	. SPACER, Self adjusting grip (GY)	4	
-17	9510895	. GRIP, Self adjusting pin (GY)	4	
-18	511820-7	. WASHER, Steel (GY)	4	
-19	AN6227-5	. PACKING	4	
-20	9521761C	. HOUSING SUBASSEMBLY, Brake (GY)	1	
	1191-3CNx-3/8	. . INSERT, Heli-coil (AF)	4	
-21	1604-76	. PLASTIC PLUG 7/16 - 20 (WDAA) (used for shipping only)	1	
-22	AN6290-5	. GASKET	1	
-23	9510621	. BUSHING, Inlet (GY)	1	
-24	AN6290-8	. GASKET	2	
-25	9521572	. BOLT, Steel socket head (GY)	5	
-26	NAS143-7C	. WASHER	5	
-27	AN501A10-8	. SCREW	2	
-28	AN960-10L	. WASHER	2	
-29	AN520-10-5	. SCREW (round head bleeder)	1	
-30	511846-4	. WASHER, Aluminum (bleeder) (GY)	1	
-31	AN6204-1	. VALVE (hydraulic bleeder)	1	
-32	9511157	. ADAPTER, Bleeder (GY)	1	

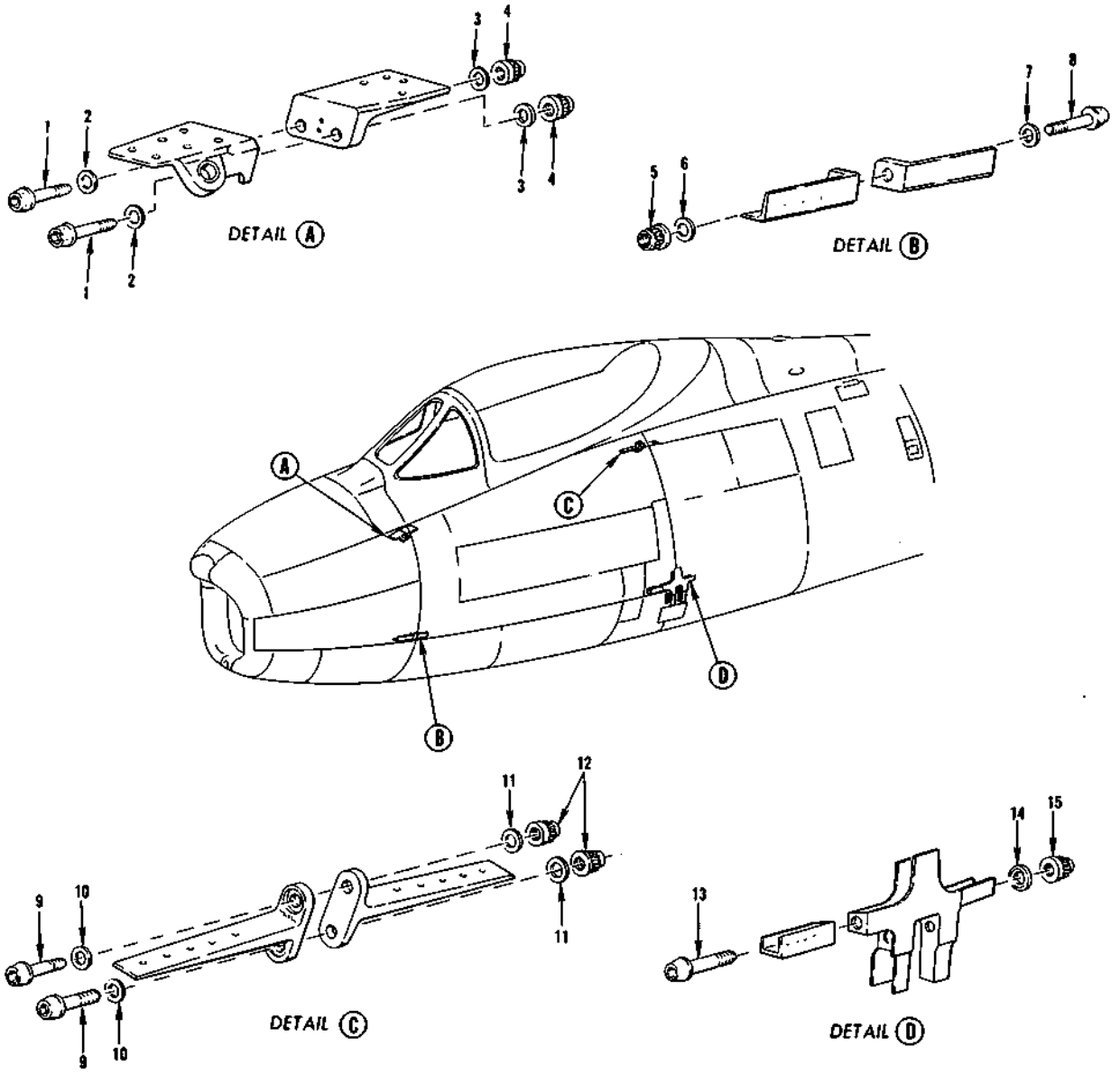

FIGURE 32 - ATTACHING PARTS (FUS STA 53 AND STA 131)

FIGURE & INDEX NO.	PART NUMBER	1 2 3 4 5 6 7 NOMENCLATURE	UNITS PER ASSY.	USABLE ON CODE
32-1	NAS145-26	BOLT	4	
-2	NAS143-5C	WASHER	4	
-3	NAS143-5	WASHER	4	
-4	EB-054	NUT (EN)	4	
-5	EB-108	NUT (EN)	2	
-6	NAS143-10	WASHER	2	
-7	NAS143-10C	WASHER	2	
-8	NAS150-34	BOLT	2	
-9	NAS146-26	BOLT	4	
-10	NAS143-6C	WASHER	4	
-11	NAS143-6	WASHER	4	
-12	EB-064	NUT (EN)	4	
-13	MS20009-14	BOLT	2	
-14	2W10-9	WASHER, Countersunk (NA)	2	
-15	EB-098	NUT (EN)	2	

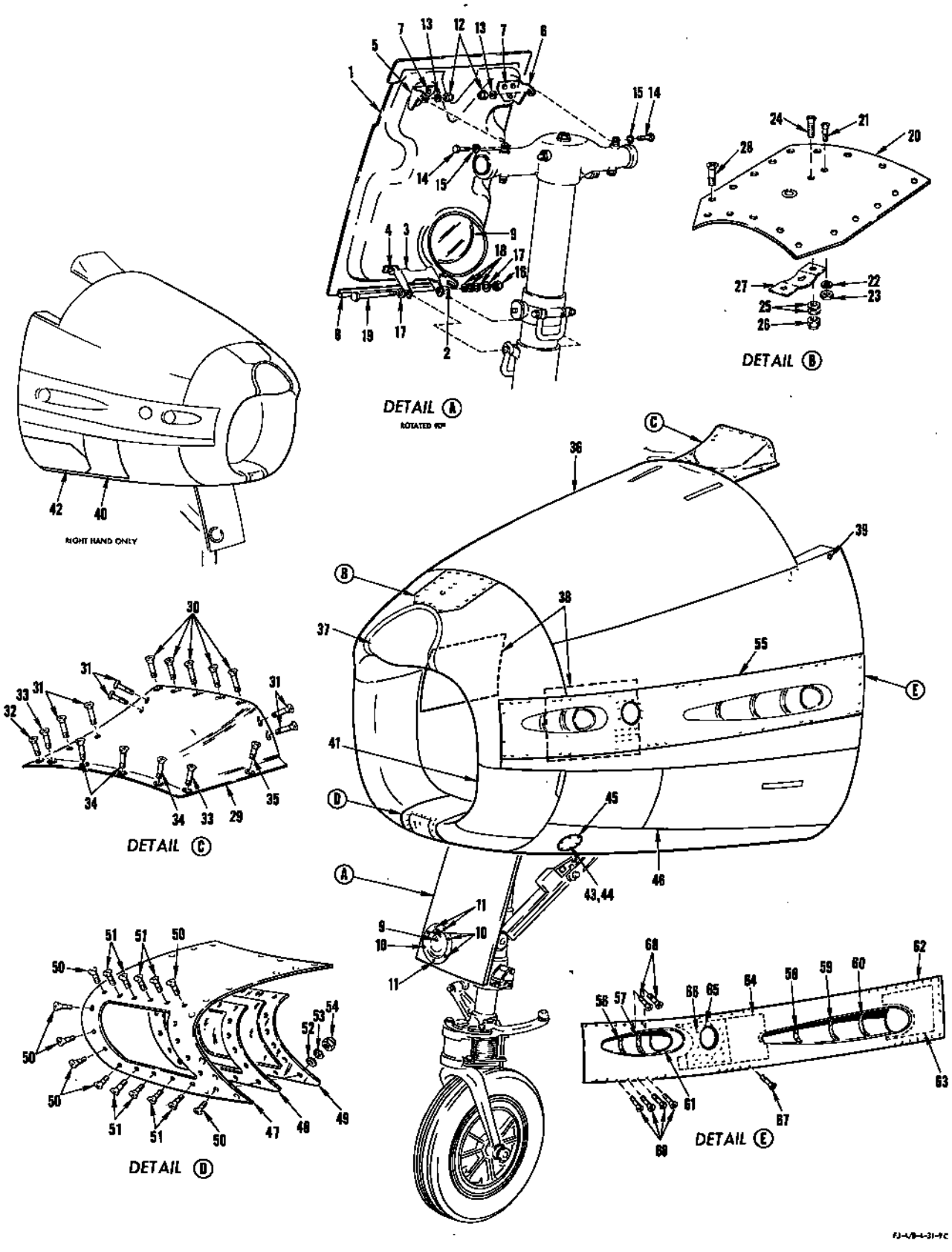

FIGURE 33 - ACCESS DOORS, INSPECTION DOORS AND PANELS (FUS STA 0 TO 53)

ACCESS DOORS, INSPECTION DOORS AND PANELS (FUS STA 0 TO 53)

FIGURE & INDEX NO.	PART NUMBER	1 2 3 4 5 6 7 NOMENCLATURE	UNITS PER ASSY.	USABLE ON CODE	S/C NO.
33-1	194-34351	DOOR ASSEMBLY, Nose landing gear strut	1		
-2	194-34351-45	. BRACKET, Nose landing gear strut door assembly	1		
-3	194-34353	. BRACKET, Nose landing gear strut door rear	1		
	ATTACHING PARTS				
-4	AN4-11A	. BOLT	2		
	2W17-416	. WASHER, Corrosion-resistant (NA) (89372) (use under nut)	2		
	2W1AL17-16-064	. WASHER, Plain (NA) (89372)	AR		
	2W1AL17-16-040	. WASHER, Plain (NA) (89372)	AR		
	2W1AL17-16-020	. WASHER, Plain (NA) (89372)	AR		
	3600-2-048	. NUT, Anchor (NUS) (80539)	2		
	---*---				
-5	181-34352-1	. BRACKET ASSEMBLY, Nose landing gear strut door forward LH	1		
-6	181-34352-2	. BRACKET ASSEMBLY, Nose landing gear strut door forward RH	1		
-7	AN3-5A	. BOLT	6		
	3600-2-02	. NUT, Anchor (NUS) (80539)	6		
-8	5W1-4-12-0	. WEATHERSEAL (NA) (89372)	1		
-9	194-34354	. GLASS, Nose landing gear strut door	1		
	ATTACHING PARTS				
-10	AN509-8-13	. SCREW	4		
	194-34351-43	. PAD, Nose landing gear strut door assembly	4		
	194-34351-35	. SPACER, Nose landing gear strut door assembly	4		
	3600-2-82	. NUT, Anchor (NUS) (80539)	4		
-11	AN509-8-9	. SCREW	3		
	22A38-82BC	. NUT, Anchor (EN) (72962)	3		
	---*---				
-12	AN365-428	NUT	2		
-13	179-34354	WASHER, Nose landing gear strut door serrated	2		
-14	AN4-10A	BOLT	2		
-15	2W18-416	WASHER, Flat (NA) (89372)	2		
-16	AN364-624	NUT	1		
-17	AN916-616L	WASHER	2		
-18	AN960-616	WASHER	3		
-19	AN6-40A	BOLT	1		
-20	209-31035-21	DOOR ASSEMBLY, Fuselage nose air stream detector	1	Y	
	209-31035-31	DOOR ASSEMBLY, Fuselage nose air stream detector	1	Z	
-21	AN507-440R5	. SCREW	1		
-22	AN935-4L	. WASHER	1		
-23	AN341-4	. NUT	1		
-24	AN507-832R8	. SCREW	1		
-25	2W18-8L	. WASHER, Flat (NA) (89372)	2		
-26	AN365-832	. NUT	1		
-27	209-31110-11	. PLUG ASSEMBLY, Fuselage nose air stream detector hole	1		
-28	AN509-10R7	SCREW	18		
	3600-02	NUT, Anchor (NUS) (80539)	8		
	3610-02	NUT, Anchor (NUS) (80539) (interchangeable with 12LHA407-02 (EN) (72962))	10		
-29	181-31871-21	FAIRING, Cockpit enclosure fuselage station 45 to station 52.656 windshield	1		
-30	AN509-8R15	SCREW	5		
-31	AN509-10R14	SCREW	6		
-32	AN509-10R12	SCREW	1		
-33	AN509-10R11	SCREW	2		
-34	AN509-10R10	SCREW	3		
-35	AN509-10R9	SCREW	1		
-36	181-31004-151	DOOR ASSEMBLY, Fuselage nose upper access (radio and radar electrical access) (see figure 34 for breakdown)	1		
-37	194-74113	RADOME ASSEMBLY, Solid wall AN/APG-30 radio antenna (See Radio and Radar)	1		
-38	194-53550-1	DOOR ASSEMBLY, Heat and vent system gun bay gas purging LH (see figure 36 for breakdown)	1		
	194-53550-2	DOOR ASSEMBLY, Heat and vent system gun bay gas purging RH (see figure 36 for breakdown)	1		
-39	181-315114-11	PLUG ASSEMBLY, Fuselage station 52 upper longeron forward barrel nut (supersedes 181-315114 for future procurement)	1		
	181-315114-9	. PLUG, Fuselage station 52 upper longeron forward barrel nut plug assembly	1		
	181-315114-7	. PIN, Fuselage station 52 upper longeron forward barrel nut plug assembly	1		
-40	194-31112-141	DOOR, Electrical equipment access	1	BK	366
	ATTACHING PARTS				
	AN509-10R11	SCREW	41		366
	---*---				
	194-31112-181	GANG CHANNEL, Fuselage station 0 to station 53 frame assembly door (make from 22NG4-02-J10 (EN) (72962))	1		
	194-31112-183	GANG CHANNEL, Fuselage station 0 to station 53 frame assembly door (make from G1000-1032-10 (KNM) (75237))	1		
	194-31112-186	GANG CHANNEL, Fuselage station 0 to station 53 frame assembly door (make from 22NG41-02-J10 (EN) (72962))	1		
	MK3000-1032	NUT, Anchor (KNM) (75237)	3		
	MK1000-1032	NUT, Anchor (KNM) (75237)	3		
	3600-02	NUT, Anchor (NUS) (80539)	10		
-41	209-71129	RADOME, Dipole antenna forward nose assembly of (see Radio and Radar)	1	FR	
-42	209-31099	FAIRING, Fuselage station 38.5 to station 53 RH air turbine assembly of (see Surface and Secondary Controls)	1	ER	
	209-31099-61	FAIRING, Fuselage station 38.5 to station 53 LH air turbine assembly of (see Surface and Secondary Controls)	1	DJ	366

ACCESS DOORS, INSPECTION DOORS AND PANELS (FUS STA 0 TO 53)

FIGURE & INDEX NO.	PART NUMBER	1 2 3 4 5 6 7 NOMENCLATURE	UNITS PER ASSY.	USABLE ON CODE	S/C NO.
33-43	194-31006	DOOR ASSEMBLY, Fuselage station 20.3 nose landing gear trunnion pin access	2	Y	
	194-31006-3	. COVER, Fuselage station 20.3 nose landing gear trunnion pin access door assembly	1	Y	
	9C1-2-5	. CHAIN, Safety (NA) (89372)	1	Y	
-44	215-31006	DOOR, Fuselage station 20.3 nose landing gear trunnion pin access assembly of	2	Z	
	215-31006-3	. COVER, Fuselage station 20.3 nose landing gear trunnion pin access door assembly	1	Z	
	9C1-2-5	. CHAIN, Safety (NA) (89372)	1	Z	
-45	AN509-10R7	SCREW	12		
	22A38-02	NUT, Anchor (EN) (72962)	12		
-46	194-31005	DOOR ASSEMBLY, Fuselage nose lower side (see figure 35 for additional breakdown)	1		
-47	209-31114-39	SKIN, Fuselage station 0 to station 15 nose fairing assembly approach light	1		
-48	209-31114-41	GASKET, Fuselage station 0 to station 15 nose fairing assembly approach light cork rubber adhesive	1		
-49	209-31117	GLASS, Lower fuselage nose approach light	1		
-50	AN509-8R9	SCREW	11		
-51	AN509-8R8	SCREW	8		
-52	209-31114-45	WASHER, Fuselage station 0 to station 15 nose fairing assembly approach light polyethylene	18		
-53	2W18-8	WASHER, Flat (NA) (89372)	18		
-54	AN364-832	NUT	18		
-55	209-61140-61	PANEL, Gun blast assembly of LH	1		
	209-61140-62	PANEL, Gun blast assembly of RH	1		
-56	209-61140-33	. DEFLECTOR, Panel gun blast LH	1		
	209-61140-34	. DEFLECTOR, Panel gun blast RH	1		
	NAS333CP6	. BOLT	3		
	2W17-10L	. WASHER, Corrosion-resistant steel (NA) (89372)	3		
	AN310-3	. NUT	3		
-57	209-61140-31	. DEFLECTOR, Panel gun blast LH	1		
	209-61140-32	. DEFLECTOR, Panel gun blast RH	1		
	NAS333CP6	. BOLT	5		
	2W17-10M	. WASHER, Corrosion-resistant steel (NA) (89372)	5		
	AN310-3	. NUT	5		
-58	209-61140-29	. DEFLECTOR, Panel gun blast LH	1		
	209-61140-30	. DEFLECTOR, Panel gun blast RH	1		
	NAS333CP6	. BOLT	2		
	2W17-10M	. WASHER, Corrosion-resistant steel (NA) (89372)	2		
	AN310-3	. NUT	2		
-59	209-61140-27	. DEFLECTOR, Panel gun blast LH	1		
	209-61140-28	. DEFLECTOR, Panel gun blast RH	1		
	NAS333CP6	. BOLT	5		
	2W17-10M	. WASHER, Corrosion-resistant steel (NA) (89372)	5		
	AN310-3	. NUT	5		
-60	209-61140-25	. DEFLECTOR, Panel gun blast LH	1		
	209-61140-26	. DEFLECTOR, Panel gun blast RH	1		
	NAS333CP6	. BOLT	7		
	2W17-10M	. WASHER, Corrosion-resistant steel (NA) (89372)	7		
	AN310-3	. NUT	7		
-61	209-61154-1	. MANIFOLD, Gun blast panel forward port LH	1		
	209-61154-2	. MANIFOLD, Gun blast panel forward port RH	1		
-62	209-61140-19	. SKIN, Panel gun blast LH (commercial pure titanium sheet)	1		
	209-61140-20	. SKIN, Panel gun blast RH (commercial pure titanium sheet)	1		
-63	209-61140-21	. DOUBLER, Panel gun blast LH (commercial pure titanium sheet)	1		
	209-61140-22	. DOUBLER, Panel gun blast RH (commercial pure titanium sheet)	1		
-64	209-61140-23	. DOUBLER, Panel gun blast LH (commercial pure titanium sheet)	1		
	209-61140-24	. DOUBLER, Panel gun blast RH (commercial pure titanium sheet)	1		
-65	209-61153	. SCREW, Gun blast panel manifold attaching	20		
	2W17-416M	. WASHER, Corrosion-resistant steel (NA) (89372)	20		
	AN310-4	. NUT	20		
-66	209-61153	. SCREW, Gun blast panel manifold attaching	2		
	2W17-416M	. WASHER, Corrosion-resistant steel (NA) (89372)	2		
	AN320-4	. NUT	2		
-67	AN509-10R12	SCREW	72		
	22NA401-02	NUT, Anchor (EN) (72962)	57		
	22NA5-02	NUT, Anchor (EN) (72962)	6		
	22NA17A-02	NUT, Anchor (EN) (72962)	1		
	22NA217-22-02	NUT, Anchor (EN) (72962)	5		
-68	AN509-416R13	SCREW	4		
	22NA5-048	NUT, Anchor (EN) (72962)	2		
	22NA17A-048	NUT, Anchor (EN) (72962)	3		
	MK3000-428	NUT, Anchor (KNM) (75237)	1		

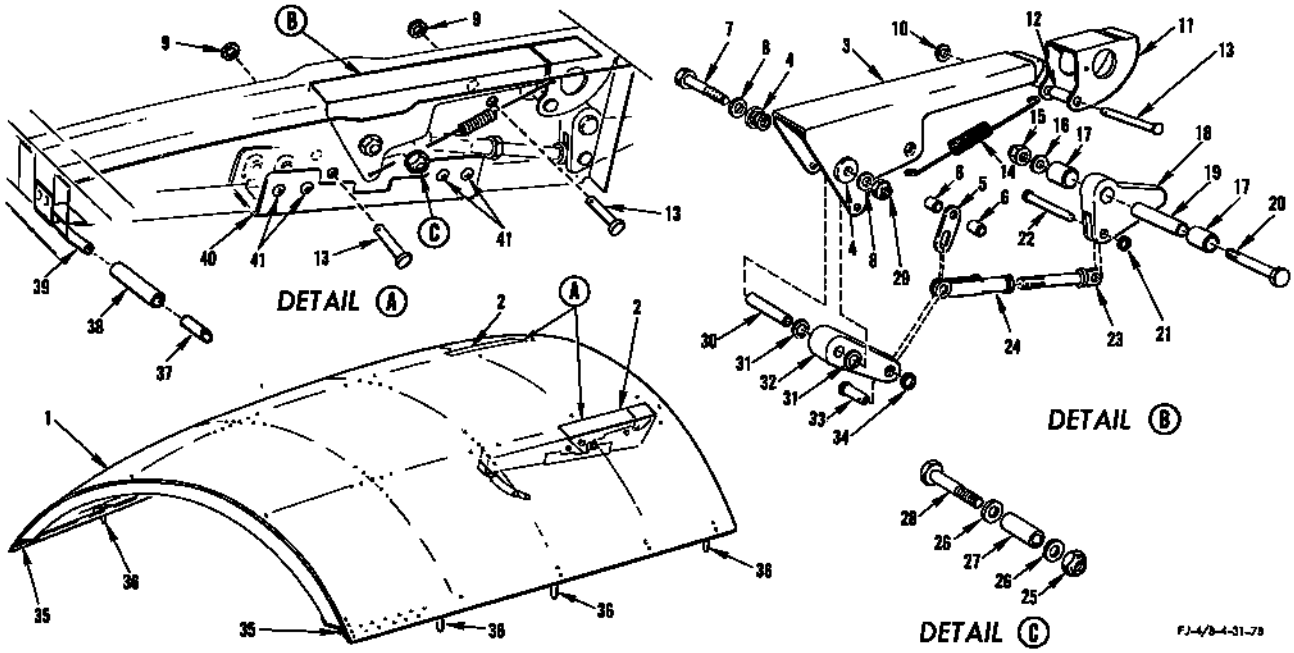

FIGURE 34 - RADIO, RADAR AND ELECTRICAL BAY ACCESS DOOR

FIGURE & INDEX NO.	PART NUMBER	1 2 3 4 5 6 7 NOMENCLATURE	UNITS PER ASSY.	USABLE ON CODE	S/C NO.
34-1	181-31004-151	DOOR ASSEMBLY, Fuselage nose upper access	1		
-2	181-31012	. HANDLE ASSEMBLY, Fuselage nose upper access door complete	2		
-3	181-31199-3	. . HANDLE ASSEMBLY, Fuselage nose upper access door latch	1		
-4	181-31022-3	. . . BUSHING, Fuselage nose door	2		
-5	181-31008	. . CAM, Fuselage nose upper access door latch	1		
-6	NAS42C6-18	. . SPACER	2		
-7	AN3-17A	. BOLT	2		
-8	2W18-10M	. WASHER, Flat (89372) (NA)	4		
-9	AN960D10L	. WASHER	4		
-10	2W18-10M	. WASHER, Flat (89372) (NA)	2		
-11	181-31019-1	. CATCH, Fuselage nose upper door latch LH	2		
-12	NAS43C3-56	. SPACER	2		
	2W18-10	. WASHER, Flat (89372) (NA)	8		
-13	AN393-49	. PIN	6		
-14	181-31021	. SPRING, Tension	2		
-15	AN365-428	. NUT	2		
-16	AN960D416L	. WASHER	2		
-17	NAS43C6-29	. SPACER	4		
-18	181-31010	. CATCH, Fuselage nose access door latch	2		
-19	NAS43C4-82	. SPACER	2		
-20	NAS144-34	. BOLT	2		
-21	AN960D10L	. WASHER	2		
-22	AN393-13	. PIN	2		
-23	AN43-32A	. BOLT	2		
-24	AN436-2	. CLEVIS	2		
-25	AN365-1032	. NUT	2		
-26	AN960C10L	. WASHER	4		
-27	NAS43DD3-84	. SPACER	2		
-28	AN3-16A	. BOLT	2		
-29	AN365-1032	. NUT	2		
-30	4B2183-109	. BUSHING, Spacer (89372) (NA)	2		
-31	2W18-516	. WASHER, Flat (89372) (NA)	4		
-32	181-31011	. LINK, Fuselage nose upper access door latch	2		
-33	AN394-19	. PIN	2		
-34	AN960D10L	. WASHER	2		
-35	181-31004-67	. SEAL, Fuselage nose upper access door assembly	2		
-36	181-312215	. STUD, Fuselage nose upper access shear	6		
	2W1-20-16-64	. WASHER, Plain (89372) (NA)	6		
	AN365-524	. NUT	6		
-37	181-31004-93	. TUBE, Fuselage nose upper access door assembly (LH side)	1		
	181-31004-83	. TUBE, Fuselage nose upper access door assembly (RH side)	1		
-38	181-31004-91	. TUBE, Fuselage nose upper access door assembly (LH side)	1		
	181-31004-85	. TUBE, Fuselage nose upper access door assembly (RH side)	1		
-39	194-311116	. DRAIN ASSEMBLY, Canted station 31.680 access door handle (LH side)	1		
-40	181-31004-95	. CHANNEL, Fuselage nose upper access door assembly	1		
	ATTACHING PARTS				
-41	AN515-8R6	. SCREW	16		
	2W18-8	. WASHER, Flat (89372) (NA)	16		
	MK3000-832	. NUT, Anchor (KNM) (75237)	16		

---*---

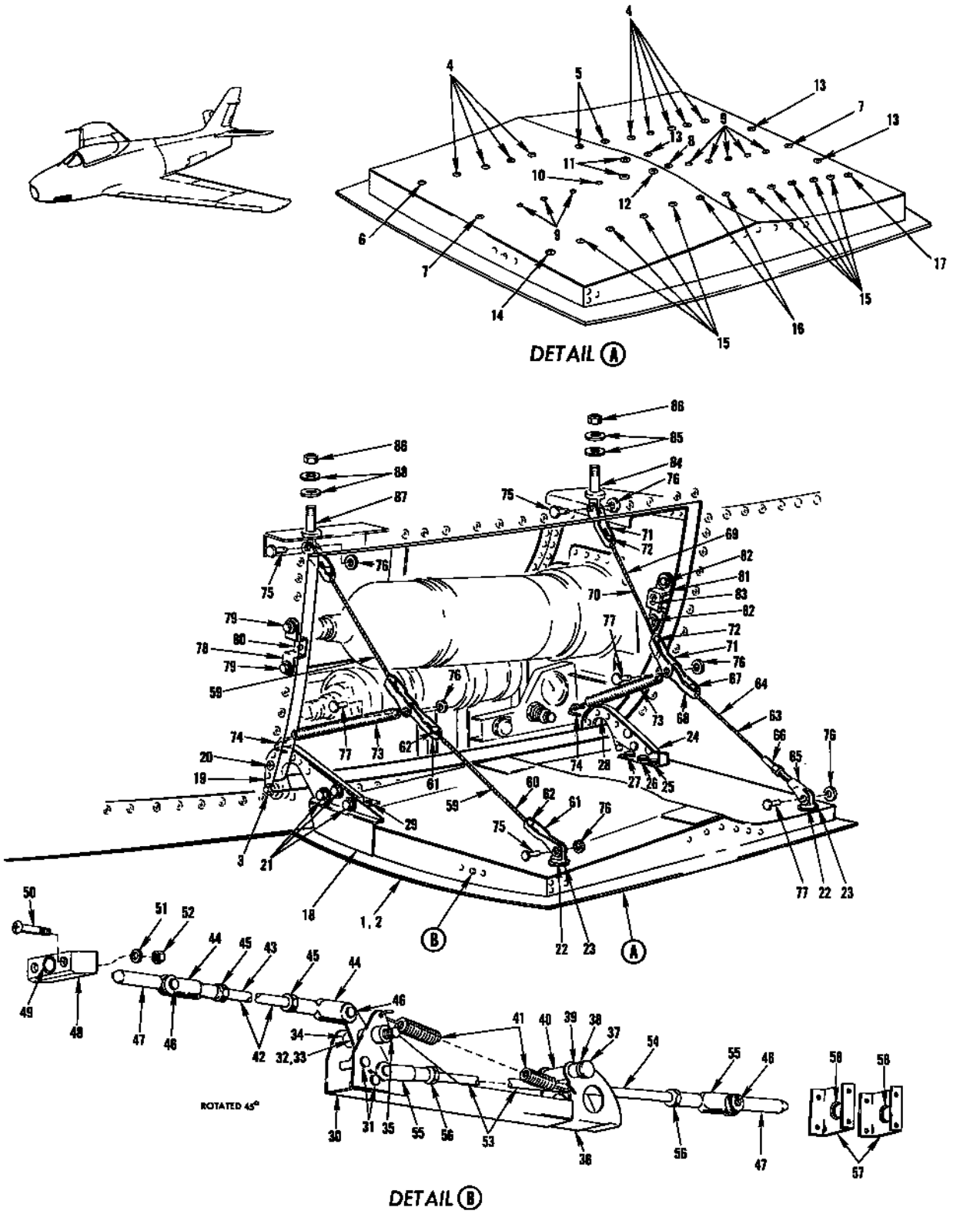

FIGURE 35 - OXYGEN BOTTLE ACCESS DOOR

OXYGEN BOTTLE ACCESS DOOR

FIGURE & INDEX NO.	PART NUMBER	1 2 3 4 5 6 7 NOMENCLATURE	UNITS PER ASSY.	USABLE ON CODE	S/C NO.
35-1	194-31005-1	DOOR ASSEMBLY, Fuselage nose lower side LH	1	BR	357
	194-31005-2	DOOR ASSEMBLY, Fuselage nose lower side RH	1	BJ	366
-2	194-31005-121	DOOR ASSEMBLY, Fuselage nose lower side LH	1	BS	
	ATTACHING PARTS				
-3	AN3-6A	BOLT	4		366
	4B21S3-08	BUSHING, Spacer (NA) (89372) (forward hinge)	2		366
	4B21S3-09	BUSHING, Spacer (NA) (89372) (aft hinge)	2		
	2W18-10	WASHER, Flat (NA) (89372)	8		366
	12LH5-02	NUT, Anchor (EN) (72962) (forward hinge)	2		
	22A17-02	NUT, Anchor (NUS) (80539) (aft hinge)	2		
	---*---				
-4	NAS221-10	. SCREW	9		366
	AN960D10	. WASHER	9		366
	3600-2-02	. NUT, Anchor (NUS) (80539)	9		366
-5	NAS221-10	. SCREW	2		366
	AN960D10	. WASHER	2		366
	3610-02	. NUT, Anchor (NUS) (80539) (interchangeable with 12LHA407-02 (EN) (72962)	2		366
-6	NAS221-11	. SCREW	1		366
	AN960D10	. WASHER	1		366
	2620-02	. NUT, Anchor (NUS) (80539) (interchangeable with NAS684A3)	1		366
-7	NAS221-10	. SCREW	2		366
	AN960D10	. WASHER	2		366
	2620-02	. NUT, Anchor (NUS) (80539) (interchangeable with NAS684A3)	2		366
-8	NAS221-10	. SCREW (RH door only)	1		366
	AN960D10	. WASHER (RH door only)	1		366
	2620-02	. NUT, Anchor (NUS) (80539) (interchangeable with NAS684A3)	1		366
-9	NAS221-9	. SCREW	8		366
	AN960D10	. WASHER	8		366
	3600-2-02	. NUT, Anchor (NUS) (80539)	8		366
-10	NAS221-9	. SCREW (RH door only)	1		366
	AN960D10	. WASHER (RH door only)	1		366
	3600-2-02	. NUT, Anchor (NUS) (80539) (RH door only)	1		366
-11	AN509-10R8	. SCREW (LH door only)	2		
	AN373F1032	. NUT, Anchor (LH door only)	2		
-12	AN509-10R8	. SCREW (LH door only)	1		
	3610-02	. NUT, Anchor (NUS) (80539) (interchangeable with 12LHA407-02 (EN) (72962)	1		366
-13	NAS221-9	. SCREW (LH door only)	3		
	AN960D10	. WASHER (LH door only)	3		
	3600-2-02	. NUT, Anchor (NUS) (80539) (LH door only)	3		
-14	NAS221-11	. SCREW	1		366
	AN960D10	. WASHER	1		366
	2620-02	. NUT, Anchor (NUS) (80539)	1		366
-15	NAS221-10	. SCREW	9		366
	AN960D10	. WASHER	9		366
	2620-02	. NUT, Anchor (NUS) (80539) (interchangeable with NAS684A3)	1		366
-16	NAS221-10	. SCREW	2		366
	AN960D10	. WASHER	2		366
	3610-02	. NUT, Anchor (NUS) (80539)	2		366
-17	NAS221-10	. SCREW	1		366
	AN960D10	. WASHER	1		366
	2620-02	. NUT, Anchor (NUS) (80539)	1		366
-18	194-31015-1	. HINGE ASSEMBLY, Fuselage nose lower door forward LH	1		
	194-31015-2	. HINGE ASSEMBLY, Fuselage nose lower door forward RH	1	BJ	366
-19	194-31015-3	. . ARM, Fuselage nose lower door forward hinge assembly	1		366
	181-31059	. . BUSHING, Fuselage nose door hinge	1		366
-20	NAS221-10	. . SCREW	1		366
	2W1AL-13-14-16	. . WASHER, Plain (NA) (89372)	2		366
	AN749-3-4	. . JUMPER	1		366
	AN365-1032	. . NUT	1		366
-21	AN4-6A	. . BOLT	3		366
	AN960D416L	. . WASHER	6		366
	AN365-428	. . NUT	3		366
-22	AN42-4A	. BOLT	2		366
-23	AN960D10	. WASHER	2		366
	22A217-22-02	. NUT, Anchor (EN) (72962)	2		366
-24	194-31016-1	. HINGE ASSEMBLY, Fuselage nose lower door latch aft LH	1		
	194-31016-2	. HINGE ASSEMBLY, Fuselage nose lower door latch aft RH	1	BJ	366
	ATTACHING PARTS				
-25	NAS221-10	. SCREW	1		366
	AN960D10	. WASHER	1		366
	2620-02	. NUT, Anchor (NUS) (80539)	1		366
-26	NAS221-9	. SCREW	1		366
	AN960D10	. WASHER	1		366
	3600-2-02	. NUT, Anchor (NUS) (80539)	1		366
-27	NAS221-11	. SCREW	1		366
	AN960D10	. WASHER	1		366
	3610-02	. NUT, Anchor (NUS) (80539) (interchangeable with 12LHA407-02 (EN) (72962))	2		366

OXYGEN BOTTLE ACCESS DOOR

FIGURE & INDEX NO.	PART NUMBER	1 2 3 4 5 6 7 NOMENCLATURE	UNITS PER ASSY.	USABLE ON CODE	S/C NO.
35	NAS221-10	. SCREW (aft side of hinge)	3		366
	AN960D10	. WASHER (aft side of hinge)	3		366
	3600-2-02	. NUT, Anchor (NUS) (80539) (aft side of hinge)	3		366
	---*---				
-28	194-31016-3	. . ARM, Fuselage nose lower door latch aft hinge assembly LH	1		
	194-31016-4	. . ARM, Fuselage nose lower door latch aft hinge assembly RH	1	BJ	366
	181-31059	. . BUSHING, Fuselage nose door hinge	1		366
-29	NAS221-10	. SCREW	1		366
	NAS221-11	. SCREW	1		366
	AN960D10	. WASHER	2		366
	2620-02	. NUT, Anchor (NUS) (80539) (interchangeable with NAS684A3)	2		366
-30	194-31093-1	. HANDLE ASSEMBLY, Fuselage nose lower door latch LH	1		
	194-31093-2	. HANDLE ASSEMBLY, Fuselage nose lower door latch RH	1	BJ	366
	181-31022-3	. . BUSHING, Fuselage nose door	2		366
-31	AN393-33	. . PIN	2		366
	2W18-10L	. . WASHER, Flat (NA) (89372)	2		366
-32	181-31018-11	. BELLCRANK ASSEMBLY, Fuselage nose lower door latch LH	1		366
-33	181-31018-3	. . ARM, Fuselage nose lower door latch bellcrank assembly	1		366
-34	181-31018-7	. . SPACER, Fuselage nose lower door latch bellcrank assembly	1		366
-35	AN3-24A	. BOLT	1		366
	4B21S3-200	. BUSHING, Spacer (NA) (89372)	1		366
	NAS43C5-28	. SPACER	2		366
	AN960D10L	. WASHER	1		366
	AN366F1032	. NUT PLATE	1		366
-36	181-31019-1	. CATCH, Fuselage nose lower door latch LH	1		
	181-31019-2	. CATCH, Fuselage nose lower door latch RH	1	BJ	366
-37	AN393-69	. PIN	1		366
-38	AN960D10L	. WASHER	1		366
	AN960D10	. WASHER	1		366
-39	NAS43C3-31	. SPACER	2		366
-40	NAS43C3-56	. SPACER	1		366
-41	181-31096	. SPRING	1		366
-42	194-31133	. ROD ASSEMBLY, Fuselage nose lower door forward control	1		366
-43	194-31133-3	. . ROD, Fuselage nose enclosure door forward control rod assembly	1		366
-44	AN486-4	. . CLEVIS	2		366
-45	AN316-4R	. . NUT	2		366
-46	AN393-13	. PIN	4		366
	AN960D10	. WASHER	4		366
-47	181-31020	. PLUNGER, Fuselage nose lower door locking	1		366
-48	181-31023-1	. BLOCK ASSEMBLY, Fuselage nose lower door forward bearing LH	1		
	181-31023-2	. BLOCK ASSEMBLY, Fuselage nose lower door forward bearing RH	1	BJ	366
-49	4B19-B6-106	. . BUSHING, Press-fit plain (NA) (89372)	1		366
	181-31023-3	. . BLOCK, Fuselage nose lower door forward bearing block assembly LH	1		366
	181-31023-4	. . BLOCK, Fuselage nose lower door forward bearing block assembly RH	1		366
-50	AN509-10R25	. SCREW	2		366
-51	AN960D10	. WASHER	2		366
-52	AN365-1032	. NUT	2		366
-53	181-31014	. ROD ASSEMBLY, Fuselage nose lower door aft control	1		366
-54	181-31014-3	. . ROD, Fuselage nose lower door aft control rod assembly	1		366
-55	AN486-4	. . CLEVIS	2		366
-56	AN316-4R	. . NUT	2		366
-57	181-31024	. SUPPORT ASSEMBLY, Fuselage nose lower door aft bearing	2		366
-58	181-31140	. . BUSHING, Fuselage nose lower door station 53	2		366
-59	194-31140-3	CABLE ASSEMBLY, Fuselage lower access door support (LH door)	2		
	194-31140-3	CABLE ASSEMBLY, Fuselage lower access door support (RH door)	2	BJ	366
-60	194-31140-7	. CABLE, Fuselage lower access door support cable assembly	1		366
-61	RA2500-3	. YOKE, Stamped 1/16 cable (ACA) (01976)	2		366
-62	AN664C3	. TERMINAL	2		366
-63	194-31140-11	CABLE ASSEMBLY, Fuselage lower access door support (LH door)	1		
	194-31140-11	CABLE ASSEMBLY, Fuselage lower access door support (RH door)	1	BJ	366
-64	194-31140-13	. CABLE, Fuselage lower access door support cable assembly	1		366
-65	AN665-21L	. TERMINAL	1		366
-66	AN669S3L	. TERMINAL	1		366
-67	AN664C3	. TERMINAL	1		366
-68	RA2500-3	. YOKE, Stamped 1/16 cable (ACA) (01976)	1		366
-69	194-31140-5	CABLE ASSEMBLY, Fuselage lower access door support (LH door)	1		
	194-31140-5	CABLE ASSEMBLY, Fuselage lower access door support (RH door)	1	BJ	366
-70	194-31140-9	. CABLE, Fuselage lower access door support cable assembly	1		366
-71	RA2500-3	. YOKE, Stamped 1/16 cable (ACA) (01976)	2		366
-72	AN664C3	. TERMINAL	2		366
-73	140-31049-3	SPRING, Tension (LH door)	2		
	140-31049-3	SPRING, Tension (RH door)	2	BJ	366
-74	140-31030-3	HOOK, Ammunition access door cable spring (LH door)	2		
	140-31030-3	HOOK, Ammunition access door cable spring (RH door)	2	BJ	366
-75	AN393-9	PIN (LH door)	3		
	AN393-9	PIN (RH door)	3	BJ	366
-76	2W18-10M	WASHER, Flat (NA) (89372) (LH door)	6		
	2W18-10M	WASHER, Flat (NA) (89372) (RH door)	6	BJ	366
-77	AN393-11	PIN (LH door)	3		
	AN393-11	PIN (RH door)	3	BJ	366
-78	181-31164-5	FITTING ASSEMBLY, Fuselage station 27.25 lower door latch (LH door)	1		
	181-31164-5	FITTING ASSEMBLY, Fuselage station 27.25 lower door latch (RH door)	1	BJ	366

OXYGEN BOTTLE ACCESS DOOR

FIGURE & INDEX NO.	PART NUMBER	1 2 3 4 5 6 7 NOMENCLATURE	UNITS PER ASSY.	USABLE ON CODE	S/C NO.
35		ATTACHING PARTS			
-79	AN365-428	NUT	2		366
	2W18-416	WASHER, Flat (NA) (89372)	2		366
	2W13-4	WASHER, Serrated (NA) (89372)	2		366
	AN4-7A	BOLT	2		366
		---*---			
-80	4B19-B6-022	. BUSHING, Press fit plain (NA) (89372)	1		366
-81	181-31165	BRACKET ASSEMBLY, Fuselage station 53 lower door (LH door)	1		
	181-31165	BRACKET ASSEMBLY, Fuselage station 53 lower door (RH door)	1	BJ	366
		ATTACHING PARTS			
-82	AN4-7A	BOLT	2		366
	2W13-4	WASHER, Serrated (NA) (89372)	2		366
	2W18-416	WASHER, Flat (NA) (89372)	2		366
	AN365-428	NUT	2		366
		---*---			
-83	181-31140	. BUSHING, Fuselage nose lower door station 53	1		366
-84	AN42-5A	BOLT (LH door)	1		
	AN42-5A	BOLT (RH door)	1	BJ	366
-85	AN960D10	WASHER (LH door)	2		
	AN960D10	WASHER (RH door)	2	BJ	366
-86	AN365-1032	NUT (LH door)	2		
	AN365-1032	NUT (RH door)	2	BJ	366
-87	AN42-4A	BOLT (LH door)	1		
	AN42-4A	BOLT (RH door)	1	BJ	366
-88	AN960D10L	WASHER (LH door)	1		
	AN960D10L	WASHER (RH door)	1	BJ	366

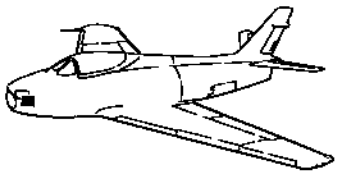

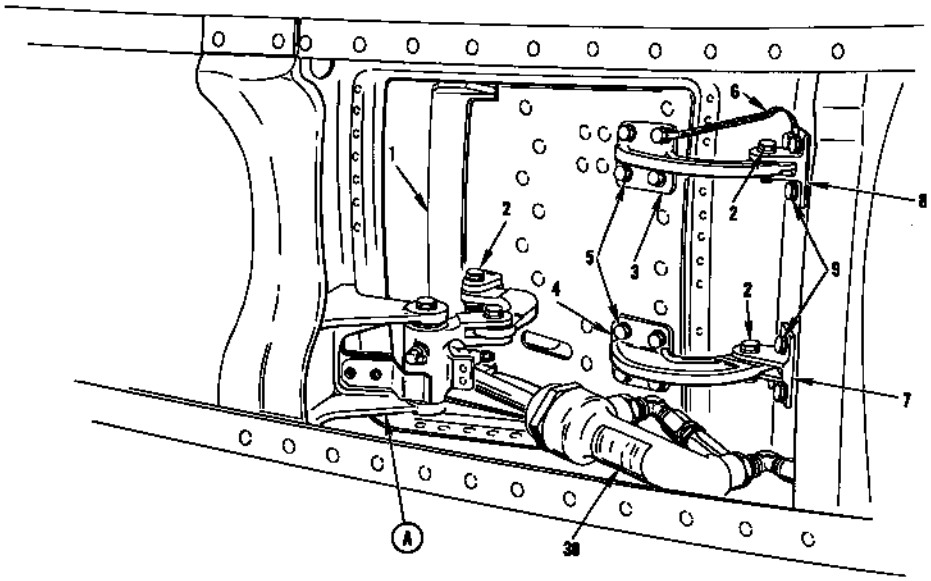

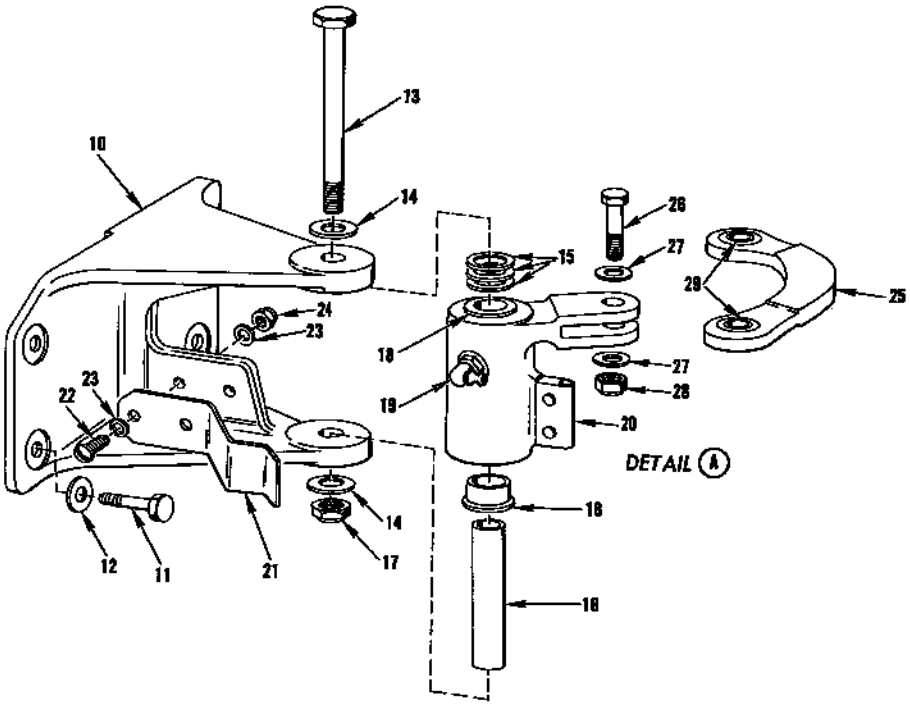

FJ-4-4-53-1A

FIGURE 36 - GUN BAY AIR PURGE DOOR

FRAME ASSEMBLY (FUS STA 0 TO 53)

FIGURE & INDEX NO.	PART NUMBER	1 2 3 4 5 6 7 NOMENCLATURE	UNITS PER ASSY.	USABLE ON CODE	S/C NO.
37-1	194-31112-201	FRAME ASSEMBLY, Fuselage station 0 to station 53	1	BH	357, 366, 368
	194-31112-701	FRAME ASSEMBLY, Fuselage station 0 to station 53	1	CZ	366
	194-31112-161	FRAME ASSEMBLY, Fuselage station 0 to station 53	1	GE	366
	194-31112-151	FRAME ASSEMBLY, Fuselage station 0 to station 53	1	GN	366
	194-31112-761	FRAME ASSEMBLY, Fuselage station 0 to station 53	1	FX	366
	194-31112-801	FRAME ASSEMBLY, Fuselage station 0 to station 53	1	MD	368
	194-31112-771	FRAME ASSEMBLY, Fuselage station 0 to station 53	1	ME	366
-2	181-31117-2	. LONGERON ASSEMBLY, Fuselage station 15 to station 53 upper RH	1		
	181-31117-4	. . LONGERON, Fuselage station 15 to station 53 upper RH longeron assy	1		
-3	181-31119-6	. . FITTING ASSEMBLY, Fuselage station 53 upper longeron forward RH	1		
	181-31139	. . . BUSHING, Fuselage upper longeron station 53 forward fitting	1		
-4	181-31115-301	. DUCT ASSEMBLY, Fuselage station 15 to station 53 upper half	1	ET	
	181-31115-501	. DUCT ASSEMBLY, Fuselage station 15 to station 53 upper half	1	FR	
	194-31116-101	. DUCT ASSEMBLY, Fuselage station 15 to station 53 lower	1	BJ	366
	194-31116-151	. DUCT ASSEMBLY, Fuselage station 15 to station 53 lower	1		
-5	181-31117-1	. LONGERON ASSEMBLY, Fuselage station 15 to station 53 upper longeron forward LH	1		
	181-31117-3	. . LONGERON, Fuselage station 53 upper longeron forward LH longeron assembly	1		
-6	181-31119-5	. . FITTING ASSEMBLY, Fuselage station 53 upper longeron forward LH	1		
	181-31139	. . . BUSHING, Fuselage upper longeron station 53 forward fitting	1		
-7	194-31123-51	. WEB ASSEMBLY, Fuselage lower longeron to duct	1	BJ	357, 366
	194-31123-151	. WEB ASSEMBLY, Fuselage lower longeron to duct	1	EF	357
	194-31123-201	. WEB ASSEMBLY, Fuselage lower longeron to duct left	1	BS	
-8	181-31118-51	. . LONGERON, Fuselage station 15 to station 53 lower LH	1		
-9	181-31120-3	. . FITTING, Fuselage station 53 lower longeron forward LH	1		
-10	194-31110-1	. STRINGER ASSEMBLY, Fuselage station 15 to station 53 lower LH	1		
	194-31110-4	. STRINGER ASSEMBLY, Fuselage station 15 to station 53 lower RH	1	BJ	366
-11	181-31104-3	. . FITTING, Fuselage station 53 lower LH forward	1		366
	209-31135	. STRINGER, Fuselage station 15 to station 27.25 lower	1	BK	
-12	17267	. CLAMP ASSEMBLY (MAR) (98625)	1		357
	ATTACHING PARTS				
	AN3-3A	. BOLT	2		357
	2W18-10	. WASHER, Flat (NA) (89372)	2		357
	2W18-10L	. WASHER, Flat (NA) (89372) (use under bolthead)	2		357
	AN365-1032	. NUT	2		357
	AN3-5A	. BOLT	2		
	2W18-10L	. WASHER, Flat (NA) (89372)	2		
	AN365-1032	. NUT	2		
	---*---				
-13	194-31194	. INTERCOSTAL ASSEMBLY, Fuselage station 33.625 to station 42.188 lower	1		
-14	4B20M-S14-010	. . BUSHING, Press fit flanged (NA) (89372)	1		
-15	209-73358	. FITTING, Oxygen system liquid overboard vent skin attachment	1	BS	
-16	209-31114	. FAIRING ASSEMBLY, Fuselage station 0 to station 15 nose complete (see figure 33 for additional breakdown)	1	Y	
	209-31114-101	. FAIRING ASSEMBLY, Fuselage station 0 to station 15 nose complete (see figure 33 for additional breakdown)	1	FS	
	209-31114-151	. FAIRING ASSEMBLY, Fuselage station 0 to station 15 nose complete (see figure 33 for additional breakdown)	1	FR	
-17	209-31118	. . SUPPORT ASSEMBLY, Lower fuselage nose approach light	1		
-18	AN509-10R10	. . SCREW	3		
	3600-02	. . NUT, Anchor (NUS) (80539)	1		
	22A217-22-02	. . NUT PLATE (EN) (72962)	2		
-19	194-31124-101	. WEB ASSEMBLY, Fuselage lower longeron to duct right RH	1	BJ	366
	194-31124-151	. WEB ASSEMBLY, Fuselage lower longeron to duct right RH	1	NZ	
	194-31124-161	. WEB ASSEMBLY, Fuselage lower longeron to duct right RH	1	ME	
-20	181-31118-52	. . LONGERON, Fuselage station 15 to station 53 lower	1		
	181-31120-4	. . FITTING, Fuselage station 53 lower longeron forward RH	1		

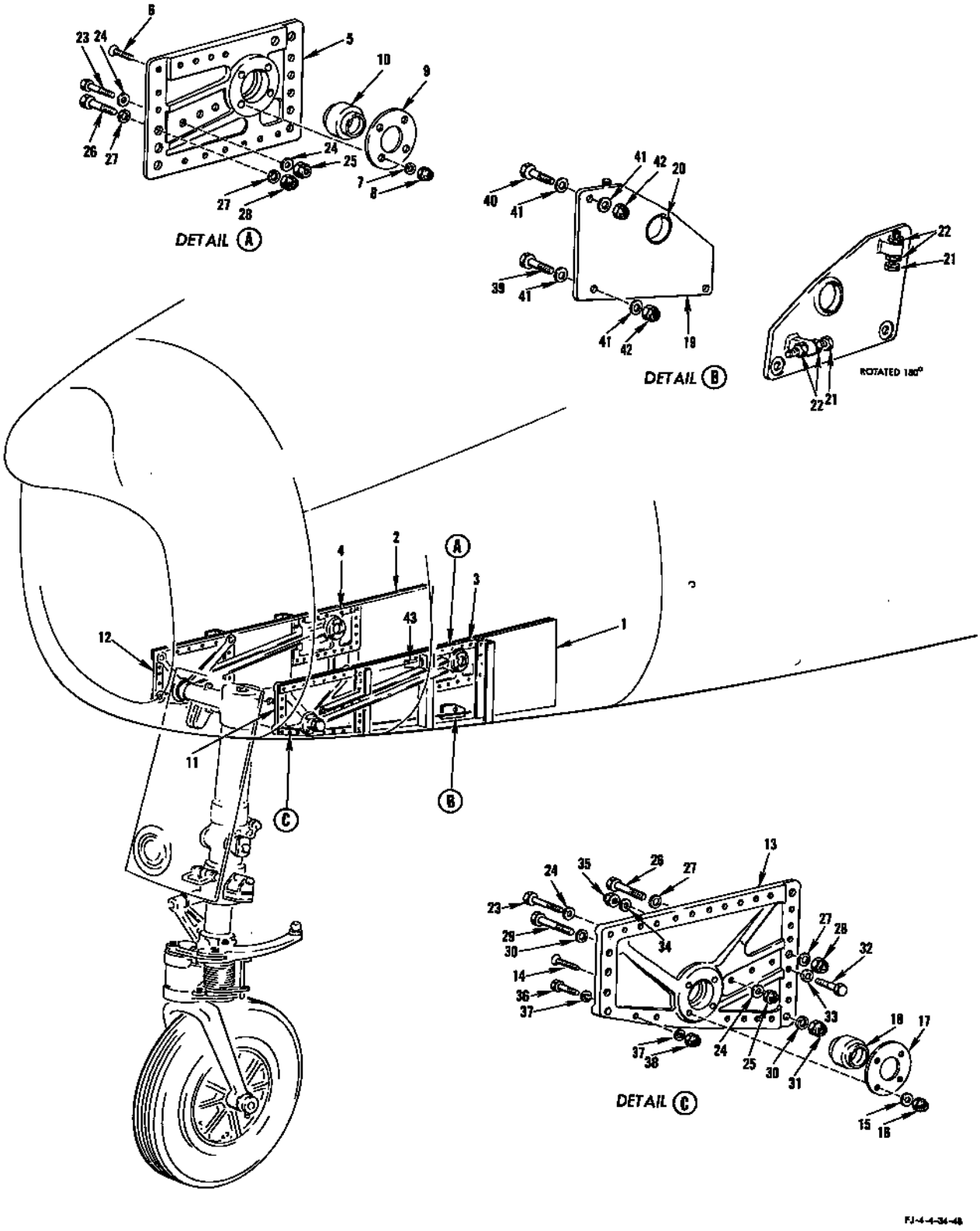

FIGURE 38 - NOSE LANDING GEAR TRUNNION FITTINGS

NOSE LANDING GEAR TRUNNION FITTINGS

FIGURE & INDEX NO.	PART NUMBER	1 2 3 4 5 6 7 NOMENCLATURE	UNITS PER ASSY.	USABLE ON CODE	S/C NO.
38-1	194-31151	BEAM ASSEMBLY, Fuselage station 15 to station 53 LH wheel well	1	Y	
	194-31151-101	BEAM ASSEMBLY, Fuselage station 15 to station 53 LH wheel well	1	Z	
-2	194-31152-51	BEAM ASSEMBLY, Fuselage station 15 to station 53 RH wheel well	1	BJ	366
	194-31152-151	BEAM ASSEMBLY, Fuselage station 15 to station 53 RH wheel well	1	BK	
-3	181-34131-5	. FITTING ASSEMBLY, Nose landing gear drag brace trunnion LH	1		
-4	181-34132-5	. FITTING ASSEMBLY, Nose landing gear drag brace trunnion RH	1		
-5	181-34131-3	. . FITTING, Nose landing gear drag brace trunnion LH fitting assembly	1		
	181-34132-3	. . FITTING, Nose landing gear drag brace trunnion RH fitting assembly	1		
-6	AN509-10R19	. . SCREW	4		
-7	2W18-10	. . WASHER, Flat (NA) (89372)	4		
-8	AN365-1032	. . NUT	4		
-9	181-34123	. . RETAINER, Nose landing gear LH trunnion bearing	1		
-10	120-33144	. . BEARING ASSEMBLY, Nose landing gear side brace outboard pivot LH	1		
	142-33139	. . BEARING ASSEMBLY, Nose landing gear side brace lower RH	1		
-11	181-34121-5	. FITTING ASSEMBLY, Nose landing gear LH trunnion	1		
-12	181-34122-5	. FITTING ASSEMBLY, Nose landing gear RH trunnion	1		
-13	181-34121-3	. . FITTING, Nose landing gear LH trunnion fitting assembly	1		
	181-34122-3	. . FITTING, Nose landing gear RH trunnion fitting assembly	1		
-14	AN509-10R19	. . SCREW	4		
-15	2W18-10	. . WASHER, Flat (NA) (89372) (LH side)	4		
	AN960D10	. . WASHER (RH side)	4		
-16	AN365-1032	. . NUT	4		
-17	181-34123	. . RETAINER, Nose landing gear LH trunnion bearing	1		
	181-34124	. . RETAINER, Nose landing gear RH trunnion bearing	1		
-18	120-33144	. . BEARING ASSEMBLY, Nose landing gear side brace outboard pivot LH	1		
	142-33139	. . BEARING ASSEMBLY, Nose landing gear side brace lower RH	1		
-19	181-34533	. BRACKET ASSEMBLY, Nose landing gear emergency release support (LH only)	1		
-20	181-34536	. . BUSHING, Nose landing gear emergency release support bracket	1		
-21	NAS428K3-10	. . BOLT	2		
-22	AN315-3	. . NUT	4		
-23	AN4-11A	. BOLT (LH only)	6		
	AN4-7A	. BOLT (RH only)	6		
-24	AN960D416	. WASHER	12		
-25	AN365-428	. NUT	6		
-26	AN5-11A	. BOLT (LH only)	2		
	AN4-7A	. BOLT (RH only)	2		
-27	AN960D516	. WASHER (LH only)	4		
	AN960D416	. WASHER (RH only)	4		
-28	AN365-524	. NUT (LH only)	2		
	AN365-428	. NUT (RH only)	2		
-29	AN5-13A	. BOLT (LH only)	1		
	AN4-13A	. BOLT (RH only)	1		
-30	AN960D516	. WASHER (LH only)	2		
	AN960D416	. WASHER (RH only)	2		
-31	AN365-524	. NUT (LH only)	1		
	AN365-428	. NUT (RH only)	1		
-32	AN3-6A	. BOLT (RH only)	1		
-33	2W18-10M	. WASHER (NA) (89372)(RH only)	1		
-34	2W18-10	. WASHER (NA) (89372)(RH only)	1		
-35	AN365-1032	. NUT (RH only)	1		
-36	AN4-10A	. BOLT (LH only)	6		
-37	AN960D416	. WASHER (LH only)	12		
-38	AN365-428	. NUT (LH only)	6		
-39	AN3-7A	. BOLT (LH only)	2		
-40	AN3-6A	. BOLT (LH only)	1		
-41	AN960D10L	. WASHER (LH only)	6		
-42	AN365-1032	. NUT (LH only)	3		
-43	181-31106-3	. FITTING, Fuselage station 53 nose wheel well lower RH	1	BJ	366
	209-520132	. SUPPORT, Ram air turbine operating bungee lower	1	BK	

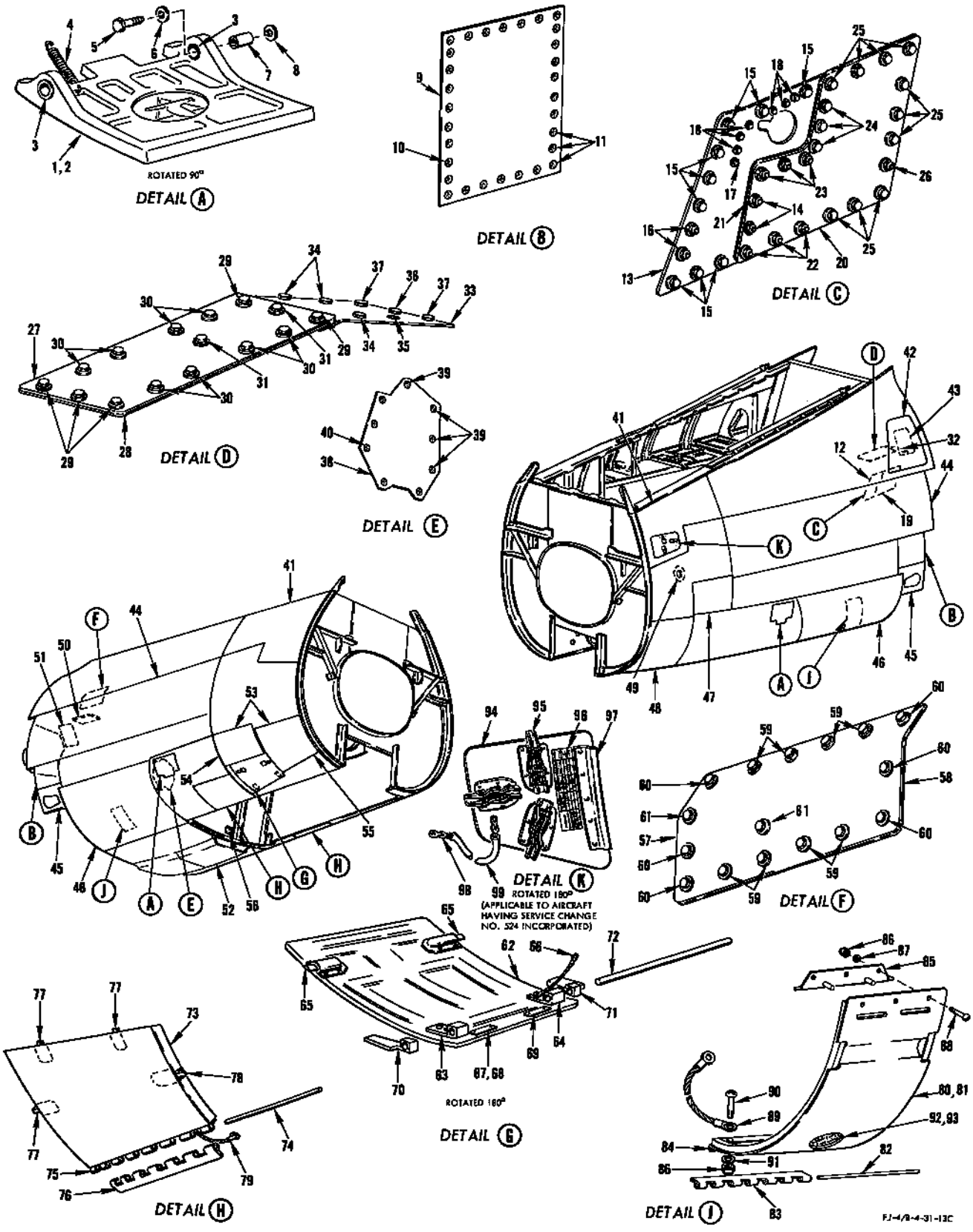

FIGURE 39 - ACCESS DOORS, INSPECTION DOORS AND PANELS (FUS STA 53 TO 131)

ACCESS DOORS, INSPECTION DOORS AND PANELS (FUS STA 53 TO 131)

FIGURE & INDEX NO.	PART NUMBER	1 2 3 4 5 6 7	NOMENCLATURE	UNITS PER ASSY.	USABLE ON CODE	S/C NO.
	ATTACHING PARTS					
39	AN4-6A		BOLT	16		
	6900-048		RETAINER, Bolt (NUS) (80539)	1		
	AN365-428		NUT	1		
	3600-2-048		NUT, Anchor (NUS) (80539)	15		
	AN960D416		WASHER	16		
		---*---				
	181-31378		. GASKET, Fuselage station 124 control access door RH	1		
-52	209-31348		FAIRING ASSEMBLY, Fuselage station 90 to fuselage station 108.156 AN/ARA-25 antenna (see Radio and Radar)	1		
-53	194-31019	*1	DOOR ASSEMBLY, Fuselage station 53 to station 71.75 gun charger RH	1	ET	
	ATTACHING PARTS					
	AN509-10R7		SCREW	65		
	3600-02		NUT, Anchor (NUS) (80539)	46		
	22NA5-02		NUT, Anchor (EN) (72962)	8		
		---*---				
	194-31205	*1	CLIP, Fuselage station 62.625 lower longeron RH	1		
-54	194-31019-31	*1	DOOR ASSEMBLY, Fuselage station 53 to station 71.75 gun charger RH	1	FR	
	ATTACHING PARTS					
	AN509-10R7		SCREW	22		
	3600-02		NUT, Anchor (NUS) (80539)	22		
		---*---				
	209-31248	*1	SUPPORT ANGLE, Fuselage station 62.625 door	1		
-55	194-31019-41	*1	DOOR ASSEMBLY, Fuselage station 53 to station 71.75 gun charger RH	1	FR	
	ATTACHING PARTS					
	AN509-10R7		SCREW	38		
	3600-02		NUT, Anchor (NUS) (80539)	32		
	22NA5-02		NUT, Anchor (EN) (72962)	6		
		---*---				
-56	209-51155		COVER, Labs disconnect No. 39 station 90.5 LH provisions for	1		
	ATTACHING PARTS					
	AN509-6R8		SCREW	4		
	2W18-6L		WASHER, Flat (NA) (89372)	8		
	AN365-632		NUT	4		
		---*---				
-57	209-31229		COVER ASSEMBLY, Fuselage station 117 to station 126 control press box removable	1		
-58	209-31230		. GASKET, Fuselage station 117 to station 126 control press box cover	1		
-59	AN3-5A		BOLT	8		
	2W18-10		WASHER, Flat (NA) (89372)	8		
	3600-02		NUT, Anchor (NUS) (80539)	4		
	3600-2-02		NUT, Anchor (NUS) (80539)	4		
-60	AN3-5A		BOLT	6		
	2W18-10L		WASHER, Flat (NA) (89372)	6		
	3600-2-02		NUT, Anchor (NUS) (80539)	6		
-61	AN3-4A		BOLT	2		
	2W18-10L		WASHER, Flat (NA) (89372)	2		
	3600-2-02		NUT, Anchor (NUS) (80539)	2		
-62	194-31012-50		DOOR ASSEMBLY, Fuselage station 62.625 to station 71.75 gun charger access RH	1	AD	
	194-31012-101		DOOR ASSEMBLY, Fuselage station 62.625 to station 71.75 gun charger access RH	1	EK	
-63	181-312203-2		. HINGE, Fuselage station 62.625 to station 71.75 gun charger access RH	1		
-64	181-312203-1		. HINGE, Fuselage station 62.625 to station 71.75 gun charger access LH	1		
-65	H-5000-064-125		. FLUSH LATCH ASSEMBLY, Torsion spring (HWL) (83014)	2		
-66	AN749-3-3		. JUMPER	1		
	ATTACHING PARTS					
	AN509-10R10		. SCREW	1		
	AN365-1032		. NUT	1		
		---*---				
-67	194-59209-5		. NAMEPLATE, Pneumatic pressure gage	1	AZ	
-68	194-59209-7		. NAMEPLATE, Pneumatic pressure gage	1	BA	
-69	194-59209-3		. NAMEPLATE, Pneumatic pressure gage	1	AZ	
-70	181-312201-2		HINGE, Fuselage station 71.75 gun charger access door RH	1		
-71	181-312201-1		HINGE, Fuselage station 71.75 gun charger access door LH	1		
-72	209-31211-81		PIN, Fuselage assembly station 53 to station 131	1		
-73	194-31020		DOOR ASSEMBLY, Fuselage station 71.75 to station 81.296 case and link RH	1		
	194-31021		DOOR ASSEMBLY, Fuselage station 71.75 to station 81.296 case and link LH	1		
-74	AN253-4-761		. PIN (RH door only)	1		
	AN253-4-763		. PIN (LH door only)	1		
-75	194-31020-13		. HINGE, Fuselage station 71.75 to station 81.296 case and link RH	1		
	194-31021-17		. HINGE, Fuselage station 71.75 to station 81.296 case and link LH	1		
-76	194-31020-17		. HINGE, Fuselage station 71.75 to station 81.296 case and link RH	1		
	194-31021-15		. HINGE, Fuselage station 71.75 to station 81.296 case and link LH	1		
-77	H-5000-064-115		. FLUSH LATCH ASSEMBLY, Torsion spring (HWL) (83014)	3		
-78	H-5000-064-096		. FLUSH LATCH ASSEMBLY, Torsion spring (HWL) (83014)	1		
-79	AN749-3-4		. JUMPER	1		
	ATTACHING PARTS					
	NAS221-10		. SCREW	1		
	3600-2-02		. NUT, Anchor (NUS) (80539)	1		
	AN509-10R10		. SCREW	1		
	2W18D10L		. WASHER, Flat (NA) (89372)	1		
	AN365-1032		. NUT	1		
		---*---				

ACCESS DOORS, INSPECTION DOORS AND PANELS (FUS STA 53 TO 131)

FIGURE & INDEX NO.	PART NUMBER	1 2 3 4 5 6 7 NOMENCLATURE	UNITS PER ASSY.	USABLE ON CODE	S/C NO.
39-80	209-31050	DOOR ASSEMBLY, Fuselage station 99.125 to station 106.875 case (superseded by 209-31074 together with 209-31246 for future procurement)	2		
-81	209-31074	DOOR, Fuselage station 99.125 to fuselage station 106.875 case and link assembly of (209-31074 together with 209-31246 supersedes 209-31050 for future procurement)	2		
-82	AN253-2-700	. PIN	1		
-83	209-31074-5	. HALF HINGE, Fuselage station 99.125 to station 106.875 case and link door	1		
	209-31050-17	. HALF HINGE, Fuselage station 99.125 to fuselage station 106.875 case door assembly	1		
-84	209-31074-7	. HALF HINGE, Fuselage station 99.125 to station 106.875 case and link door	1		
	209-31050-15	. HALF HINGE, Fuselage station 99.125 to station 106.875 case door assembly	1		
	ATTACHING PARTS				
	NAS221-10	. SCREW (used on 209-31074-7 only)	2		
	2W18-10L	. WASHER, Flat (NA) (89372) (used on 209-31074-7 only)	2		
	AN365-1032	. NUT (used on 209-31074 only)	2		
	---*---				
-85	69-0101-2	. LATCH ASSEMBLY (MAFN) (91927)	1		
-86	AN365-1032	. NUT	4		
-87	2W18-10	. WASHER, Flat (NA) (89372)	3		
-88	AN520-10R9	. SCREW	3		
-89	AN749-3-3	. JUMPER	1		
-90	NAS221-8	. SCREW (used on 209-31074 door)	1		
	NAS211-8	. SCREW (used on 209-31050 door)	1		
-91	2W18-10M	. WASHER, Flat (NA) (89372)	1		
-92	209-31050-13	. DOOR SUBASSEMBLY, Fuselage station 99.125 to station 106.875 case (used on 209-31050 door)	1		
	209-31050-21	. . SCREEN, Fuselage station 99.125 to station 106.875 case door subassembly	1		
	209-31050-19	. . RETAINER, Fuselage station 99.125 to station 106.875 case door subassembly	1		
-93	209-31074-15	. DOOR SUBASSEMBLY, Fuselage station 99.125 to fuselage station 106.875 case and link (used on 209-31074 door)	2		
	209-31074-11	. . SCREEN, Fuselage station 99.125 to station 106.675 case and link subassembly	1		
	209-31074-9	. . RETAINER, Fuselage station 99.125 to station 106.875 case and link subassembly	1		
-94	244-31224	*2 DOOR ASSEMBLY, External stores access (fuselage station 54.562 to station 61.156)	1	FR	
	244-31224-5	*2 . DOOR, External stores access door assembly	1	FR	
-95	H5000-040-125	*2 . LATCH (HWL) (83014)	3	FR	
-96	244-54082	*2 . DECAL, Electrical disconnect changeover diagram	1	FR	
-97	244-31224-3	*2 . RETAINER, External stores access door assembly	1	FR	
-98	9C1-2-8	*2 . CHAIN, Safety (NA) (89372)	1	FR	
-99	10C2B12-6	*2 . CONDUIT (NA) (89372)	1	FR	

NOTE: *1 194-31019 together with 194-31205 is superseded by 194-31019-31 and 194-31019-41 together with 209-31248 for future procurement
*2 Added by aircraft Service Change No. 524

AMMO BAY DOOR ASSY (FUS STA 90.5 TO 116-125)

FIGURE & INDEX NO.	PART NUMBER	1	2	3	4	5	6	7	NOMENCLATURE	UNITS PER ASSY.	USABLE ON CODE	S/C NO.
42-52	2W18-10L	.	.	WASHER, Flat (NA) (89372)						2		
-53	2W18-10	.	WASHER, Flat (NA) (89372)							2		
-54	NAS43-5-28	.	SPACER							2		
-55	4B21-53-200	.	BUSHING, Spacer (NA) (89372)							1		
-56	AN3-25A	.	BOLT							1		
	3600-02	.	NUT ANCHOR (NUS) (80539)							1		
-57	181-31096	.	SPRING, Tension							1		
-58	181-31018-11	.	BELLCRANK ASSEMBLY, Fuselage nose lower door latch							1		
-59	181-31018-3	.	.	ARM, Fuselage nose lower door latch bellcrank assembly						1		
-60	181-31018-5	.	.	TUBE, Fuselage nose lower door latch bellcrank assembly						1		
-61	2W18-10L	.	WASHER, Flat (NA) (89372)							1		
-62	AN393-13	.	PIN							1		
-63	209-31092-1	.	ROD ASSEMBLY, Ammunition door latch actuating							1		
-64	209-31092-3	.	.	ROD, Ammunition door latch actuating rod assembly						1		
-65	AN486-4	.	.	CLEVIS						1		
-66	209-31091	.	ROD, Ammunition door latch actuating clevis							1		
-67	2W18-10L	.	WASHER, Flat (NA) (89372)							1		
-68	AN393-19	.	PIN							1		
-69	209-31093	.	BELLCRANK, Ammunition door latch actuating							1		
-70	2W18-10L	.	WASHER, Flat (NA) (89372)							1		
-71	AN393-25	.	PIN							1		
-72	209-31022-71	.	CLIP, Fuselage station 90.5 to station 116.125 ammunition bay door assembly							1		
-73	209-31022-72	.	CLIP, Fuselage station 90.5 to station 116.125 ammunition bay door assembly							1		
-74	181-31020	.	PLUNGER, Fuselage nose lower door locking							1		
-75	2W18-10L	.	WASHER, Flat (NA) (89372)							1		
-76	AN393-13	.	PIN							1		
-77	209-31094	.	GUIDE, Fuselage ammunition door latch pin aft							1		
-78	AN365-1032	.	NUT							2		
-79	2W18-10L	.	WASHER, Flat (NA) (89372)							2		
-80	AN509-10-15	.	SCREW							2		
-81	181-31331	PLATE, Fuselage ammunition door latch								2		
-82	209-31331	PLATE, Fuselage ammunition door latch								2		
-83	181-312187	SHIM, Fuselage station 90.5 ammunition door latch								2		
-84	209-31332	SHIM, Fuselage station 116.125 ammunition door latch								2		
-85	181-312211	BOLT, Fuselage station 90.5 and 116.125 ammunition door latch attaching								4		
	AN366F524	NUT-PLATE								4		
-86	181-312211	BOLT, Fuselage station 90.5 and 116.125 ammunition door latch attaching								2		
	22NA5A-054	NUT ANCHOR (EN) (72962)								2		
-87	181-312211-11	BOLT, Fuselage ammunition door latch attaching								2		
	AN366F524	NUT-PLATE								2		
-88	2W2SP21-24-62	WASHER, Thrust (NA) (89372)								8		
-89	AN3-5A	BOLT								4		
	3600-02	NUT ANCHOR (NUS) (80539)								2		
-90	2W18-10	WASHER, Flat (NA) (89372)								4		
-91	NAS43-3-6	SPACER								4		

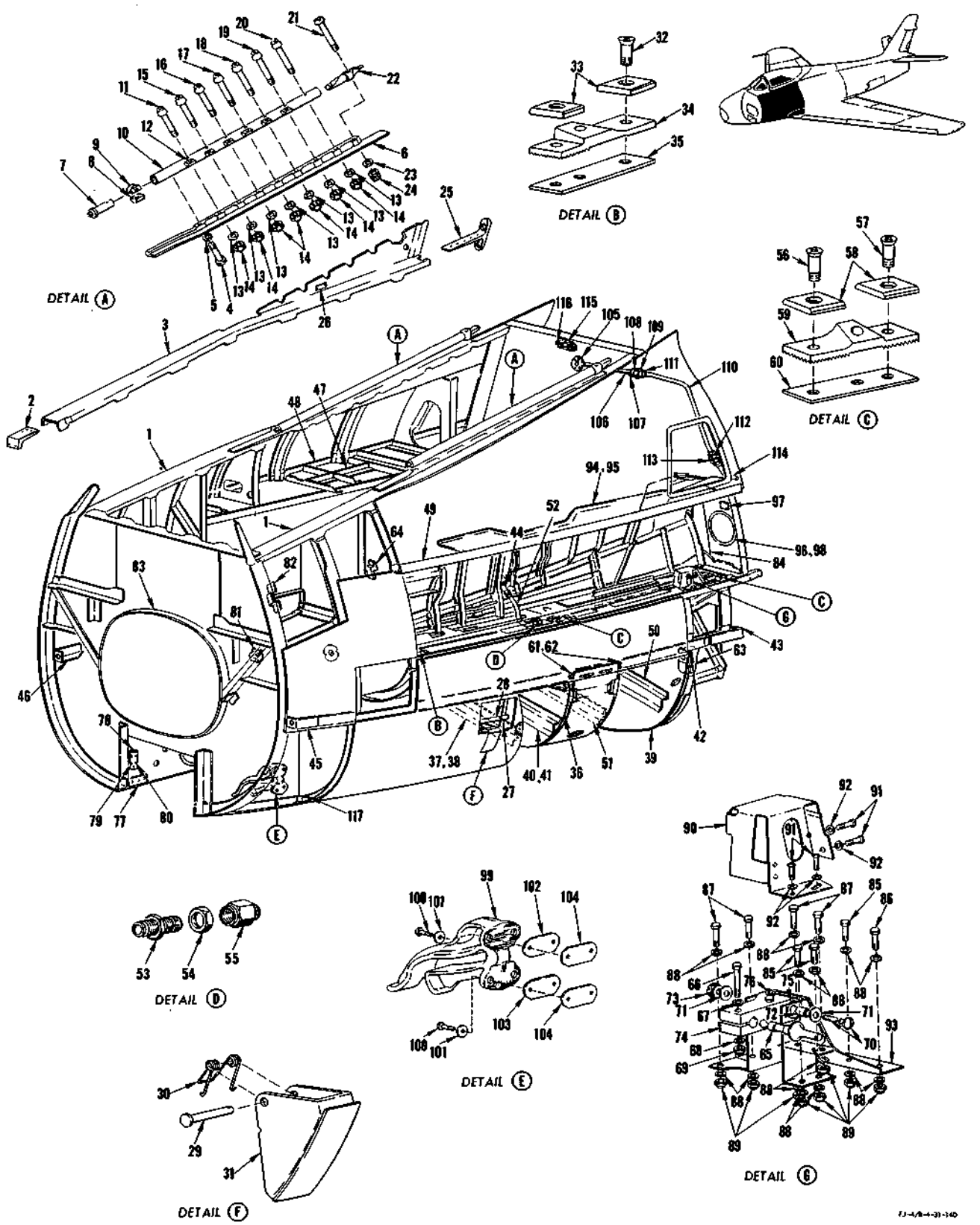

FIGURE 43 - FRAME ASSEMBLY (FUS STA 53 TO 131)

FRAME ASSEMBLY (FUS STA 53 TO 131)

FIGURE & INDEX NO.	PART NUMBER	1 2 3 4 5 6 7 NOMENCLATURE	UNITS PER ASSY.	USABLE ON CODE	S/C NO.
43	209-31212	FRAME ASSEMBLY, Fuselage station 53 to station 131	1	AD	462
	209-31212-101	FRAME ASSEMBLY, Fuselage station 53 to station 131	1	GT	462
	209-31212-151	FRAME ASSEMBLY, Fuselage station 53 to station 131	1	GN	462
	209-31212-161	FRAME ASSEMBLY, Fuselage station 53 to station 131	1	GZ	462
	209-31212-171	FRAME ASSEMBLY, Fuselage station 53 to station 131	1	GB	
	209-31212-181	FRAME ASSEMBLY, Fuselage station 53 to station 131	1	GU	462
	209-31212-191	FRAME ASSEMBLY, Fuselage station 53 to station 131	1	GV	
	209-31212-201	FRAME ASSEMBLY, Fuselage station 53 to station 131	1	CZ	462
	209-31212-251	FRAME ASSEMBLY, Fuselage station 53 to station 131	1	FR	462
	209-31212-301	FRAME ASSEMBLY, Fuselage station 53 to station 131	1	GW	462
	209-31212-401	FRAME ASSEMBLY, Fuselage station 53 to station 131	1	GX	462
	209-31212-501	FRAME ASSEMBLY, Fuselage station 53 to station 131	1	GY	462
-1	209-31217-1	. LONGERON ASSEMBLY, Fuselage station 53 to station 120.346 upper LH	1		
	209-31217-2	. LONGERON ASSEMBLY, Fuselage station 53 to station 120.346 upper RH	1		
-2	181-31219-1	. . FITTING, Fuselage station 53 upper longeron aft LH	1		
	181-31219-2	. . FITTING, Fuselage station 53 upper longeron aft RH	1		
-3	209-31227-1	. . LONGERON, Fuselage station 53 to station 120.346 upper LH	1		
	209-31227-2	. . LONGERON, Fuselage station 53 to station 120.346 upper RH	1		
-4	AN4-13A	. . BOLT	1		
-5	AN960D416L	. . WASHER	1		
-6	209-31810-1	. . TRACK SUPPORT, Cockpit enclosure LH (forward)	1		
	209-31810-2	. . TRACK SUPPORT, Cockpit enclosure RH (forward)	1		
-7	181-318129	. . PLUG, Cockpit enclosure canopy track forward	1		
-8	S-1452-048	. . NUT, Barrel (EN) (72962)	1		
-9	98477	. . RETAINER, Barrel nut (UC) (61864)	1		
-10	209-31809	. . TRACK, Cockpit enclosure (forward)	1		
-11	NAS144-23	. . BOLT	1		
-12	181-318127	. . SPACER, Cockpit enclosure canopy track attachment	6		
-13	2W18-416M	. . WASHER, Flat (NA) (89372)	7		
-14	AN365-428	. . NUT	7		
-15	NAS144-24	. . BOLT	1		
-16	NAS144-25	. . BOLT	1		
-17	NAS144-26	. . BOLT	1		
-18	NAS144-27	. . BOLT	1		
-19	NAS144-28	. . BOLT	1		
-20	NAS144-29	. . BOLT	1		
-21	209-31210	. . BOLT, Cockpit enclosure canopy rear latch	1		
-22	209-31833	. . PLUG, Cockpit enclosure canopy rear latch	1		
-23	NAS143-5	. . WASHER	1		
-24	EB-054	. . NUT, High tensile (EN) (72962)	1		
-25	181-31221-1	. . FITTING, Fuselage station 120.34 upper longeron forward LH	1		
	181-31221-2	. . FITTING, Fuselage station 120.34 upper longeron forward RH	1		
-26	181-53520	. . NAMEPLATE, Heat and vent system cockpit air control	1		
-27	194-31229-101	. BOX ASSEMBLY, Fuselage station 85 pilots entrance step LH	1		
	194-31229-201	. BOX ASSEMBLY, Fuselage station 85 pilots entrance step RH	1		
-28	AN4-67A	. . BOLT	1		
	NAS43-4-395	. . SPACER	1		
	AN960D416	. . WASHER	2		
	AN365-428	. . NUT	1		
-29	AN394-47	. . PIN	1		
-30	194-31262	. . SPRING, Fuselage station 85 pilots entrance step latch	1		
-31	194-31230	. . LATCH ASSEMBLY, Fuselage station 85 pilots entrance step	1		
-32	AN509-516R14	. SCREW	4		
	22A5-054	. NUT, Anchor (EN) (72962)	4		
-33	181-312188	. WASHER, Fuselage gun bay door keeper	4		
-34	181-31332-1	. KEEPER, Fuselage gun bay door latch LH	1		
	181-31332-2	. KEEPER, Fuselage gun bay door latch RH	1		
-35	181-31330-5	. PLATE, Fuselage gun bay door latch	2		
-36	209-31290	. BULKHEAD ASSEMBLY, Fuselage station 90.5 canted lower	1	C	
	209-31290-101	. BULKHEAD ASSEMBLY, Fuselage station 90.5 canted lower	1	KW	
	209-31290-201	. BULKHEAD ASSEMBLY, Fuselage station 90.5 canted lower	1	FR	
-37	209-61118-1	. . TRACK ASSEMBLY, 20 mm gun fuselage station 90.5 canted ammunition LH (titanium alloy)	1	C	
	209-61117	. . TRACK ASSEMBLY, 20 mm gun fuselage station 90.5 canted ammunition RH (titanium alloy)	1	C	
	209-61117-5	. . TRACK ASSEMBLY, 20 mm gun fuselage station 90.5 canted ammunition RH (titanium alloy)	1	C	
-38	209-61114-1	. . TRACK ASSEMBLY, Fuselage station 90.5 canted gun ammunition LH (crescent sheet)	1	D	
	209-61115	. . TRACK ASSEMBLY, Fuselage station 90.5 canted gun ammunition RH	1	D	
	209-61115-5	. . TRACK ASSEMBLY, Fuselage station 90.5 canted gun ammunition RH (crescent sheet)	1	D	
-39	209-31299	. BULKHEAD ASSEMBLY, Fuselage station 99.125 lower	1	C	
	209-31299-101	. BULKHEAD ASSEMBLY, Fuselage station 99.125 lower	1	KW	
	209-31299-201	. BULKHEAD ASSEMBLY, Fuselage station 99.125 lower	1	FR	
-40	209-61119-11	. . TRACK ASSEMBLY, 20 mm gun fuselage station 99.125 ammunition LH (titanium alloy)	1	C	
	209-61116-5	. . TRACK ASSEMBLY, 20 mm gun fuselage station 99.125 ammunition RH (titanium alloy)	1	C	
-41	209-61122-1	. . TRACK ASSEMBLY, Fuselage station 99.125 gun ammunition LH (crescent sheet)	1	KW	
	209-61122-11	. . TRACK ASSEMBLY, Fuselage station 99.125 gun ammunition LH (crescent sheet)	1	FR	

FRAME ASSEMBLY (FUS STA 53 TO 131)

FIGURE & INDEX NO.	PART NUMBER	1	2	3	4	5	6	7	NOMENCLATURE	UNITS PER ASSY.	USABLE ON CODE	S/C NO.
43	209-61122-12	.	.						TRACK ASSEMBLY, Fuselage station 99.125 gun ammunition RH (crescent sheet)	1	FR	
	209-61123-5	.	.						TRACK ASSEMBLY, Fuselage station 99.125 gun ammunition RH (crescent sheet)	1	KW	
-42	209-31218-1	.							LONGERON ASSEMBLY, Fuselage station 53 to station 125.5 lower LH	1		
	209-31218-2	.							LONGERON ASSEMBLY, Fuselage station 53 to station 125.5 lower RH	1		
-43	181-31222-5	.		.					FITTING, Fuselage station 125.5 lower longeron forward LH	1		
	181-31222-6	.		.					FITTING, Fuselage station 125.5 lower longeron forward RH	1		
-44	209-31221	.							FITTING ASSEMBLY, Fuselage station 97 cockpit drain	2		
-45	181-31220-3	.							FITTING ASSEMBLY, Fuselage station 53 lower longeron aft LH	1		
-46	181-31220-4	.							FITTING ASSEMBLY, Fuselage station 53 lower longeron aft RH	1		
-47	209-31240	.							SHELF ASSEMBLY, Fuselage station 71.750 to station 131 RH	1	DN	
	209-31240-101	.							SHELF ASSEMBLY, Fuselage station 71.750 to station 131 RH	1	DP	
-48	181-31241-4	.		.					ANGLE, Fuselage station 71.750 to station 131 wl +2.625 outboard RH	1		
	209-31239	.							SHELF ASSEMBLY, Fuselage station 71.750 to station 131 LH	1	C	
	209-31239-201	.							SHELF ASSEMBLY, Fuselage station 71.750 to station 131 LH	1	KW	
	209-31239-301	.							SHELF ASSEMBLY, Fuselage station 71.750 to station 131 LH	1	FR	
-49	181-31241-3	.		.					ANGLE, Fuselage station 71.750 to station 131 wl +2.625 outboard LH	1		
	209-31207-101	.							FRAME ASSEMBLY, Fuselage station 95 to station 131	1	DN	467
	209-31207-201	.							FRAME ASSEMBLY, Fuselage station 95 to station 131	1	GY	
	209-31207-251	.							FRAME ASSEMBLY, Fuselage station 95 to station 131	1	FR	
	209-31316-101	.		.					BULKHEAD ASSEMBLY, Fuselage station 116.125 lower	1		
-50	209-61121-1	.		.	.				TRACK ASSEMBLY, 20MM gun fuselage station 116.125 ammunition LH	1		
	209-61121-2	.		.	.				TRACK ASSEMBLY, 20MM gun fuselage station 116.125 ammunition RH	1		
	209-31306	.		.					BULKHEAD ASSEMBLY, Fuselage station 106.875 lower	1	C	
	209-31306-101	.		.					BULKHEAD ASSEMBLY, Fuselage station 106.875 lower	1	KW	
	209-31306-201	.		.					BULKHEAD ASSEMBLY, Fuselage station 106.875 lower	1	FR	
-51	209-61120-1	.		.	.				TRACK ASSEMBLY, 20MM gun fuselage station 106.875 ammunition LH	1	ET	
	209-61120-2	.		.	.				TRACK ASSEMBLY, 20MM gun fuselage station 106.875 ammunition RH	1	ET	
	209-61120-11	.		.	.				TRACK ASSEMBLY, 20MM gun fuselage station 106.875 ammunition LH	1	FR	
	209-61120-12	.		.	.				TRACK ASSEMBLY, 20MM gun fuselage station 106.875 ammunition RH	1	FR	
-52	181-312220-11	.		.					TUBE ASSEMBLY, Cockpit drain LH	1		
	181-312220-12	.		.					TUBE ASSEMBLY, Cockpit drain RH	1		
-53	AN832-6D	.		.					UNION	2		
-54	AN924-6D	.		.					NUT	2		
-55	244-31210	.		.					CAP ASSEMBLY, Cockpit drain (supersedes AN929-6 for future procurement)	1		
-56	AN509-516R15	.		.					SCREW	2		
-57	AN509-516R14	.		.					SCREW	2		
-58	181-312188	.		.					WASHER, Fuselage gun bay door keeper	4		
-59	181-31332-1	.		.					KEEPER, Fuselage gun bay door latch (forward LH aft RH)	2		
	181-31332-2	.		.					KEEPER, Fuselage gun bay door latch (forward RH aft LH)	2		
-60	181-31330-5	.		.					PLATE, Fuselage gun bay door latch (forward)	1		
	181-31330-3	.		.					PLATE, Fuselage gun bay door latch (aft)	1		
-61	209-31245	.		.					KEEPER, Case and link compartment door latch fuselage station 99.125 to station 106.875 (superseded by 209-31246 for future procurement) (209-31245 together with 209-31074 supersedes 209-31050 for future procurement)	4		
-62	209-31246	.		.					KEEPER, Case and link compartment door latch fuselage station 99.125 to station 106.875 (supersedes 209-31245 for future procurement) (209-31246 together with 209-31074 supersedes 209-31050 for future procurement)	4		
-63	209-31315-1	.		.					FITTING, Fuselage station 116.125 bulkhead to longeron attaching LH	1		
	209-31315-2	.		.					FITTING, Fuselage station 116.125 bulkhead to longeron attaching RH	1		
-64	209-31280	.		.					FITTING, Station 99.125 upper gyro support (RH only)	1		
	ATTACHING PARTS											
	AN4-10A	.		.					BOLT	1		
	AN4-13A	.		.					BOLT	1		
	2W18-416M	.		.					WASHER, Flat (NA) (89372)	4		
	AN365-428	.		.					NUT	2		
	---*---											
-65	209-61731	.		.					PIN, Gun bay purge door operating (superseded by 209-61731-3 for future procurement)	1		
	209-61731-3	.		.					PIN, Gun bay purge door operating (supersedes 209-61731 for future procurement)	1		
-66	AN4-13A	.		.					BOLT	2		
-67	2W18-416M	.		.					WASHER, Flat (NA) (89372)	2		
-68	2W18-416	.		.					WASHER, Flat (NA) (89372)	2		
-69	AN365-428	.		.					NUT	2		
-70	AN24-27	.		.					BOLT	2		
-71	2W18-416M	.		.					WASHER, Flat (NA) (89372)	4		
-72	4B21S4-105	.		.					BUSHING, Spacer (NA) (89372)	1		
-73	AN320-4	.		.					NUT	2		
-74	209-61732-1	.		.					ARM ASSEMBLY, Gun bay purge door operating LH	1		
	209-61732-2	.		.					ARM ASSEMBLY, Gun bay purge door operating RH	1		
-75	4B20B6-010	.		.					BUSHING, Spacer (NA) (89372)	2		
-76	MS15001-3	.		.					FITTING, Lubricator	1		

FRAME ASSEMBLY (FUS STATION 53 TO 131)

FIGURE & INDEX NO.	PART NUMBER	1 2 3 4 5 6 7 NOMENCLATURE	UNITS PER ASSY.	USABLE ON CODE	S/C NO.
43-77	181-31106	. FITTING, Fuselage station 53 wheel well lower RH	1		
-78	181-55026	. FITTING, Fuselage station 53 jack pad RH	1		
	ATTACHING PARTS				
-79	AN4-16A	. BOLT	3		
	2W18-416M	. WASHER, Flat (NA) (89372)	6		
	AN365-428	. NUT	3		
-80	AN4-16A	. BOLT	3		
	2W18-416	. WASHER, Flat (NA) (89372)	6		
	AN365-428	. NUT	3		
	---*---				
-81	209-31281	. FITTING, Canted station 90.5 lower gyro support (RH only)	1		
	ATTACHING PARTS				
	NAS221-13	. SCREW	4	AD	
	NAS221-13	. SCREW	2	EK	
	AN509-10R13	. SCREW	2	EK	
	2W18-10M	. WASHER, Flat (NA) (89372)	8	AD	
	2W18-10M	. WASHER, Flat (NA) (89372)	4	EK	
	AN365-1032	. NUT	4		
	---*---				
-82	209-31279	. FITTING, Canted station 90.5 upper gyro support (RH only)	1		
	ATTACHING PARTS				
	AN4-7A	. BOLT	1		
	AN4-12A	. BOLT	2		
	2W18-416	. WASHER, Flat (NA) (89372)	6		
	AN365-428	. NUT	3		
	---*---				
-83	194-31214-411	. DUCT ASSEMBLY, Fuselage station 53 to fuselage station 129	1	Y	
	194-31214-751	. DUCT ASSEMBLY, Fuselage station 53 to fuselage station 129	1	FS	
	194-31214-771	. DUCT ASSEMBLY, Fuselage station 53 to fuselage station 129	1	FR	
-84	209-31327-11	. SHROUD ASSEMBLY, Fuselage station 127 aft gun bay LH	1		
	ATTACHING PARTS				
	NAS221-10	. SCREW	7		
	AN509-10R9	. SCREW	1		
	2W18-10	. WASHER, Flat (NA) (89372)	7		
	22NA5-02	. NUT, Anchor (EN) (72962)	5		
	3600-02	. NUT, Anchor (NUS) (80539)	3		
	---*---				
-85	AN3-5A	BOLT	3		
-86	AN3-6A	BOLT	1		
-87	AN3-7A	BOLT	4		
-88	2W18-10	WASHER, Flat (NA) (89372)	16		
-89	AN365-1032	NUT	8		
-90	209-58109-1	COVER ASSEMBLY, Hydraulic gun bay purge exit door actuating cylinder LH	1		
	209-58109-12	COVER ASSEMBLY, Hydraulic gun bay purge exit door actuating cylinder RH	1		
-91	AN520-10R10	SCREW	4		
-92	2W18-10M	WASHER, Flat (NA) (89372)	4		
-93	209-61733-1	BRACKET ASSEMBLY, Gun bay purge door operating LH	1		
	209-61733-2	BRACKET ASSEMBLY, Gun bay purge door operating RH	1		
-94	209-31291	SHROUD ASSEMBLY, Fuselage station 81.296 to station 127 wl plus 1.70 LH	1		
	98282-2-.160	. STUD (UC) (61864)	7		
	99836	. PIN (UC) (61864)	7		
-95	181-312206-11	SHROUD ASSEMBLY, Fuselage station 81.296 to station 127 wl plus 1.70 RH	1		
	98292-2-.250	. STUD (UC) (61864)	1		
	98292-2-.160	. STUD (UC) (61864)	5		
	99836	. PIN (UC) (61864)	6		
-96	209-31327-1	SHROUD ASSEMBLY, Fuselage station 127 aft gun bay LH	1	AD	
	209-31327-21	SHROUD ASSEMBLY, Fuselage station 127 aft gun bay LH	1	EK	
	ATTACHING PARTS				
	NAS221-10	SCREW	16		
	NAS221-7	SCREW	5		
	2W18-10	WASHER, Flat (NA) (89372)	28		
	22A5-02	NUT, Anchor (EN) (72962)	1		
	3600-02	NUT, Anchor (NUS) (80539)	20		
	---*---				
-97	181-53374	. NAMEPLATE, Heat and vent system canopy seal bottle attachment LH	1		
-98	209-31327-2	SHROUD ASSEMBLY, Fuselage station 127 aft gun bay RH	1	AD	
	209-31327-22	SHROUD ASSEMBLY, Fuselage station 127 aft gun bay RH	1	EK	
	ATTACHING PARTS				
	NAS221-10	SCREW	23		
	2W18-10	WASHER, Flat (NA) (89372)	31		
	22A5-02	NUT, Anchor (EN) (72962)	3		
	3600-02	NUT, Anchor (NUS) (80539)	20		
	---*---				
-99	181-34210-3	CAM, Nose landing gear wheel rotating	1		
-100	AN5-13A	BOLT	4		
-101	2W1-21-32-64	WASHER, Plain (NA) (89372)	4		
-102	181-34216	PLATE, Nose landing gear wheel rotating cam upper adjustment	1		
-103	181-34215	PLATE, Nose landing gear wheel rotating cam lower adjustment	1		
-104	181-34217	SHIM, Nose landing gear wheel rotating cam adjustment	AR		
-105	209-31420	FITTING ASSEMBLY, Canopy actuator tunnel drain	1		
-106	209-31420-7	. TUBE, Canopy actuator tunnel drain fitting assembly	1		
-107	AN819-6Z	. SLEEVE	1		
-108	AN816-6D	. NUT	1		

FRAME ASSEMBLY (FUS STA 53 TO 131)

FIGURE & INDEX NO.	PART NUMBER	1 2 3 4 5 6 7 NOMENCLATURE	UNITS PER ASSY.	USABLE ON CODE	S/C NO.
43-109	AN815-6D	NUT	1		
-110	181-318115-57	LINE ASSEMBLY, Cockpit enclosure canopy emergency system	1		
-111	AN818-6D	. SLEEVE	1		
-112	AN819-6Z	. SLEEVE	1		
-113	AN815-6D	NUT	1		
-114	209-314189	FITTING ASSEMBLY, Canopy actuator tunnel drain	1	ET	
	AN819-6Z	. SLEEVE	1	ET	
	AN818-6D	. NUT	1	ET	
-115	209-31899	SUPPORT, Canopy actuator screw forward bearing	1		
-116	AN5-7A	BOLT	2		
	2W13-5	WASHER, Serrated (NA) (89372)	2		
	3600-054	NUT (NUS) (80539)	1		
-117	244-59104	NAMEPLATE, Pneumatic system storage bottle bleed instruction	1	ME	

ALL DATA DELETED FROM PAGE 167

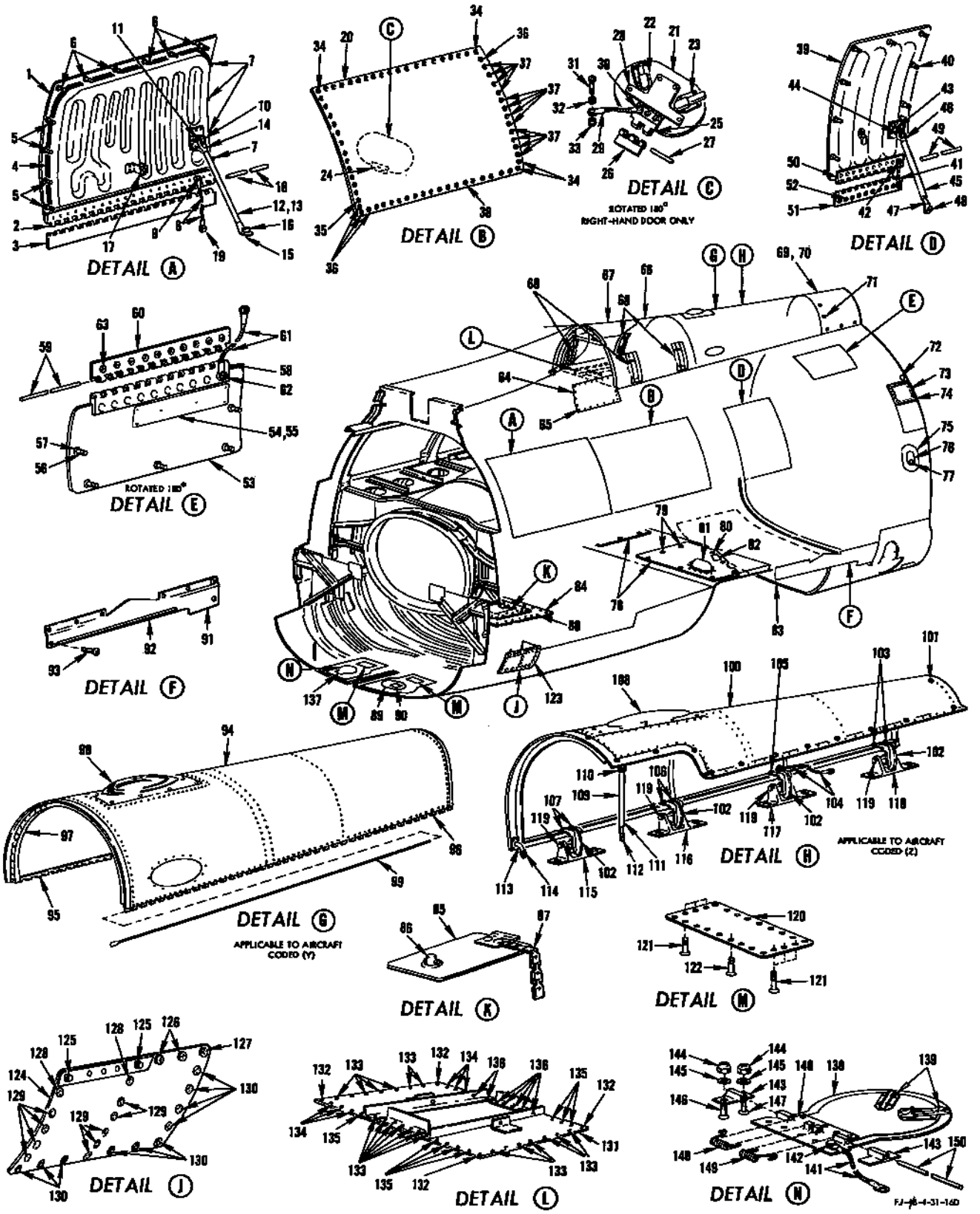

FIGURE 44 - ACCESS DOORS, INSPECTION DOORS AND PANELS (FUS STA 131 TO 236.25)

ACCESS DOORS, INSPECTION DOORS AND PANELS (FUS STA 131 TO 236.25)

FIGURE & INDEX NO.	PART NUMBER	1 2 3 4 5 6 7 NOMENCLATURE	UNITS PER ASSY.	USABLE ON CODE	S/C NO.
44-1	181-31050-101	DOOR ASSEMBLY, Fuselage station 131 to station 156 equipment LH (electrical and radio equipment access)	1		
	181-31050-102	DOOR ASSEMBLY, Fuselage station 131 to station 156 equipment RH (electrical and radio equipment access)	1		
-2	181-31058-3	. HINGE, Fuselage station 131 to station 156 equipment door LH	1		
	181-31058-8	. HINGE, Fuselage station 131 to station 156 equipment door RH	1		
-3	181-31058-5	. HINGE, Fuselage station 131 to station 156 equipment door LH	1		
	181-31058-10	. HINGE, Fuselage station 131 to station 156 equipment door RH	1		
-4	181-31050-7	. SEAL, Fuselage station 131 to station 156 equipment door assembly (LH door)	1		
	181-31050-8	. SEAL, Fuselage station 131 to station 156 equipment door assembly (RH door)	1		
-5	UF5T30	. FASTENER (DZ) (72794)	4		
	GH5	. GROMMET (DZ) (72794)	4		
	URF5	. RECEPTACLE (DZ) (72794)	4		
	URF5-3	. SPACER (DZ) (72794)	4		
-6	UF5T50	. FASTENER (DZ) (72794)	6		
	GH5	. GROMMET (DZ) (72794)	6		
	URF5	. RECEPTACLE (DZ) (72794)	6		
	URF5-3	. SPACER (DZ) (72794)	6		
-7	UF5T40	. FASTENER (DZ) (72794)	4		
	GH5	. GROMMET (DZ) (72794)	4		
	URF5	. RECEPTACLE (DZ) (72794)	4		
	URF5-3	. SPACER (DZ) (72794)	4		
-8	AN749-3-4	. JUMPER	1		
-9	AN509-8R15	. SCREW	1		
	2W1AL12-14-64	. WASHER, Plain (NA) (89372)	2		
	NAS43DD3-16	. SPACER	1		
	AN365-832	. NUT	1		
-10	AN42-4	. BOLT	1		
	2W1AL13-24-64	. WASHER, Plain (NA) (89372)	1		
	AN310-3	. NUT	1		
-11	AN393-13	. PIN	1		
	2W1AL13-14-64	. WASHER, Plain (NA) (89372)	1		
-12	181-315185-101	*1 . ROD ASSEMBLY, Fuselage station 131 to station 156 equipment door support LH	1		
	AN481-12P	. . CLEVIS	1		
	UF5T40	. . FASTENER (DZ) (72794)	1		
	GH5	. . GROMMET (DZ) (72794)	1		
	181-315189	. . EYE FASTENER, Fuselage station 131 to station 156 equipment	1		
-13	181-315186-101	*1 . ROD ASSEMBLY, Fuselage station 131 to station 156 equipment door support LH and RH	1		
-14	AN481-12P	. . CLEVIS	1		
-15	181-315190	. . EYE FASTENER, Fuselage station 131 to station 156 equipment	1		
-16	UF5T40	. . FASTENER (DZ) (72794)	1		
	GH5	. . GROMMET (DZ) (72794)	1		
-17	194-315112-101	. CLIP ASSEMBLY, Fuselage station 131 to station 156 equipment door LH	1		
	194-315112-102	. CLIP ASSEMBLY, Fuselage station 131 to station 156 equipment door RH	1		
	URF5	. . RECEPTACLE (DZ) (72794)	1		
	URF5-3	. . SPACER (DZ) (72794)	2		
-18	2P7-9-24-7/8	PIN ASSEMBLY, Hinge (NA) (89372)	1		
-19	AN509-8R11	SCREW	1		
	2W1AL11-12-32	WASHER, Plain (NA) (89372)	1		
	AN365-832	NUT	1		
-20	209-31053	DOOR, Fuselage station 156 to station 180 structural LH (refrigeration unit and fuel probe access)	1		
	209-31052	DOOR ASSEMBLY, Fuselage station 156 to station 180.906 structural RH (refrigeration unit and fuel probe access)	1		
-21	181-31054-11	. DOOR ASSEMBLY, Fuselage station 173 hydraulic reserve filler RH side	1		
-22	181-31054-6	. . LATCH ASSEMBLY, Fuselage station 173 hydraulic reserve filler RH side door assembly	1		
-23	181-31054-5	. . LATCH ASSEMBLY, Hydraulic reserve filler RH side door assembly	1		
-24	181-31060	. . HINGE ASSEMBLY, Fuselage station 170.75 hydraulic reserve filler door	1		
-25	181-31060-5	. . . HINGE, Fuselage station 170.75 hydraulic reserve filler door hinge assembly	1		
-26	181-31060-3	. . . HINGE, Fuselage station 170.75 hydraulic reserve filler door hinge assembly	1		
-27	AN253-2-200	. . . PIN	1		
-28	209-58217	. . NAMEPLATE, Hydraulic utility system	1		
-29	AN749-3-3	. . JUMPER	1		
-30	AN509-8R9	. . SCREW	1		
	AN960D8L	. . WASHER	1		
	AN365-832	. . NUT	1		
-31	AN509-10R6	. SCREW	1		
-32	2W1AL13-14-16	. WASHER, Plain (NA) (89372)	1		
-33	AN365-1032	. NUT	1		
-34	AN509-516R16	SCREW	4		
-35	AN509-516R19	SCREW	1		
-36	AN509-516R18	SCREW	4		
-37	AN509-516R13	SCREW	12		
-38	AN509-516R14	SCREW	46		
	AN366F524	NUT PLATE	62		

ACCESS DOORS, INSPECTION DOORS AND PANELS (FUS STA 131 TO 236.25)

FIGURE & INDEX NO.	PART NUMBER	1 2 3 4 5 6 7 NOMENCLATURE	UNITS PER ASSY.	USABLE ON CODE	S/C NO.
44-39	209-31062-1	DOOR ASSEMBLY, Fuselage station 190 to station 201.5 engine access	1		
	209-31062-2	DOOR ASSEMBLY, Fuselage station 190 to station 201.5 engine access	1		
-40	UF5T20	. FASTENER (DZ) (72794)	9		
	GH5	. GROMMET (DZ) (72794)	9		
	URF5	. RECEPTACLE (DZ) (72794)	9		
	URF5-3	. SPACER (DZ) (72794)	9		
-41	AN749-3-3	. JUMPER	1		
-42	AN509-8R10	. SCREW	1		
	2W18-8	. WASHER, Flat (NA) (89372)	1		
	AN365-832	. NUT	1		
-43	AN42-5	. BOLT	1		
	2W1AL13-24-64	. WASHER, Plain (NA) (89372)	1		
	AN310-3	. NUT	1		
-44	AN393-13	. PIN	1		
	2W1AL13-14-64	. WASHER, Plain (NA) (89372)	1		
-45	209-315184	. ROD ASSEMBLY, Fuselage station 190 to station 201.5 engine access	1		
-46	AN481-4P	. . CLEVIS	1		
-47	209-315187	. . EYE FASTENER, Fuselage station 190 to station 201.5 engine access	1		
-48	UF5T40	. . FASTENER (DZ) (72794)	1		
	GH5	. . GROMMET (DZ) (72794)	1		
	2W1AL18-20-64	. . WASHER, Plain (NA) (89372)	1		
-49	AN253-2-1000	. PIN	1		
-50	209-315165	. HINGE, Station 190 to station 201.5 engine access door lower	1		
-51	209-315164	. HINGE, Station 190 to station 201.5 engine access door upper	1		
-52	AN509-10R11	SCREW	20		
	2W18-10	WASHER, Flat (NA) (89372)	20		
	AN365-1032	NUT	20		
-53	209-31040-1	DOOR ASSEMBLY, Fuselage station 215 to station 227.5 control disconnect LH (engine bleed line disconnect access)	1		
	209-31040-2	DOOR ASSEMBLY, Fuselage station 215 to station 227.5 control disconnect RH (engine bleed line disconnect access)	1		
-54	209-58307	. NAMEPLATE, Hydraulic flight control system No. 1 engine pump disconnect (use on LH door only)	1		
-55	181-58728	. NAMEPLATE, Fuselage station 215 control and hydraulic disconnect door assembly (use on RH door only)	1		
-56	UF5T20	. FASTENER (DZ) (72794)	5		
-57	GH5	. GROMMET (DZ) (72794)	5		
	URF5	. RECEPTACLE (DZ) (72794)	5		
	URF5-3	. SPACER (DZ) (72794)	10		
-58	209-314171	. HINGE, Fuselage station 215 to station 227.5 control access door lower	1		
-59	AN253-2-1000	. PIN	1		
-60	209-314172	. HINGE, Fuselage station 215 to station 227.5 control access door upper	1		
-61	AN749-3-3	. JUMPER	1		
-62	AN509-8R9	. SCREW	1		
	2W1AL12-12-32	. WASHER, Plain (NA) (89372)	2		
	AN365-832	. NUT	1		
-63	AN509-10R8	SCREW	20		
	2W18-10	WASHER, Flat (NA) (89372)	20		
	AN365-1032	NUT	20		
-64	209-31058	DOOR, Fuselage station 156 to station 170 electrical access LH	1		
-65	AN509-8R6	SCREW	38		
	3600-82	NUT, Anchor (NUS) (80539)	34		
	22A17-82	NUT, Anchor (EN) (72962)	2		
-66	209-31033	DOOR ASSEMBLY, Fuselage station 170 to station 187.75 forward fairing (battery and heat and vent access)	1		
-67	209-31060	. PANEL ASSEMBLY, Forward fairing door blowout	1		
	209-31060-3	. . GLASS MAT STRIP, Forward fairing door blowout panel assembly	1		
	209-31060-7	. . GLASS MAT PANEL, Forward fairing door blowout panel assembly	1		
-68	H-9190S	. LATCH ASSEMBLY (HWL) (83014)	4		
	ATTACHING PARTS				
	AN3-14	. BOLT	4		
	2W18-10	. WASHER, Flat (NA) (89372)	8		
	AN320-3	. NUT	4		
-69	209-31034	---*---			
-69	209-31034	DOOR ASSEMBLY, Fuselage station 227.5 to station 237.438 aft fairing (aft electrical disconnect access)	1	Y	330
	ATTACHING PARTS				
	AN509-10R6	SCREW	17		
	3600-02	NUT, Anchor (NUS) (80539)	15		
	3610-02	NUT, Anchor (NUS) (80539)	2		
		---*---			
-70	209-31009	DOOR, Fuselage station 227.53 to station 237.75 aft fairing assembly of (aft electrical disconnect access)	1	Z	
	209-31009-3	. DOOR, Fuselage station 227.53 to station 237.75 aft fairing assembly of door	1		
	AN751B2-4	. JUMPER	1		
	ATTACHING PARTS				
	AN509-10R10	. SCREW	1		
	2W1AL14-14-16	. WASHER, Plain (NA) (89372)	2		
	AN365-1032	. NUT	1		
		---*---			
-71	4S7-4	. STUD (CLC) (71286)	10	Z	
	4S10-1	. RING (CLC) (71286)	10	Z	
	4R19-14-102	SHIM (CLC) (71286)	6	Z	
	4R1-14	RECEPTACLE (CLC) (71286)	10	Z	

ACCESS DOORS, INSPECTION DOORS AND PANELS (FUS STA 131 TO 236.25)

FIGURE & INDEX NO.	PART NUMBER	1 2 3 4 5 6 7 NOMENCLATURE	UNITS PER ASSY.	USABLE ON CODE	S/C NO.
44-72	209-315106	PLUG, Fuselage station 236.25 upper longeron forward barrel nut	2		
-73	209-31027	DOOR, Fuselage station 230.062 to station 236.25 fuel tube access assembly of	1		
	209-31027-3	. DOOR, Fuselage station 230.062 to station 236.25 fuel tube access assembly of door	1		
-74	AN509-10R12	SCREW	20		
	3600-02	NUT, Anchor (NUS) (80539)	20		
-75	209-73014	DOOR AND DOUBLER ASSEMBLY, Cockpit enclosure cover strap attaching point	1		
-76	209-73013	. PLATE ASSEMBLY, Cockpit enclosure cover strap attaching point	1		
-77	3F5170-3	. . STUD AND CABLE ASSEMBLY (UC) (61864)	1		
	99836	. . PIN (UC) (61864)	1		
	295018	. WASHER (UC) (61864)	1		
	99947-P-.130	. RECEPTACLE (UC) (61864)	1		
-78	209-31594-1	DOOR ASSEMBLY, Engine access fuselage station 190 to station 197 lower LH	1		
	209-31594-2	DOOR ASSEMBLY, Engine access fuselage station 190 to station 197 lower RH	1		
-79	98292-2-.210	. STUD (UC) (61864)	2		
	99836	. PIN (UC) (61864)	2		
	99947-P-.130	. RECEPTACLE (UC) (61864)	2		
-80	98292-2-.170	. STUD (UC) (61864)	6		
	99836	. PIN (UC) (61864)	6		
	99947-P-.130	. RECEPTACLE (UC) (61864)	6		
-81	209-315166	. CUP ASSEMBLY, Fuselage station 185.312 wheel well cover	1		
-82	209-58203-23	. NAMEPLATE, Hydraulic disconnect bracket (No. 1 flight control reservoir drain) (LH door)	1		
	209-58203-25	. NAMEPLATE, Hydraulic disconnect bracket (No. 2 flight control reservoir drain) (RH door)	1		
-83	209-31010-151	DOOR ASSEMBLY, Engine access fuselage station 204.188 to station 236.063 (see figure 47 for breakdown)	1	GP	472
	209-31010-101	DOOR ASSEMBLY, Engine access fuselage station 204.188 to station 236.063 (see figure 47 for breakdown)	1	GQ	472
-84	209-31030	DOOR ASSEMBLY, Fuselage station 167.032 aft fuel pump access RH	1		
	209-31030-7	. DOOR, Fuselage station 167.032 aft fuel pump access door assembly	1		
-85	209-31057-51	. DOOR ASSEMBLY, Fuel cell drain plug (aft fuel pump access)	1		
-86	UF5T20	. . FASTENER (DZ) (72794)	1		
	GH5	. . GROMMET (DZ) (72794)	1		
-87	9C1-3-3	. . CHAIN, Safety (NA) (89372)	1		
	URF5-3	. SPACER (DZ) (72794)	2		
	URF5	. RECEPTACLE (DZ) (72794)	1		
-88	AN509-10R10	SCREW	32		
	3600-02	NUT, Anchor (NUS) (80539)	28		
	22A35-02	NUT, Anchor (EN) (72962)	4		
-89	209-31029	DOOR ASSEMBLY, Fuselage station 122.343 forward fuel pump access	1		
	ATTACHING PARTS				
	AN509-10R9	SCREW	34		
	3600-02	NUT, Anchor (NUS) (80539)	34		
	---*---				
	99947-P-.130	. RECEPTACLE (MKL) (76530)	1		
-90	209-31057	. DOOR ASSEMBLY, Fuel cell drain plug	1		
	98265-2-.190	. . PIN (MKL) (76530)	1		
	99836	. . CROSS PIN (MKL) (76530)	1		
-91	209-31413-65	COVER, Fuselage station 131 to station 236.25 side panel assembly LH (wing bolt access)	1		
	209-31413-66	COVER, Fuselage station 131 to station 236.25 side panel assembly RH (wing bolt access)	1		
-92	209-31413-15	SEAL, Fuselage station 131 to station 236.25 side panel assembly	1		
-93	H63-101015-51	SCREW (SH) (78189)	6		
	22A217-22-02	NUT, Anchor (EN) (72962)	2		
	3600-02	NUT, Anchor (NUS) (80539)	4		
-94	209-31501	FAIRING ASSEMBLY, Fuselage station 188 to station 227.5 top (electrical bay access)	1	Y	330
-95	209-31501-24	. HALF HINGE, Fuselage station 188 to station 227.5 top fairing assembly RH	1	Y	
-96	209-31501-23	. HALF HINGE, Fuselage station 188 to station 227.5 top fairing assembly LH	1	Y	
-97	209-31501-19	. SEAL, Fuselage station 188 to station 227.5 top fairing assembly	1	Y	
-98	G-7005-2-24	. LIGHT ASSEMBLY, Fuselage signal (GMC) (72914) (see Electrical and Instrument)	1	Y	
-99	209-31601-13	PIN HINGE, Forward section station 0 to station 236.25 complete fuselage assembly	2	Y	330
-100	209-31570	FAIRING, Fuselage station 186 to fuselage station 227.5 top assembly of (electrical bay access)	1	Z	
-101	4S10-1	. RING (CLC) (71286)	13	Z	
	4S7-4	. STUD (CLC) (71286)	13	Z	
	4R15-14-102	. SHIM (CLC) (71286)	13	Z	
	4R1-14	. RECEPTACLE (CLC) (71286)	13	Z	
-102	209-31563	. HINGE, Fuselage station 188 to station 227.5 fairing assembly	4	Z	
-103	AN509-10R11	. SCREW	2	Z	
	2W18-10M	. WASHER, Flat (NA) (89372)	2	Z	
	AN365-1032	. NUT	2	Z	
-104	AN749-3-5	. JUMPER	1	Z	
	ATTACHING PARTS				
	AN509-10R12	. SCREW	1	Z	
	NAS221-4	. SCREW	1	Z	
	2W1AL14-14-16	. WASHER, Plain (NA) (89372)	1	Z	
	2W18-10M	. WASHER, Flat (NA) (89372)	1	Z	
	AN365-1032	. NUT	1	Z	
	---*---				

ACCESS DOORS, INSPECTION DOORS AND PANELS (FUS STA 131 TO 236.25)

FIGURE & INDEX NO.	PART NUMBER	1 2 3 4 5 6 7 NOMENCLATURE	UNITS PER ASSY.	USABLE ON CODE	S/C NO.
44-105	AN509-10R11	. SCREW	1	Z	
	2W1AL14-14-16	. WASHER, Plain (NA) (89372)	1	Z	
	AN365-1032	. NUT	1	Z	
-106	AN509-10R11	. SCREW	2	Z	
	2W18-10M	. WASHER, Flat (NA) (89372)	2	Z	
	AN365-1032	. NUT	2	Z	
-107	AN509-10R12	. SCREW	2	Z	
	2W18-10M	. WASHER, Flat (NA) (89372)	2	Z	
	AN365-1032	. NUT	2	Z	
-108	G-7005-2-24	. LIGHT ASSEMBLY, Fuselage signal (GMC) (72914) (see Electrical and Instrument)	1	Z	
-109	209-315121	. ROD ASSEMBLY, Fuselage station 188 fairing door hold open	1	Z	
	ATTACHING PARTS				
	AN42-4	. EYEBOLT	1	Z	
	2W18-10	. WASHER, Flat (NA) (89372)	3	Z	
	AN320-3	. NUT	1	Z	
	AN393-17	. PIN	1	Z	
	---*---				
-110	209-31534	. . FITTING, Fuselage station 227.5 fairing support	1	Z	
	AN316-5	. . NUT	1	Z	
-111	209-315121-3	. . GLASS FABRIC, Fuselage station 188 fairing door hold open	1	Z	
-112	209-315120	. . ROD, Fuselage station 188 fairing door hold open	1	Z	
-113	209-31528	. STOP, Fuselage fairing station 187.438 assembly of	1	Z	
-114	AN316-4	NUT	2	Z	
-115	209-31562-3	FITTING, Fairing assembly fuselage station 188 to station 227.5	1	Z	
	209-31584-3	FITTING, Fairing fuselage station 188 to station 227.5 hinge	1		330
	ATTACHING PARTS				
	AN4-6A	BOLT	2	Z	
	2W18-416M	WASHER, Flat (NA) (89372)	4	Z	
	AN365-428	NUT	2	Z	
	---*---				
-116	209-31562-5	FITTING, Fairing assembly fuselage station 188 to station 227.5	1	Z	
	209-31584-5	FITTING, Fairing assembly fuselage station 188 to station 227.5 hinge	1		330
	ATTACHING PARTS				
	AN4-6A	BOLT	2	Z	
	2W18-416M	WASHER, Flat (NA) (89372)	4	Z	
	AN365-428	NUT	2	Z	
	---*---				
-117	209-31562-9	FITTING, Fairing assembly fuselage station 188 to station 227.5	1	Z	
	209-31584-9	FITTING, Fairing fuselage station 188 to station 227.5 hinge	1		330
	ATTACHING PARTS				
	AN4-13A	BOLT	2	Z	
	2W18-416	WASHER, Flat (NA) (89372)	4	Z	
	AN365-428	NUT	2	Z	
	---*---				
-118	209-31562-9	FITTING, Fairing assembly fuselage station 188 to station 227.5	1	Z	
	209-31584-9	FITTING, Fairing fuselage station 188 to station 227.5 hinge	1		330
	ATTACHING PARTS				
	AN4-13A	BOLT	2	Z	
	2W18-416	WASHER, Flat (NA) (89372)	4	Z	
	AN365-428	NUT	2	Z	
	---*---				
-119	AN392-49	PIN	4	Z	
-120	209-31025	DOOR, Catapult hook attaching pin access RH	2		
-121	AN509-10R9	SCREW	12		
-122	AN509-10R10	SCREW	35		
	22A5-02	NUT, Anchor (EN) (72962)	46		
	6820-02	BOLT, Retainer (NUS) (80539)	1		
	AN364-1032	NUT	1		
-123	209-31026-1	DOOR ASSEMBLY, Fuselage station 131 wing bolt nut access LH	1		
	209-31026-2	DOOR ASSEMBLY, Fuselage station 131 wing bolt nut access RH	1		
-124	209-31026-3	. DOOR, Fuselage station 131 wing bolt nut access door assembly LH	1		
	209-31026-4	. DOOR, Fuselage station 131 wing bolt nut access door assembly RH	1		
-125	AN3-7A	BOLT	2		
	2W18-10M	WASHER, Flat (NA) (89372)	2		
	3600-02	NUT, Anchor (NUS) (80539)	2		
-126	AN520-10R12	SCREW	2		
	2W18-10M	WASHER, Flat (NA) (89372)	2		
	3600-02	NUT, Anchor (NUS) (80539)	2		
-127	AN520-10R14	SCREW	1		
	2W18-10M	WASHER, Flat (NA) (89372)	1		
	3600-02	NUT, Anchor (NUS) (80539)	1		
-128	AN509-10R12	SCREW	2		
	3600-02	NUT, Anchor (NUS) (80539)	2		
-129	AN509-10R9	SCREW	9		
	3600-02	NUT, Anchor (NUS) (80539)	9		
-130	AN509-10R8	SCREW	10		
	3600-02	NUT, Anchor (NUS) (80539)	10		
-131	209-31023	DOOR ASSEMBLY, Fuselage station 170 to station 180.906 (battery hold-down stud)	1		
-132	NAS221-11	SCREW	4		
-133	NAS221-10	SCREW	19		
-134	AN3-4A	BOLT	6		

ACCESS DOORS, INSPECTION DOORS AND PANELS (FUS STA 131 TO 236.25)

FIGURE & INDEX NO.	PART NUMBER	1 2 3 4 5 6 7 NOMENCLATURE	UNITS PER ASSY.	USABLE ON CODE	S/C NO.
44	22A5-02	NUT, Anchor (EN) (72962)	6		
-135	NAS221-9	SCREW	8		
-136	AN509-10R10	SCREW	7		
	2W18-10M	WASHER, Flat (NA) (89372)	37		
	3600-02	NUT, Anchor (NUS) (80539)	38		
-137	209-31028	DOOR ASSEMBLY, Fuselage station 123.656 single-point refueling	1		
-138	209-31028-7	. DOOR, Fuselage station 123.656 single-point refueling door assembly	1		
-139	H-5000-156-156	. LATCH (HWL) (83014)	2		
-140	209-314110	. HINGE, Fuselage station 123.656 single-point refueling door	1		
-141	10B1-4-3-4	. BONDING, Jumper (NA) (89372)	1		
	ATTACHING PARTS				
-142	AN509-8R13	. SCREW	1		
	2W1AL14-14-16	. WASHER, Plain (NA) (89372)	2		
	AN365-1032	. NUT	1		
	---*---				
-143	209-314111	HINGE, Fuselage station 123.656 single-point refueling	2		
-144	AN365-1032	NUT	4		
-145	2W18-10M	WASHER, Flat (NA) (89372)	4		
-146	AN509-10R13	SCREW	2		
-147	AN509-10R11	SCREW	2		
-148	209-314106-12	SPRING, Refueling door hold open	1		
-149	209-314106-11	SPRING, Refueling door hold open	1		
-150	209-314112	PIN, Fuselage station 123.656 single-point refueling hinge	1		

NOTE: *1 186-315186-101 together with 194-315112-102 supersedes 181-315185-101 together with 194-315117-101 for future procurement

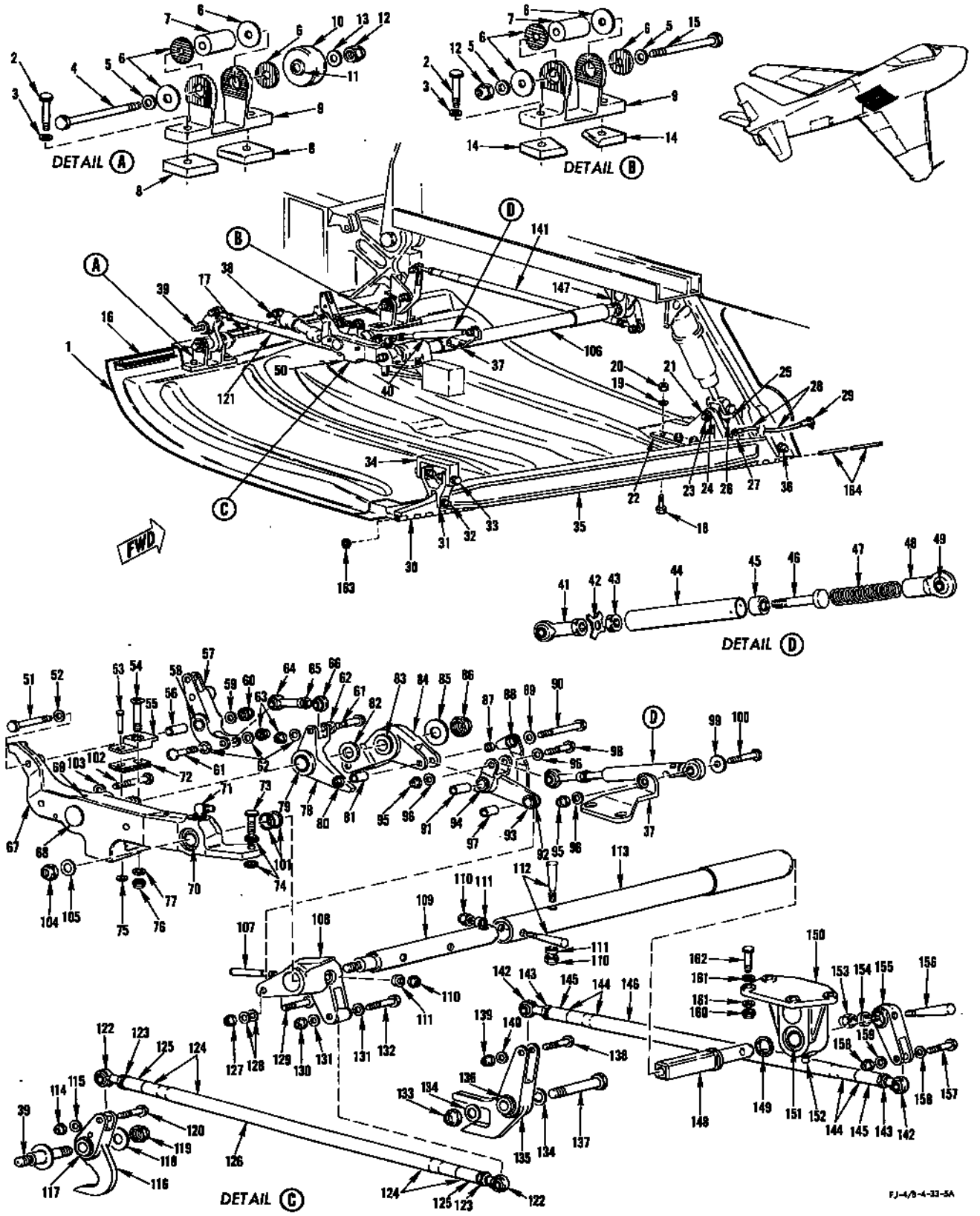

FIGURE 45 - MAIN LANDING GEAR WHEEL DOOR

MAIN LANDING GEAR WHEEL DOOR

FIGURE & INDEX NO.	PART NUMBER	1 2 3 4 5 6 7 NOMENCLATURE	UNITS PER ASSY.	USABLE ON CODE	S/C NO.
45-107	AN386-2-11A	. PIN	1		
-108	209-33577-3	. BELLCRANK, Main landing gear wheel door latch support LH (drill on installation)	1		
	209-33577-4	. BELLCRANK, Main landing gear wheel door latch support RH (drill on installation)	1		
-109	209-33602-5	. END, Main landing gear wheel door latch torque shaft aft (drill on installation)	1		
-110	AN364-1032	. NUT	3		
-111	AN975-3	. WASHER	3		
-112	AN386-2-9A	. PIN	2		
-113	209-33601-11	. TUBE ASSEMBLY, Main landing gear wheel door latch torque shaft (drill on installation)	1		
-114	AN364-428	NUT	1		
-115	2W18-416M	WASHER, Flat (NA) (89372)	1		
-116	209-33584-5	HOOK ASSEMBLY, Main landing gear wheel door latch aft	1		
-117	AT-7	. BEARING (TOR) (60380)	1		
-118	2W1-28-34-62	WASHER, Plain (NA) (89372)	1		
-119	AN364-720	NUT	1		
-120	AN24-14A	BOLT	1		
-121	209-33582-3	ROD ASSEMBLY, Main landing gear wheel door latch	1		
-122	HMX-4FG	. ROD END (HEC) (73134)	2		
-123	AN316-5R	. NUT	2		
-124	209-33582-13	. ROD SUBASSEMBLY, Main landing gear wheel door latch	1		
-125	181-34580	. . ROD END, Landing gear wheel door lock actuating	2		
-126	209-33582-7	. . TUBE, Main landing gear wheel door latch rod subassembly	1		
-127	AN364-1032	NUT	1		
-128	2W18-10M	WASHER, Flat (NA) (89372)	2		
-129	AN23-15A	BOLT	1		
-130	AN364-428	NUT	1		
-131	2W18-416M	WASHER, Flat (NA) (89372)	2		
-132	AN24-15A	BOLT	1		
-133	AN364-720	NUT	1		
-134	2W18-716	WASHER, Flat (NA) (89372)	2		
-135	209-33588-5	HOOK ASSEMBLY, Main landing gear wheel door latch forward	1		
-136	7NBC1015YZP	. BEARING (TOR) (60380)	1		
-137	AN7-17A	BOLT	1		
-138	AN24-14A	BOLT	1		
-139	AN364-428	NUT	1		
-140	2W18-416M	WASHER, Flat (NA) (89372)	1		
-141	209-33582-1	ROD ASSEMBLY, Main landing gear wheel door latch	1		
-142	HMX-4FG	. ROD END (HEC) (73134)	2		
-143	AN316-5R	. NUT	2		
-144	209-33582-11	. ROD SUBASSEMBLY, Main landing gear wheel door latch	1		
-145	181-34580	. . ROD END, Landing gear wheel door lock actuating	2		
-146	209-33583-5	. . TUBE, Main landing gear wheel door latch rod subassembly	1		
-147	209-33595-1	BRACKET ASSEMBLY, Main landing gear wheel door torque shaft LH	1		
	209-33595-2	BRACKET ASSEMBLY, Main landing gear wheel door torque shaft RH	1		
-148	209-33603-3	. END, Main landing gear wheel door latch torque shaft forward 209-33603-3 together with 209-33599 supersedes 209-33603 for future procurement)	1		
-149	209-33599	. SPACER, Main landing gear wheel door torque shaft bracket assembly (209-33599 together with 209-33603-3 supersedes 209-33603 for future procurement)	1		
-150	209-33590	. FITTING ASSEMBLY, Main landing gear wheel door latch torque shaft	1		
-151	HSBG-10	. . BEARING (HLF) (97613)	1		
	NAS50-118	. . RING	1		
-152	MS15001-1	. . FITTING, Lubrication	1		
-153	AN364-1032	. NUT	1		
-154	AN975-3	. WASHER	1		
-155	209-33591-3	. BELLCRANK, Main landing gear wheel door forward latch	1		
-156	AN386-2-9A	. PIN	1		
-157	AN24-15A	BOLT	1		
-158	2W18-416M	WASHER, Flat (NA) (89372)	2		
-159	AN364-428	NUT	1		
-160	AN365-428	NUT	4		
-161	2W18-416	WASHER, Flat (NA) (89372)	8		
-162	AN4-10A	BOLT	4		
	68008-048	RETAINER, Bolt (NUS) (80539)	4		
-163	2W1-14-11-32	WASHER, Plain (NA) (89372)	1		
-164	209-33320	PIN, Main landing gear wheel door hinge attaching	1		

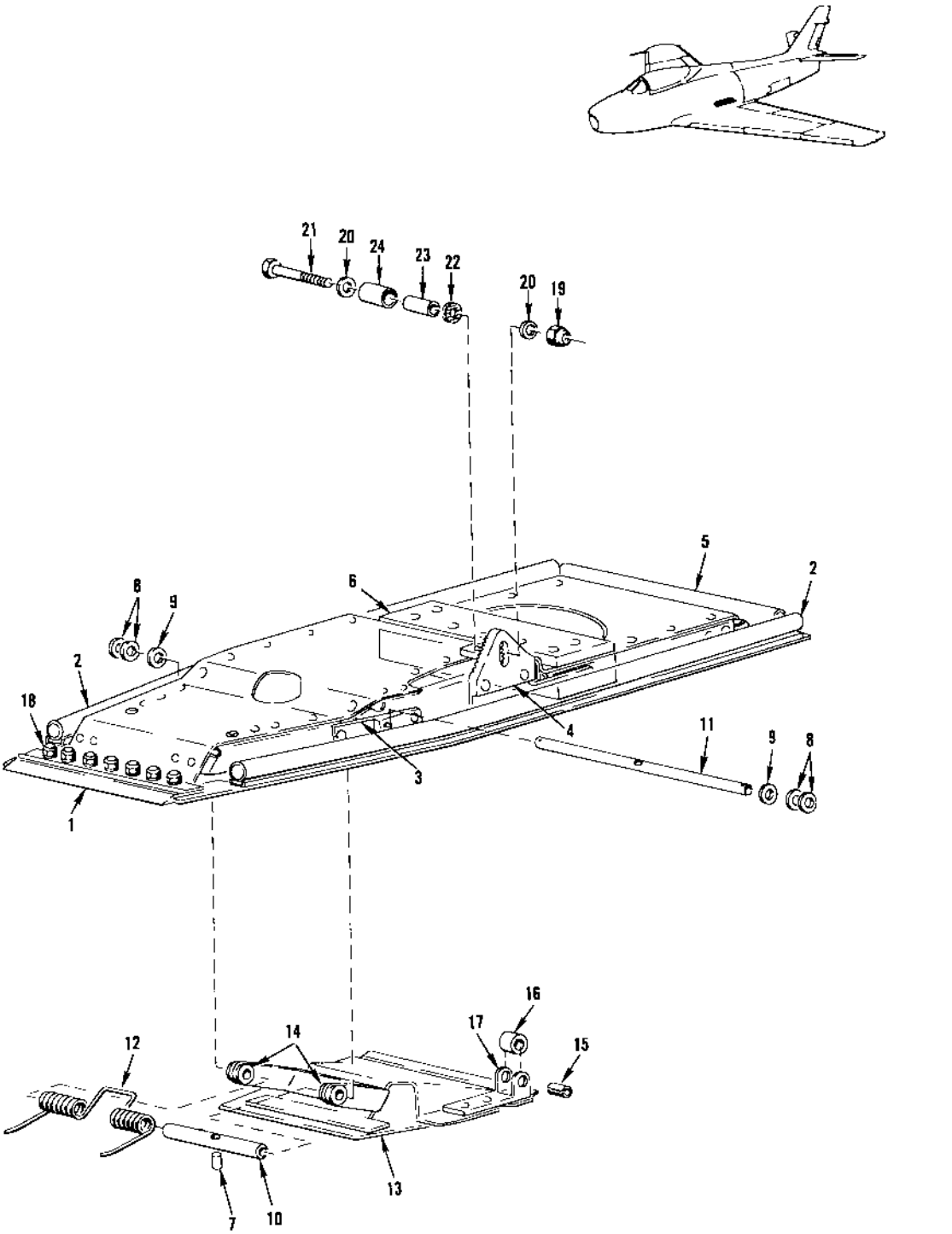

FIGURE 46 - CATAPULT HOLDBACK DOOR

CATAPULT HOLDBACK DOOR

FIGURE & INDEX NO.	PART NUMBER	1 2 3 4 5 6 7 NOMENCLATURE	UNITS PER ASSY.	USABLE ON CODE	S/C NO.
46	209-56604	DOOR ASSEMBLY, Catapult holdback	1		
-1	209-56621-3	. SEAL, Holdback door forward extrusion	1		
-2	209-56604-23	. WEATHERSEAL, Catapult holdback door assembly	2		
-3	209-56611	. HINGE FITTING, Holdback trip door	2		
-4	209-56606	. SUPPORT FITTING, Holdback uplock roller	1		
-5	209-56604-25	. WEATHERSEAL, Catapult holdback door assembly	1		
-6	209-56605	. BLOCK, Holdback door	1		
-7	52-012-062-0375	. ROLLPIN (EN) (72962)	1		
-8	2W18-10M	. WASHER, Flat (NA) (89372) (use as required on end of hinge pin to center trip door)	AR		
-9	2W18-10	. WASHER, Flat (NA) (89372)	2		
-10	4B12B3-212	. BUSHING, Spacer (NA) (89372)	1		
-11	209-56609	. HINGE PIN, Holdback uplock trip door	1		
-12	209-56608	. SPRING, Holdback uplock trip door (torsion)	1		
-13	209-56607	. DOOR ASSEMBLY, Holdback uplock trip	1		
-14	4B18-3-51	. . BUSHING, Shoulder (NA) (89372)	2		
-15	59-040-187-0500	. . ROLLPIN (EN) (72962)	1		
-16	209-55612	. . ROLLER, Holdback uplock trip door (supersedes 4B21M-S3-011 (NA) (89372) and 4B21M-S5-011 (NA) (89372) for future procurement)	1		
-17	209-56610	. . SUPPORT FITTING, Holdback uplock trip door roller	1		
-18	AN364-632	NUT	7		
	2W18-6	WASHER, Flat (NA) (89372)	7		
	AN507-632R6	SCREW	7		
-19	AN365-428	NUT	1		
-20	2W18-416M	WASHER, Flat (NA) (89372)	2		
-21	AN4-13A	BOLT	1		
-22	209-56616	WASHER, Holdback uplock adjusting	1		
-23	4B21M-S4-019	BUSHING, Spacer (NA) (89372)	1		
-24	4B21M-S6-018	BUSHING, Spacer (NA) (89372)	1		

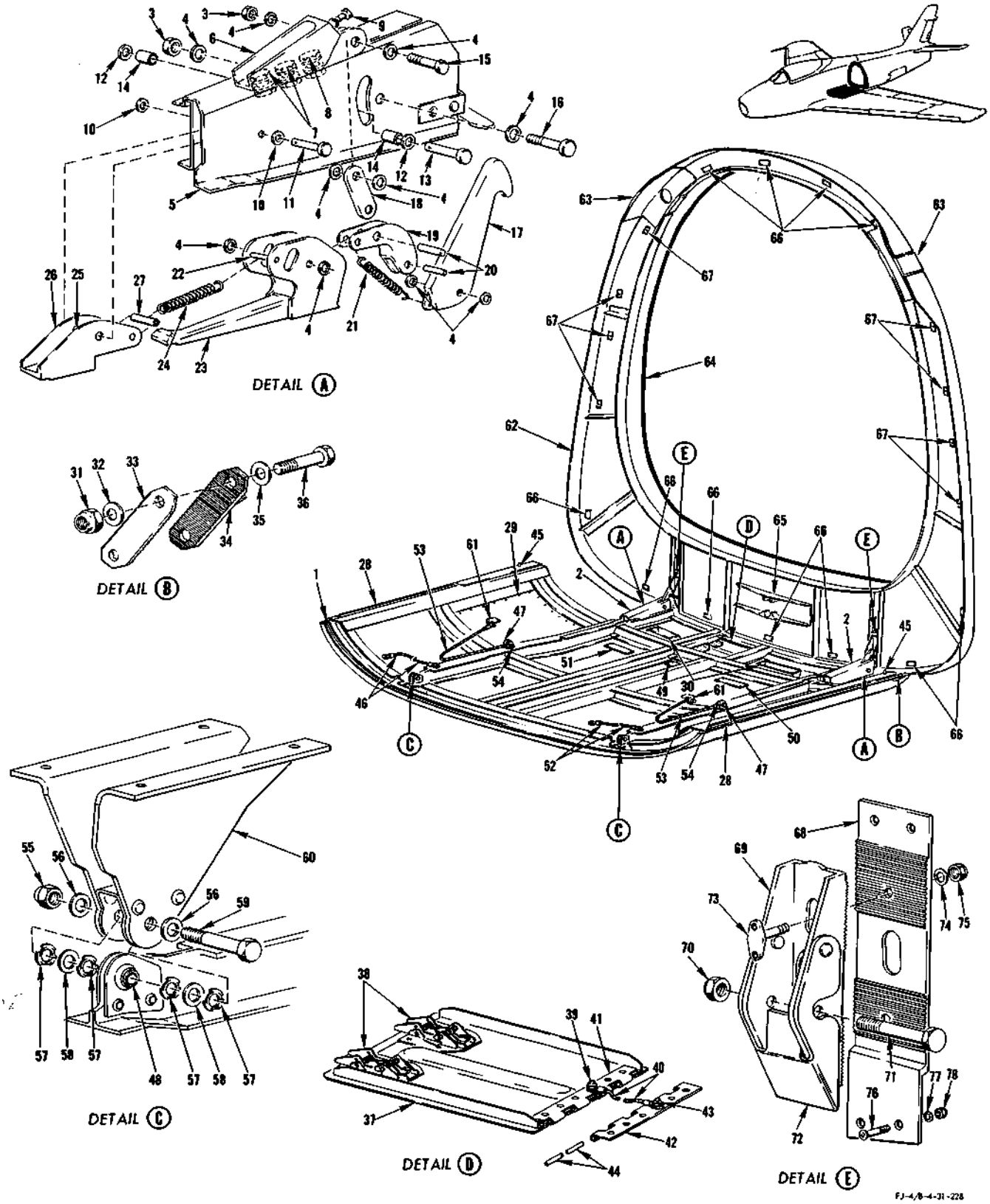

FIGURE 47 - ENGINE ACCESS DOOR ASSEMBLY

ENGINE ACCESS DOOR ASSEMBLY

FIGURE & INDEX NO.	PART NUMBER	1 2 3 4 5 6 7 NOMENCLATURE	UNITS PER ASSY.	USABLE ON CODE	S/C NO.
47-1	209-31010-151	DOOR ASSEMBLY, Engine access fuselage station 204.188 to station 236.063	1	GP	472
	209-31010-101	DOOR ASSEMBLY, Engine access fuselage station 204.188 to station 236.063	1	GQ	472
-2	209-315190-1	. RELEASE MECHANISM ASSEMBLY, Engine access door LH	1		
	209-315190-2	. RELEASE MECHANISM ASSEMBLY, Engine access door RH	1		
-3	AN320-4	. . NUT	2		
-4	2W18-416M	. . WASHER, Flat (NA) (89372)	10		
-5	209-31004-1	. . HOUSING, Engine access door release assembly of LH	1		
	209-31004-2	. . HOUSING, Engine access door release assembly of RH	1		
-6	209-315194	. . . STOP, Engine access door latch	1		
-7	NAS464P4A6	. . . BOLT	2		
	2W18-416	. . . WASHER, Flat (NA) (89372)	2		
	AN364-428	. . . NUT	2		
-8	NAS464P5A6	. . . BOLT	1		
	2W18-516	. . . WASHER, Flat (NA) (89372)	1		
	AN364-524	. . . NUT	1		
-9	209-31544	. . BOLT, Fuselage frame station 236.25 stop	1		
	2W18-416M	. . WASHER, Flat (NA) (89372)	2		
	AN365-428	. . NUT	2		
-10	2W18-4	. . WASHER, Flat (NA) (89372)	2		
-11	AN392-43	. . PIN	1		
-12	2W18-416	. . WASHER, Flat (NA) (89372)	2		
-13	209-315115	. . PIN, Engine access door release	1		
-14	4B19S4-5B	. . BUSHING, Press fit plain (NA) (89372)	2		
-15	NAS464P4-18	. . BOLT	1		
-16	NAS464P4-21	. . BOLT	1		
-17	209-315192	. . HOOK, Engine access door latch	1		
-18	209-315191	. . LINK, Engine access door latch	1		
-19	209-315193	. . CLEVIS, Engine access door latch	1		
-20	209-315195	. . PIN, Engine access door latch	2		
-21	209-315186	. . SPRING, Tension	1		
-22	79-022-094-1000	. . ROLLPIN (EN) (72962)	1		
-23	209-315196-1	. . HANDLE, Engine access door latch LH	1		
	209-315196-2	. . HANDLE, Engine access door latch RH	1		
-24	209-315183	. . SPRING, Tension	1		
-25	NAS42DD4-72A	. . SPACER	1		
-26	209-315188-1	. . LATCH ASSEMBLY, Engine access door release LH	1		
	209-315188-2	. . LATCH ASSEMBLY, Engine access door release RH	1		
-27	NAS42DD4-56	. . . SPACER	1		
-28	209-31046	. SEAL, Engine access door	2		
-29	209-31010-65	. DOOR, Engine access fuselage station 204.188 to station 236.063 door assembly	1	GQ	
	ATTACHING PARTS				
	AN509-10R10	. SCREW	34	GQ	
	3600-02	. NUT, Anchor (NUS) (80539)	28	GQ	
	22A5-02	. NUT, Anchor (EN) (72962)	6	GQ	
	---*---				
-30	209-315150	. DUCT ASSEMBLY, Fuselage station 230.75 lower	2		
-31	AN365-1032	. NUT	4	GQ	
-32	2W18-10	. WASHER, Flat (NA) (89372)	4	GQ	
-33	209-31068	. PLATE, Engine access door adjusting station 227.375	2	GQ	
-34	209-31069-1	. FITTING, Engine access door adjusting station 227.5 LH	1	GQ	
	209-31069-2	. FITTING, Engine access door adjusting station 227.5 RH	1	GQ	
-35	2W1-12-22-063	. WASHER, Plain (NA) (89372)	4	GQ	
-36	AN3-7A	. BOLT	4		
-37	209-31063	. DOOR ASSEMBLY, External power access	1		
-38	H-5000-081-081	. . LATCH (HWL) (83014)	2		
-39	AN509-8R9	. . SCREW	1		
	2W1AL8-12-40	. . WASHER, Plain (NA) (89372)	2		
	AN365-832	. . NUT	1		
-40	AN749-3-4	. . JUMPER	1		
-41	209-31063-7	. . HINGE, External power access door assembly	1		
-42	209-31010-41	. HINGE, Engine access fuselage station 204.188 to station 236.063 lower door assembly	1		
-43	AN364-832	. NUT	1		
	2W18-8	. WASHER, Flat (NA) (89372)	1		
	AN509-8R9	. SCREW	1		
-44	AN253-2-460	. PIN	1		
-45	209-31036	. PIN ASSEMBLY, Engine access door guide	2		
-46	AN749-3-6	. JUMPER	1		
	ATTACHING PARTS				
	AN520-10R7	. SCREW	2		
	2W1AL14-16-40	. WASHER, Plain (NA) (89372)	4		
	AN365-1032	. NUT	2		
	---*---				
-47	AN42-4A	. BOLT	2		
	2W18-10M	. WASHER, Flat (NA) (89372)	2		
	AN365-1032	. NUT	2		
-48	HSBG-6	. BEARING (HLF) (97613)	2		
-49	209-58304	. PLATE, Hydraulic ground test instruction	1		
-50	209-58305-3	. PLATE, Hydraulic flight control system data	1		
-51	209-58305-5	. PLATE, Hydraulic flight control system data	1		

ENGINE ACCESS DOOR ASSEMBLY

FIGURE & INDEX NO.	PART NUMBER	1 2 3 4 5 6 7 NOMENCLATURE	UNITS PER ASSY.	USABLE ON CODE	S/C NO.
47-52	AN749-3-6	. JUMPER	1		
	ATTACHING PARTS				
	AN520-10R5	. SCREW	2		
	2W1AL14-16-40	. WASHER, Plain (NA) (89372)	4		
	AN365-1032	. NUT	2		
	---*---				
-53	209-31067	CABLE ASSEMBLY, Engine access door	2		
	AN667-2	. TERMINAL	2		
-54	AN365-1032	NUT	4		
	2W18-10	WASHER, Flat (NA) (89372)	8		
	AN3-5A	BOLT	4		
-55	AN365-624	NUT	2		
-56	2W18-616M	WASHER, Flat (NA) (89372)	4		
-57	8102A	WASHER, Spring (BWA) (92830)	8		
-58	2W1C25-28-20	WASHER, Plain (NA) (89372)	4		
-59	AN6-20A	BOLT	2		
-60	209-315107-1	HINGE ASSEMBLY, Engine access door LH	1	GQ	
	209-315107-2	HINGE ASSEMBLY, Engine access door RH	1	GQ	
	209-315107-51	HINGE ASSEMBLY, Engine access door LH	1	GP	
	209-315107-52	HINGE ASSEMBLY, Engine access door RH	1	GP	
-61	209-31065	CLIP, Engine access door cable supporting upper	2		
-62	209-31537	FRAME ASSEMBLY, Fuselage station 236.25	1	Y	
	209-31537-101	FRAME ASSEMBLY, Fuselage station 236.25	1	LN	
	209-31537-201	FRAME ASSEMBLY, Fuselage station 236.25	1	FX	
	209-31537-151	FRAME ASSEMBLY, Fuselage station 236.25	1	FR	
-63	209-315104-3	. FITTING, Station 236.25 upper longeron frame splice LH	1		
	209-315104-4	. FITTING, Station 236.25 upper longeron frame splice RH	1		
-64	209-31537-53	. SEAL, Fuselage station 236.25 frame assembly	1		
-65	209-315141	. FITTING ASSEMBLY, Fuselage station 236.25 wishbone aft attaching	1		
-66	152-31519-5	. PIN, Fuselage station 236.25 canted station	11		
-67	152-31519-11	. PIN, Fuselage station 236.25 canted station	8		
-68	209-31047-1	. PLATE, Engine access door adjusting LH	1		
	209-31047-2	. PLATE, Engine access door adjusting RH	1		
	209-31096-11	. FITTING, Engine access door latch pin LH assembly of	1		
	209-31096-12	. FITTING, Engine access door latch pin RH assembly of	1		
-69	209-315185	. . RETAINER, Engine access door latch pin	1		
-70	AN364-524	. . NUT	1		
-71	NAS464-5A21	. . BOLT	1		
-72	209-31096-7	. . FITTING, Engine access door latch pin	1		
-73	209-31546	. STUD, Fuselage station 236.25 engine access door latch	4		
-74	2W18-416	. WASHER, Flat (NA) (89372)	4		
-75	AN365-428	. NUT	4		
-76	AN507-1032R10	. SCREW	8		
-77	2W18-10	. WASHER, Flat (NA) (89372)	8		
-78	AN365-1032	. NUT	8		

FRAME ASSEMBLY (FUS STA 131 TO 236.25)

FIGURE & INDEX NO.	PART NUMBER	1 2 3 4 5 6 7 NOMENCLATURE	UNITS PER ASSY.	USABLE ON CODE	S/C NO.
48-1	140-31936	PIN ASSEMBLY, Safety engine mount steady support (superseded by 194-315107 for future procurement)	1		
	194-315107	PIN, Engine mount steady support safety assembly of (supersedes 140-31936 for future procurement)	1		
-2	9C1-1-6	. CHAIN, Bead (NA) (89372)	1		
-3	140-31936-5	. CLIP, Safety engine mount steady support pin assembly (used on 140-31936 only)	1		
	194-315107-5	. CLIP, Engine mount steady support safety assembly of (used on 194-315107 only)	1		
-4	2W1-10-10-40	. WASHER, Plain (NA) (89372)	1		
	4S4-5-8	. SPACER, Rivet (NA) (89372)	1		
	134-31925	. PIN, Safety	1		
-5	140-31935	PIN ASSEMBLY, Engine mount steady support (superseded by 171-31935 for future procurement)	1		
	161-31935	PIN ASSEMBLY, Engine mount steady support (supersedes 140-31935 and is superseded by 161-31935-21 for future procurement)	1		
	161-31935-21	PIN ASSEMBLY, Engine mount steady support (supersedes 161-31935 for future procurement)	1		
-6	209-31561	SUPPORT ASSEMBLY, Fuselage station 190 to station 201.5 engine	1		
	209-31561-3	. SUPPORT, Fuselage station 190 to station 201.5 engine support assembly	1		
-7	4B20S8-012	. BUSHING, Press fit flanged (NA) (89372)	2		
	3600-82	. NUT, Anchor (EN) (72962)	2		
	AN509-8R15	SCREW	2		
	194-31562-11	FITTING ASSEMBLY, Fuselage station 236.25 main engine trunnion support RH	1		
	194-31562-10	FITTING ASSEMBLY, Fuselage station 236.25 main engine trunnion support LH	1		
-8	6810-064	. RETAINER, Bolt one lug steel (NUS) (80539)	1		
-9	140-42047	. BOLT, Engine main trunnion attachment support assembly	1		
-10	194-31563-5	. FITTING, Fuselage station 236.25 main engine trunnion support LH	1		
	194-31563-6	. FITTING, Fuselage station 236.25 main engine trunnion support RH	1		
-11	AN396-27	. PIN	1		
-12	181-31564-3	. HINGE, Engine main trunnion fuselage attaching fitting	1		
-13	165-31924-10	. NUT ASSEMBLY, Engine trunnion support locking	1		
	134-31908	. . NUT, Lower engine mount socket to upper socket assembly attaching	1		
	181-315169	. . RING, Drop chain attaching	1		
	165-31926	. . CABLE ASSEMBLY, Engine support locking nut drop	1		
-14	181-31479-11	SHELF ASSEMBLY, Fuselage station 132.562 to station 144.812 intermediate RH	1	ET	366
	181-31479-31	SHELF ASSEMBLY, Fuselage station 132.562 to station 144.812 intermediate RH	1	FR	
-15	98292-1-.100	. STUD (UC) (61864)	3		
	99836	. PIN (UC) (61864)	3		
	99947-P-.130	. RECEPTACLE (UC) (61864)	3		
-16	98292-2-.160	. STUD (UC) (61864)	1		
	99836	. PIN (UC) (61864)	1		
	99947-P-.130	. RECEPTACLE (UC) (61864)	1		
-17	98292-1-.130	. STUD (UC) (61864) (used on 181-31479-31 only)	1		
	99836	. PIN (UC) (61864) (used on 181-31479-31 only)	1		
	99947-P-.130	. RECEPTACLE (UC) (61864) (used on 181-31479-31 only)	1		
-18	98292-1-.120	. STUD (UC) (61864)	1		
	99836	. PIN (UC) (61864)	1		
	99947-P-.130	. RECEPTACLE (UC) (61864)	1		
-19	209-314135-101	DECK ASSEMBLY, Canted station 115 to station 170 upper	1	Y	
	209-314135-201	DECK ASSEMBLY, Canted station 115 to station 170 upper	1	FS	
	209-314135-301	DECK ASSEMBLY, Canted station 115 to station 170 upper	1	FR	
-20	209-31837	. SUPPORT, Cockpit enclosure track	1		
-21	209-31838	. TRACK, Cockpit enclosure canopy aft	1		
	ATTACHING PARTS				
-22	NAS144-23	. BOLT	1		
-23	NAS144-24	. BOLT	1		
-24	NAS144-25	. BOLT	1		
-25	NAS144-26	. BOLT	1		
-26	NAS144-27	. BOLT	1		
-27	NAS144-28	. BOLT	1		
-28	NAS144-29	. BOLT	1		
-29	NAS144-30	. BOLT	1		
-30	NAS144-31	. BOLT	1		
	181-318127	. SPACER, Cockpit enclosure canopy track attaching	9		
	2W18-416	. WASHER, Flat (NA) (89372)	9		
	AN365-428	. NUT	9		
	---*---				
-31	209-31894-3	. RETAINER, Cockpit enclosure canopy hold-down shoe	2		
	ATTACHING PARTS				
-32	AN365-428	. NUT	4		
-33	2W1-16-22-078	. WASHER, Plain (NA) (89372)	4		
-34	2W18-416	. WASHER, Flat (NA) (89372)	4		
-35	AN509-416R13	. SCREW	4		
	---*---				
-36	209-315105	NUT, Fuselage station 234.625 hoisting attaching	2		
-37	209-31539-3	STUD, Fuselage station 236.25 forward longeron break	4		
-38	209-31550	TRACK ASSEMBLY, Fuselage station 190 to station 236.25 front engine mount	1		
	209-31550-3	. TRACK, Fuselage station 190 to station 236.25 front engine mount track assy.	1		
	209-31525	RIB ASSEMBLY, Fuselage station 227.5 fairing aft end	1	Y	330
-39	209-31525-13	. SEAL, Fuselage station 227.5 fairing aft end rib assembly	1	Y	
	209-31526	FRAME, Fuselage station 227.5 fairing assembly of	1	FS	330
	209-31526-11	FRAME, Fuselage station 227.5 fairing assembly of	1	FR	

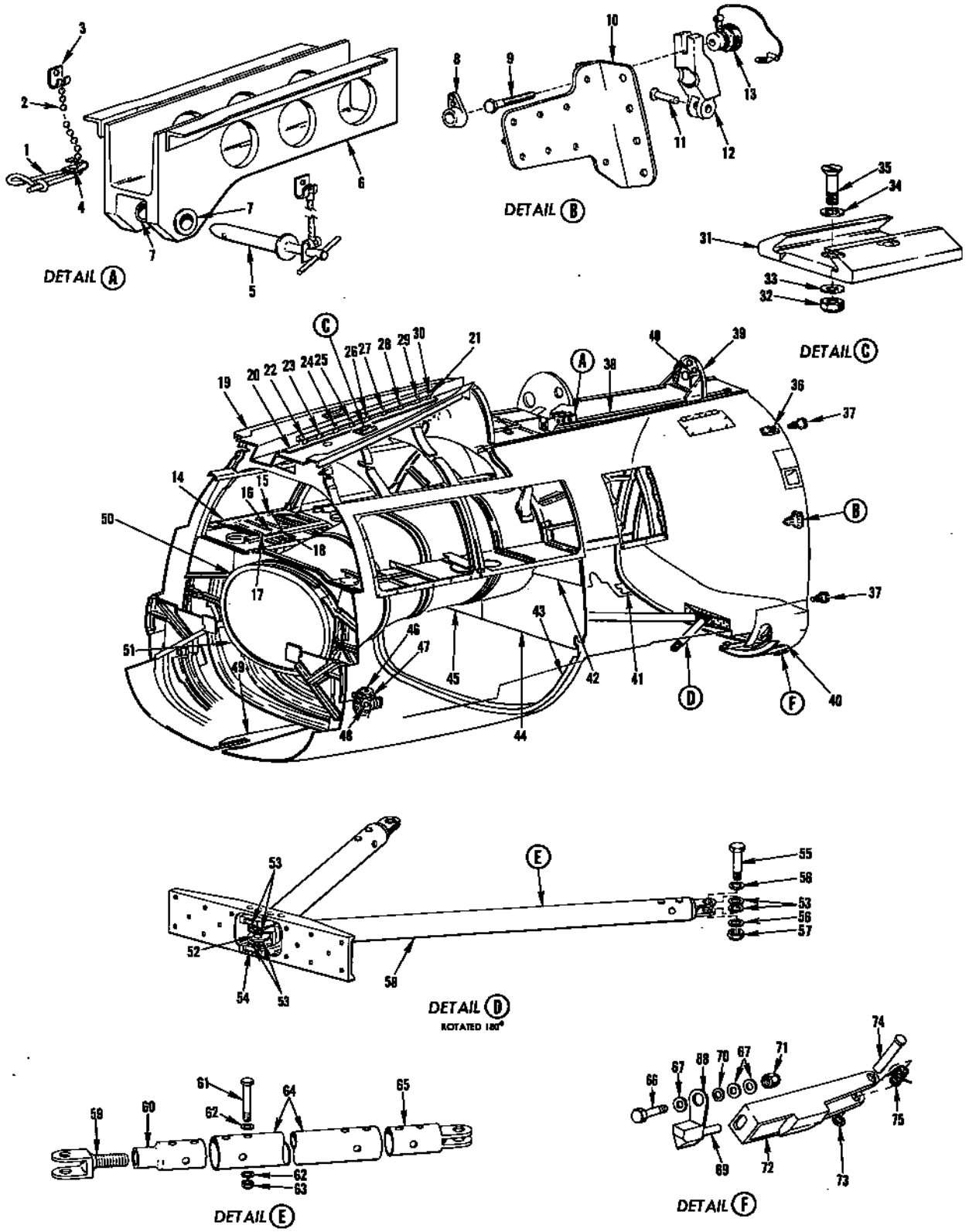

FIGURE 48 - FRAME ASSEMBLY (FUS STA 131 TO 236.25)

FRAME ASSEMBLY (FUS STA 131 TO 236.25)

FIGURE & INDEX NO.	PART NUMBER	1 2 3 4 5 6 7 NOMENCLATURE	UNITS PER ASSY.	USABLE ON CODE	S/C NO.
48-40	NAS221-6	. SCREW	1	Z	
	2W1AL14-14-16	. WASHER, Plain (NA) (89372)	3	Z	
	AN751A2	. JUMPER	1	Z	
	AN365-1032	. NUT	1	Z	
-41	209-31586-7	DOUBLER, Fuselage station 222.25 to station 236.25 lower skin assembly (commercially pure titanium)	2		
-42	209-31433-5	DOUBLER, Fuselage station 180.906 intermediate side LH frame assembly (titanium alloy sheet)	1		
-43	209-31557	FRAME ASSEMBLY, Fuselage canted station 172	1		
-44	209-31433-3	WEB, Fuselage station 180.906 intermediate side LH frame assembly (titanium alloy sheet)	1		
-45	209-31434-3	WEB, Fuselage station 180.906 intermediate side RH frame assembly (titanium alloy sheet)	1	Y	
	209-31434-33	WEB, Fuselage station 180.906 intermediate side RH frame assembly (titanium alloy sheet)	1	Z	
-46	209-31450-5	LINK, Fuselage station 131 wing and catapult attaching fitting to longeron	2		
	1191-4CNx-3/8	. INSERT, Heli-coil (AF) (91767)	10		
	209-31450-3	. LINK, Fuselage station 131 wing and catapult attaching fitting to longeron	1		
-47	4B20M-S16-110	BUSHING, Press fit flanged (NA) (89372)	1		
-48	209-314120	BUSHING, Fuselage station 131 lower longeron attaching fitting	1		
-49	209-31400	PLATE, Fuselage station 124.188 to station 172 keel	1		
-50	209-31415	DUCT ASSEMBLY, Fuselage station 131 to station 180.906 upper	1	FV	431
	209-31415-101	DUCT ASSEMBLY, Fuselage station 131 to station 180.906 upper	1	FH	431
	209-31415-201	DUCT ASSEMBLY, Fuselage station 131 to station 180.906 upper	1	FR	431
-51	209-31416	DUCT ASSEMBLY, Fuselage station 131 to station 180.90 lower	1	ET	
	209-31416-101	DUCT ASSEMBLY, Fuselage station 131 to station 180.90 lower	1	FR	
-52	209-315140	BOLT, Aft tie rod attaching	1		
-53	2W17-616	WASHER, Corrosion-resistant steel (NA) (89372)	AR		
	2W17-616L	WASHER, Corrosion-resistant steel (NA) (89372)	AR		
-54	209-315146	NUT, Aft tie rod attaching	1		
-55	AN6-12A	BOLT	2		
-56	2W18-616	WASHER, Flat (NA) (89372)	4		
-57	AN364-624	NUT	2		
-58	209-315142	TUBE ASSEMBLY, Tie rod structure	2		
-59	209-315144	. CLEVIS, Aft tie rod	1		
-60	209-315134	. BUSHING, Tie rod adjusting	1		
-61	AN24-32A	. BOLT	6		
-62	2W18-416	. WASHER, Flat (NA) (89372)	12		
-63	AN364-428	. NUT	6		
-64	209-315145	. TUBE, Tie rod structure	1		
-65	209-315143	. CLEVIS, Forward tie rod	1		
-66	AN4-7A	BOLT	1		
-67	2W18-416	WASHER, Flat (NA) (89372)	3		
-68	209-31070-1	FITTING ASSEMBLY, Engine access door adjusting station 228.637 LH	1		
	209-31070-2	FITTING ASSEMBLY, Engine access door adjusting station 238.637 RH	1		
	209-31070-3	. FITTING, Engine access door adjusting station 228.637 LH fitting assembly	1		
	209-31070-4	. FITTING, Engine access door adjusting station 228.637 RH fitting assembly	1		
-69	209-31070-5	. PIN, Engine access door adjusting station 228.637 fitting assembly	1		
-70	NAS43-4-9	SPACER	1		
-71	AN365-428	NUT	1		
-72	209-31073-1	HANDLE, Engine access door outboard latch LH	1		
	209-31073-2	HANDLE, Engine access door outboard latch RH	1		
-73	2W18-10M	WASHER, Flat (NA) (89372)	5		
-74	AN391-41	PIN	1		
-75	209-31071	SPRING, Engine access door outboard latch	1		

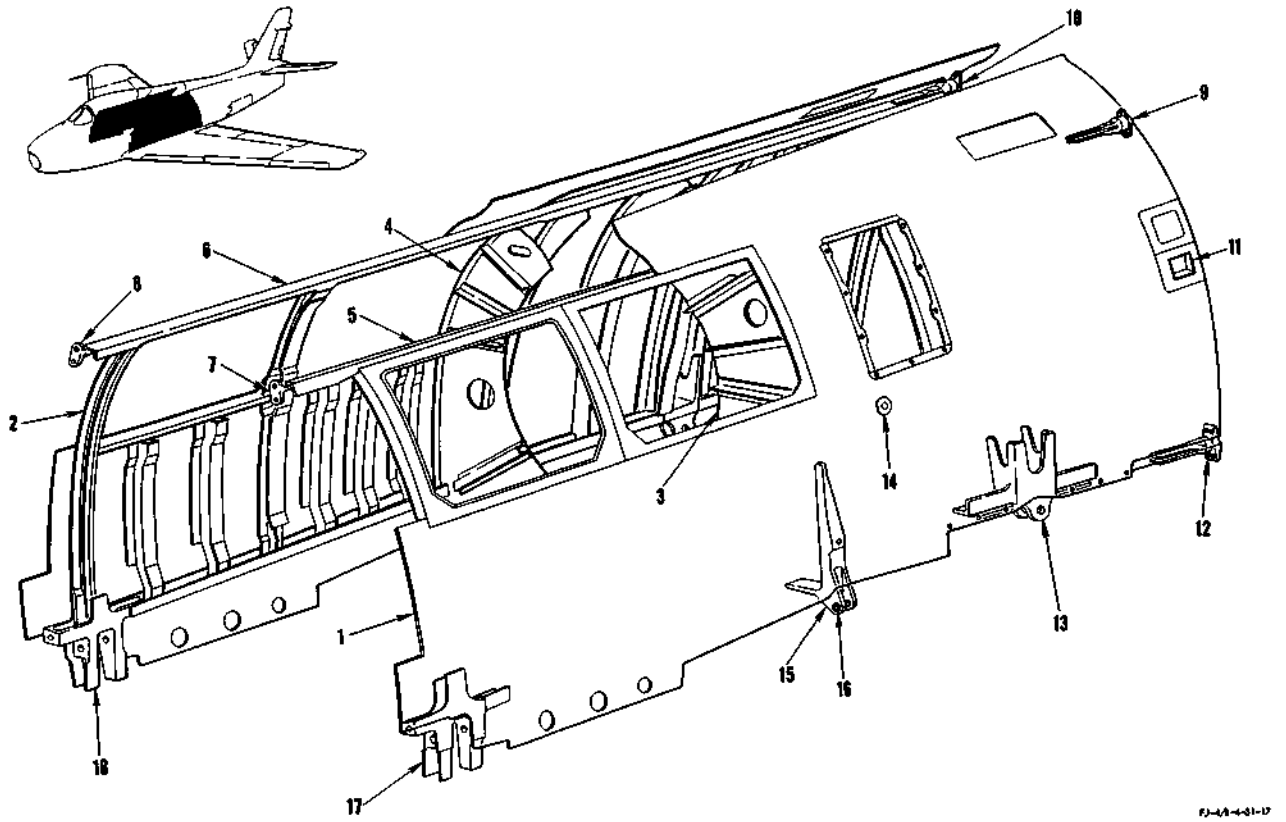

FIGURE 49 - SIDE PANEL ASSEMBLY (FUS STA 131 TO 236.25)

FIGURE & INDEX NO.	PART NUMBER	1 2 3 4 5 6 7 NOMENCLATURE	UNITS PER ASSY.	USABLE ON CODE	S/C NO.
49-1	209-31413-1	PANEL ASSEMBLY, Fuselage station 131 to station 236.25 side LH	1	ET	
	209-31413-51	PANEL ASSEMBLY, Fuselage station 131 to station 236.25 side LH	1	FR	
-2	209-31413-2	PANEL ASSEMBLY, Fuselage station 131 to station 236.25 side RH	1	Y	
	209-31413-52	PANEL ASSEMBLY, Fuselage station 131 to station 236.25 side RH	1	LN	
	209-31413-62	PANEL ASSEMBLY, Fuselage station 131 to station 236.25 side RH	1	FX	
	209-31413-72	PANEL ASSEMBLY, Fuselage station 131 to station 236.25 side RH	1	FR	
-3	209-31433	. FRAME ASSEMBLY, Fuselage station 180.906 intermediate side LH (see figure 48 for additional breakdown)	1	ET	
	209-31433-101	. FRAME ASSEMBLY, Fuselage station 180.906 intermediate side LH (see figure 48 for additional breakdown)	1	FR	
-4	209-31434	. FRAME ASSEMBLY, Fuselage station 180.906 intermediate side RH (see figure 48 for additional breakdown)	1	Y	
	209-31434-51	. FRAME ASSEMBLY, Fuselage station 180.906 intermediate side RH (see figure 48 for additional breakdown)	1	FS	
	209-31434-61	. FRAME ASSEMBLY, Fuselage station 180.906 intermediate side RH (see figure 48 for additional breakdown)	1	FR	
-5	209-31517-1	. LONGERON ASSEMBLY, Fuselage station 120.607 to station 236.25 upper LH	1		
-6	209-31517-2	. LONGERON ASSEMBLY, Fuselage station 120.607 to station 236.25 upper RH	1		
-7	181-31419-1	. . FITTING, Fuselage station 120.601 upper longer aft	1		
-8	181-31419-2	. . FITTING, Fuselage station 120.601 upper longeron aft	1		
-9	209-31573-3	. FITTING, Fuselage station 236.25 upper longeron forward LH	1		
-10	209-31573-4	. FITTING, Fuselage station 236.25 upper longeron forward RH	1		
-11	209-315114-1	. DUCT ASSEMBLY, Fuselage station 230.062 to station 236.25 trunnion cooling LH	1		
	209-315114-2	. DUCT ASSEMBLY, Fuselage station 230.062 to station 236.25 trunnion cooling RH	1		
-12	209-31532-3	. FITTING, Fuselage station 236.25 lower longeron forward LH	1		
	209-31532-4	. FITTING, Fuselage station 236.25 lower longeron forward RH	1		
-13	209-31509-11	. FITTING ASSEMBLY, Wing to fuselage attachment station 209.8 LH	1		
	209-31509-12	. FITTING ASSEMBLY, Wing to fuselage attachment station 209.8 RH	1		
	4B20M-S18-016	. . BUSHING, Press fit flanged (NA) (89372)	2		
-14	A6912-831-1	. SPEED NUT, Patch assembly (TIN) (78553)	1		
	209-31413-39	. SEAL, Fuselage station 131 to station 236.25 side panel assembly	1		
-15	209-31580-5	. FITTING, Wing to fuselage attachment station 180.906	1		
	209-31580-6	. FITTING, Wing to fuselage attachment station 180.906	1		
-16	4B20S10-013	. . BUSHING, Press fit flanged (NA) (89372)	2		
-17	209-31410-3	. FITTING, Wing to fuselage attachment fuselage station 131 LH	1		
-18	209-31410-4	. FITTING, Wing to fuselage attachment fuselage station 131 RH	1		

WINDSHIELD AND FRAME ASSEMBLY

FIGURE & INDEX NO.	PART NUMBER	1 2 3 4 5 6 7 NOMENCLATURE	UNITS PER ASSY.	USABLE ON CODE	S/C NO.
50	181-31852-151	FRAME ASSEMBLY, Cockpit enclosure windshield complete	1	AS	
	181-31852-301	FRAME ASSEMBLY, Cockpit enclosure windshield complete	1	CZ	
	181-31852-401	FRAME ASSEMBLY, Cockpit enclosure windshield complete	1	CF	
	181-31852-451	FRAME ASSEMBLY, Cockpit enclosure windshield complete	1	JD	
	181-31852-461	FRAME ASSEMBLY, Cockpit enclosure windshield complete	1	FR	
-1	181-31869	. RETAINER, Cockpit enclosure windshield armor glass lower	1		
	ATTACHING PARTS				
-2	7S16CN10-8	. SCREW, 100° flush head corrosion-resistant (NA) (89372)	6		
	---*---				
	181-31891	. GLASS ASSEMBLY, Windshield armor	1		
-3	181-31854-11	. . GLASS, Windshield armor (supersedes 181-31854 for future procurement)	1		
-4	181-31891-3	. . SEAL, Windshield armor glass assembly LH	1		
	181-31891-4	. . SEAL, Windshield armor glass assembly RH	1		
-5	181-31891-5	. . SEAL, Windshield armor glass assembly LH	1		
	181-31891-6	. . SEAL, Windshield armor glass assembly RH	1		
-6	181-31867	. FITTING, Cockpit enclosure windshield armor glass retainer	1		
	ATTACHING PARTS				
-7	7S16CN10-13	. SCREW, 100° flush head corrosion-resistant (NA) (89372)	3		
	---*---				
-8	181-31888-2	. RETAINER, Cockpit enclosure windshield side armor outer upper RH	1		
	ATTACHING PARTS				
	7S16CN10-13	. SCREW, 100° flush head corrosion-resistant (NA) (89372)	2		
	7S16CN10-12	. SCREW, 100° flush head corrosion-resistant (NA) (89372)	2		
	79-1669-4-02	. NUT, Shank (EN) (72962)	2		
	79-1669-1-02	. NUT, Shank (EN) (72962)	2		
	---*---				
-9	181-31877-2	. RETAINER, Cockpit enclosure windshield side armor glass outer upper RH	1		
	ATTACHING PARTS				
	7S16CN10-12	. SCREW, 100° flush head corrosion-resistant (NA) (89372)	14		
	2W1AL16-16-32	. WASHER, Plain (NA) (89372)	14		
	79-1669-1-02	. NUT, Shank (EN) (72962)	14		
	---*---				
-10	181-31890-2	. RETAINER, Cockpit enclosure windshield side glass outer lower LH	1		
	ATTACHING PARTS				
	79-1669-3-02	. NUT, Shank (EN) (72962)	2		
	79-1669-1-02	. NUT, Shank (EN) (72962)	2		
	79-1669-2-02	. NUT, Shank (EN) (72962)	20	ET	
	79-1669-2-02	. NUT, Shank (EN) (72962)	16	FR	
	79-1669-4-02	. NUT, Shank (EN) (72962)	4	FR	
	79-1669-1-02	. NUT, Shank (EN) (72962)	2		
	7S16CN10-12	. SCREW, 100° flush head corrosion-resistant (NA) (89372)	26	ET	
	7S16CN10-12	. SCREW, 100° flush head corrosion-resistant (NA) (89372)	22	FR	
	7S16CN10-13	. SCREW, 100° flush head corrosion-resistant (NA) (89372)	4	FR	
	---*---				
-11	181-31852-9	. SEAL, Cockpit enclosure windshield frame assembly	1		
-12	181-31855-2	. GLASS, Windshield side panel RH	1		
-13	181-31852-7	. SEAL, Cockpit enclosure windshield frame assembly	1		
-14	181-31852-21	. SEAL, Cockpit enclosure windshield frame assembly	2		
-15	181-31852-13	. SEAL, Cockpit enclosure windshield frame assembly	1		
	181-31852-15	. SEAL, Cockpit enclosure windshield frame assembly	1		
-16	181-31852-11	. SEAL, Cockpit enclosure windshield frame assembly	1		
	181-31852-17	. SEAL, Cockpit enclosure windshield frame assembly	1		
	181-31852-19	. SEAL, Cockpit enclosure windshield frame assembly	1		
-17	181-31852-6	. SEAL, Cockpit enclosure windshield frame assembly	1		
-18	181-31852-4	. SEAL, Cockpit enclosure windshield frame assembly	1		
-19	181-31853-151	. FRAME ASSEMBLY, Cockpit enclosure windshield	1	AS	
	181-31853-301	. FRAME ASSEMBLY, Cockpit enclosure windshield	1	CZ	
	181-31853-401	. FRAME ASSEMBLY, Cockpit enclosure windshield	1	CF	
	181-31853-551	. FRAME ASSEMBLY, Cockpit enclosure windshield	1	JD	
	181-31853-601	. FRAME ASSEMBLY, Cockpit enclosure windshield	1	FR	
-20	209-31890	. . TIE ROD ASSEMBLY, Cockpit enclosure fuselage station 65.75 windshield side glass attaching beam	1	Y	266
	ATTACHING PARTS				
	7S14CN428-12	. . SCREW, Round head corrosion-resistant (NA) (89372)	2	Y	266
	2W1AL17-16-64	. . WASHER, Plain (NA) (89372)	4	Y	266
	AN363C428	. . NUT	2	Y	266
	---*---				
	209-31890-3	. . . TUBE, Cockpit enclosure fuselage station 65.75 windshield side glass attaching beam tie rod assembly	1		
	1F3A5L	. . . FILLER, Tube (NA) (89372)	2		
	209-31848	. . TIE ROD, Cockpit enclosure fuselage station 66 windshield side glass attaching beam assembly of	1	Z	
	ATTACHING PARTS				
	7S14CN1032-12	. . SCREW, Round head corrosion-resistant (NA) (89372)	4	Z	
	2W1AL13-14-64	. . WASHER, Plain (NA) (89372)	8	Z	
	AN363C1032	. . NUT	4	Z	
	---*---				
	209-31848-3	. . . TUBE, Cockpit enclosure fuselage station 66 windshield side glass attaching beam assembly of	1		
	209-31848-5	. . . FILLER, Cockpit enclosure fuselage station 66 windshield side glass attaching beam assembly of	2		
-21	181-31856	. . BOW ASSEMBLY, Cockpit enclosure windshield	1		
	181-31856-3	. . . BOW, Cockpit enclosure windshield bow assembly	1		

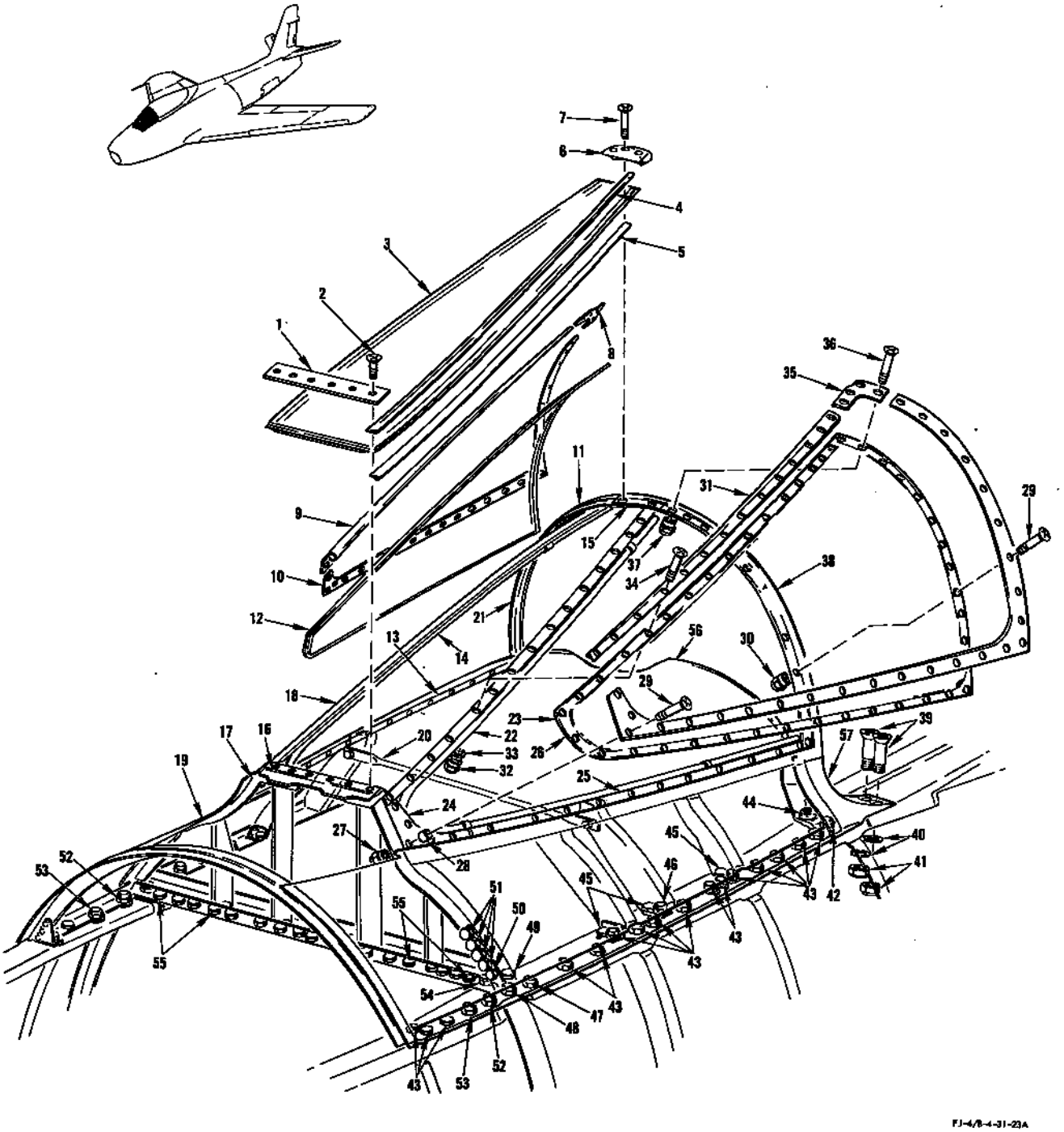

FJ-4/B-4-31-23A

FIGURE 50 - WINDSHIELD AND FRAME ASSEMBLY

FRAME ASSEMBLY

FIGURE & INDEX NO.	PART NUMBER	1 2 3 4 5 6 7 NOMENCLATURE	UNITS PER ASSY.	USABLE ON CODE	S/C NO.
53	209-31803	FRAME ASSEMBLY, Cockpit enclosure canopy complete (see figure 52 for next assembly)	1		
-1	209-31814-1	. SKIRT ASSEMBLY, Cockpit enclosure canopy LH	1		
	209-31814-2	. SKIRT ASSEMBLY, Cockpit enclosure canopy RH	1		
-2	181-31809-5	. . FITTING ASSEMBLY, Cockpit enclosure canopy front truck LH	1		
	181-31809-6	. . FITTING ASSEMBLY, Cockpit enclosure canopy front truck RH	1		
	ATTACHING PARTS				
-3	AN3-6A	. . BOLT	4		
-4	2W18-10L	. . WASHER, Flat (NA) (89372)	4		
-5	AN365-1032	. . NUT	2		
-6	3610-02	. . NUT, Anchor (NUS) (80539)	2		
	---*---				
-7	209-31844-1	. . BRACKET, Cockpit enclosure canopy rear latch roller LH	1		
	209-31844-2	. . BRACKET, Cockpit enclosure canopy rear latch roller RH	1		
-8	AN365-1032	. . NUT	2		
-9	2W18-10L	. . WASHER, Flat (NA) (89372)	6		
-10	AN3-5A	. . BOLT	2		
-11	209-31849	. . PLUG, Cockpit enclosure canopy defrost air manifold forward end	1		
	209-31855-1	. . BEAM ASSEMBLY, Cockpit enclosure canopy forward LH	1		
	209-31855-2	. . BEAM ASSEMBLY, Cockpit enclosure canopy forward RH	1		
-12	209-31857-1	. . . PLUG, Cockpit enclosure canopy defrost air manifold aft end LH	1		
	209-31857-2	. . . PLUG, Cockpit enclosure canopy defrost air manifold aft end RH	1		
-13	209-31896	. . FITTING, Canopy external release-handle pivot (used on LH side only)	1		
-14	3600-048	. . . NUT, Anchor (NUS) (80539)	2		
-15	209-31868	. FITTING, Cockpit enclosure canopy aft truck support	1		
-16	AN365-524	. NUT	4		
-17	2W18-516M	. WASHER, Flat (NA) (89372)	6		
-18	AN5-7A	. BOLT	4		
-19	AN365-428	. NUT	2		
-20	2W18-416	. WASHER, Flat (NA) (89372)	2		
-21	AN509-416R14	. SCREW	2		
-22	209-54014	. ACTUATOR, Canopy switch electrical	1		
-23	209-54346	. BRACKET, Canopy disconnect electrical	1		
-24	151-31877-20	. REEL ASSEMBLY, Ejection gun safety release	1		
-25	AN515-6R40	. . SCREW	1		
-26	NAS43DD1-128	. . SPACER	1		
-27	AN960D6	. . WASHER	1		
-28	AN365-632	. . NUT	1		
	161-31877	. . GUARD ASSEMBLY, Canopy ejection gun safety release reel	1		
-29	161-31877-3	. . . GUARD, Canopy ejection gun safety release reel guard assembly	2		
-30	AN515-6R40	. . . SCREW	2		
-31	NAS43DD1-133	. . . SPACER	2		
-32	AN960D6	. . . WASHER	2		
-33	AN365-632	. . . NUT	2		
-34	151-31877-11	. . BRACKET, Ejection gun safety release reel assembly LH side	1		
-35	151-31877-5	. . BEARING, Ejection gun safety release reel assembly	1		
-36	151-31877-12	. . BRACKET, Ejection gun safety release reel assembly RH side	1		
-37	151-31877-7	. . BEARING, Ejection gun safety release reel assembly	1		
-38	144-71059-5	. . SHAFT ASSEMBLY, Sense antenna reel	1		
-39	144-71056	. . . SPRING, Sense antenna reel	1		
-40	151-52502-5	. . DRUM, Ejection gun release operating (superseded by 151-52502-7 for future procurement)	1		
	151-52502-7	. . DRUM, Ejection gun release operating (supersedes 151-52502-5 for future procurement)	1		
-41	NAS221-10	. . SCREW	3		
-42	AN365-1032	. . NUT	3		
	181-53048-101	. CABLE ASSEMBLY, Ejection gun pin release	1		
	AN664C2	. . TERMINAL	1		
	AN667-2	. . TERMINAL	1		
	181-53048-9	. . SLEEVE, Ejection gun pin release cable assembly	1		
-43	AN393-7	. . PIN	1		
-44	181-53048-7	. . CABLE, Ejection gun pin release cable assembly	1		
-45	140-31878	. . STOP ASSEMBLY, Ejection gun release	1		
-46	AN3-4A	. BOLT	2		
-47	AN3-3A	. BOLT	2		
-48	AN3-5A	. BOLT	2		
-49	2W18-10M	. WASHER, Flat (NA) (89372)	12		
-50	AN365-1032	. NUT	6		
-51	209-31828	. HANDLE ASSEMBLY, Cockpit enclosure canopy manual operating (see figure 54 for release mechanism)	1		
-52	4B19S6-027	. . BUSHING, Press fit plain (NA) (89372)	1		
-53	4B19S3-009	. . BUSHING, Press fit plain (NA) (89372)	1		
-54	AN4H16A	. BOLT	2		
-55	2W18-416	. WASHER, Flat (NA) (89372)	2		
-56	4B21S4-103	. BUSHING, Spacer (NA) (89372)	2		
-57	209-31803-31	. DOUBLER, Cockpit enclosure canopy complete forward frame assembly	1		
-58	2W1AL24-32-32	. WASHER, Plain (NA) (89372)	3		
-59	AN392-11	. PIN	1		
-60	NAS42DD4-6	. SPACER	1		
-61	2W18-4	. WASHER, Flat (NA) (89372)	1		
-62	181-14691	. SPRING, Tension	1		
-63	AN3H14A	. BOLT	1		
-64	209-31803-29	. DOUBLER, Cockpit enclosure canopy complete forward frame assembly	1		

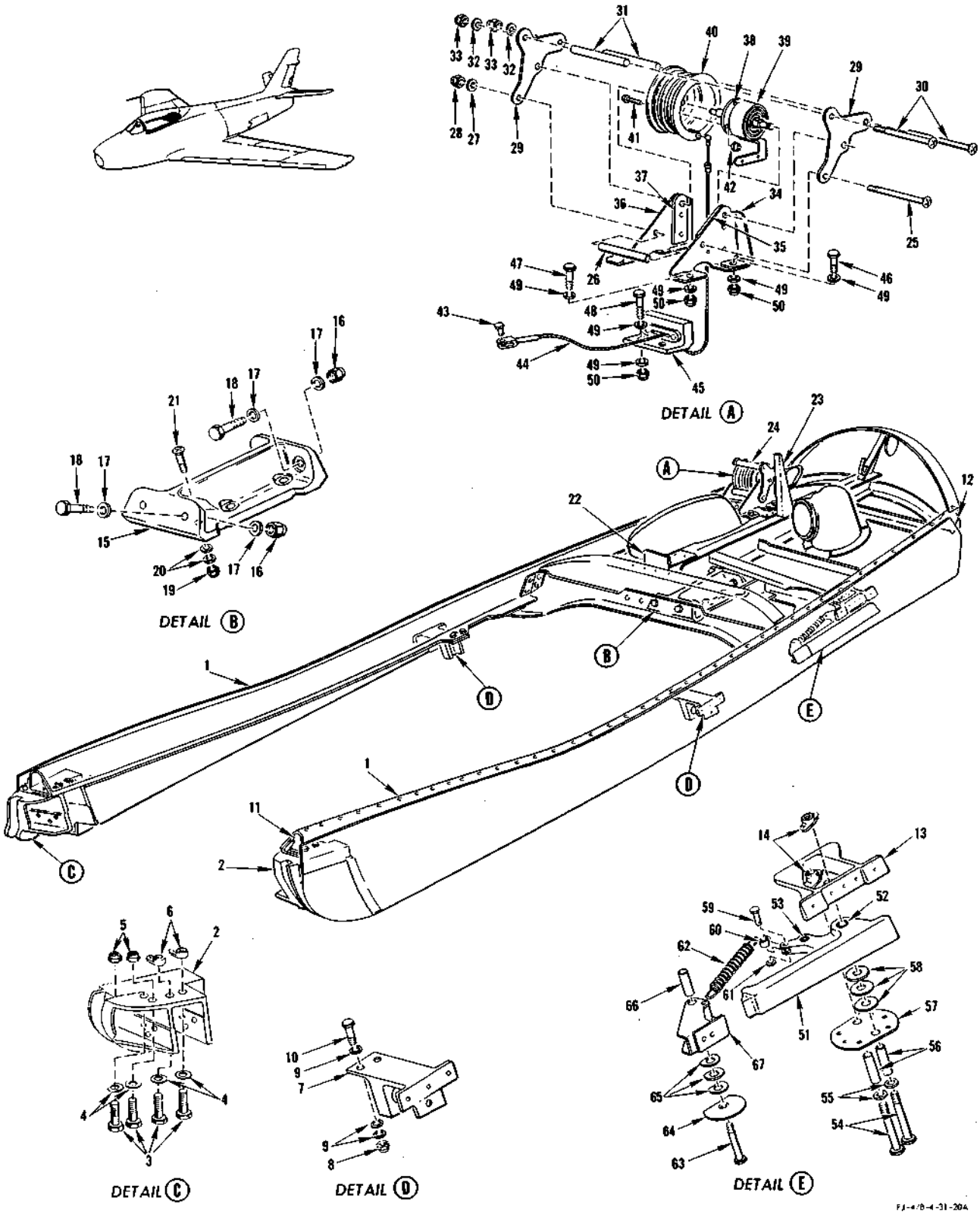

FIGURE 53 - FRAME ASSEMBLY

WINDSHIELD AND FRAME ASSEMBLY

FIGURE & INDEX NO.	PART NUMBER	1	2	3	4	5	6	7	NOMENCLATURE	UNITS PER ASSY.	USABLE ON CODE	S/C NO.
50	3600-2-02	.	.	.					NUT, Anchor (NUS) (80539)	3		
-22	181-31852-3	.							SEAL, Cockpit enclosure windshield frame assembly	1		
-23	181-31855-1	.							GLASS, Windshield side panel LH	1		
-24	181-31852-5	.							SEAL, Cockpit enclosure windshield frame assembly	1		
-25	181-31852-7	.							SEAL, Cockpit enclosure windshield frame assembly	2		
-26	181-31890-1	.							RETAINER, Cockpit enclosure windshield side glass outer lower LH	1		
	ATTACHING PARTS											
-27	79-1669-3-02	.							NUT, Shank (EN) (72962)	2		
	79-1669-1-02	.							NUT, Shank (EN) (72962)	2		
-28	NAS43DD4-24	.							SPACER	1		
-29	7S16CN10-12	.							SCREW, 100° flush head corrosion-resistant (NA) (89372)	26		
	7S16CN10-12	.							SCREW, 100° flush head corrosion-resistant (NA) (89372)	22		
	7S16CN10-13	.							SCREW, 100° flush head corrosion-resistant (NA) (89372)	4		
-30	79-1669-2-02	.							NUT, Shank (EN) (72962)	20	ET	
	79-1669-2-02	.							NUT, Shank (EN) (72962)	16		
	79-1669-4-02	.							NUT, Shank (EN) (72962)	4		
	79-1669-1-02	.							NUT, Shank (EN) (72962)	2		
	---*---											
-31	181-31877-1	.							RETAINER, Cockpit encl windshield side and armor glass outer upper LH	1		
	ATTACHING PARTS											
-32	79-1669-1-02	.							NUT, Shank (EN) (72962)	14		
-33	2W1AL16-16-32	.							WASHER, Plain (NA) (89372)	14		
-34	7S16CN10-12	.							SCREW, 100° flush head corrosion-resistant (NA) (89372)	14		
	---*---											
-35	181-31888-1	.							RETAINER, Cockpit encl windshield side and armor glass outer upper LH	1		
	ATTACHING PARTS											
-36	7S16CN10-13	.							SCREW, 100° flush head corrosion-resistant (NA) (89372)	2		
	7S16CN10-12	.							SCREW, 100° flush head corrosion-resistant (NA) (89372)	2		
-37	79-1669-4-02	.							NUT, Shank (EN) (72962)	2		
	79-1669-1-02	.							NUT, Shank (EN) (72962)	2		
	---*---											
-38	181-31852-9	.							SEAL, Cockpit enclosure windshield frame assembly	2		
-39	AN509-10-16								SCREW	4		
-40	AN960D10								WASHER	4		
-41	AN365-1032								NUT	4		
-42	AN365-428								NUT	2		
	AN960D428								WASHER	4		
	AN4-10A								BOLT	2		
-43	AN3-5A								BOLT	28	RL	
	AN3-5A								BOLT	30	RM	
	AN960D10								WASHER	52	RL	
	AN960D10								WASHER	54	RM	
	AN365-1032								NUT	24	RL	
	AN365-1032								NUT	19	RM	
-44	NAS146-26								BOLT	2		
	NAS143-6C								WASHER	2		
	NAS143-6								WASHER	2		
	EB-064								NUT (EN) (72962)	2		
-45	AN3-5A								BOLT (install bolthead up)	6		
	AN960D10								WASHER	6		
	AN365-1032								NUT	6		
-46	AN509-10R10								SCREW (RH only)	1	RM	
-47	AN4-6A								BOLT	2		
	AN960D428								WASHER	4		
	AN365-428								NUT	2		
-48	AN365-428								NUT	2		
	AN960D428								WASHER	4		
	AN4-11A								BOLT	2		
-49	AN4-10A								BOLT	2		
	AN960D428								WASHER	4		
	AN365-428								NUT	2		
-50	AN3-5A								BOLT	2		
	AN960D10L								WASHER	2		
	AN960D10								WASHER	2		
	AN365-1032								NUT	2		
-51	AN3-5A								BOLT	8		
	AN960D10								WASHER	16		
	AN365-1032								NUT	8		
-52	AN365-524								NUT	2		
	AN960D516								WASHER	4		
	AN5-11A								BOLT	2		
-53	AN365-524								NUT	2		
	AN960D516								WASHER	4		
	AN5-7A								BOLT	2		
-54	AN4-11A								BOLT	2		
	AN960-428								WASHER	4		
	AN365-428								NUT	2		
-55	AN3-5A								BOLT	22		
	AN960D10								WASHER	44		
	AN365-1032								NUT	22		
-56	209-31841								SHROUD, Cockpit enclosure windshield	1		
-57	181-31809-3								FITTING, Cockpit enclosure canopy truck (LH)	1		
	181-31809-4								FITTING, Cockpit enclosure canopy truck (RH)	1		

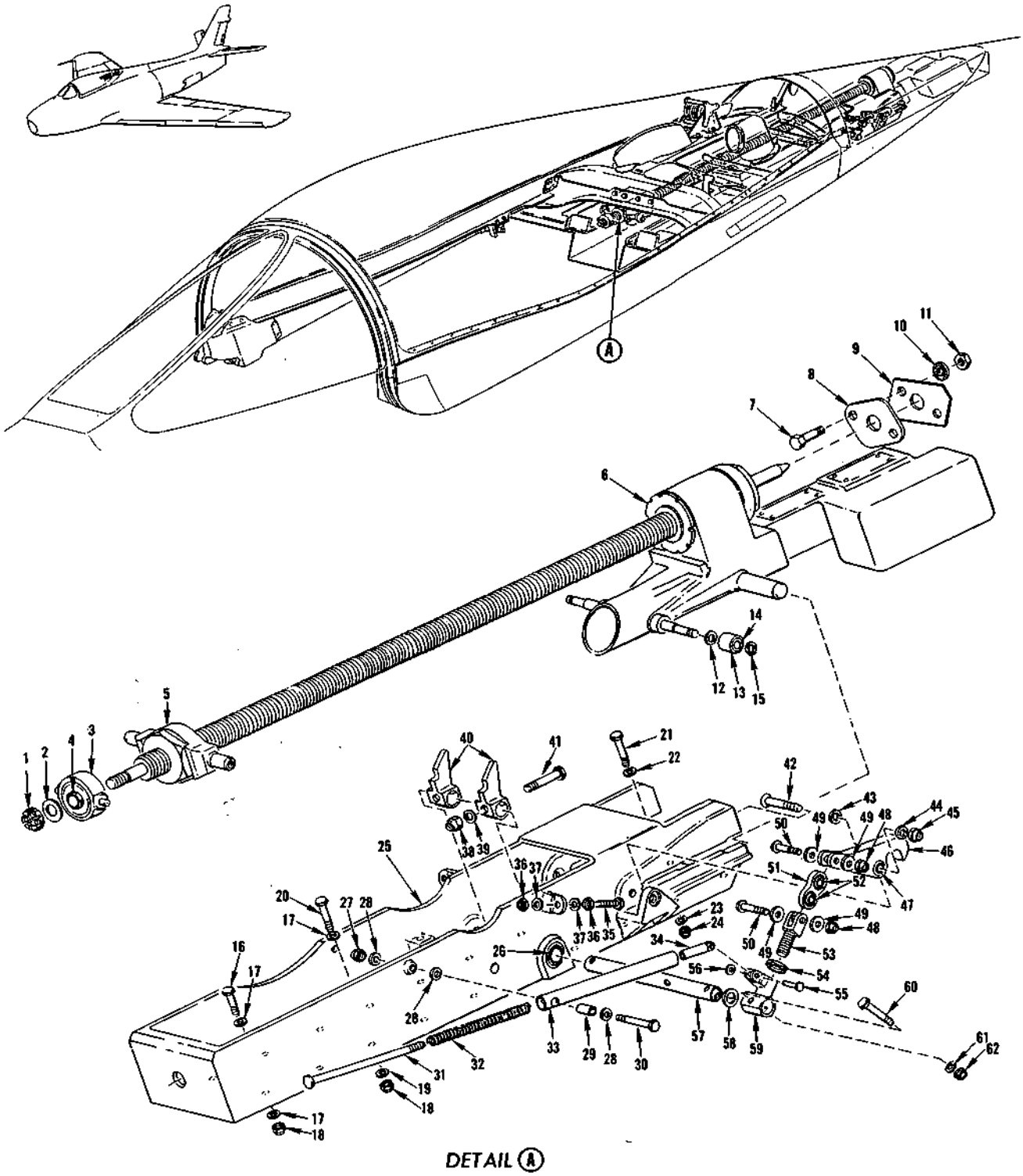

FIGURE 51 - OPERATING MECHANISM

OPERATING MECHANISM

FIGURE & INDEX NO.	PART NUMBER	1 2 3 4 5 6 7 NOMENCLATURE	UNITS PER ASSY.	USABLE ON CODE	S/C NO.
51-1	AN320-7	NUT	1		
-2	2W18-716	WASHER, Flat (NA) (89372)	1		
-3	209-31832	BEARING ASSEMBLY, Canopy actuator screw forward support	1		
-4	AN200KP8	. BEARING	1		
-5	209-31892-3	FITTING, Canopy to actuator nut attaching	1		
-6	D-1870	ACTUATOR (HOOV) (81817) (for breakdown see Technical Manual NA 03-5CHP-512) (superseded by D-1870-1 (HOOV) (81817) for future procurement)	1		
	D-1870-1	ACTUATOR (HOOV) (81817) (supersedes D-1870 (HOOV) (81817) for future procurement)	1		
-7	AN5-6	BOLT	2		
-8	209-31853-7	PLATE, Cockpit enclosure canopy fuselage station 160.812 frame assembly	1		
-9	209-31853-9	SCUFF PLATE, Cockpit enclosure canopy fuselage station 160.812 frame assembly	1		
-10	2W13-5	WASHER, Serrated (NA) (89372)	2		
-11	AN365-524	NUT	2		
-12	2W1AL30-20-40	WASHER, Plain (NA) (89372)	2		
-13	181-318139	BUSHING ASSEMBLY, Cockpit enclosure canopy lock	2		
-14	B-68	. BEARING (TOR) (60380)	1		
-15	NAS51-37	RING	2		
-16	AN3-5A	BOLT	16		
-17	2W18-10L	WASHER, Flat (NA) (89372)	34		
-18	AN365-1032	NUT	18		
-19	2W18-10	WASHER, Flat (NA) (89372)	2		
-20	AN3-7A	BOLT	2		
-21	AN4-7A	BOLT	2		
-22	2W18-416L	WASHER, Flat (NA) (89372)	2		
-23	2W18-416	WASHER, Flat (NA) (89372)	2		
-24	AN365-428	NUT	2		
	209-31822	LOCK ASSEMBLY, Cockpit enclosure canopy	1		
-25	209-31821	. FITTING ASSEMBLY, Cockpit enclosure canopy actuator lock	1		
-26	B538	. . BEARING (FAF) (21335)	2		
-27	AN365-1032	. NUT	2		
-28	2W18-10	. WASHER, Flat (NA) (89372)	6		
-29	4B21S3-021	. BUSHING, Spacer (NA) (89372)	2		
-30	AN3-14A	. BOLT	2		
	209-31865	. BUNGEE ASSEMBLY, Canopy cockpit enclosure actuating lock	2		
-31	187-52074	. . ROD, Manual emergency flight control change-over forward return bungee	1		
-32	187-52073	. . SPRING, Compression	1		
-33	187-52072-7	. . TUBE, Manual emergency flight control change-over bungee return	1		
-34	209-31866	. . EYE, Canopy cockpit enclosure actuator lock bungee	1		
-35	NAS428-3-6	. BOLT	2		
-36	AN315-3R	. NUT	4		
-37	2W18-10M	. WASHER, Flat (NA) (89372)	4		
-38	AN365-428	. NUT	2		
-39	2W18-416M	. WASHER, Flat (89372)	2		
-40	181-318109	. FITTING, Cockpit enclosure canopy release actuating	2		
-41	NAS222-20	. SCREW	2		
-42	209-31823	. SCREW, Cockpit enclosure canopy actuator lock	2		
-43	2W18-416	. WASHER, Flat (NA) (89372)	2		
-44	2W18-416M	. WASHER, Flat (NA) (89372)	2		
-45	AN364-428	. NUT	2		
-46	181-318107	. HOOK ASSEMBLY, Cockpit enclosure canopy release	2		
-47	4DR9	. . BEARING (TOR) (60380)	1		
-48	AN364-1032	. NUT	4		
-49	2W1AL13-14-16	. WASHER, Plain (NA) (89372)	8		
-50	AN23-13A	. BOLT	4		
-51	181-318106	. LINK ASSEMBLY, Cockpit enclosure canopy release	2		
-52	AN200K3L	. . BEARING	2		
-53	181-318105	. FITTING, Cockpit enclosure canopy release clevis	2		
-54	AN316-8R	. NUT	2		
-55	AN392-13	. PIN	2		
-56	2W18-4	. WASHER, Flat (NA) (89372)	2		
-57	209-31867	. TUBE, Cockpit enclosure canopy release torque	1		
-58	2W1AL41-38-16	. WASHER, Plain (NA) (89372)	2		
-59	209-31864-3	. FITTING, Cockpit enclosure canopy jettison release	2		
-60	AN4-12A	. BOLT	2		
-61	2W18-416	. WASHER, Flat (NA) (89372)	2		
-62	AN364-428	. NUT	2		

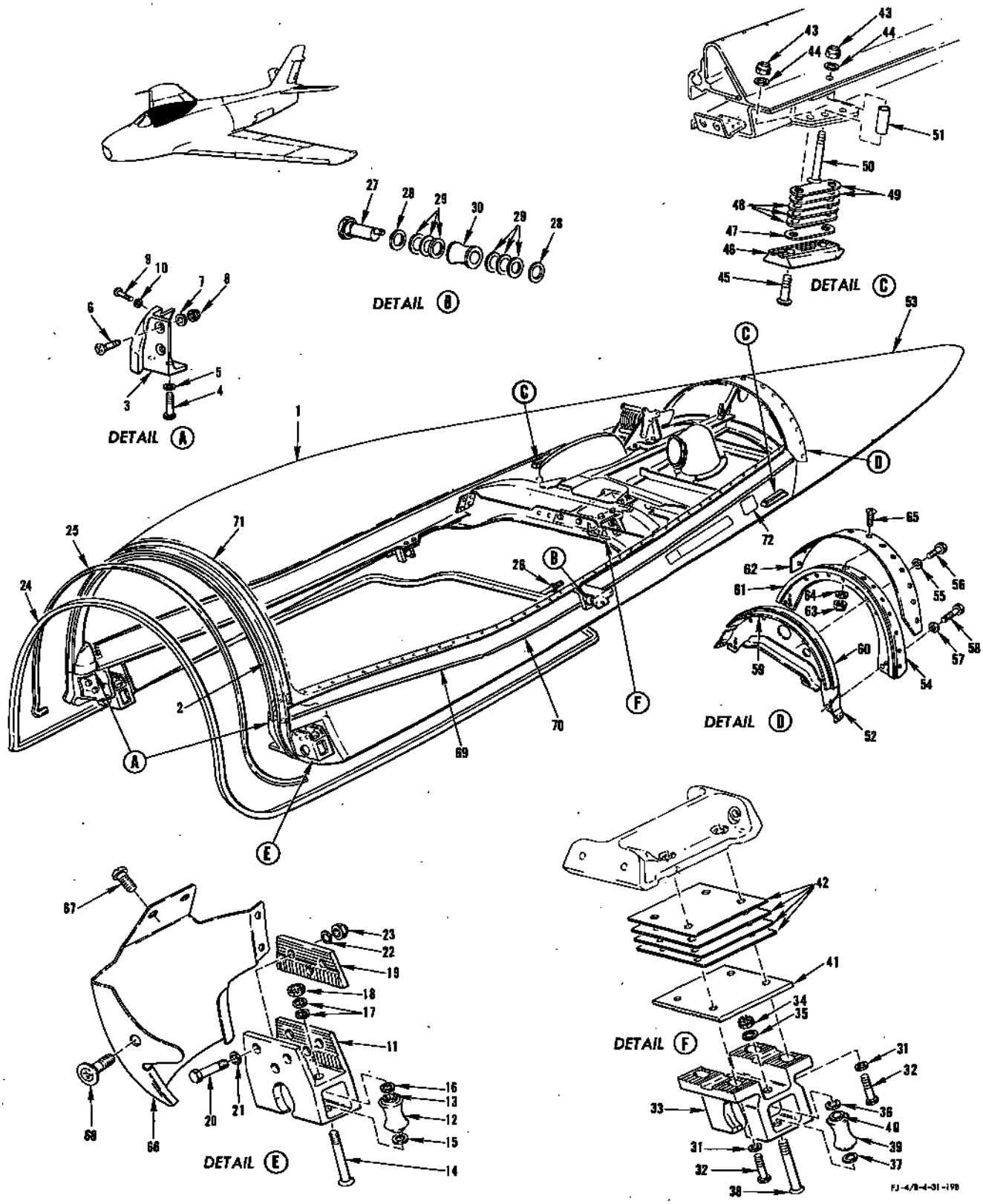

FIGURE 52 - CANOPY ASSEMBLY

CANOPY ASSEMBLY

FIGURE & INDEX NO.	PART NUMBER	1 2 3 4 5 6 7 NOMENCLATURE	UNITS PER ASSY.	USABLE ON CODE	S/C NO.
52	209-31802	CANOPY ASSEMBLY, Cockpit enclosure (see figure 54 for additional breakdown)-	1	LE	
	209-31802-301	CANOPY ASSEMBLY, Cockpit enclosure (see figure 54 for additional breakdown)-	1	KY	
-1	209-31804	. GLASS ASSEMBLY, Cockpit enclosure canopy	1		
-2	181-31805	. BOW, Cockpit canopy	1		
	ATTACHING PARTS				
	7S16CN10-16	. SCREW, 100° flush head corrosion-resistant	19		
	2W18-10M	. WASHER, Flat (NA) (89372)	19		
	AN363C1032	. NUT	19		
	---*---				
-3	209-31858-1	. FITTING, Cockpit enclosure canopy bow attaching LH	1		
	209-31858-2	. FITTING, Cockpit enclosure canopy bow attaching RH	1		
-4	AN3-6A	. BOLT	4		
-5	2W18-10	. WASHER, Flat (NA) (89372)	4		
-6	7S16CN416-12	. SCREW, 100° flush head corrosion-resistant (NA) (89372)	4		
	181-31825-1	. RETAINER ASSEMBLY, Cockpit enclosure canopy bow attaching fitting nut LH	1		
	181-31825-2	. RETAINER ASSEMBLY, Cockpit enclosure canopy bow attaching fitting nut RH	1		
-7	2W18-416M	. WASHER, Flat (NA) (89372)	4		
-8	AN363C428	. NUT	4		
-9	NAS221-10	. SCREW	2		
	3600-02	. NUT, Anchor (NUS) (80539)	2		
-10	2W18-10M	. WASHER, Flat (NA) (89372)	2		
	181-31806	. TRUCK ASSEMBLY, Cockpit enclosure canopy front	2		
-11	181-31806-3	. . SUPPORT, Cockpit enclosure canopy front truck assembly	1		
-12	181-31808	. . ROLLER ASSEMBLY, Cockpit enclosure canopy track	2		
	181-31808-3	. . . ROLLER, Cockpit enclosure canopy track roller assembly	1		
-13	4B20B5-008	. . . BUSHING, Press fit flanged (NA) (89372)	2		
-14	181-31810	. . SCREW, Cockpit enclosure canopy front truck roller	2		
-15	2W2S20-24-032	. . WASHER, Thrust (NA) (89372)	2		
-16	2W2S20-20-062	. . WASHER, Thrust (NA) (89372)	2		
-17	AN960D516L	. . WASHER	4		
-18	AN310-5	. . NUT	2		
-19	181-31807	. PLATE, Cockpit enclosure canopy front truck serrated	4		
-20	209-31824	. BOLT, Fuselage station 81.296 canopy	12		
-21	2W10-5	. WASHER, Countersunk (NA) (89372)	12		
-22	2W18-516M	. WASHER, Flat (NA) (89372)	12		
-23	AN364-524C	. NUT	12		
	209-31811	. SEAL ASSEMBLY, Cockpit enclosure canopy	1		
-24	209-31812	. . SEAL ASSEMBLY, Cockpit enclosure canopy pressure	1		
	7904B4003-2	. . . VALVE FITTING (GD) (25472)	1		
-25	181-31822	. . . SEAL, Cockpit enclosure canopy rain (superseded by 181-31822-11 - for future procurement)	1		
	181-31822-11	. . . SEAL, Cockpit enclosure canopy rain (supersedes 181-31822 for---- future procurement)	1		
-26	AN807-4D	. . . ADAPTER	1		
-27	181-31828	. PIN, Cockpit enclosure canopy hook	1		
-28	2W1AL23-24-32	. WASHER, Plain (NA) (89372)	2		
-29	2W17-716M	. WASHER, Corrosion-resistant steel (NA) (89372)	6		
-30	181-318135	. ROLLER, Cockpit enclosure rear latch	1		
-31	2W18-516	. WASHER, Flat (NA) (89372)	4		
-32	AN5-12A	. BOLT	4		
	209-31825	. TRUCK ASSEMBLY, Cockpit enclosure canopy aft	1		
-33	209-31825-3	. . SUPPORT, Cockpit enclosure canopy aft truck assembly	1		
-34	AN320-5	. . NUT	2		
-35	2W18-516M	. . WASHER, Flat (NA) (89372)	2		
-36	2W2S20-20-064	. . WASHER, Thrust (NA) (89372)	2		
-37	2W2S20-20-032	. . WASHER, Thrust (NA) (89372)	2		
-38	181-31810	. . SCREW, Cockpit enclosure front truck roller	2		
-39	181-31808	. . ROLLER ASSEMBLY, Cockpit enclosure canopy track	2		
	181-31808-3	. . . ROLLER, Cockpit enclosure canopy track roller assembly	1		
-40	4B20B5-008	. . . BUSHING, Press fit flanged (NA) (89372)	2		
-41	209-31826	. PLATE, Cockpit enclosure canopy rear truck adjacent serrated	1		
-42	209-31802-19	. SHIM, Cockpit enclosure complete canopy assembly	AR		
-43	AN365-428	. NUT	2		
-44	2W18-416M	. WASHER, Flat (NA) (89372)	2		
-45	NAS222-20	. SCREW	2		
-46	209-31838-3	. SHOE, Cockpit enclosure canopy hold-down	2		
	209-31893-3	. SHOE, Cockpit enclosure canopy hold-down	2		
-47	209-31895	. PLATE, Cockpit enclosure canopy hold-down shoe serrated adjusting	2		
-48	209-31802-21	. SHIM, Cockpit enclosure canopy assembly	3		
-49	209-31802-23	. SHIM, Cockpit enclosure canopy assembly	2		
-50	AN509-416R39	. BOLT (LH side)	1		
	AN509-416R38	. BOLT (RH side)	1		
-51	NAS43DD4-84	. SPACER	1		
	209-31803	. FRAME ASSEMBLY, Cockpit enclosure canopy (see figure 53 for additional breakdown)	1		
-52	209-31816	. . BULKHEAD ASSEMBLY, Cockpit enclosure canopy fuselage canted station 140 pressure	1		
-53	209-31850	. FRAME ASSEMBLY, Cockpit enclosure canopy complete aft	1		
-54	209-31851	. . FRAME ASSEMBLY, Cockpit enclosure canopy fuselage canted station 140 aft	1		
-55	2W18-10	. WASHER, Flat (NA) (89372)	12		
-56	AN3-4A	. BOLT	8		
-57	2W18-416	. WASHER, Flat (NA) (89372)	4		

CANOPY ASSEMBLY

FIGURE & INDEX NO.	PART NUMBER	1	2	3	4	5	6	7	NOMENCLATURE	UNITS PER ASSY.	USABLE ON CODE	S/C NO.
52-58	AN4-7A	.	BOLT							4		
-59	209-31802-9	.	SEAL, Cockpit enclosure canopy assembly							1		
-60	209-31802-7	.	SEAL, Cockpit enclosure canopy assembly							1		
-61	209-31802-5	.	SEAL, Cockpit enclosure canopy assembly							1		
-62	209-31802-3	.	RETAINER, Cockpit enclosure canopy assembly							1		
-63	AN365-1032	.	NUT							16		
-64	2W18-10	.	WASHER, Flat (NA) (89372)							16		
-65	AN507-10R7	.	SCREW							16		
-66	209-31834-1	.	FAIRING ASSEMBLY, Cockpit enclosure canopy front truck LH							1		
	209-31834-2	.	FAIRING ASSEMBLY, Cockpit enclosure canopy front truck RH							1	LE	
	209-31834-15	.	FAIRING ASSEMBLY, Cockpit enclosure canopy front truck RH							1	KY	
	AN5800-1	.	.	HOLDER ASSEMBLY, Correction card (used on RH assembly only)						1		
	R88H500	.	.	HOLDER, Card (GFP) (used on 209-31834-2 only)						1	LE	
	FNA-324	.	.	HOLDER, Card (FEL) (22040) (used on 209-31834-15 only)						1	KY	
-67	7S14CN1032-10A	.	SCREW, Round head corrosion-resistant (NA) (89372)							4		
-68	SP1581-832-12	.	SCREW (SH) (78189)							1		
-69	209-31802-11	.	TUBE, Cockpit enclosure forward canopy assembly							2		
-70	209-31802-13	.	TUBE, Cockpit enclosure forward canopy assembly							2		
-71	209-31802-15	.	SEAL, Cockpit enclosure forward canopy assembly							1		
-72	5P48	PLATE, Navy identification and modification (NA) (89372)								1		

FRAME ASSEMBLY

FIGURE & INDEX NO.	PART NUMBER	1	2	3	4	5	6	7	NOMENCLATURE	UNITS PER ASSY.	USABLE ON CODE	S/C NO.
53-65	209-31803-27	.							WASHER, Cockpit enclosure canopy complete forward frame assembly (make from 2W1AL22-28-32 (NA) (89372))	3		
-66	NAS43DD3-64	.							SPACER	1		
-67	209-31883	.							LATCH ASSEMBLY, Canopy manual release external handle	1		

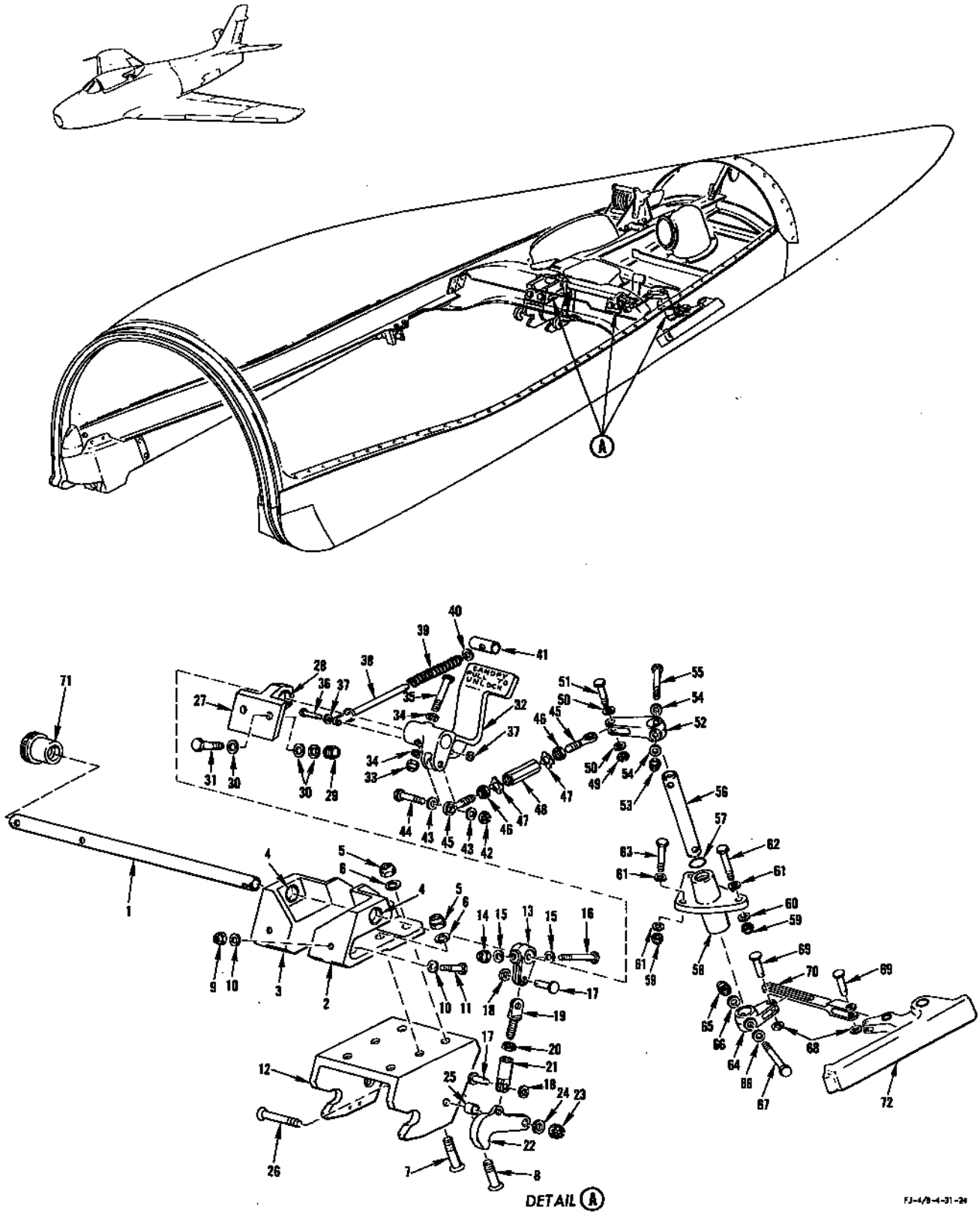

FIGURE 54 - CANOPY RELEASE MECHANISM, INTERNAL AND EMERGENCY

PILOTS FURNISHINGS - APPLICABLE TO AIRCRAFT CODED (ET)

FIGURE & INDEX NO.	PART NUMBER	1 2 3 4 5 6 7 NOMENCLATURE	UNITS PER ASSY.	USABLE ON CODE	S/C NO.
55-1	181-53009	SEAT ASSEMBLY, Pilots complete (see figure 56 for breakdown)	1	ET	275, 450
-2	181-53126	BOOT ASSEMBLY, Control stick	1	ET	
-3	181-53178-201	FLOOR ASSEMBLY, Fuselage station 78 to station 92.95 pilots	1	DN	
	181-53178-301	FLOOR ASSEMBLY, Fuselage station 78 to station 92.95 pilots	1	GY	
	ATTACHING PARTS				
	AN507-1032R8	SCREW	5	ET	
	SP1561-1032-10	SCREW ASSEMBLY (SH) (78189)	8	ET	
	---*---				
-4	181-53176-7	FLOOR, Fuselage station 61.906 to station 78 pilots forward LH	1	ET	
-5	181-53176-8	FLOOR, Fuselage station 61.906 to station 78 pilots forward RH	1	ET	
	ATTACHING PARTS				
	AN507-1032R10	SCREW	20	ET	
	SP1561-1032-10	SCREW ASSEMBLY (SH) (78189)	16	ET	
	---*---				
-6	181-53183-101	FAIRING ASSEMBLY, Console close-out fuselage station 71.75 to station 81.296 LH	1	ET	
	ATTACHING PARTS				
	SP1561-1032-10	SCREW ASSEMBLY (SH) (78189)	7	ET	
	---*---				
-7	181-53184-13	FAIRING ASSEMBLY, Console close-out fuselage station 81.296 RH	1	ET	
	ATTACHING PARTS				
	SP1561-1032-10	SCREW ASSEMBLY (SH) (78189)	6	ET	
	---*---				
-8	181-53247-101	FAIRING, Console fuselage station 75 canopy and landing gear emergency handle support bracket LH	1	BR	
	209-73363	FAIRING, Console fuselage station 75 canopy and landing gear emergency handle (superseded by 209-73363-31 for future procurement)	1	FX	
	209-73363-31	FAIRING, Console fuselage station 75 canopy and landing gear emergency handle (supersedes 209-73363 for future procurement)	1	FX	
	ATTACHING PARTS				
	AN520-10R10	SCREW	7	ET	
	---*---				
-9	209-53209-5	FAIRING, Console fuselage station 75 emergency landing gear support bracket (superseded by 209-53209-11 for future procurement)	1	ET	
	209-53209-11	FAIRING, Console fuselage station 75 emergency landing gear support bracket (supersedes 209-53209-5 for future procurement)	1	ET	
	ATTACHING PARTS				
	AN520-10R10	SCREW	7	ET	
	---*---				
-10	181-53180	CHANNEL ASSEMBLY, Console close-out fuselage station 81.296 RH (superseded by 181-53180-11 for future procurement)	1	ET	
	181-53180-11	CHANNEL ASSEMBLY, Console close-out fuselage station 81.296 RH (supersedes 181-53180 for future procurement)	1	ET	
	ATTACHING PARTS				
	AN520-10R10	SCREW	2	ET	
	---*---				
-11	181-53182	COVER, Pilots console quadrant handhold	1	ET	
	ATTACHING PARTS				
	AN520-10R8	SCREW	2	ET	
	---*---				
-12	181-53153-101	PANEL ASSEMBLY, Pilots console LH side	1	BR	475
	181-53153-201	PANEL ASSEMBLY, Pilots console LH side	1	FX	475
	99836	. PIN (UC) (61864)	4	BR	
	99836	. PIN (UC) (61864)	2	FX	
	98265-1-.150	. STUD (UC) (61864) (forward)	1	ET	
	98265-1-.130	. STUD (UC) (61864) (forward intermediate)	1	BR	
	98265-1-.120	. STUD (UC) (61864) (aft intermediate and aft)	2	BR	
	98265-1-.120	. STUD (UC) (61864) (aft)	1	FX	475
-13	181-53152-101	PANEL ASSEMBLY, Pilots console RH side	1	BR	475
	181-53152-201	PANEL ASSEMBLY, Pilots console RH side	1	FX	
	99836	. PIN (UC) (61864)	4	BR	
	99836	. PIN (UC) (61864)	1	FX	
	98265-1-.150	. STUD (UC) (61864) (forward)	1	BR	
	98265-1-.130	. STUD (UC) (61864) (forward intermediate)	1	BR	
	98265-1-.120	. STUD (UC) (61864) (aft intermediate and aft)	2	BR	
	98265-1-.120	. STUD (UC) (61864) (aft)	1	FX	
-14	181-53287	PANEL, LH rear console close-out fuselage station 113.5	1	ET	
	ATTACHING PARTS				
	AN520-10R8	SCREW	1	ET	
	---*---				
-15	181-53189	COVER ASSEMBLY, Pilots console fuselage station 113.5 LH	1	ET	
	ATTACHING PARTS				
	AN520-10R10	SCREW	4	ET	
	---*---				
-16	181-53175-31	PLATE ASSEMBLY, Pilots console RH rear	1	ET	
	98265-2-.190	. STUD (UC) (61864)	2	ET	
	99836	. PIN (UC) (61864) (one used with each stud)	2	ET	
	PC3-1/2	. CUP (DZ) (72794)	2	ET	
	PS3-1/2	. SPRING (DZ) (72794)	2	ET	
	PF3-1/2-38	. FASTENER (DZ) (72794)	2	ET	
	PRB3-1/2	. RECEPTACLE (DZ) (72794)	2	ET	
-17	181-532108-101	COVER ASSEMBLY, Pilots floor station 92.95 to station 107.38	1	ET	

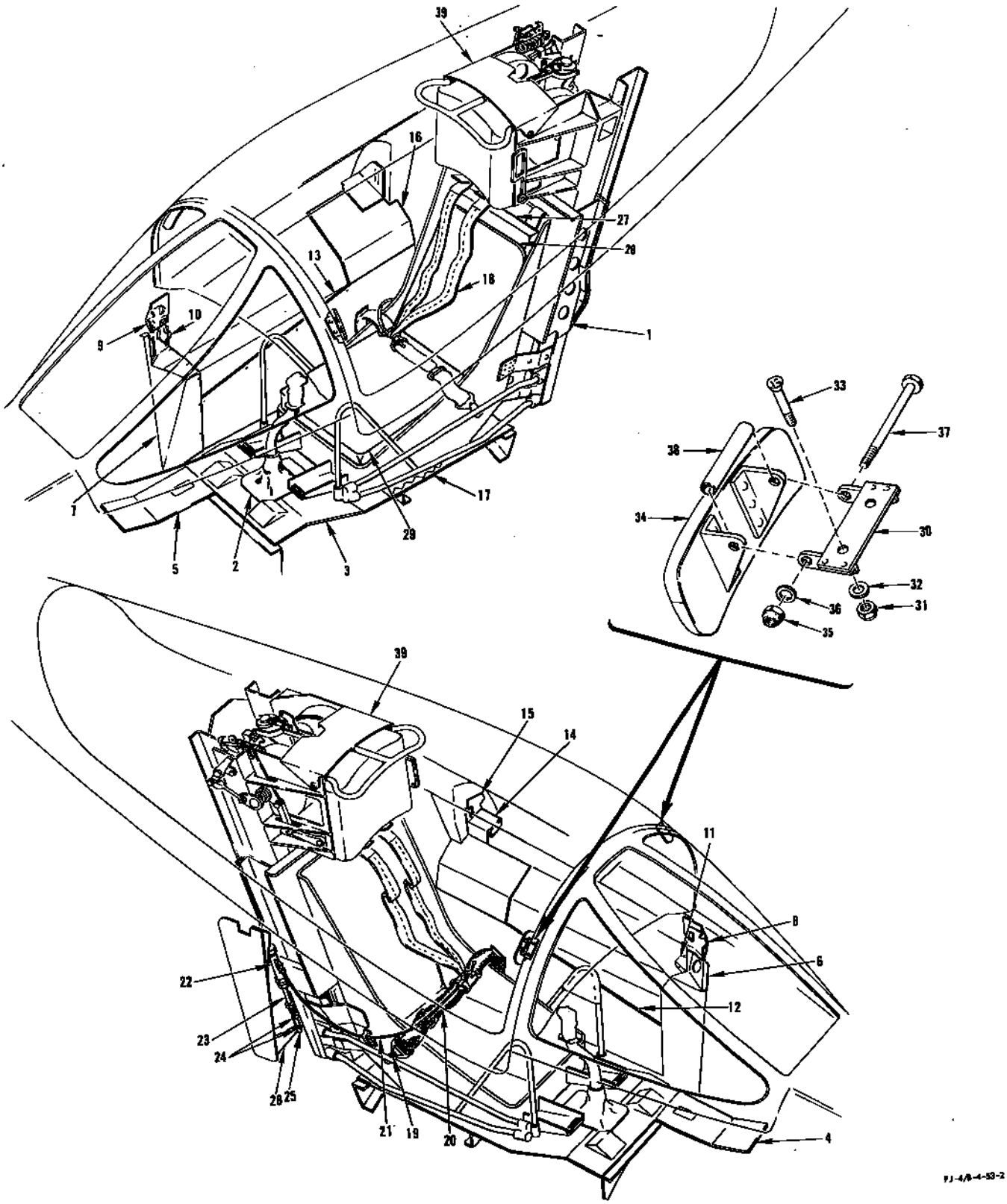

FIGURE 55 - PILOTS FURNISHINGS - APPLICABLE TO AIRCRAFT CODED (ET)

PILOTS FURNISHINGS - APPLICABLE TO AIRCRAFT CODED (ET)

FIGURE & INDEX NO.	PART NUMBER	1 2 3 4 5 6 7 NOMENCLATURE	UNITS PER ASSY.	USABLE ON CODE	S/C NO.
55		ATTACHING PARTS			
	AN515-8R8	SCREW	12	ET	
		---*---			
	AN230B20	. GROMMET	9	ET	
	AN230W820	. WASHER	9	ET	
-18	NAF1201-9	SHOULDER HARNESS (GFP)	1	ET	
		ATTACHING PARTS			
	AN320-4	NUT	2	ET	
	2W18-416L	WASHER, Flat (NA) (89372)	4	ET	
	AN24-10	BOLT (install with bolthead up)	2	ET	
		---*---			
	MS16036-2	BELT (GFP) (use with MK-1 MOD-0 cartridge only)	1	ET	275
	MS16036-2A	BELT (GFP) (use with either MK-1 MOD-0 or MK-3 MOD-0 cartridge)	1	ET	
		ATTACHING PARTS			
-19	AN25-15	BOLT (install with head inside bucket)	2	ET	
	2W18-516	WASHER, Flat (NA) (89372)	2	ET	
	AN320-5	NUT	2	ET	
		---*---			
-20	MS16036-5	. BELT ASSEMBLY (Mfg Dwg No. NAF606148-1) (GFP)	1	ET	
-21	MS16036-8	. CABLE ASSEMBLY (Mfg Dwg No. NAF502537-2) (GFP)	1	ET	
-22	MS16036-9	. ACTUATOR (Mfg Dwg No. NAF502535-1) (GFP)	1	ET	
		ATTACHING PARTS			
	AN3-6A	. BOLT (upper)	1	ET	
	AN3H6A	. BOLT (lower)	1	ET	
	2W18-10	. WASHER, Flat (NA) (89372)	2	ET	
		---*---			
-23	MS16036-10	. ACTUATING UNIT (Mfg Dwg No. NAF502536-1) (GFP)	1	ET	
	MS16036-10A	. ACTUATING UNIT (Mfg Dwg No. NAF502536-1) (GFP)	1	ET	
	No Number	CARTRIDGE (MK-1 MOD-0 3/4 second delay) (GFP) (for use with either MS16036-2 or MS16036-2A belt)	1	ET	
	No Number	CARTRIDGE (MK-3 MOD-0) (GFP) (for use with MS16036-2A belt only)	1	ET	
-24	AN23-12	BOLT	2	ET	
	2W18-10	WASHER, Flat (NA) (89372)	4	ET	
	AN310-3	NUT	2	ET	
-25	209-53175-3	LINK, Lap belt actuating	1	ET	275, 450
-26	209-53028-3	ANGLE, Navy automatic lap belt	1	ET	275, 450
		ATTACHING PARTS			
	AN4-6A	BOLT	2	ET	
	2W18-416M	WASHER, Flat (NA) (89372)	2	ET	
		---*---			
-27	209-53026	BLOCK ASSEMBLY, Pilots seat pack	1	ET	
-28	No Number	PILOT BACK PAN, Model BP-1 (GFP)	1	ET	
-29	No Number	PILOT SEAT PAN, Model SP-1 (GFP)	1	ET	
	No Number	PARA-RAFT KIT, Model PK-2 (GFP)	1	ET	
-30	194-53153	BRACKET ASSEMBLY, Pilots rear vision mirror attaching	2	ET	
-31	AN363C1032	NUT	4	ET	
-32	2W18-10M	WASHER, Flat (NA) (89372)	4	ET	
-33	7S16CN10-16	SCREW, 100° flush head corrosion-resistant steel (NA) (89372)	4	ET	
-34	181-53177-11	MIRROR, Pilots rear view assembly of (supersedes 181-53177 for future procurement)	2	ET	
-35	AN365-1032	NUT	2	ET	
-36	2W18-10M	WASHER, Flat (NA) (89372)	2	ET	
-37	AN3-33A	BOLT	2	ET	
-38	NAS43DD3-184	SPACER	2	ET	
-39		PILOTS SEAT EJECTION CONTROL MECHANISM (see figure 58)			

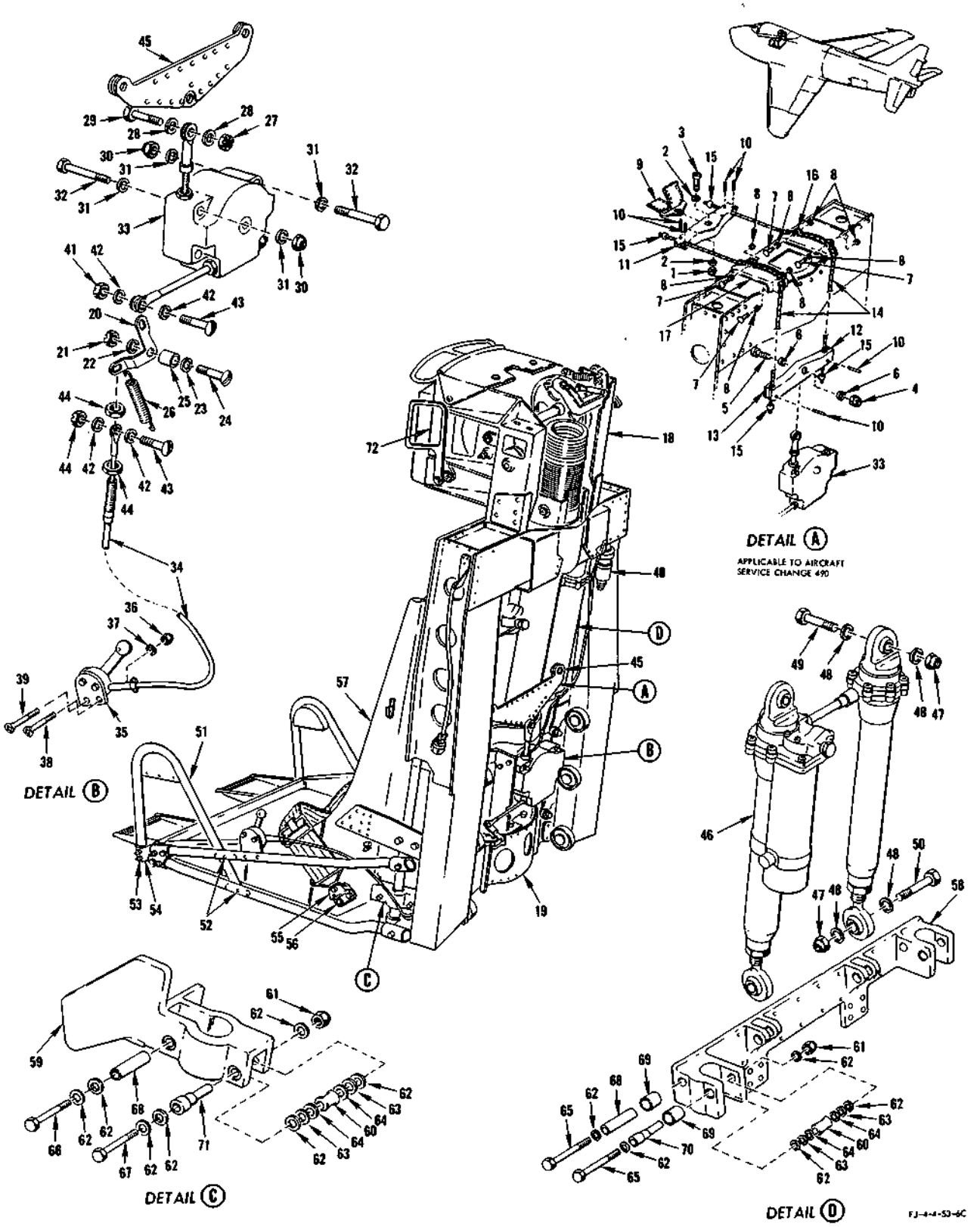

FIGURE 56 - PILOTS SEAT ASSEMBLY - APPLICABLE TO AIRCRAFT CODED (ET)

PILOTS SEAT ASSEMBLY - APPLICABLE TO AIRCRAFT CODED (ET)

FIGURE & INDEX NO.	PART NUMBER	1 2 3 4 5 6 7 NOMENCLATURE	UNITS PER ASSY.	USABLE ON CODE	S/C NO.
56-1	AN320-4	NUT	1	ET	490
-2	2W18-416	WASHER, Flat (NA) (89372)	2	ET	490
-3	AN24-24	BOLT	1	ET	490
-4	AN320-5	NUT	1	ET	490
-5	AN25-22	BOLT	1	ET	490
-6	2W18-516M	WASHER, Flat (NA) (89372)	2	ET	490
-7	AN392-19	PIN	4	ET	490
-8	AN2W18-6	WASHER, Flat (NA) (89372)	8	ET	490
-9		SHOULDER HARNESS (see pilots furnishings) (GFP)	1	ET	490
-10	NAS561C2-11	ROLLPIN	6	ET	490
-11	209-53011	BAR, Pilots ejection seat upper spreader (upper)	1	ET	490
-12	209-53013	BAR, Pilots ejection seat spreader assembly of (lower)	1	ET	490
-13	209-53012	. BAR, Pilots ejection seat lower spreader	1	ET	490
-14	209-53013-3	. CABLE, Stainless steel cable	2	ET	490
-15	AN664C5	. . BALL	4	ET	490
-16	209-53010-2	GUIDE, Pilots ejection seat cable RH	1	ET	490
-17	209-53010-1	GUIDE, Pilots ejection seat cable LH	1	ET	490
	181-53009-201	SEAT ASSEMBLY, Pilots complete	1	ET	
-18	209-53126	. HEADREST ASSEMBLY, Pilots ejection seat (see figure 58 for breakdown)	1	ET	
-19	181-53005-201	. CARRIAGE ASSEMBLY, Pilots ejection seat (see figure 61 for breakdown)	1	ET	
-20	181-53077	. BELLCRANK, Pilots ejection seat inertia reel	1	ET	
-21	AN310-3	. NUT	1	ET	
-22	2W17-10	. WASHER, Corrosion-resistant steel (NA) (89372)	1	ET	
-23	2W18-10L	. WASHER, Flat (NA) (89372)	1	ET	
-24	AN23-9	. BOLT	1	ET	
-25	4B19S3-005	. BUSHING, Press fit plain (NA) (89372)	1	ET	
-26	169-31154	. SPRING, Tension (superseded by 209-53031 for future procurement)	1	ET	
	209-53031	. SPRING, Tension (supersedes 169-31154 for future procurement)	1	ET	
-27	AN320-5	. NUT	1	ET	
-28	2W18-516M	. WASHER, Flat (NA) (89372)	2	ET	
-29	AN25-13	. BOLT	1	ET	
	10-1303-23S130	. REEL ASSEMBLY, Multidirectional shoulder harness take-up (ASE) (02860) - (for breakdown see Technical Manual AN 03-1-594)	1	ET	
	ATTACHING PARTS				
-30	AN365-428	. NUT	4	ET	
-31	2W17-416L	. WASHER, Corrosion-resistant steel (NA) (89372)	8	ET	
-32	AN4-16A	. BOLT	4	ET	
	---*---				
-33	18050-1303-23	. . REEL, Electromagnetic left-hand (ASE) (02860)	1	ET	
-34	18140-13-130	. . CABLE ASSEMBLY, Manual control (ASE) (02860)	1	ET	
-35	18120-1	. . CONTROL, Manual (ASE) (02860)	1	ET	
	ATTACHING PARTS				
-36	AN364-1032	. . NUT	2	ET	
-37	2W18-10L	. . WASHER, Flat (NA) (89372)	2	ET	
-38	AN507-1032R32	. . SCREW	1	ET	
-39	AN507-1032R30	. . SCREW	1	ET	
	---*---				
-40	18090-S	. . SWITCH, Multidirectional inertia (ASE) (02860)	1	ET	
-41	AN310-3	. NUT	2	ET	
-42	2W17-10L	. WASHER, Corrosion-resistant steel (NA) (89372)	4	ET	
-43	AN23-9	. BOLT	2	ET	
-44	AN316-7R	. NUT	2	ET	
-45	181-53038	. YOKE ASSEMBLY, Pilots ejection seat shoulder harness spacer	1	ET	490
-46	EM1400-1	. ACTUATOR, Pilots seat (EMEG) (96212) (supersedes EM1400 (EMEG) (96212) for future procurement) (for breakdown see Technical Manual NA 03-5CH-527)	1	ET	
-47	AN365-524	. NUT	4	ET	
-48	2W18-516M	. WASHER, Flat (NA) (89372)	8	ET	
-49	AN5-11A	. BOLT (upper)	2	ET	
-50	AN5-13A	. BOLT (lower)	2	ET	
-51	181-53289-101	. TUBE ASSEMBLY, Pilots ejection seat leg rest LH	1	ET	
	181-53289-102	. TUBE ASSEMBLY, Pilots ejection seat leg rest RH	1	ET	
	ATTACHING PARTS				
-52	AN23-27A	. BOLT	4	ET	
	2W18-10M	. WASHER, Flat (NA) (89372)	8	ET	
	4B21B3-113	. BUSHING, Spacer (NA) (89372)	4	ET	
	AN364-1032	. NUT	4	ET	
-53	AN509-10R25	. SCREW (cut to obtain a maximum of 2 threads extension beyond nut)	2	ET	
	AN509-10R26	. SCREW (cut to obtain a maximum of 2 threads extension beyond nut)	2	ET	
	2W18-10	. WASHER, Flat (NA) (89372)	4	ET	
	AN364-1032	. NUT	4	ET	
	---*---				
-54	181-53288	. FITTING, Pilots ejection seat leg rest support	2	ET	
	181-53006	. BUCKET ASSEMBLY, Pilots ejection seat (complete)	1	ET	
-55	181-53216	. . SUPPORT, Pilots ejection seat lap belt attaching	2	ET	
-56	AN24-17	. . BOLT	4	ET	
	2W18-416M	. . WASHER, Flat (NA) (89372)	4	ET	
	AN310-4	. . NUT	4	ET	
-57	181-53039	. . BUCKET ASSEMBLY, Pilots ejection seat	1	ET	
-58	181-53040-3	. . SUPPORT, Pilots ejection seat bucket upper	1	ET	
-59	181-53104-3	. . SUPPORT, Pilots ejection seat bucket lower LH	1	ET	
	181-53104-4	. . SUPPORT, Pilots ejection seat bucket lower RH	1	ET	
-60	181-53043	. ROLLER, Pilots ejection seat carriage guide	8	ET	

PILOTS SEAT ASSEMBLY - APPLICABLE TO AIRCRAFT CODED (ET)

FIGURE & INDEX NO.	PART NUMBER	1	2	3	4	5	6	7	NOMENCLATURE	UNITS PER ASSY.	USABLE ON CODE	S/C NO.
56-61	AN364-524	.	NUT							8	ET	
-62	2W17-516L	.	WASHER, Corrosion-resistant steel (NA) (89372)							32	ET	
-63	2W1ALP28-21-16	.	WASHER, Plain (NA) (89372)							16	ET	
-64	2W1ALP28-21-32	.	WASHER, Plain (NA) (89372)							16	ET	
-65	AN5-24A	.	BOLT							4	ET	
-66	AN5-17A	.	BOLT							2	ET	
-67	AN5-22A	.	BOLT							2	ET	
-68	4B21S5-102	.	BUSHING, Spacer (NA) (89372)							4	ET	
-69	4B19S5-002	.	BUSHING, Press-fit plain (NA) (89372) (may be cut to fit)							AR	ET	
-70	181-53044-5	.	BUSHING, Pilots ejection seat carriage guide							2	ET	
-71	181-53044-3	.	BUSHING, Pilots ejection seat carriage guide							2	ET	
-72	209-53200-3		PLATE, Pilots ejection seat removal warning							1	ET	490

ALL DATA DELETED FROM PAGE 205

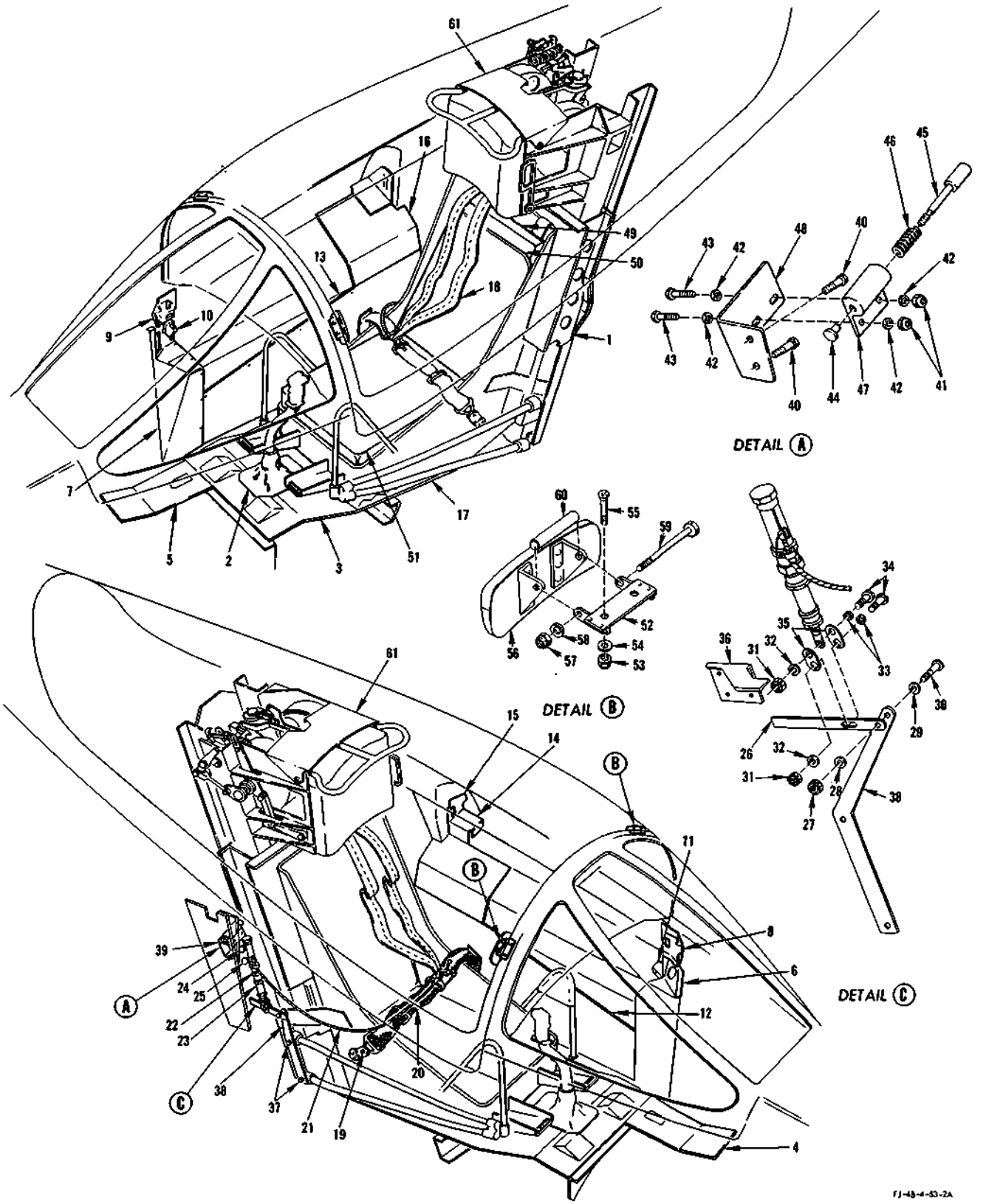

FIGURE 57 - PILOTS FURNISHINGS - APPLICABLE TO AIRCRAFT CODED (FR)

PILOTS FURNISHINGS - APPLICABLE TO AIRCRAFT CODED (FR)

FIGURE & INDEX NO.	PART NUMBER	1 2 3 4 5 6 7 NOMENCLATURE	UNITS PER ASSY.	USABLE ON CODE	S/C NO.
57-1	181-53009-701	SEAT ASSEMBLY, Pilots complete (see figure 56 for breakdown)	1	FR	
-2	181-53126	BOOT ASSEMBLY, Control stick	1	FR	
-3	181-53178-301	FLOOR ASSEMBLY, Fuselage station 78 to station 92.95 pilots	1	FR	
	ATTACHING PARTS				
	AN507-1032R8	SCREW	5	FR	
	SP1561-1032-10	SCREW ASSEMBLY (SH) (78189)	8	FR	
	---*---				
-4	181-53176-7	FLOOR, Fuselage station 61.906 to station 78 pilots forward LH	1	FR	
-5	181-53176-8	FLOOR, Fuselage station 61.906 to station 78 pilots forward RH	1	FR	
	ATTACHING PARTS				
	AN507-1032R10	SCREW	20	FR	
	SP1561-1032-10	SCREW ASSEMBLY (SH) (78189)	16	FR	
	---*---				
-6	181-53183-301	FAIRING ASSEMBLY, Console closeout fuselage station 71.75 to station 81.296 LH	1	FR	
	ATTACHING PARTS				
	SP1561-1032-10	SCREW ASSEMBLY (SH) (78189)	7	FR	
	---*---				
-7	181-53184-21	FAIRING ASSEMBLY, Console closeout fuselage station 81.296 RH	1	FR	
	ATTACHING PARTS				
	SP1561-1032-10	SCREW ASSEMBLY (SH) (78189)	6	FR	
	---*---				
-8	209-73363-3	FAIRING, Console fuselage station 75 canopy and landing gear emergency handles support bracket (superseded by 209-73363-21 for future procurement)	1	FR	
	209-73363-21	FAIRING, Console fuselage station 75 canopy and landing gear emergency handles support bracket (supersedes 209-73363-3 for future procurement)	1	FR	
	ATTACHING PARTS				
	AN520-10R10	SCREW	7	FR	
	---*---				
-9	209-53209-5	FAIRING, Console fuselage station 75 emergency landing gear support bracket (superseded by 209-53209-11 for future procurement)	1	FR	
	209-53209-11	FAIRING, Console fuselage station 75 emergency landing gear support bracket (supersedes 209-53209-5 for future procurement)	1	FR	
	ATTACHING PARTS				
	AN520-10R10	SCREW	7	FR	
	---*---				
-10	181-53180	CHANNEL ASSEMBLY, Console closeout fuselage station 81.296 RH (superseded by 181-53180-11 for future procurement)	1	FR	
	181-53180-11	CHANNEL ASSEMBLY, Console closeout fuselage station 81.296 RH (supersedes 181-53180 for future procurement)	1	FR	
	ATTACHING PARTS				
	AN520-10R10	SCREW	2	FR	
	---*---				
-11	181-53182-11	COVER, Pilots console quadrant handhold	1	FR	
	ATTACHING PARTS				
	AN520-10R8	SCREW	2	FR	
	---*---				
-12	181-53153-201	PANEL ASSEMBLY, Pilots console LH side	1	FR	475
	99836	. PIN (UC) (61864)	2	FR	
	98265-1-.150	. STUD (UC) (61864) (forward)	1	FR	
	98265-1-.120	. STUD (UC) (61864) (aft)	1	FR	
-13	181-53152-201	PANEL ASSEMBLY, Pilots console RH side	1	FR	475
	99836	. PIN (UC) (61864)	1	FR	
	98265-1-.120	. STUD (UC) (61864) (aft)	1	FR	
-14	181-53267	PANEL, LH rear console closeout station 113.5	1	FR	
	ATTACHING PARTS				
	AN520-10R8	SCREW	1	FR	
	---*---				
-15	181-53189	COVER ASSEMBLY, Pilots console fuselage station 113.5 LH	1	FR	
	ATTACHING PARTS				
	AN520-10R10	SCREW	4	FR	
	---*---				
-16	181-53175-41	PLATE ASSEMBLY, Pilots console RH rear	1	FR	
	98265-2-.190	. STUD (UC) (61864)	2	FR	
	99836	. PIN (UC) (61864) (one used with each stud)	2	FR	
	PC3-1/2	. CUP (DZ) (72794)	2	FR	
	PS3-1/2	. SPRING (DZ) (72794)	2	FR	
	PF3-1/2-38	. FASTENER (DZ) (72794)	2	FR	
	PRB3-1/2	. RECEPTACLE (DZ) (72794)	2	FR	
-17	181-532108-101	COVER ASSEMBLY, Pilots floor station 92.95 to station 107.38	1	FR	
	ATTACHING PARTS				
	AN515-8R8	SCREW	10	FR	
	---*---				
	AN230B20	. GROMMET	9	FR	
	AN230W820	. WASHER	9	FR	
-18	MS16068-1	SHOULDER HARNESS (GFP)	1	FR	
	ATTACHING PARTS				
	AN24-14A	BOLT (install with bolt head up)	1	FR	
	2W18-416M	WASHER, Flat (NA) (89372)	2	FR	
	AN363-428	NUT	1	FR	
	---*---				

PILOTS FURNISHINGS - APPLICABLE TO AIRCRAFT CODED (FR)

FIGURE & INDEX NO.	PART NUMBER	1 2 3 4 5 6 7 NOMENCLATURE	UNITS PER ASSY.	USABLE ON CODE	S/C NO.
57	MS16036-2	BELT (GFP) (use with MK-1 MOD-0 cartridge only)	1	FR	
	MS16036-2A	BELT (GFP) (use with either MK-1 MOD-0 or MK-3 MOD-0 cartridge)	1	FR	
	ATTACHING PARTS				
-19	AN25-15	BOLT (install with head inside bucket)	2	FR	
	2W18-516	WASHER, Flat (NA) (89372)	2	FR	
	AN320-5	NUT	2	FR	
	---*---				
-20	MS16036-5	. BELT ASSEMBLY (Mfg Dwg No. NAF606148-1) (GFP)	1	FR	
-21	MS16036-8	. CABLE ASSEMBLY (Mfg Dwg No. NAF502537-2) (GFP)	1	FR	
-22	MS16036-9	. ACTUATOR (Mfg Dwg No. NAF502535-1) (GFP)	1	FR	
-23	MS16036-10	. ACTUATING UNIT (Mfg Dwg No. NAF502536-1) (GFP)	1	FR	
	MS16036-10A	. ACTUATING UNIT (Mfg Dwg No. NAF502536-1A) (GFP)	1	FR	
	No Number	CARTRIDGE (MK-1 MOD-0 3/4 second delay) (GFP) (for use with either MS16036-2 or MS16036-2A belt)	1	FR	
	No Number	CARTRIDGE (MK-3 MOD-0) (GFP) (for use with MS16036-2A belt only)	1	FR	
-24	AN3-6A	BOLT	1	FR	
	2W18-10	WASHER, Flat (NA) (89372)	1	FR	
-25	AN3H6A	BOLT	1	FR	
	2W18-10	WASHER, Flat (NA) (89372)	1	FR	
-26	209-53216	BAR, Lap belt gun striker	1	FR	
-27	AN310-3	NUT	1	FR	
-28	2W18-10	WASHER, Flat (NA) (89372)	1	FR	
-29	2W18-10M	WASHER, Flat (NA) (89372)	1	FR	
-30	AN23-11	BOLT	1	FR	
-31	AN310-3	NUT	2	FR	
-32	2W18-10	WASHER, Flat (NA) (89372)	2	FR	
-33	2W18-10M	WASHER, Flat (NA) (89372)	2	FR	
-34	AN23-11	BOLT	2	FR	
-35	209-53218	LINK, Lap belt gun striker	2	FR	
-36	209-53215	SHIELD, Lap belt gun striker	1	FR	
-37	AN5-34A	BOLT	2	FR	
	2W18-516L	WASHER, Flat (NA) (89372)	4	FR	
	AN365-524	NUT	2	FR	
-38	209-53214	PLATE, Lap belt gun striker mounting	1	FR	
-39	209-53213	STOP, Lap belt gun striker assembly of	1	FR	
	ATTACHING PARTS				
-40	AN4-7A	BOLT	2	FR	
	---*---				
-41	AN364-428	. NUT	2	FR	
-42	2W18-416	. WASHER, Flat (NA) (89372)	4	FR	
-43	AN4-7A	. BOLT	2	FR	
-44	209-53212	. CAP, Lap belt gun striker stop plunger	1	FR	
-45	209-53211	. PLUNGER, Lap belt gun striker stop	1	FR	
-46	209-53217	. SPRING, Compression	1	FR	
-47	209-53210	. HOUSING, Lap belt gun striker stop	1	FR	
-48	209-53213-3	. ANGLE, Lap belt gun striker stop assembly	1	FR	
-49	209-53026	BLOCK ASSEMBLY, Pilots seat pack	1	FR	
-50	No Number	PILOT BACK PAN, Model BP-1 (GFP)	1	FR	
-51	No Number	PILOT SEAT PAN, Model SP-1 (GFP)	1	FR	
	No Number	PARA-RAFT KIT, Model PK-2 (GFP)	1	FR	
-52	194-53153	BRACKET ASSEMBLY, Pilots rear vision mirror attaching	2	FR	
-53	AN363C1032	NUT	4	FR	
-54	2W18-10M	WASHER, Flat (NA) (89372)	4	FR	
-55	7S16CN10-16	SCREW, 100° flush head corrosion-resistant steel (NA) (89372)	4	FR	
-56	181-53177	MIRROR, Pilots rear view assembly of (superseded by 181-53177-11 for future procurement)	2	FR	
	181-53177-11	MIRROR, Pilots rear view assembly of (supersedes 181-53177 for future procurement)	2	FR	
-57	AN365-1032	NUT	2	FR	
-58	2W18-10M	WASHER, Flat (NA) (89372)	2	FR	
-59	AN3-33A	BOLT	2	FR	
-60	NAS43DD3-184	SPACER	2	FR	
-61		PILOTS EJECTION SEAT HEADREST ASSEMBLY	1		

PILOTS FURNISHINGS - APPLICABLE TO MARTIN-BAKER EQUIPPED AIRCRAFT

FIGURE & INDEX NO.	PART NUMBER	1 2 3 4 5 6 7 NOMENCLATURE	UNITS PER ASSY.	USABLE ON CODE	S/C NO.
57A-1	B/MBEU/10300	SEAT ASSEMBLY, Martin-Baker MK-N5, pilots (04253)	1		
-2	181-53126	BOOT ASSEMBLY, Control stick	1		
-3	181-53178-201	FLOOR ASSEMBLY, Fuselage station 78 to station 92.95 pilots	1	DN	
	181-53178-301	FLOOR ASSEMBLY, Fuselage station 78 to station 92.95 pilots	1	DP	
	ATTACHING PARTS				
	AN507-1032R8	SCREW	5		
	SP1561-1032-10	SCREW ASSEMBLY (SH) (78189)	8		
	---*---				
-4	181-53176-7	FLOOR, Fuselage station 61.906 to station 78 pilots forward LH	1		
-5	181-53176-8	FLOOR, Fuselage station 61.906 to station 78 pilots forward RH	1		
	ATTACHING PARTS				
	AN507-1032R10	SCREW	20		
	SP1561-1032-10	SCREW ASSEMBLY (SH) (78189)	16		
	---*---				
-6	181-53183-101	FAIRING ASSEMBLY, Console close-out fuselage station 71.75 to station 81.296 - LH	1	ET	
	181-53183-301	FAIRING ASSEMBLY, Console close-out fuselage station 71.75 to station 81.296 - LH	1	FR	
	ATTACHING PARTS				
	SP1561-1032-10	SCREW ASSEMBLY (SH) (78189)	7		
	---*---				
-7	181-53184-13	FAIRING ASSEMBLY, Console close-out fuselage station 81.296 RH	1	ET	
	181-53184-21	FAIRING ASSEMBLY, Console close-out fuselage station 81.296 RH	1	FR	
	ATTACHING PARTS				
	SP1561-1032-10	SCREW ASSEMBLY (SH) (78189)	6		
	---*---				
-8	181-53247-101	FAIRING, Console fuselage station 75 canopy and landing gear emergency handle - support bracket LH	1	BR	
	209-73363	FAIRING, Console fuselage station 75 canopy and landing gear emergency handle - (superseded by 209-73363-31 for future procurement)	1	FX	
	209-73363-3	FAIRING, Console fuselage station 75 canopy and landing gear emergency handle - support bracket (superseded by 209-73363-21 for future procurement)	1	FR	
	209-73363-21	FAIRING, Console fuselage station 75 canopy and landing gear emergency handle - support bracket (supersedes 209-73363-3 for future procurement)	1	FR	
	209-73363-31	FAIRING, Console fuselage station 75 canopy and landing gear emergency handle - (supersedes 209-73363 for future procurement)	1	FX	
	ATTACHING PARTS				
	AN520-10R10	SCREW	7		
	---*---				
-9	209-53209-5	FAIRING, Console fuselage station 75 emergency landing gear support bracket --- (superseded by 209-53209-11 for future procurement)	1		
	209-53209-11	FAIRING, Console fuselage station 75 emergency landing gear support bracket --- (supersedes 209-53209-5 for future procurement)	1		
	ATTACHING PARTS				
	AN520-10R10	SCREW	7		
	---*---				
-10	181-53180	CHANNEL ASSEMBLY, Console close-out fuselage station 81.296 RH (superseded by 181-53180-11 for future procurement)	1		
	181-53180-11	CHANNEL ASSEMBLY, Console close-out fuselage station 81.296 RH (supersedes 181-53180 for future procurement)	1		
	ATTACHING PARTS				
	AN520-10R10	SCREW	2		
	---*---				
-11	181-53182-11	COVER, Pilots console quadrant handhold	1		
	ATTACHING PARTS				
	AN520-10R8	SCREW	2		
	---*---				
-12	181-53153-101	PANEL ASSEMBLY, Pilots console LH side	1	BR	
	181-53153-201	PANEL ASSEMBLY, Pilots console LH side	1	BS	
	99836	. PIN (UC) (61864)	4	BR	
	99836	. PIN (UC) (61864)	2	BS	
	98265-1-150	. STUD (UC) (61864) (forward)	1		
	98265-1-130	. STUD (UC) (61864) (forward intermediate)	1	BR	
	98265-1-120	. STUD (UC) (61864) (aft intermediate and aft)	2	BR	
	98265-1-120	. STUD (UC) (61864) (aft)	1	BS	
-13	181-53153-101	PANEL ASSEMBLY, Pilots console RH side	1	BR	
	181-53153-201	PANEL ASSEMBLY, Pilots console RH side	1	BS	
	99836	. PIN (UC) (61864)	4	BR	
	99836	. PIN (UC) (61864)	2	BS	
	98265-1-150	. STUD (UC) (61864) (forward)	1		
	98265-1-130	. STUD (UC) (61864) (forward intermediate)	1	BR	
	98265-1-120	. STUD (UC) (61864) (aft intermediate and aft)	2	BR	
	98265-1-120	. STUD (UC) (61864) (aft)	1	BS	
-14	181-53267	PANEL, LH rear console closeout station 113.5	1		
	ATTACHING PARTS				
	AN520-10R8	SCREW	1		
	---*---				
-15	181-53189	COVER ASSEMBLY, Pilots console fuselage station 113.5 LH	1		
	ATTACHING PARTS				
	AN520-10R10	SCREW	4		
	---*---				
-16	181-53175-31	PLATE ASSEMBLY, Pilots console RH rear	1	ET	
	181-53175-41	PLATE ASSEMBLY, Pilots console RH rear	1	FR	

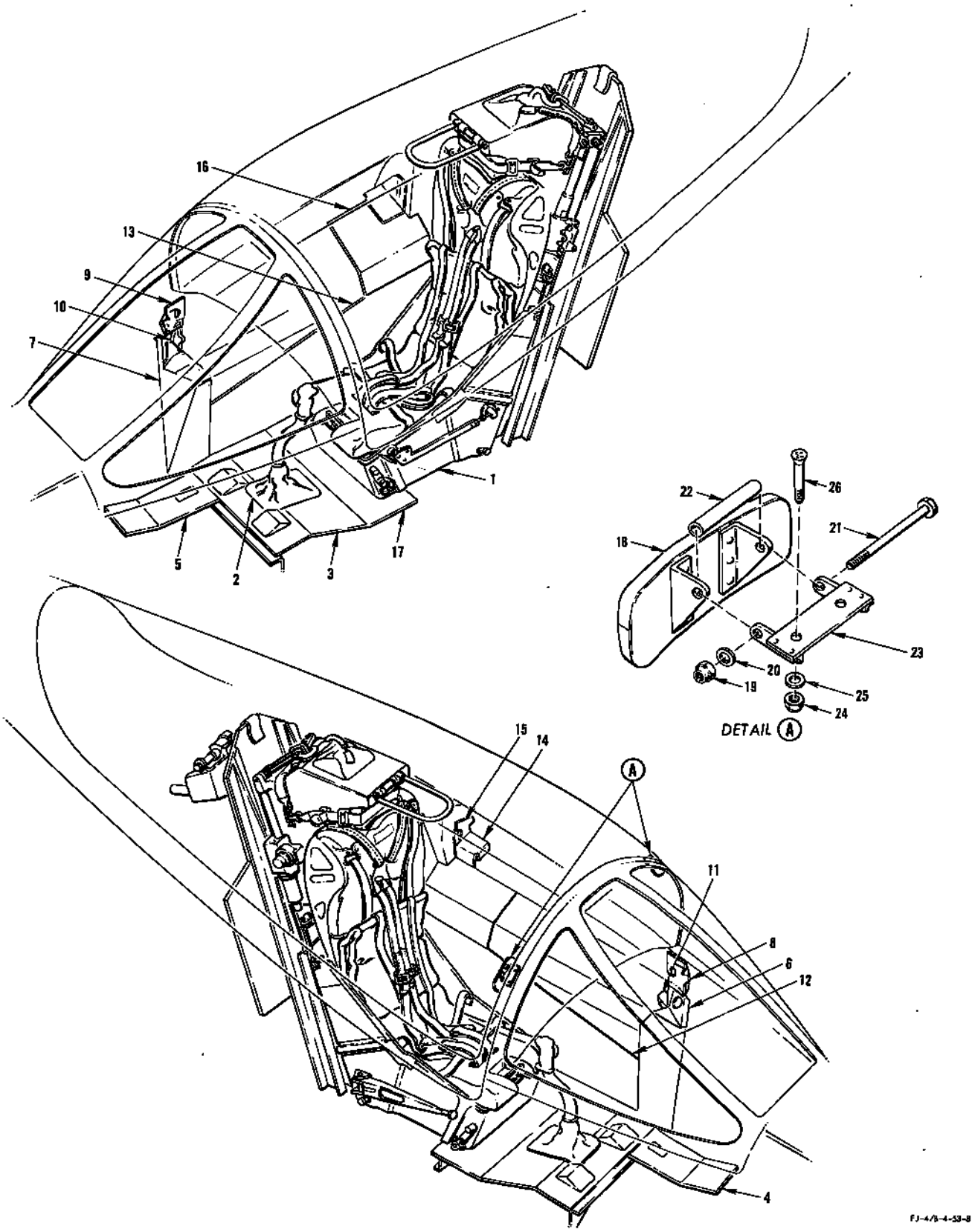

FIGURE 57A - PILOTS FURNISHINGS - APPLICABLE TO MARTIN-BAKER EQUIPPED AIRCRAFT

PILOTS FURNISHINGS - APPLICABLE TO MARTIN-BAKER EQUIPPED AIRCRAFT

FIGURE & INDEX NO.	PART NUMBER	1 2 3 4 5 6 7 NOMENCLATURE	UNITS PER ASSY.	USABLE ON CODE	S/C NO.
57A	98265-2-190	. STUD (UC) (61864)	2		
	99836	. PIN (UC) (61864)	2		
	PC3-1/2	. CUP (DZ) (72794)	2		
	PS3-1/2	. SPRING (DZ) (72794)	2		
	PF3-1/2-38	. FASTENER (DZ) (72794)	2		
	PRB3-1/2	. RECEPTACLE (DZ) (72794)	2		
-17	181-532108-101	COVER ASSEMBLY, Pilots floor station 92.95 to station 107.38	1		
	ATTACHING PARTS				
	AN515-8R8	SCREW	10		
	---*---				
	AN230B20	GROMMET	9		
	AN230W820	WASHER	9		
-18	181-53177	MIRROR, Pilots rear view assembly of (superseded by 181-53177-11 for future procurement)	2		
	181-53177-11	MIRROR, Pilots rear view assembly of (supersedes 181-53177 for future procurement)	2		
-19	AN365-1032	NUT	2		
-20	2W18-10M	WASHER, Flat (NA) (89372)	2		
-21	AN3-33A	BOLT	2		
-22	NAS43DD3-184	SPACER	2		
-23	194-53153	BRACKET ASSEMBLY, Pilots rear vision mirror attaching	2		
-24	AN363C1032	NUT	4		
-25	2W18-10M	WASHER, Flat (NA) (89372)	4		
-26	7S16CN10-16	SCREW, 100° flush head corrosion-resistant steel (NA) (89372)	4		

THIS PAGE LEFT BLANK INTENTIONALLY

PILOTS EJECTION SEAT HEADREST ASSEMBLY

FIGURE & INDEX NO.	PART NUMBER	1 2 3 4 5 6 7 NOMENCLATURE	UNITS PER ASSY.	USABLE ON CODE	S/C NO.
58	209-53126	HEADREST ASSEMBLY, Pilots ejection seat	1	ET	
	209-53126-101	HEADREST ASSEMBLY, Pilots ejection seat	1	FR	
		ATTACHING PARTS			
	AN3-5A	BOLT	4		
	2W18-10	WASHER, Flat (NA) (89372)	8		
	AN365-1032	NUT	4		
		---*---			
-1	AN364-1032	. NUT	2		
-2	AN975-3	. WASHER	2		
-3	AN386-1-6A	. PIN	2		
-4	209-53193	. HANDLE, Headrest pilots ejection seat side	1		
-5	209-53177	. TUBE, Headrest pilots ejection seat lower torque	1		
-6	209-53195	. ARM, Headrest pilots ejection seat linkage lower	1		
-7	AN393-11	. PIN	2		
-8	2W18-10M	. WASHER, Flat (NA) (89372)	4		
-9	209-53194	. LINK, Headrest pilots ejection seat lower clevis	1		
	209-53126-11	. HEADREST SUBASSEMBLY, Pilots ejection seat	1		
-10	AN365-428	. . NUT	1		
-11	2W18-416M	. . WASHER, Flat (NA) (89372)	1		
-12	2W1AL50-35-32	. . WASHER, Plain (NA) (89372)	1		
-13	4B21M-S4-005	. . BUSHING, Spacer (NA) (89372)	1		
-14	2W1AL50-35-16	. . WASHER, Plain (NA) (89372)	AR		
-15	AN509-416R13	. . SCREW	1		
-16	209-53186	. . CRANK, Headrest pilots ejection seat retainer	1		
-17	209-53132	. . CRANK ARM, Initiator headrest pilots ejection seat	1		
-18	2W18-10M	. WASHER, Flat (NA) (89372)	1		
-19	AN393-33	. PIN	1		
-20	209-53183	. PLUG, Headrest pilots ejection seat retainer	1		
-21	209-53197	. SPRING, Compression	1		
-22	2W1-68-43-20	. WASHER, Plain (NA) (89372)	1		
-23	209-53184	. CLUTCH, Headrest pilots ejection seat	1		
-24	AN320-3	. NUT	1		
-25	2W18-10M	. WASHER, Flat (NA) (89372)	2		
-26	4B21B3-005	. BUSHING, Spacer (NA) (89372)	1		
-27	AN23-10	. BOLT	1		
-28	AN365-1032	. NUT	1		
-29	2W18-10M	. WASHER, Flat (NA) (89372)	1		
-30	AN509-10R13	. SCREW	1		
-31	4B21B3-008	. BUSHING, Spacer (NA) (89372)	1		
-32	209-53185	. SLIDE, Headrest pilots ejection seat	1		
-33	2W1AL50-35-32	. WASHER, Plain (NA) (89372)	1		
-34	2W1AL50-35-16	. WASHER, Plain (NA) (89372)	AR		
-35	AN520-10R7	. SCREW	2		
-36	AN520-10R10	. SCREW	2		
-37	2W18-10M	. WASHER, Flat (NA) (89372)	4		
-38	209-53148	. COVER ASSEMBLY, Pilots ejection seat curtain shelf	1		
-39	79-012-062-1000	. ROLLPIN (EN) (72962)	2		
	209-53144	. CURTAIN ASSEMBLY, Pilots ejection seat face	1		
	209-53144-17	. . CURTAIN SUBASSEMBLY, Pilots ejection seat face	1		
-40	AN664C2	. . . TERMINAL	2		
-41	209-53151	. . . HANDLE ASSEMBLY, Pilots ejection seat face curtain	1		
-42	RA2-487-2	. . . BALL TERMINAL (ACA) (01976)	2		
-43	209-53144-15	. . . CABLE, Pilots ejection seat face curtain subassembly	2		
-44	AN230B10	. . GROMMET	20		
-45	AN365-440	. NUT	8		
-46	2W18-4	. WASHER, Flat (NA) (89372)	8		
-47	AN507-440R10	. SCREW	8		
-48	209-53126-3	. FAIRLEAD, Pilots ejection seat headrest assembly (forward)	2		
-49	209-53126-5	. FAIRLEAD, Pilots ejection seat headrest assembly (aft)	2		
-50	AN365-428	. NUT	5		
-51	2W18-416M	. WASHER, Flat (NA) (89372)	10		
-52	AN4-14A	. BOLT	4		
-53	AN4-13A	. BOLT	1		
-54	4B21M-S4-012	. BUSHING, Spacer (NA) (89372)	1		
-55	209-53178	. TUBE, Headrest pilots ejection seat upper torque	1		
-56	209-53126-23	BUSHING, Pilots ejection seat headrest assembly (make from 4B21B12-031--(NA) (89372))	1		
-57	209-53159	. RETAINER, Pilots headrest flat torsion spring	1		
-58	AN365-428	. NUT	1		
-59	2W18-416M	. WASHER, Flat (NA) (89372)	1		
-60	209-53149	. PIN, Torsion spring headrest pilots ejection seat	1		
-61	209-53143	. SPRING, Flat torsion ejection seat	1		
-62	209-53137-1	. PULLEY, Face curtain cable ejection seat LH	1		
-63	209-53137-2	. PULLEY, Face curtain cable ejection seat RH	1		
-64	AN364-1032	. . NUT	4		
-65	2W18-10	. . WASHER, Flat (NA) (89372)	4		
-66	AN509-10R13	. . SCREW	4		
	209-53180	. . STOP ASSEMBLY, Headrest pilots ejection seat	1		
-67	AN364-428	. . . NUT	1		
-68	2W18-416M	. . . WASHER, Flat (NA) (89372)	1		
-69	AN509-416R12	. . . SCREW	1		
-70	4B21M-S4-012	. . . BUSHING, Spacer (NA) (89372)	1		
-71	209-53180-3	. . . PLATE, Headrest pilots ejection seat stop assembly	1		
-72	209-53140-3	. CRANK, Catapult headrest ejection seat	2		

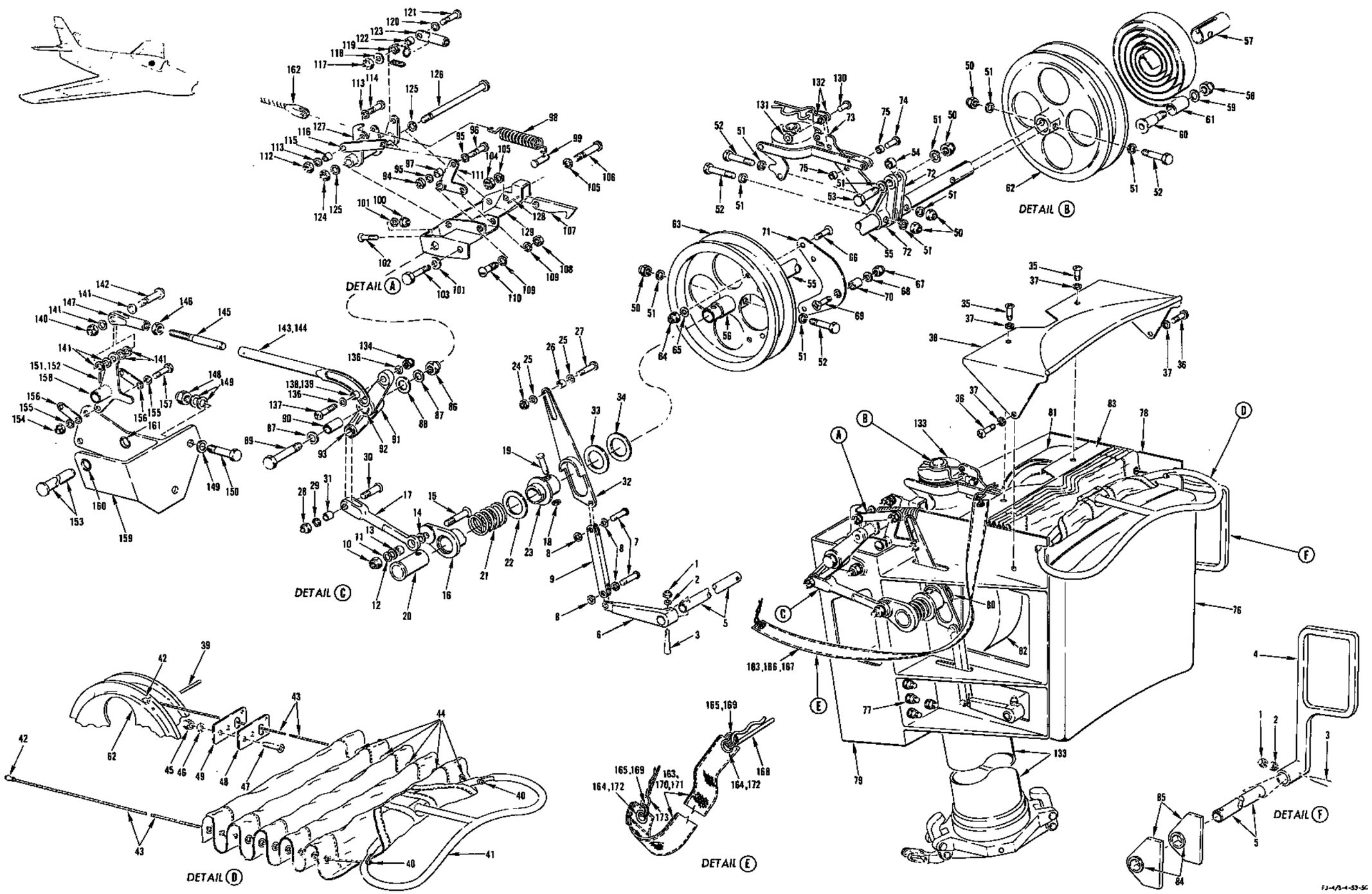

FIGURE 58 - PILOTS EJECTION SEAT HEADREST ASSEMBLY

PILOTS EJECTION SEAT HEADREST ASSEMBLY

FIGURE & INDEX NO.	PART NUMBER	1	2	3	4	5	6	7	NOMENCLATURE	UNITS PER ASSY.	USABLE ON CODE	S/C NO.
58-73	209-53187	.	TRIGGER ASSEMBLY, Headrest pilots ejection seat							1		
-74	AN435-6-10	.	.	RIVET						1		
-75	4B21S3-006	.	.	BUSHING, Spacer (NA) (89372)						2		
-76	209-53130	.	CUSHION, Pilots ejection seat headrest (superseded by 209-53130-3 for future procurement)							1	LE	
	209-53130-3	.	CUSHION, Pilots ejection seat headrest (supersedes 209-53130 for future procurement)							1	KY	
	209-53127	.	SUPPORT ASSEMBLY, Pilots ejection seat headrest							1	ET	
	209-53127-101	.	SUPPORT ASSEMBLY, Pilots ejection seat headrest							1	FR	
	209-53146	.	.	INTERCOSTAL, Headrest ejection seat						1		
	ATTACHING PARTS											
-77	AN3-6A	.	.	BOLT						10		
	2W18-10	.	.	WASHER, Flat (NA) (89372)						20		
	AN365-1032	.	.	NUT						10		
	---*---											
-78	209-53128-1	.	.	CASTING ASSEMBLY, Headrest side pilots ejection seat LH						1		
	4B19B12-11	.	.	.	BUSHING, Press fit plain (NA) (89372)					1		
-79	209-53128-2	.	.	CASTING ASSEMBLY, Headrest side pilots ejection seat RH						1		
-80	4B19B12-17	.	.	.	BUSHING, Press fit plain (NA) (89372)					1		
-81	209-53147-1	.	.	GUARD, Pulley headrest pilots ejection seat LH						1		
-82	209-53147-2	.	.	GUARD, Pulley headrest pilots ejection seat RH						1		
-83	209-53135	.	.	SHELF, Pilots ejection seat curtain						1		
	209-53176-1	.	.	SUPPORT ASSEMBLY, Headrest pilots ejection seat torque tube LH						1		
	209-53176-2	.	.	SUPPORT ASSEMBLY, Headrest pilots ejection seat torque tube RH						1		
-84	4B20S8-006	.	.	.	BUSHING, Press fit flanged (NA) (89372)					1		
-85	209-53176-3	.	.	.	PLATE, Headrest pilots ejection seat torque tube support assembly					1		
	209-53113	.	.	SUPPORT, Pilots ejection seat inertia reel LH mounting						1	FR	
	209-53115	.	.	SUPPORT, Pilots ejection seat inertia reel RH mounting						1	FR	
	ATTACHING PARTS											
	AN3-10A	.	.	BOLT						3	FR	
	2W18-10	.	.	WASHER, Flat (NA) (89372)						6	FR	
	AN364-1032	.	.	NUT						3	FR	
	---*---											
-86	AN364-524	.	NUT							1		
-87	2W18-516M	.	WASHER, Flat (NA) (89372)							2		
-88	2W1AL28-28-16	.	WASHER, Plain (NA) (89372)							1		
-89	NAS464-5-20	.	BOLT							1		
-90	4B21B5-027	.	BUSHING, Spacer (NA) (89372)							1		
-91	209-53133	.	BELLCRANK ASSEMBLY, Initiator headrest pilots ejection seat							1		
-92	4B19B7-025	.	.	BUSHING, Press fit plain (NA) (89372)						1		
-93	4B19B5-007	.	.	BUSHING, Press fit plain (NA) (89372)						1		
-94	AN320-3	.	NUT							1		
-95	2W18-10M	.	WASHER, Flat (NA) (89372)							2		
-96	AN23-10	.	BOLT							1		
-97	4B21B3-005	.	BUSHING, Spacer (NA) (89372)							1		
-98	209-53198	.	SPRING, Tension							1		
-99	AN393-7	.	PIN							1		
-100	AN364-428	.	NUT							1		
-101	2W18-416M	.	WASHER, Flat (NA) (89372)							2		
-102	AN509-416R9	.	SCREW							1		
-103	AN4-7A	.	BOLT							1		
-104	AN320-3	.	NUT							1		
-105	2W18-10M	.	WASHER, Flat (NA) (89372)							2		
-106	AN25-15	.	BOLT							1		
-107	209-53182	.	LATCH, Headrest pilots ejection seat drum							1		
-108	AN320-3	.	NUT							1		
-109	2W18-10M	.	WASHER, Flat (NA) (89372)							2		
-110	AN23-19	.	BOLT							1		
-111	209-53179	.	BELLCRANK, Headrest pilots ejection seat drum latch							1		
-112	AN320-3	.	NUT							1		
-113	2W18-10M	.	WASHER, Flat (NA) (89372)							2		
-114	AN23-10	.	BOLT							1		
-115	4B21B3-005	.	BUSHING, Spacer (NA) (89372)							1		
-116	209-53192	.	LINK, Headrest pilots ejection seat upper							1		
-117	AN320-3	.	NUT							1		
-118	2W1AL12-18-032	.	WASHER, Plain (NA) (89372)							1		
-119	209-53199	.	SPRING, Pilots ejection seat latch torsion							1		
-120	2W18-10M	.	WASHER, Flat (NA) (89372)							1		
-121	AN23-12	.	BOLT							1		
-122	4B21B3-005	.	BUSHING, Spacer (NA) (89372)							2		
-123	209-53191	.	PIN, Headrest pilots ejection seat latch							1		
-124	AN320-3	.	NUT							1		
-125	2W18-10M	.	WASHER, Flat (NA) (89372)							2		
-126	AN23-48	.	BOLT							1		
-127	209-53196	.	BELLCRANK, Headrest canopy cable actuating							1		
-128	52-012-062-0562	.	ROLLPIN (EN) (72962)							1		
-129	209-53188	.	SUPPORT, Headrest pilots ejection seat bellcrank							1		
-130	AN393-11	PIN								1		
-131	2W18-10	WASHER, Flat (NA) (89372)								1		
-132	209-53190	LINK, Headrest pilots ejection seat safety pin								2		
-133	181-53225	CATAPULT ASSEMBLY, Pilots ejection seat (see figure 62 for breakdown)								1		409
	209-53134	LINK ASSEMBLY, Pilots ejection seat canopy firing (superseded by 209-53134-11 for future procurement)								1	RG	496

PILOTS EJECTION SEAT HEADREST ASSEMBLY

FIGURE & INDEX NO.	PART NUMBER	1 2 3 4 5 6 7 NOMENCLATURE	UNITS PER ASSY.	USABLE ON CODE	S/C NO.
58	209-53134-11	LINK ASSEMBLY, Pilots ejection seat canopy firing (supersedes 209-53134 for future procurement)	1	RF	
	ATTACHING PARTS				
-134	AN365-428	NUT	1		
-135	2W18-416M	WASHER, Flat (NA) (89372)	2	NH	
-136	244-53010	WASHER, Pilots ejection seat canopy firing link	2	ME	
-137	NAS222-14	SCREW	1		496
-138	4B21M-S4-005	BUSHING, Spacer (NA) (89372)	1	NH	496
-139	244-53011	BUSHING, Pilots ejection seat canopy firing link	1	ME	
-140	AN310-3	NUT	1		
-141	2W18-10L	WASHER, Flat (NA) (89372)	6		
-142	AN23-10	BOLT (aft)	1		
	---*---				
-143	209-53153	. ROD, Pilots ejection seat canopy firing slide	1	RG	496
-144	209-53153-3	. ROD, Pilots ejection seat canopy firing slide	1	RF	
-145	209-53152	. ROD, Pilots ejection seat canopy firing	1		496
-146	AN315-3R	. NUT	1		
-147	AN665-21R	. TERMINAL	1		
	209-53292	SHELF ASSEMBLY, Canopy initiator firing switch	1		
	ATTACHING PARTS				
-148	AN365-524	NUT	2		
-149	2W18-516	WASHER, Flat (NA) (89372)	5		
-150	AN5-12A	BOLT	2		
	---*---				
-151	79-028-125-0500	. ROLLPIN (EN) (72962)	1	RK	470
-152	AN435M4	. RIVET	1	MS	
-153	209-53294	. SHAFT, Canopy initiator firing	1		
-154	AN310-3	. NUT	1		
-155	2W18-10	. WASHER, Flat (NA) (89372)	2		
-156	209-53292-3	. LINK, Canopy initiator firing switch shelf assembly	2		
-157	AN3-5	. BOLT	1		
-158	209-53295	. BELLCRANK ASSEMBLY, Canopy initiator firing	1		
-159	209-53293	. SHELF, Canopy initiator firing switch	1		
-160	4B18-6-125	. BUSHING, Shoulder (NA) (89372)	1		
-161	4B18-6-156	. BUSHING, Shoulder (NA) (89372)	1		
-162	181-53048-101	CABLE ASSEMBLY, Ejection gun pin release (see Fwd Fus - Canopy)	1		
-163	12S2	STREAMER, Red warning (NA) (89372)	1	DN	444
-164	AN230B10	. GROMMET	1	DN	444
-165	5R10	RING, Chain retainer (NA) (89372)	1	DN	444
-166	209-53118	STREAMER ASSEMBLY, Primary canopy initiator and headrest trigger mechanism (superseded by 209-53118-11 for future procurement)	1	RH	
-167	209-53118-11	STREAMER ASSEMBLY, Primary canopy initiator and headrest trigger mechanism (supersedes 209-53118 for future procurement)	1	RJ	
-168	AN415-2	. LOCKPIN	1		
-169	5R10	. RING, Chain retainer (NA) (89372)	2		
-170	12S2	. STREAMER, Red warning (NA) (89372)	1	RH	
-171	12S2	. STREAMER, Red warning (NA) (89372)	2	RJ	
-172	AN230B10	. . GROMMET	1		
-173	ALX-32-12	PIN (FRAR) (00000) (furnished with BLX-32-1 type M-3 initiator (FRAR) (00000) (GFP))	1		

PILOTS REAR ARMOR PLATE AND SEAT CATAPULT RELEASE

FIGURE & INDEX NO.	PART NUMBER	1 2 3 4 5 6 7 NOMENCLATURE	UNITS PER ASSY.	USABLE ON CODE	S/C NO.
59-49	181-53133-3	PIN, Pilots ejection seat catapult release		2	
-50	AN161-16RS	FORK		1	
-51	AN155-16S	BARREL		1	
-52	AN161-16LS	FORK		1	
-53	209-31207-3	PIN, Fuselage station 95 to fuselage station 131 frame assembly		1	
-54	181-53220	FOOT, Pilots ejection seat catapult releasing		1	
-55	181-53206	ROD, Pilots ejection seat catapult release		1	
-56	181-53124	GUIDE, Pilots ejection seat catapult release		2	
	ATTACHING PARTS				
-57	AN365-1032	NUT		4	
-58	AN960D10L	WASHER		8	
-59	AN3-7	BOLT		4	

---*---

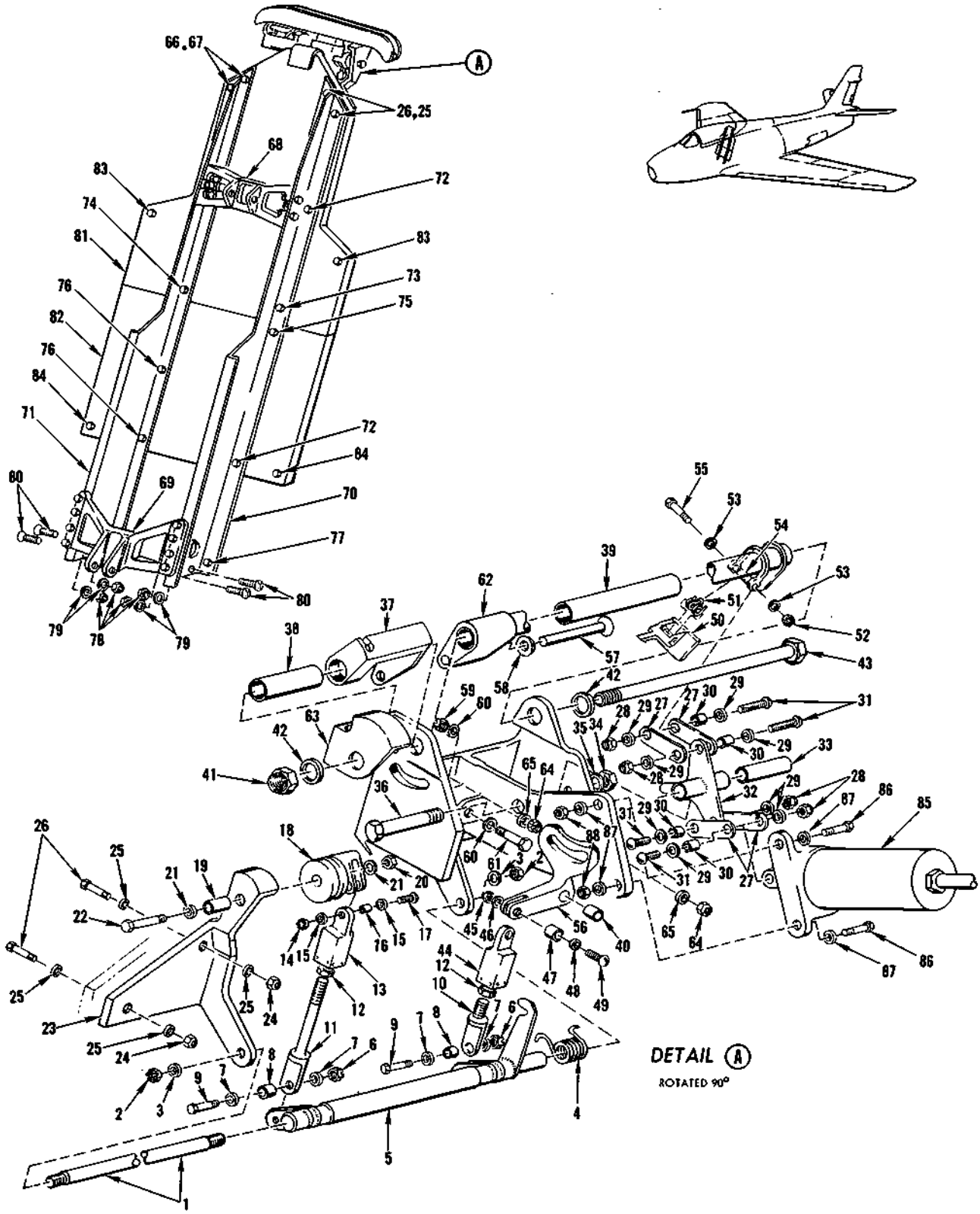

FIGURE 59A - ARMOR PLATE AND ATTACHING PARTS - APPLICABLE TO MARTIN-BAKER EQUIPPED AIRCRAFT

ARMOR PLATE AND ATTACHING PARTS - APPLICABLE TO MARTIN-BAKER EQUIPPED AIRCRAFT

FIGURE & INDEX NO.	PART NUMBER	1 2 3 4 5 6 7 NOMENCLATURE	UNITS PER ASSY.	USABLE ON CODE	S/C NO.
59A-1	209-53053	SHAFT, Ejection seat lower spacer	1		
	ATTACHING PARTS				
-2	AN320-4	NUT	2		
-3	2W18-416	WASHER, Flat (NA) (89372)	2		
	---*---				
-4	209-53084	SPRING, Torsion pilot seat ejection mechanism	1		
-5	209-53066	TUBE, Pilot seat ejection mechanism lower	1		
	ATTACHING PARTS				
-6	AN320-3	NUT	2		
-7	2W18-10M	WASHER, Flat (NA) (89372)	4		
-8	4B21M-S3-006	BUSHING, Spacer (NA) (89372)	2		
-9	AN3-6	BOLT	2		
	---*---				
-10	209-53069-3	BOLT, Pilot seat ejection mechanism eye	1		
-11	209-53069-5	BOLT, Pilot seat ejection mechanism eye	1		
	ATTACHING PARTS				
-12	1N7-4	NUT, Check (NA) (89372)	2		
	---*---				
	209-53082	MECHANISM ASSEMBLY, Pilot seat ejection LH side	1		
-13	209-53065-5	. ROD END, Pilot seat mechanism	1		
	ATTACHING PARTS				
-14	AN320-3	. NUT	1		
-15	2W18-10M	. WASHER, Flat (NA) (89372)	2		
-16	4B21M-S3-007	. BUSHING, Spacer (NA) (89372)	1		
-17	AN23-12	. BOLT	1		
	---*---				
-18	209-53080	. DRUM, Pilot seat ejection mechanism	1		
-19	209-53078-7	. SPACER, Pilot seat ejection mechanism	1		
	ATTACHING PARTS				
-20	AN320-4	. NUT	1		
-21	2W18-416	. WASHER, Flat (NA) (89372)	2		
-22	AN4-11	. BOLT	1		
	---*---				
-23	209-53079	. SUPPORT, Pilot seat ejection mechanism LH	1		
	ATTACHING PARTS				
-24	AN365-524	. NUT	2		
-25	2W18-516	. WASHER, Flat (NA) (89372)	4		
-26	AN5-13A	. BOLT	2		
	---*---				
	209-53083	. MECHANISM ASSEMBLY, Pilot seat ejection RH	1		
-27	209-53056	. LINK, Canopy initiator firing switch	4		
	ATTACHING PARTS				
-28	AN310-3	. NUT	4		
-29	2W18-10M	. WASHER, Flat (NA) (89372)	8		
-30	4B21M-S3-003	. BUSHING, Spacer (NA) (89372)	4		
-31	AN23-9	. BOLT	4		
	---*---				
-32	209-53057	. BELLCRANK ASSEMBLY, Canopy initiator firing switch	1		
-33	209-53078-3	. SPACER, Pilot seat ejection mechanism	1		
	ATTACHING PARTS				
-34	AN320-4	. NUT	1		
-35	2W18-416	. WASHER, Flat (NA) (89372)	1		
-36	AN4-23	. BOLT	1		
	---*---				
-37	209-53070	. BELLCRANK, Pilot seat ejection mechanism	1		
-38	209-53077-5	. SPACER, Pilot seat ejection mechanism upper	1		
-39	209-53077-3	. SPACER, Pilot seat ejection mechanism	1		
-40	209-53078-5	. SPACER, Pilot seat ejection mechanism	1		
	209-53086	. TUBE ASSEMBLY, Pilot seat ejection mechanism RH	1		
	ATTACHING PARTS				
-41	AN310-6	. NUT	1		
-42	2W18-616	. WASHER, Flat (NA) (89372)	2		
-43	NAS510-6-70	. BOLT	1		
	---*---				
-44	209-53065-3	. . ROD END, Pilot seat mechanism	1		
	ATTACHING PARTS				
-45	AN320-3	. . NUT	1		
-46	2W18-10M	. . WASHER, Flat (NA) (89372)	1		
-47	4B21M-S3-007	. . BUSHING, Spacer (NA) (89372)	1		
-48	2W18-10	. . WASHER, Flat (NA) (89372)	1		
-49	AN23-11	. . BOLT	1		
	---*---				
-50	209-53085	. . LATCH, Pilot seat ejection mechanism	1		
-51	209-53046	. . SPRING, Torsion pilot seat ejection mechanism	1		
	ATTACHING PARTS				
-52	AN320-3	. . NUT	1		
-53	2W18-10M	. . WASHER, Flat (NA) (89372)	2		
-54	4B21M-S3-020	. . BUSHING, Spacer (NA) (89372)	1		
-55	AN23-18	. . BOLT	1		
	---*---				
-56	209-53074	. . BELLCRANK, Pilot seat ejection mechanism intermediate	1		
-57	209-53072	. . COLLAR, Pilot seat ejection mechanism	1		
-58	209-53073	. . PIN, Pilot seat ejection mechanism lock	1		

ARMOR PLATE AND ATTACHING PARTS - APPLICABLE TO MARTIN-BAKER EQUIPPED AIRCRAFT

FIGURE & INDEX NO.	PART NUMBER	1	2	3	4	5	6	7	NOMENCLATURE	UNITS PER ASSY.	USABLE ON CODE	S/C NO.
59A	ATTACHING PARTS											
-59	AN320-4	.	.						NUT	1		
-60	2W18-416M	.	.						WASHER, Flat (NA) (89372)	2		
-61	AN4-10	.	.						BOLT	1		
	---*---											
-62	209-53063	.	.						TUBE ASSEMBLY, Canopy initiator firing mechanism	1		
-63	209-53090	.							SUPPORT, Pilot seat ejection mechanism RH	1		
	ATTACHING PARTS											
-64	AN365-524	.							NUT	2		
-65	2W18-516	.							WASHER, Flat (NA) (89372)	2		
-66	AN960D516L	.							WASHER	2		
-67	AN5-13A	.							BOLT	2		
	---*---											
-68	209-53054-3								FITTING, Ejection seat gun upper	1		
	ATTACHING PARTS											
	AN365-524								NUT	2		
	2W10-5								WASHER, Countersunk (NA) (89372)	2		
	2W18-516M								WASHER, Flat (NA) (89372)	2		
	MS20005-18								BOLT	2		
	AN365-428								NUT	4		
	2W18-416M								WASHER, Flat (NA) (89372)	8		
	AN4-10A								BOLT	4		
	---*---											
-69	209-53055-3								FITTING, Ejection seat gun lower	1		
	ATTACHING PARTS											
	AN365-428								NUT	8		
	2W18-416M								WASHER, Flat (NA) (89372)	16		
	AN4-13A								BOLT	6		
	AN4-15A								BOLT	2		
	---*---											
-70	181-53094-101								RAIL, Pilot ejection seat guide LH	1		
-71	181-53094-201								RAIL, Pilot ejection seat guide RH	1		
	ATTACHING PARTS											
-72	AN365-524								NUT	2		
	2W18-516								WASHER, Flat (NA) (89372)	9		
	2W18-516M								WASHER, Flat (NA) (89372)	2		
	AN5-13A								BOLT	2		
-73	AN365-524								NUT	2		
	2W18-516								WASHER, Flat (NA) (89372)	8		
	AN5-13A								BOLT	2		
-74	AN365-524								NUT	2		
	2W18-516								WASHER, Flat (NA) (89372)	8		
	AN5-12A								BOLT	2		
-75	AN365-524								NUT	6		
	AN960D516								WASHER	12		
	AN960D516								WASHER	6		
	AN5-11A								BOLT	6		
-76	AN365-524								NUT	6		
	AN960D516								WASHER	8		
	AN960D516L								WASHER	6		
	AN5-11A								BOLT	6		
-77	AN365-524								NUT	2		
	AN960D516								WASHER	4		
	AN960D516L								WASHER	2		
	AN5-11A								BOLT	2		
	181-31349								SPACER, Fuselage canted station 115 seat rail lower	2		
-78	AN365-428								NUT	4		
-79	2W18-416								WASHER, Flat (NA) (89372)	4		
-80	AN509-416R12								SCREW	4		
	---*---											
-81	181-73502-101								ARMOR PLATE, Pilots upper	1		
-82	181-73503								ARMOR PLATE, Pilots lower	1		
	ATTACHING PARTS											
-83	AN365-524								NUT	2		
	2W18-516								WASHER, Flat (NA) (89372)	6		
	AN5-11A								BOLT	2		
-84	AN365-524								NUT	2		
	AN960D516								WASHER	2		
	AN960D516L								WASHER	2		
	AN5-10A								BOLT	2		
-85	BLX-32-1								INITIATOR, Type M-3 (FRAR) (00000) (GFP) (see figure 63 for installation)	1		
	ATTACHING PARTS											
-86	AN4-6A								BOLT	2		
-87	2W18-416								WASHER, Flat (NA) (89372)	4		
-88	AN365-428								NUT	2		
	---*---											

THIS PAGE LEFT BLANK INTENTIONALLY

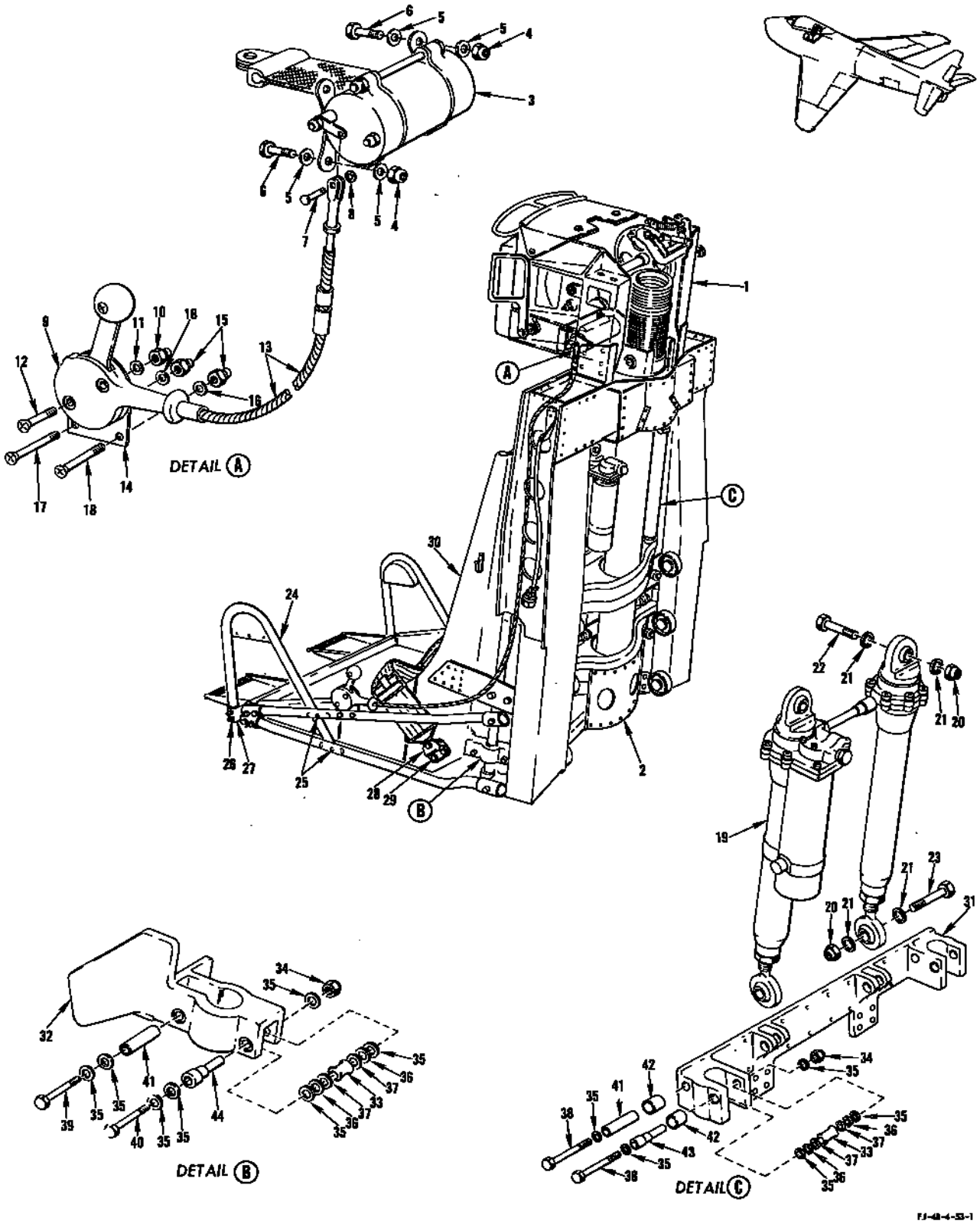

FIGURE 60 - PILOTS SEAT ASSEMBLY - APPLICABLE TO AIRCRAFT CODED (FR)

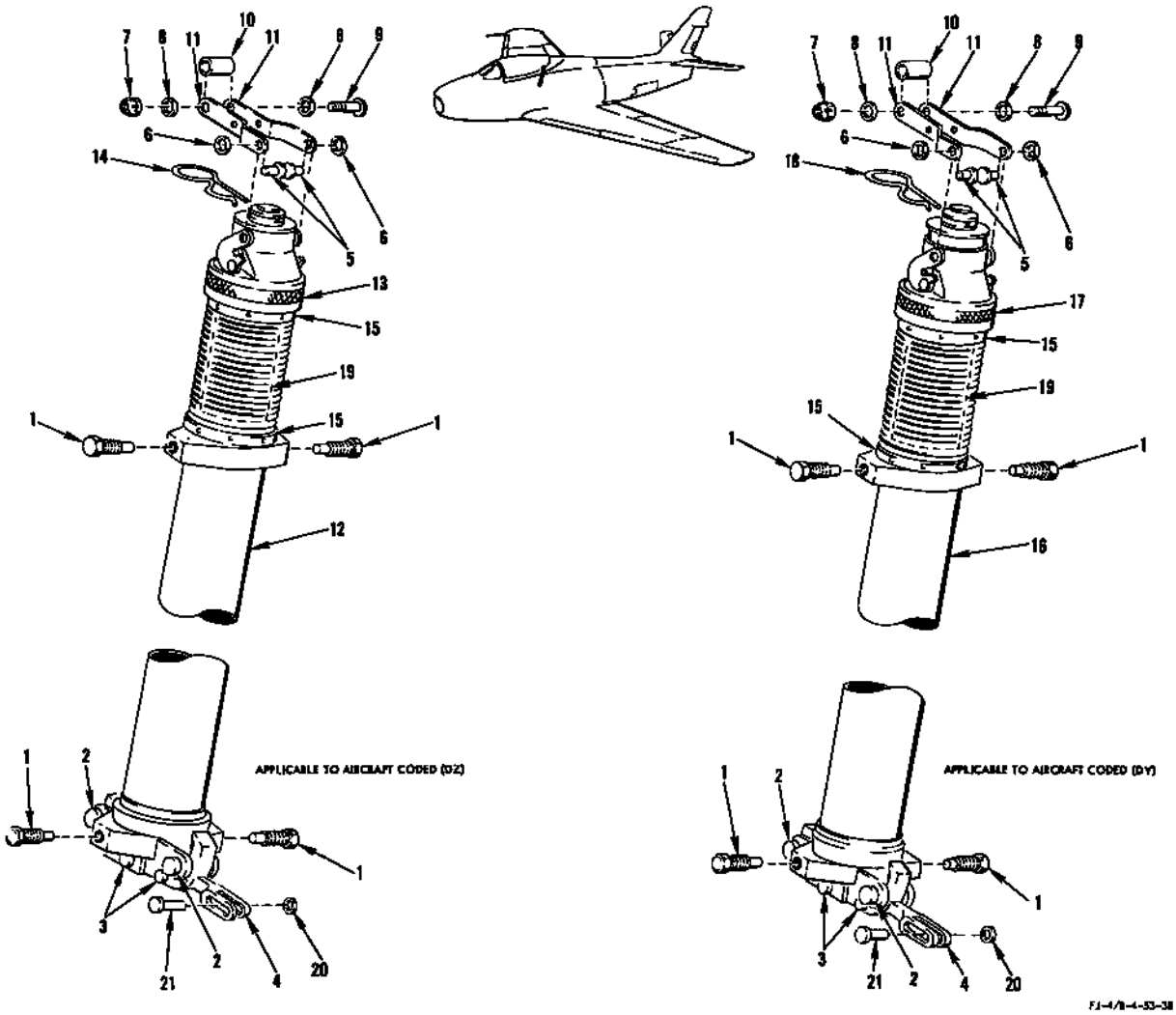

FIGURE 62 - PILOTS EJECTION SEAT CATAPULT ASSEMBLY

FIGURE & INDEX NO.	PART NUMBER	1 2 3 4 5 6 7 NOMENCLATURE	UNITS PER ASSY.	USABLE ON CODE	S/C NO.
62	181-53225-101	CATAPULT ASSEMBLY, Pilots ejection seat	1	DZ	409
	181-53225-301	CATAPULT ASSEMBLY, Pilots ejection seat	1	DY	
		ATTACHING PARTS			
-1	NAF312508-3	---*--- BOLT, Trunnion (GFP)	4		
-2	AN394-29	. PIN	2		
	2W18-416M	. WASHER, Flat (NA) (89372)	2		
-3	AN393-19	. PIN	3		
	2W18-10M	. WASHER, Flat (NA) (89372)	3		
-4	181-53282	. LEVER, Pilots ejection seat catapult release	1		
	209-53189	. YOKE ASSEMBLY, Headrest pilots ejection seat	1		444
		ATTACHING PARTS			
-5	AN393-9	. PIN	2		
-6	2W18-10L	---*--- . WASHER, Flat (NA) (89372)	2		
-7	AN320-3	. . NUT	1		
-8	2W18-10M	. . WASHER, Flat (NA) (89372)	2		
-9	AN23-12	. . BOLT	1		
-10	4B21S3-5	. . BUSHING, Spacer (NA) (89372)	1		
-11	209-53189-3	. . HALF YOKE, Headrest pilots ejection seat yoke assembly	2		444
-12	NAF602200-1	. CATAPULT, Personnel ejection (GFP)	1	DZ	409
-13	NAF400309-1	. . MECHANISM, Firing (GFP)	1	DZ	409
-14	NAF312508-2	. . PIN, Safety (GFP)	1	DZ	409
	NAF312516-1	. . RING, Compression inner tube (GFP)	3		
-15	NAF312508-1	. . RING, Trunnion locking (GFP)	2		
-16	NAF602200-9	. CATAPULT, Personnel ejection (GFP)	1	DY	
-17	AMEL582-1	. . MECHANISM, Firing (GFP)	1	DY	
-18	NAF312508-2	. . PIN, Safety (GFP)	1	DY	
	NAF312516-1	. . RING, Compression inner tube (GFP)	3		
-19	No Number	CARTRIDGE (MK-1 - MOD-0) (GFP)	1		
-20	2W18-10	WASHER, Flat (NA) (89372)	1		
-21	AN393-31	PIN	1		

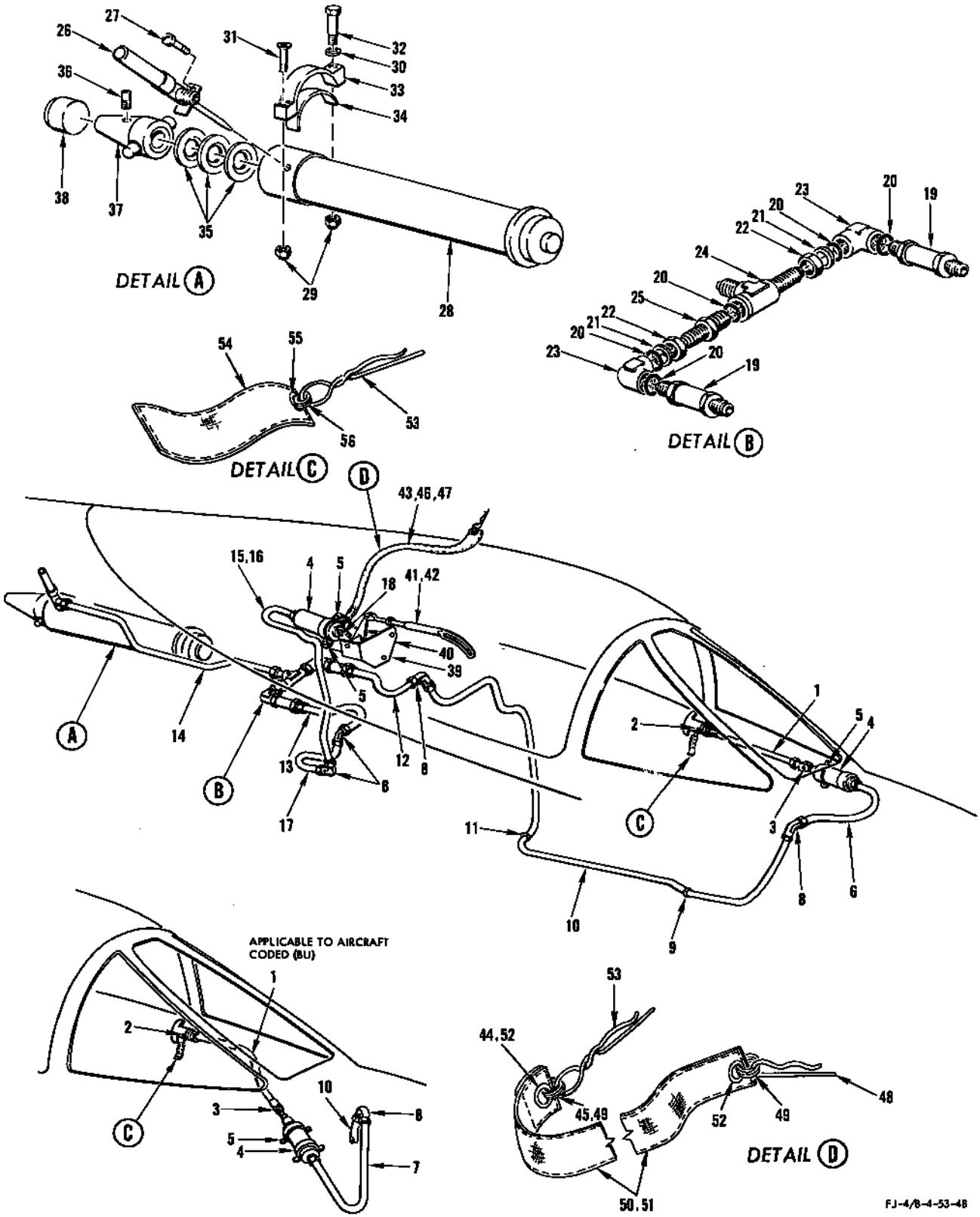

FIGURE 83 - CANOPY EMERGENCY JETTISON SYSTEM

CANOPY EMERGENCY JETTISON SYSTEM

FIGURE & INDEX NO.	PART NUMBER	1 2 3 4 5 6 7 NOMENCLATURE	UNITS PER ASSY.	USABLE ON CODE	S/C NO.
63-1	F9242-1	CABLE ASSEMBLY (ARN) (70436)	1		
	ATTACHING PARTS				
-2	AN509-8R9	SCREW	3		
	2W18-10M	WASHER, Flat (NA) (89372)	3		
	AN365-832	NUT	3		
-3	AN23-10	BOLT	1		
	2W18-10M	WASHER, Flat (NA) (89372)	1		
	AN320-3	NUT	1		
	---*---				
-4	BLX-32-1	INITIATOR, Type M-3 (FRAR) (00000) (GFP)	2		
-5	AN4-6A	BOLT	4		
	2W18-416	WASHER, Flat (NA) (89372)	8		
	AN365-428	NUT	4		
-6	181-318115-59	LINE ASSEMBLY, Cockpit enclosure canopy emergency system	1	BT	
-7	181-318115-69	LINE ASSEMBLY, Cockpit enclosure canopy emergency system	1	BU	
-8	AN833-4	ELBOW	4		
	2W18-716M	WASHER, Flat (NA) (89372)	8		
	AN316-7	NUT	4		
-9	AN931A8S13	GROMMET	1		
-10	MS28741-4-1062	HOSE ASSEMBLY	1		
-11	295246-16A	GROMMET (UC) (61864) (trim and form to fit)	1		
-12	181-318115-45	LINE ASSEMBLY, Cockpit enclosure canopy emergency system LH	1		
-13	181-318115-46	LINE ASSEMBLY, Cockpit enclosure canopy emergency system RH	1		
-14	181-318115-43	LINE ASSEMBLY, Cockpit enclosure canopy emergency system	1		
-15	181-318115-47	LINE ASSEMBLY, Cockpit enclosure canopy emergency system	1	U	
-16	181-318115-61	LINE ASSEMBLY, Cockpit enclosure canopy emergency system	1	V	
-17	181-318115-51	LINE ASSEMBLY, Cockpit enclosure canopy emergency system	1		
-18	AN23-9	BOLT	1		
	2W18-10M	WASHER, Flat (NA) (89372)	2		
	AN310-3	NUT	1		
-19	M200	VALVE ASSEMBLY, Check (Bobrick Mfg. Corp.) (89488)	2		
-20	AN6290-4	GASKET	5		
-21	AN6291-4	RING	2		
-22	AN6289-4	NUT	2		
-23	AN927-4	ELBOW	2		
-24	AN784-4	TEE	1		
-25	AN832-4	UNION	1		
-26	M1A1	EXACTOR (GFP)	1		
-27	AN500A10-5	SCREW	2		
-28	M1A1	CANOPY REMOVER (GFP)	1		
-29	2452-02	NUT, Barrel high tensile lightweight (EN) (72962)	2		
-30	2W18-10M	WASHER, Flat (NA) (89372)	1		
-31	AN509-10R21	SCREW	1		
-32	AN3-14A	BOLT	1		
-33	209-31872	FITTING, Cockpit enclosure canopy remover attaching	1		
-34	209-31801-3	FILLER, Canopy and mechanism installation cockpit enclosure	1		
-35	181-318101	SHIM, Cockpit enclosure canopy remover end	AR		
-36	AN565D10H6	SETSCREW	1		
-37	181-318100-3	FITTING, Cockpit enclosure canopy remover end	1		
-38	181-318102	PAD, Cockpit enclosure canopy remover shock	1		
-39	209-53292	SHELF ASSEMBLY, Canopy initiator firing switch (see figure 58 for breakdown)	1		
-40	209-53082	MECHANISM ASSEMBLY, Pilots seat ejection (Martin-Baker configuration) (see figure 59A for breakdown)	1		
	209-53083	MECHANISM ASSEMBLY, Pilots seat ejection (Martin-Baker configuration) (see figure 59A for breakdown)	1		
-41	209-53134	LINK ASSEMBLY, Pilots ejection seat canopy firing (superseded by 209-53134-11 for future procurement) (see figure 58 for breakdown)	1	RG	
-42	209-53134-11	LINK ASSEMBLY, Pilots ejection seat canopy firing (supersedes 209-53134 for future procurement) (see figure 58 for breakdown)	1	RF	
-43	12S2	STREAMER, Red warning (NA) (89372)	1	DN	444
-44	AN230B10	. GROMMET	1	DN	444
-45	5R10	RING, Chain retainer (NA) (89372)	1	DN	444
-46	209-53118	STREAMER ASSEMBLY, Primary canopy initiator and headrest trigger mechanism (superseded by 209-53118-11 for future procurement)	1	RH	
-47	209-53118-11	STREAMER ASSEMBLY, Primary canopy initiator and headrest trigger mechanism (supersedes 209-53118 for future procurement)	1	RJ	
-48	AN415-2	. LOCKPIN	1		
-49	5R10	. RING, Chain retainer (NA) (89372)	2		
-50	12S2	. STREAMER, Red warning (NA) (89372)	1	RH	
-51	12S2	. STREAMER, Red warning (NA) (89372)	2	RJ	
-52	AN230B10	. . GROMMET	1	RJ	
-53	ALX-32-12	PIN (FRAR) (00000) (GFP) (furnished with BLX-32-1 type M-3 initiator (FRAR) (00000) (GFP)	2		
-54	12S2	STREAMER, Red warning (NA) (89372)	1		
-55	AN230B10	. GROMMET	1		
-56	5R10	RING, Chain retainer (NA) (89372)	1		

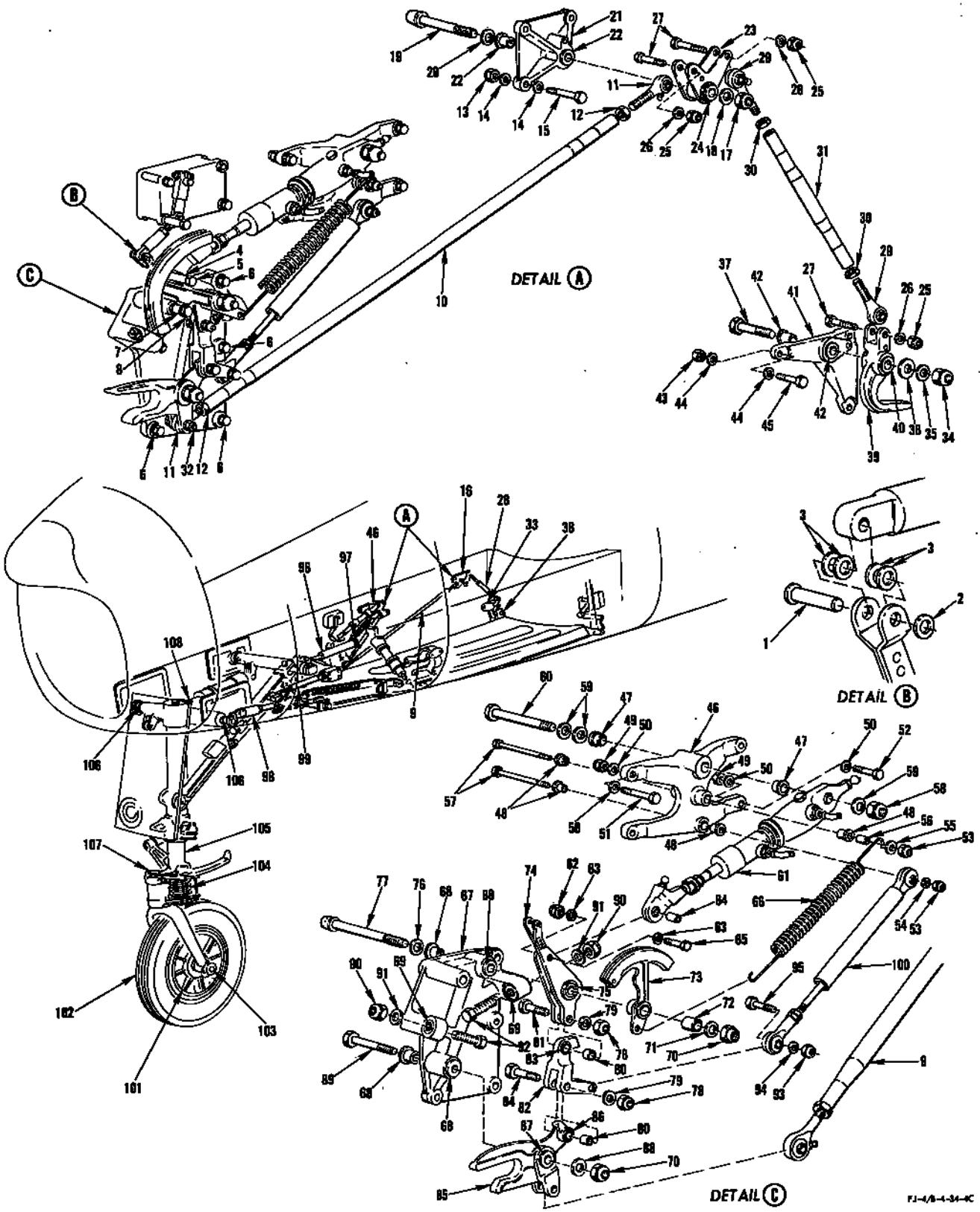

FIGURE 64 - UPLOCK AND OPERATING MECHANISM

UPLOCK AND OPERATING MECHANISM

FIGURE & INDEX NO.	PART NUMBER	1 2 3 4 5 6 7 NOMENCLATURE	UNITS PER ASSY.	USABLE ON CODE	S/C NO.
64-1	AN393-15	PIN	1		
-2	2W18-10L	WASHER, Flat (NA) (89372)	1		
-3	2W1AL13-14-040	WASHER, Plain (NA) (89372)	4		
-4	4B21S4-022	BUSHING, Spacer (NA) (89372)	1		
-5	AN4-10A	BOLT	1		
	2W18-416	WASHER, Flat (NA) (89372)	1		
-6	AN4-10A	BOLT	4		
	2W18-416	WASHER, Flat (NA) (89372)	8		
	AN365-428	NUT	4		
-7	4B21S4-020	BUSHING, Spacer (NA) (89372)	1		
-8	AN4-30A	BOLT	1		
	2W18-416	WASHER, Flat (NA) (89372)	2		
	AN365-428	NUT	1		
-9	181-34576-3	ROD ASSEMBLY, Nose landing gear wheel door lock actuating	1		
-10	181-34576-11	. ROD SUBASSEMBLY, Nose landing gear wheel door lock actuating	1		
-11	HMX-4G	. ROD END, Unibal spherical bearing (HEC) (73134)	2		
-12	AN316-5R	. NUT	2		
-13	AN365-428	NUT	3		
-14	2W18-416	WASHER, Flat (NA) (89372)	6		
-15	AN4-10A	BOLT	3		
-16	181-34579	SUPPORT ASSEMBLY, Nose landing gear wheel door lock rod actuating	1		
-17	AN364-624	. NUT	1		
-18	2W1-24-32-64	. WASHER, Plain (NA) (89372)	1		
19	NAS146-41	. BOLT	1		
-20	2W10-6	. WASHER, Countersunk (NA) (89372)	1		
-21	181-34578	. FITTING ASSEMBLY, Nose landing gear wheel door lock rod actuating	1		
-22	4B20M-S6-014	. . BUSHING, Press fit flanged (NA) (89372)	2		
-23	181-34577	. BELLCRANK ASSEMBLY, Nose landing gear wheel door lock rod actuating	1		
-24	AR6-1	. . BEARING (TOR) (60380)	1		
	181-34577-7	. . BELLCRANK SUBASSEMBLY, Nose landing gear wheel door lock rod actuating (magnetic inspected)	1		
-25	AN365-428	NUT	3		
-26	2W18-416	WASHER, Flat (NA) (89372)	3		
-27	AN4-10A	BOLT	3		
-28	181-34576-1	ROD ASSEMBLY, Nose landing gear wheel door lock actuating	1		
-29	HMX-4G	. ROD END, Unibal spherical bearing (HEC) (73134)	2		
-30	AN316-5R	. NUT	2		
-31	181-34576-9	. ROD SUBASSEMBLY, Nose landing gear wheel door lock rod actuating	1		
-32	AN4-10A	BOLT	1		
	2W18-416	WASHER, Flat (NA) (89372)	1		
	AN365-428	NUT	1		
-33	181-34581	UPLOCK ASSEMBLY, Nose landing gear wheel door support aft	1		
-34	AN365-624	. NUT	1		
-35	AN960D616	. WASHER	1		
-36	2W1-24-32-64	. WASHER, Plain (NA) (89372)	1		
-37	AN6-21A	. BOLT	1		
-38	181-34583-5	. HOOK ASSEMBLY, Nose landing gear wheel door lock aft	1		
-39	181-34583-3	. . HOOK, Nose landing gear wheel door lock aft hook assembly	1		
-40	AT-6	. . BEARING (TOR) (60380)	1		
-41	181-34582	. FITTING ASSEMBLY, Nose landing gear wheel door hook support aft	1		
-42	4B20S6-011	. . BUSHING, Press fit flanged (NA) (89372)	2		
-43	AN365-428	NUT	3		
-44	2W18-416	WASHER, Flat (NA) (89372)	6		
-45	AN4-7A	BOLT	3		
-46	181-34571	SUPPORT ASSEMBLY, Nose landing gear wheel door lock cyclinder	1		
-47	4B20M-S6-012	. BUSHING, Press fit flanged (NA) (89372)	2		
-48	4B20M-S3-011	. BUSHING, Press fit flanged (NA) (89372)	4		
-49	AN365-428	NUT	4		
-50	2W18-416	WASHER, Flat (NA) (89372)	8		
-51	AN4-7A	BOLT (upper)	2		
-52	AN4-10A	BOLT (lower)	2		
-53	AN365-1032	NUT	2		
-54	2W18-10	WASHER, Flat (NA) (89372)	1		
-55	2W1AL13-18-64	WASHER, Plain (NA) (89372)	1		
-56	4B21S3-006	BUSHING, Spacer (NA) (89372)	1		
-57	AN3-16A	BOLT	2		
-58	AN365-624	NUT	1		
-59	2W18-616	WASHER, Flat (NA) (89372)	3		
-60	AN6-20A	BOLT	1		
-61	194-58639	HYDRAULIC EQUIPMENT ASSEMBLY, Nose landing gear fairing door uplock cylinder (see Hydraulic System)	1		
-62	AN365-428	NUT	1		
-63	2W18-416	WASHER, Flat (NA) (89372)	2		
-64	4B21S4-022	BUSHING, Spacer (NA) (89372)	1		
-65	AN4-16A	BOLT	1		
-66	194-34566	SPRING, Tension	1		
	181-34561-11	UPLOCK ASSEMBLY, Nose landing gear wheel door forward support	1	Y	
	181-34561-101	UPLOCK ASSEMBLY, Nose landing gear wheel door forward support	1	Z	
-67	181-34562	. FITTING ASSEMBLY, Nose landing gear wheel door forward hook support	1		
-68	4B20M-S6-016	. . BUSHING, Press fit flanged (NA) (89372)	4		
-69	181-34565	. . BUSHING, Nose landing gear wheel door lock stop	2		
-70	AN365-624	. NUT	2		

UPLOCK AND OPERATING MECHANISM

FIGURE & INDEX NO.	PART NUMBER	1 2 3 4 5 6 7 NOMENCLATURE	UNITS PER ASSY.	USABLE ON CODE	S/C NO.
64-71	2W18-616	. WASHER, Flat (NA) (89372)	1		
-72	4B21S6-020	. BUSHING, Spacer (NA) (89372)	1	Y	
	4B21S6-018	. BUSHING, Spacer (NA) (89372)	1	Z	
-73	181-34537-3	. SECTOR, Nose landing gear wheel door lock emergency release	1	Y	
	181-34537-11	. SECTOR, Nose landing gear wheel door lock emergency release	1	Z	
-74	181-34567	. ARM ASSEMBLY, Nose landing gear wheel door lock forward	1	Y	
	181-34567-101	. ARM ASSEMBLY, Nose landing gear wheel door lock forward	1	Z	
-75	6NBC914YZP	. . BEARING, Aircraft needle (TOR) (60380)	1		
-76	2W10-6	. WASHER, Countersunk (NA) (89372)	1		
-77	NAS146-50	. BOLT	1	Y	
	NAS146-49	. BOLT	1	Z	
-78	AN365-1032	. NUT	2		
-79	2W18-10	. WASHER, Flat (NA) (89372)	2		
-80	4B21S3-011	. BUSHING, Spacer (NA) (89372)	2		
-81	AN3-6A	. BOLT	1		
-82	181-34568	. LINK ASSEMBLY, Nose landing gear wheel door lock forward	1		
	181-34568-3	. . LINK, Nose landing gear wheel door lock forward link assembly	1		
-83	4B19B5-008	. . BUSHING, Press fit plain (NA) (89372)	1		
-84	AN3-10A	. BOLT	1		
-85	181-34563-5	. HOOK ASSEMBLY, Nose landing gear wheel door lock forward	1		
	181-34563-3	. . HOOK, Nose landing gear wheel door lock forward hook assembly	1		
-86	4B19B5-010	. . BUSHING, Press fit plain (NA) (89372)	1		
-87	AT-6	. . BEARING, Aircraft needle (TOR) (60380)	1		
-88	2W1-24-32-64	. WASHER, Plain (NA) (89372)	1		
-89	AN5-23A	. BOLT	1		
-90	AN315-4R	. NUT	2		
-91	2W18-416	. WASHER, Flat (NA) (89372)	2		
-92	5B2-12	. BOLT, Adjustment (NA) (89372)	2		
-93	AN365-1032	NUT	1		
-94	2W18-10	WASHER, Flat (NA) (89372)	1		
-95	AN3-10A	BOLT	1		
-96	181-34520	BUNGEE ASSEMBLY, Nose landing gear uplock hook (see figure 67 for breakdown) (see figure 65 for forward attaching parts)	1		
-97	AN4-10A	BOLT (aft attaching)	1		
	2W18-416	WASHER, Flat (NA) (89372) (aft attaching)	4		
	2W18-416L	WASHER, Flat (NA) (89372) (aft attaching)	2		
	AN365-428	NUT (aft attaching)	1		
-98	181-34550	BUNGEE ASSEMBLY, Nose landing gear dump valve (see figure 67 for breakdown)	1	Y	
-99	209-34535	BUNGEE ASSEMBLY, Nose landing gear emergency selector valve control (see figure 67 for breakdown)	1	Z	
-100	157-33324	BUNGEE ASSEMBLY, Nose landing gear wheel door toggle lock (see figure 67 for breakdown)	1		
	209-34101	CHASSIS ASSEMBLY, Nose landing gear	1		
-101	9530936	. WHEEL ASSEMBLY, 20 x 4.4 EHP type VII (GY) (73842) (for breakdown see Technical Manual 4W-1-44)	1		
-102	COMM	. TIRE, 20 x 4.4 EHP type VII 10 PR tube type (GY) (73842)	1		
	COMM	. TUBE, 20 x 4.4 EHP type VII fabric base stem configuration TR67B (GY) (73842)	1		
-103	532569	. NUT, Nose landing gear axle (MSO) (39661) (for breakdown see Technical Manual NAVAER 03-25EF-502)	1		
	532567	. AXLE, Nose landing gear (MSO) (39661) (for breakdown see Technical Manual NAVAER 03-25EF-502)	1		
	532568	. BEARING SPACER, Nose landing gear (MSO) (39661) (for breakdown see Technical Manual NAVAER 03-25EF-502)	1		
-104	A-17397	. CENTERING DEVICE UNIT ASSEMBLY, Shimmy damper (HD) (74480) (for breakdown see Technical Manual AN 03-30-26)	1		
	ATTACHING PARTS				
	AN364-524	. NUT	4		
	2W18-516	. WASHER, Flat (NA) (89372)	8		
	NAS464-5A12	. BOLT (upper)	2		
	NAS464-5A10	. BOLT (lower)	2		
	---*---				
-105	557600-501	. STRUT ASSEMBLY, Nose landing gear lock (MSO) (39661)(for breakdown see Technical Manual NA 03-25EF-502)	1		
-106	2W1C72-48-10	. WASHER, Plain (NA) (89372) (RH only)	AR		
	2W1C72-48-32	. WASHER, Plain (NA) (89372) (RH only)	AR		
	2W1C88-54-10	. WASHER, Plain (NA) (89372) (LH only)	AR		
	2W1C88-54-32	. WASHER, Plain (NA) (89372) (LH only)	AR		
-107	AN310-7	. NUT	1		
	2W1LB129-88-10	. WASHER, Plain (NA) (89372)	AR		
	2W1-129-88-20	. WASHER, Plain (NA) (89372)	AR		
	2W1-129-88-32	. WASHER, Plain (NA) (89372)	AR		
	2W1-129-88-45	. WASHER, Plain (NA) (89372)	AR		
-108	209-34102	. ADAPTER, Nose landing gear high pressure air valve	1		
	47A1562	. PACKING (alternate part AN6287-1 may be used)	2		

DRAG BRACE ASSEMBLY

FIGURE & INDEX NO.	PART NUMBER	1 2 3 4 5 6 7 NOMENCLATURE	UNITS PER ASSY.	USABLE ON CODE	S/C NO.
66	181-34501-20	BRACE ASSEMBLY, Nose landing gear drag	1		
	181-34502-5	. LINK ASSEMBLY, Nose landing gear drag brace lower	1		
-1	120-33144	. . BEARING ASSEMBLY, Main landing gear side brace outboard pivot	1		
-2	AN507-1032R6	. . SCREW	2		
-3	181-34506	. . RETAINER	1		
-4	AN944-101	. . FITTING, Lubricator	1		
-5	181-34502-3	. . LINK, Nose landing gear drag brace lower link assembly	1		
-6	179-34522	. STOP, Nose landing gear downlock drag brace	1		
-7	S-1452-054	. NUT, Barrel (EN) (72962)	1		
-8	2W1C20-24-32	. WASHER, Plain (NA) (89372)	AR		
-9	2W1C20-24-10	. WASHER, Plain (NA) (89372)	AR		
-10	2W1C20-24-16	. WASHER, Plain (NA) (89372)	AR		
-11	179-34504	. PIN, Nose landing gear drag brace center	1		
-12	2W1-41-38-20	. WASHER, Plain (NA) (89372)	AR		
-13	2W1-41-38-42	. WASHER, Plain (NA) (89372)	AR		
-14	2W1-41-38-63	. WASHER, Plain (NA) (89372)	AR		
-15	2W18-1216	. WASHER, Flat (NA) (89372)	1		
-16	AN320-10	. NUT	1		
-17	181-34505	. LINK ASSEMBLY, Nose landing gear drag brace upper (for breakdown see Technical Manual NAVAER 03-25GBD-532)	1		
-18	181-34515-10	. PIN, Nose landing gear drag brace upper attachment	1		
-19	2W1-29-40-63	. WASHER, Plain (NA) (89372)	1		
-20	AN7H5A	. BOLT	1		
	181-34516-5	. HOOK ASSEMBLY, Nose landing gear uplock	1		
-21	181-34516-3	. . HOOK, Nose landing gear uplock hook assembly	1		
-22	NAS428H5-11	. . BOLT	1		
-23	AN316-5R	. . NUT	1		
-24	6NCC1312YP	. . BEARING (TOR) (60380)	1		
-25	AN5-14A	. . BOLT	1		
-26	2W17-516	. . WASHER, Corrosion-resistant steel (NA) (89372)	2		
-27	4B21B5-021	. . BUSHING, Spacer (NA) (89372)	1		
-28	4B21S7-020	. . BUSHING, Spacer (NA) (89372)	1		
-29	AN365-524	. . NUT	1		
-30	AN3-14A	. . BOLT	1		
-31	NAS43C3-64	. . SPACER	1		
-32	2W18-10	. . WASHER, Flat (NA) (89372)	1		
-33	AN365-1032	. . NUT	1		
-34	NAS464-4-12	. BOLT	1		
-35	2W18-416	. WASHER, Flat (NA) (89372)	2		
-36	2W18-416L	. WASHER, Flat (NA) (89372)	2		
-37	AN320-4	. NUT	1		
-38	NAS464-4A20	. BOLT	1		
-39	2W1C16-22-63	. WASHER, Plain (NA) (89372)	2		
-40	181-54837	. ARM, Nose landing gear uplock indicator switch actuator	1		
-41	2W1C24-24-32	. WASHER, Plain (NA) (89372)	3		
-42	AN364-428	. NUT	1		
-43	181-34507	. CLEVIS, Nose landing gear down and uplock hydraulic cylinder	2		
-44	4B21M-S4-014	. BUSHING, Spacer (NA) (89372)	1		
-45	4B21M-S4-011	. BUSHING, Spacer (NA) (89372)	1		
-46	181-34511-5	. BEAM ASSEMBLY, Nose landing gear drag brace trunnion	1		
	181-34511-3	. . BEAM, Nose landing gear drag brace trunnion beam assembly	1		
	181-34528	. . PLATE, Nose landing gear drag brace attaching beam grease	1		
-47	AN944-101	. . FITTING, Lubricator	1		
-48	AN944-301	. . FITTING, Lubricator	1		
-49	AN6-20A	. BOLT	1		
-50	2W18-616	. WASHER, Flat (NA) (89372)	1		
-51	AN365-624	. NUT	2		
-52	AN365-428	. NUT	1		
-53	2W18-416	. WASHER, Flat (NA) (89372)	1		
-54	AN4-21A	. BOLT	1		
-55	AN364-428	. NUT	1		
-56	2W18-416	. WASHER, Flat (NA) (89372)	1		
-57	AN24-34A	. BOLT	1		
-58	181-34513	. PIN, Nose landing gear drag brace trunnion left	1		
-59	2W1C88-54-63	. WASHER, Plain (NA) (89372)	1		
-60	2W1C88-54-32	. WASHER, Plain (NA) (89372)	5		
-61	2W1C88-54-16	. WASHER, Plain (NA) (89372)	2		
-62	181-34512	. PIN, Nose landing gear drag brace trunnion right	1		
-63	2W1C72-48-63	. WASHER, Plain (NA) (89372)	1		
-64	2W1C72-48-32	. WASHER, Plain (NA) (89372)	5		
-65	2W1C72-48-16	. WASHER, Plain (NA) (89372)	2		
-66	AN815-4D	. UNION	2		
	AN6290-4	. GASKET	2		
-67	181-54830	. SWITCH ASSEMBLY, Nose landing gear downlock indicator (see Landing Gear Sequencing System for breakdown)	1		

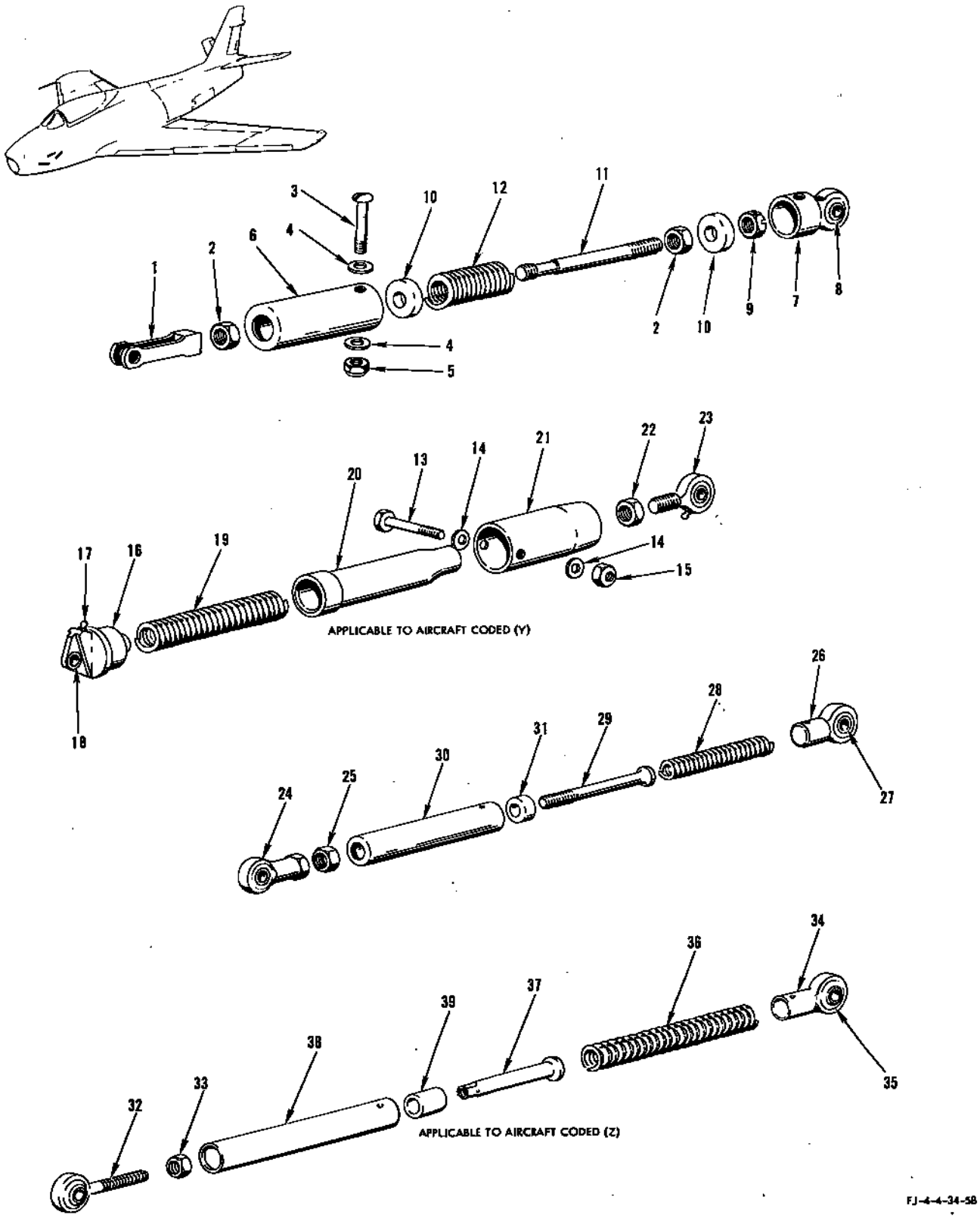

FIGURE 67 - BUNGEE ASSEMBLIES

HOOK

FIGURE & INDEX NO.	PART NUMBER	1 2 3 4 5 6 7 NOMENCLATURE	UNITS PER ASSY.	USABLE ON CODE	S/C NO.
69-1	AN320-14	NUT (tighten finger-tight)	1		
-2	2W18-1416	WASHER, Flat (NA) (89372)	1		
-3	209-56408	BOLT ASSEMBLY, Catapult hook trunnion	1		
-4	MS15001-1	. FITTING, Lubrication	1		
-5	AN365-428	NUT	1		
-6	2W18-416	WASHER, Flat (NA) (89372)	2		
-7	AN4-25A	BOLT	1		
-8	NAS43-4-39	SPACER	2		
-9	52-048-250-1.375	ROLLPIN (EN) (72962)	1		
-10	209-56401-3	FITTING, Catapult hook	1		
	209-56402	BUNGEE ASSEMBLY, Catapult hook	1		
-11	F44-14	. ROD END (HEC) (73134)	1		
-12	AN316-4R	. NUT	1		
-13	209-56403	. CYLINDER, Catapult hook bungee	1		
-14	209-56405	. CAP ASSEMBLY, Catapult hook bungee	1		
-15	LSS4	. . BEARING (HEC) (73134)	1		
-16	209-56404	. PISTON, Catapult hook bungee	1		
-17	209-56402-3	. SPRING, Catapult hook bungee assembly	1		
-18	NAS143-4C	. WASHER	1		
-19	209-31402	FITTING ASSEMBLY, Fuselage station 116.125 to station 187.5 catapult	1		
	ATTACHING PARTS				
-20	MS29513-112	PACKING	4		
-21	209-48213	BUSHING, Forward fuselage fuel cell "A" frame	4		
-22	2W17-816	WASHER, Corrosion-resistant steel (NA) (89372)	4		
-23	AN8-21A	BOLT	4		
	---*---				
-24	AN365-428	. NUT	1		
-25	2W18-416M	. WASHER, Flat (NA) (89372)	2		
-26	AN4-24A	. BOLT	1		
-27	209-314102-1	. RUB PAD, Catapult hook LH	1		
-28	209-314102-2	. RUB PAD, Catapult hook RH	1		
-29	1191-8CNx-3/4	. INSERT, Heli-coil (AF) (91767)	4		
-30	209-314104	FAIRING ASSEMBLY, Fuselage station 116.125 catapult hook (trim upon installation if necessary)	1	ET	
-31	AN509-10R10	SCREW	2	ET	
	22A5-02	NUT, Anchor (EN) (72962)	2	ET	
-32	209-31531-13	FITTING, Fuselage station 131 catapult hook and wing support (209-31531-13 together with 209-48213 supersede 209-31531-3 for future procurement)	1		

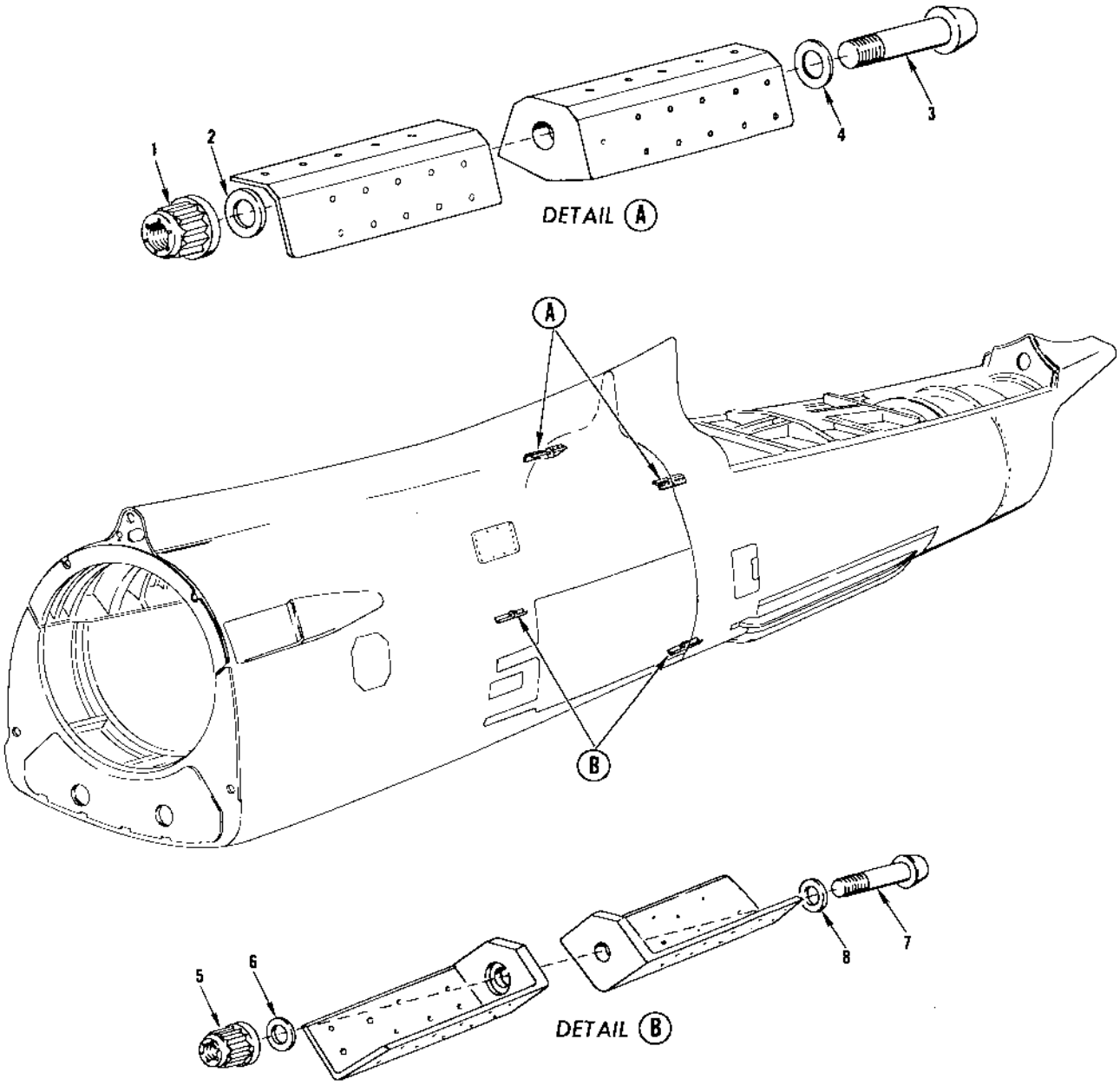

FJ-4/B-4-31-5

FIGURE 70 - ATTACHING PARTS (FUS STA 331.5)

FIGURE & INDEX NO.	PART NUMBER	1 2 3 4 5 6 7 NOMENCLATURE	UNITS PER ASSY.	USABLE ON CODE
70-1	EB-126	NUT (EN)	2	
-2	NAS143-12	WASHER	2	
-3	MS20012-12	BOLT	2	
-4	NAS143-12C	WASHER	2	
-5	EB-064	NUT (EN)	2	
-6	NAS143-6	WASHER	2	
-7	MS20006-12	BOLT	2	
-8	NAS143-6C	WASHER	2	

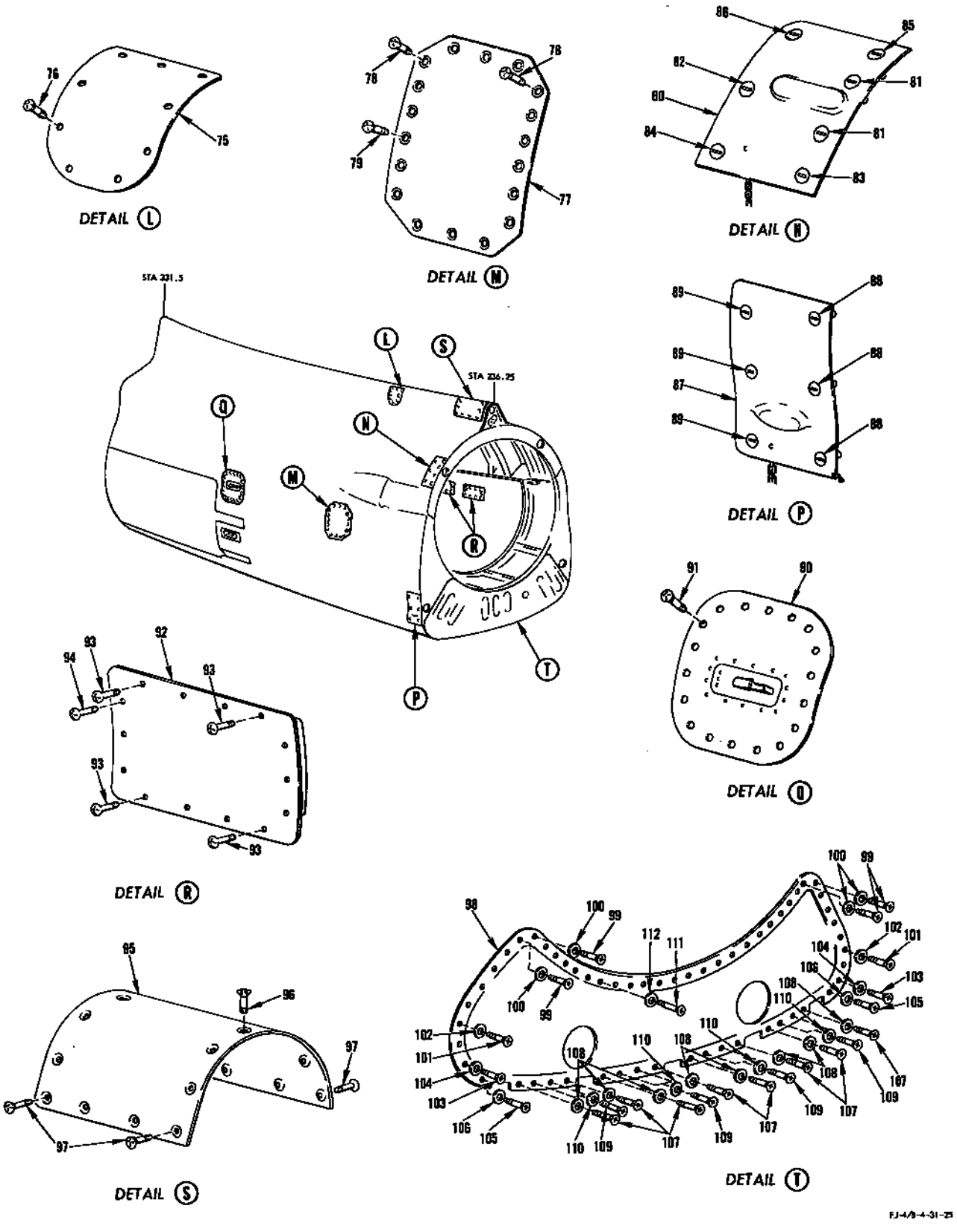

FIGURE 71 - ACCESS DOORS, INSPECTION DOORS AND PANELS (FUS STA 236.25 TO 331.5) (Sheet 2)

ACCESS DOORS, INSPECTION DOORS AND PANELS (FUS STA 236.25 TO 331.5)

FIGURE & INDEX NO.	PART NUMBER	1 2 3 4 5 6 7 NOMENCLATURE	UNITS PER ASSY.	USABLE ON CODE	S/C NO.
71	140-52425	. SPRING, Compression (used on 209-316237 only)	1		
-32	181-71629-11	COVER, AN/ARA-25 radio antenna fuselage station 304.5 to station 323.125	1	ET	
-33	AN507-1032R8	SCREW	2	ET	
	22NA5-02	NUT, Anchor (EN) (72962)	2	ET	
-34	AN507-1032R8	SCREW	5	ET	
	3600-2-02BC100	NUT, Anchor (NUS) (80539)	5	ET	
-35	AN507-1032R8	SCREW	22	ET	
	3600-2-02	NUT, Anchor (NUS) (80539)	22	ET	
-36	181-56371-11	FAIRING ASSEMBLY, Arresting gear trunnion LH	1	ET	
	181-56371-21	FAIRING ASSEMBLY, Arresting gear trunnion LH	1	FR	
	181-56371-2	FAIRING ASSEMBLY, Arresting gear trunnion RH	1	ET	
	181-56371-22	FAIRING ASSEMBLY, Arresting gear trunnion RH	1	FR	
-37	181-56372	. FITTING ASSEMBLY, Arresting gear trunnion door link attaching	1		
-38	4B20S7-024	. . BUSHING, Press fit flanged (NA) (89372)	2		
-39	AN944-101	. . FITTING, Lubricator	1		
-40	AN509-10R12	. SCREW	1		
	2W18-10L	. WASHER, Flat (NA) (89372)	1		
	AN365-1032	. NUT	1		
-41	AN749-3-3	. JUMPER	1		
-42	AN509-10R11	. SCREW	3		
	2W18-10L	. WASHER, Flat (NA) (89372)	3		
	AN365-1032	. NUT	3		
-43	181-56374	. HINGE ASSEMBLY, Arresting gear trunnion door	1		
-44	AN253-2-968	. . PIN	1		
-45	AN365-524	. NUT	1		
-46	2W18-516	. WASHER, Flat (NA) (89372)	1		
-47	4B21S5-129	. BUSHING, Spacer (NA) (89372)	1		
-48	AN44-23A	. BOLT	1		
	209-56311	. SHIM, Arresting gear trunnion door linkage	AR		
-49	AN509-10R10	SCREW	1		
	2W18-8	WASHER, Flat (NA) (89372)	1		
	AN365-832	NUT	1		
-50	AN509-10R11	SCREW	1		
	2W1AL12-14-62	WASHER, Plain (NA) (89372)	2		
	AN365-832	NUT	1		
-51	AN509-10R9	SCREW	4		
	2W18-8	WASHER, Flat (NA) (89372)	4		
	AN365-832	NUT	4		
-52	181-56351-1	DOOR ASSEMBLY, Arresting gear tube fairing fixed LH	1		
	181-56351-2	DOOR ASSEMBLY, Arresting gear tube fairing fixed RH	1		
-53	181-56352-1	BRACKET ASSEMBLY, Arresting gear hook fixed door attaching forward LH	1		
	181-56352-2	BRACKET ASSEMBLY, Arresting gear hook fixed door attaching forward RH	1		
-54	181-56359	CLIP, Arresting gear hook fixed door attaching	1		
-55	AN320-4	NUT	1		
-56	2W2B17-16-62	WASHER, Thrust (NA) (89372)	2		
-57	2W1B17-16-20	WASHER, Plain (NA) (89372)	8		
-58	AN24-31	BOLT	1		
-59	AN364-1032	NUT (LH only)	3		
	AN365-1032	NUT (RH only)	3		
-60	2W18-10L	WASHER, Flat (NA) (89372)	3		
-61	2W18-10	WASHER, Flat (NA) (89372)	15		
-62	AN509-10-23	SCREW	3		
-63	320-0.625-2.312SH	CLAMP (MAR) (98625)	2		
-64	181-56353	BRACKET, Arresting gear hook fixed door attaching aft	1		
-65	181-56356	FITTING, Arresting gear hook fixed door aft attaching	1		
-66	AN365-1032	NUT	2		
-67	2W18-10	WASHER, Flat (NA) (89372)	4		
-68	4B21S3-020	BUSHING, Spacer (NA) (89372)	2		
-69	AN3-11A	BOLT	2		
-70	AN364-1032	NUT	2		
-71	2W18-10	WASHER, Flat (NA) (89372)	8		
-72	2W18-10L	WASHER, Flat (NA) (89372)	10		
-73	AN509-10-23	SCREW	2		
-74	320-0.625-2.375S	CLAMP (MAR) (98625)	2		
-75	209-31688-49	COVER, Fuselage station 236.25 to station 331.5 dorsal tunnel fin assembly	1		
	9C1-1-3	. CHAIN, Bead (NA) (89372)	1		
-76	AN507-832R6	SCREW	9		
	22A38-82	NUT, Anchor (EN) (72962)	9		
-77	209-31080-1	DOOR, Fuselage station 260.125 to station 268.5 aft fuel cell probe access LH	1		
	209-31080-2	DOOR, Fuselage station 260.125 to station 268.5 aft fuel cell probe access RH	1		
-78	AN509-10R7	SCREW	2		
	22A17-02	NUT, Anchor (EN) (72962)	2		
-79	AN509-10R7	SCREW	16		
	3600-2-02	NUT, Anchor (NUS) (80539)	16		
-80	209-31078-1	DOOR ASSEMBLY, Fus sta 236.25 to sta 240 upper longeron disconnect LH	1		
	209-31078-2	DOOR ASSEMBLY, Fus sta 236.25 to sta 240 upper longeron disconnect RH	1		
	2W18-3	. WASHER, Flat (NA) (89372)	1		
	9C1-2-3	. CHAIN, Safety (NA) (89372)	1		
-81	93265-1-.120	STUD (UC) (61864)	2		
-82	93265-1-.140	STUD (UC) (61864)	1		
-83	98265-2-.160	STUD (UC) (61864)	1		
-84	98265-2-.250	STUD (UC) (61864)	1		
-85	98265-3-.290	STUD (UC) (61864)	1		
-86	98265-3-.310	STUD (UC) (61864)	1		

ACCESS DOORS, INSPECTION DOORS AND PANELS (FUS STA 236.25 TO 331.5)

FIGURE & INDEX NO.	PART NUMBER	1 2 3 4 5 6 7 NOMENCLATURE	UNITS PER ASSY.	USABLE ON CODE	S/C NO.
71	99836	PIN (UC) (61864)	7		
	99833-P-.130	RECEPTACLE (UC) (61864)	7		
-87	209-31079-1	DOOR ASSEMBLY, Fuselage station 236.25 to station 240 lower longeron disconnect LH	1		
	209-31079-2	DOOR ASSEMBLY, Fuselage station 236.25 to station 240 lower longeron disconnect RH	1		
	9C1-2-3	. CHAIN, Safety (NA) (89372)	1		
	2W18-3	. WASHER, Flat (NA) (89372)	1		
-88	98265-1-.120	STUD (UC) (61864)	3		
-89	98265-2-.200	STUD (UC) (61864)	3		
	99836	PIN (UC) (61864)	6		
	99833-P-.130	RECEPTACLE (UC) (61864)	6		
-90	181-31081-51	DOOR ASSEMBLY, Fuselage station 286.5 to station 298 arresting hook snubber access	1		
	H-5000-040-081	. LATCH (HWL) (83014)	1		
	9C1-2-5	. CHAIN, Safety (NA) (89372)	1		
	AN960D3	. WASHER	2		
	181-56226	. PLATE, Arresting gear snubber instruction door	1		
-91	AN509-10R10	SCREW	22		
	AN373F1032	NUT PLATE	22		
-92	209-31089	DOOR ASSEMBLY, Fuselage station 262.563 engine shroud access	4		
-93	NAS221-8	SCREW	4		
	22A17-02	NUT, Anchor (EN) (72962)	4		
-94	NAS221-8	SCREW	10		
	AN366F1032	NUT PLATE	10		
-95	209-31688-7	COVER, Fuselage station 236.25 to station 331.5 dorsal tunnel fin assembly	1		
-96	AN507-832R8	SCREW	14		
	3600-2-02	NUT, Anchor (NUS) (80539)	14		
-97	AN507-832R8	SCREW	4		
	22A217-22-82	NUT, Anchor (EN) (72962)	4		
-98	209-31077	DOOR ASSEMBLY, Fuselage station 236.25 aft fuel cell removal	1	Y	
	209-31077-101	DOOR ASSEMBLY, Fuselage station 236.25 aft fuel cell removal	1	Z	
-99	NAS221-10	SCREW	4		
-100	2W18-10M	WASHER, Flat (NA) (89372)	4		
	3610-02	NUT, Anchor (NUS) (80539)	4		
-101	NAS221-11	SCREW	2		
-102	2W18-10M	WASHER, Flat (NA) (89372)	2		
	3600-2-02	NUT, Anchor (NUS) (80539)	2		
-103	NAS221-11	SCREW	2		
-104	2W18-10M	WASHER, Flat (NA) (89372)	2		
	3610-02	NUT, Anchor (NUS) (80539)	2		
-105	NAS221-11	SCREW	2		
-106	2W18-10M	WASHER, Flat (NA) (89372)	2		
	22A35-02	NUT, Anchor (EN) (72962)	2		
-107	NAS221-10	SCREW	8		
-108	2W18-10M	WASHER, Flat (NA) (89372)	8		
	3610-02	NUT, Anchor (NUS) (80539)	8		
-109	NAS221-10	SCREW	8		
-110	2W18-10M	WASHER, Flat (NA) (89372)	8		
	3600-2-02	NUT, Anchor (NUS) (80539)	8		
-111	NAS221-10	SCREW	31		
-112	2W18-10M	WASHER, Flat (NA) (89372)	31		
	3600-2-02	NUT, Anchor (NUS) (80539)	31		

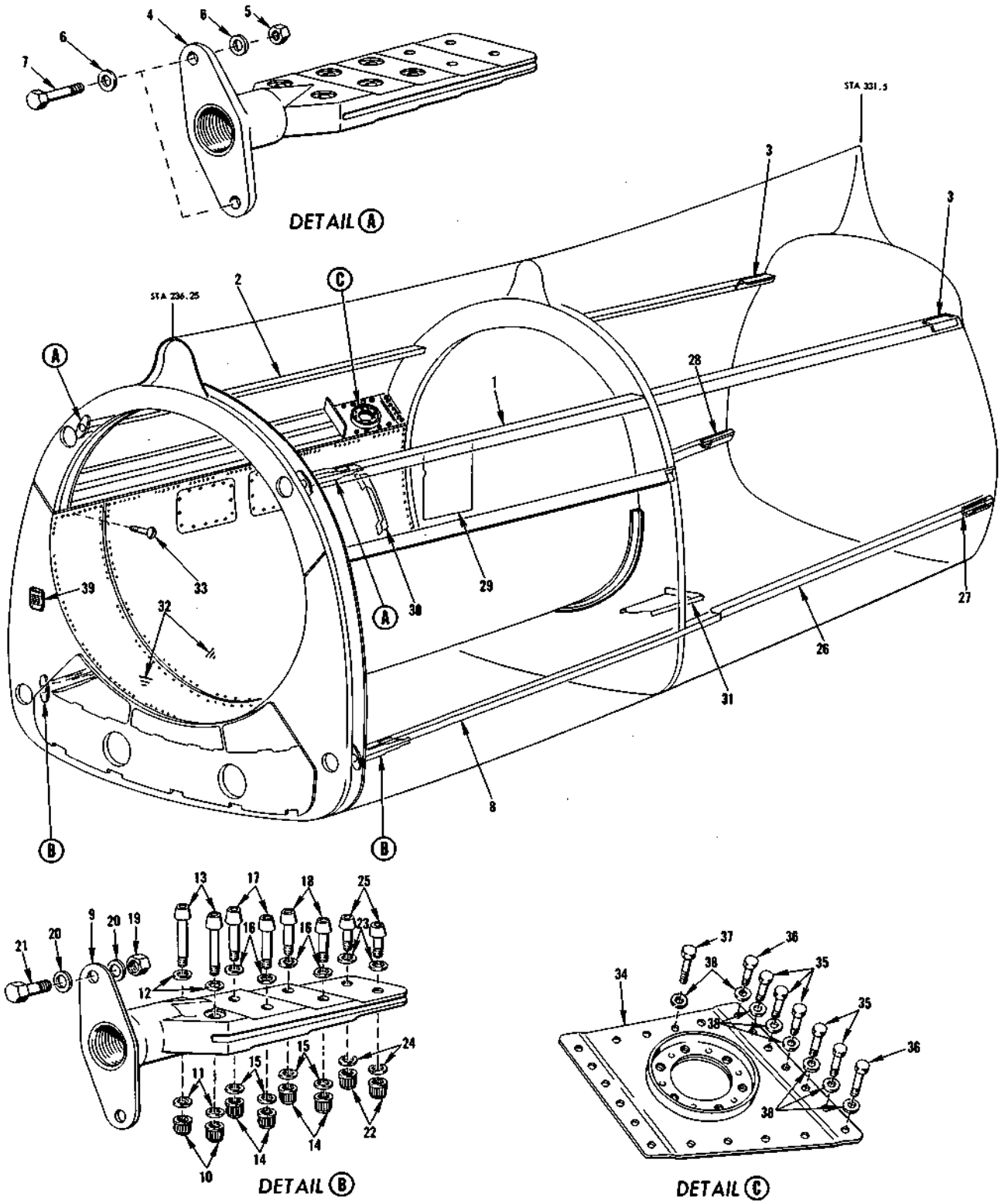

FJ-48-4-31-3C

FIGURE 72 - FRAME ASSEMBLY (FUS STA 236.25 TO 331.5)

FRAME ASSEMBLY (FUS STA 236.25 TO 331.5)

FIGURE & INDEX NO.	PART NUMBER	1 2 3 4 5 6 7 NOMENCLATURE	UNITS PER ASSY.	USABLE ON CODE	S/C NO.
72-1	209-31617-1	LONGERON ASSEMBLY, Fuselage station 240 to station 331.5 upper LH	1		
-2	209-31617-2	LONGERON ASSEMBLY, Fuselage station 240 to station 331.5 upper RH	1	AS	
	209-31617-12	LONGERON ASSEMBLY, Fuselage station 240 to station 331.5 upper RH	1	AR	
-3	209-31672-3	. FITTING, Fuselage station 331.5 upper longeron forward LH	1		
	209-31672-4	. FITTING, Fuselage station 331.5 upper longeron forward RH	1		
-4	209-31670-3	. FITTING, Fuselage station 236.25 upper longeron aft LH	1		
	209-31670-4	. FITTING, Fuselage station 236.25 upper longeron aft RH	1		
-5	AN365-428	NUT	2		
-6	2W18-416	WASHER, Flat (NA) (89372)	4		
-7	AN4-6A	BOLT	2		
-8	209-31618-1	LONGERON ASSEMBLY, Fuselage station 236.25 to station 286.5 lower LH	1		
	209-31618-2	LONGERON ASSEMBLY, Fuselage station 236.25 to station 286.5 lower RH	1		
-9	209-31671-3	. FITTING, Fuselage station 236.25 lower longeron aft LH	1		
	209-31671-4	. FITTING, Fuselage station 236.25 lower longeron aft RH	1		
-10	EB-064	. NUT (EN) (72962)	2		
-11	MS20002-6	. WASHER	2		
-12	MS20002C6	. WASHER	2		
-13	MS20006-15	. BOLT	2		
-14	EB-054	. NUT (EN) (72962)	4		
-15	MS20002-5	. WASHER	4		
-16	MS20002C5	. WASHER	4		
-17	MS20005-15	. BOLT	2		
-18	MS20005-11	. BOLT	2		
-19	AN365-428	NUT	2		
-20	2W18-416	WASHER, Flat (NA) (89372)	4		
-21	AN4-6A	BOLT	2		
-22	EB-054	NUT (EN) (72962)	2		
-23	NAS143-5C	WASHER	2		
-24	NAS143-5	WASHER	2		
-25	MS20005-8	BOLT	2		
-26	209-31619-1	LONGERON ASSEMBLY, Fuselage station 286.5 to station 331.5 lower LH	1		
	209-31619-2	LONGERON ASSEMBLY, Fuselage station 286.5 to station 331.5 lower RH	1		
-27	181-31673-5	. FITTING, Fuselage station 331.5 lower longeron forward LH (supersedes 181-31673-3 for future procurement)	1		
-28	181-31673-6	. FITTING, Fuselage station 331.5 lower longeron forward RH (supersedes 181-31673-4 for future procurement)	1		
-29	209-31682	SHIELD, Arresting hook snubber (RH only)	1		
	ATTACHING PARTS				
	AN520-10R7	SCREW	3		
	---*---				
-30	209-31747-1	FITTING, Fuselage station 251.5 frame splice upper side LH	1		
	209-31747-2	FITTING, Fuselage station 251.5 frame splice upper side RH	1		
-31	209-31772	SHROUD ASSEMBLY, Fuselage station 286.5 to station 298 lower deck (LH only)	1		
-32	209-31763	SHROUD ASSEMBLY, Fuselage station 236.5 to station 286.5 engine	1		
-33	AN509-10R10	. SCREW	12		
	2W18-10M	. WASHER, Flat (NA) (89372)	12		
	AN365-1032	. NUT	12		
-34	209-31082-2	DOOR ASSEMBLY, Fuselage station 277.25 to station 286.5 fuel shelf access RH	1		
	209-31082-1	DOOR ASSEMBLY, Fuselage station 277.25 to station 286.5 fuel shelf access LH	1		
	ATTACHING PARTS				
-35	AN3-3A	BOLT	5		
	3600-02	NUT, Anchor (NUS) (80539)	5		
-36	AN3-4A	BOLT	2		
	22A217-22-02	NUT, Anchor (EN) (72962)	2		
-37	AN3-4A	BOLT	14		
	3600-02	NUT, Anchor (NUS) (80539)	14		
-38	2W18-10	WASHER, Flat (NA) (89372)	21		
	---*---				
-39	5P48	PLATE, Navy identification and modification (NA) (89372)	1		

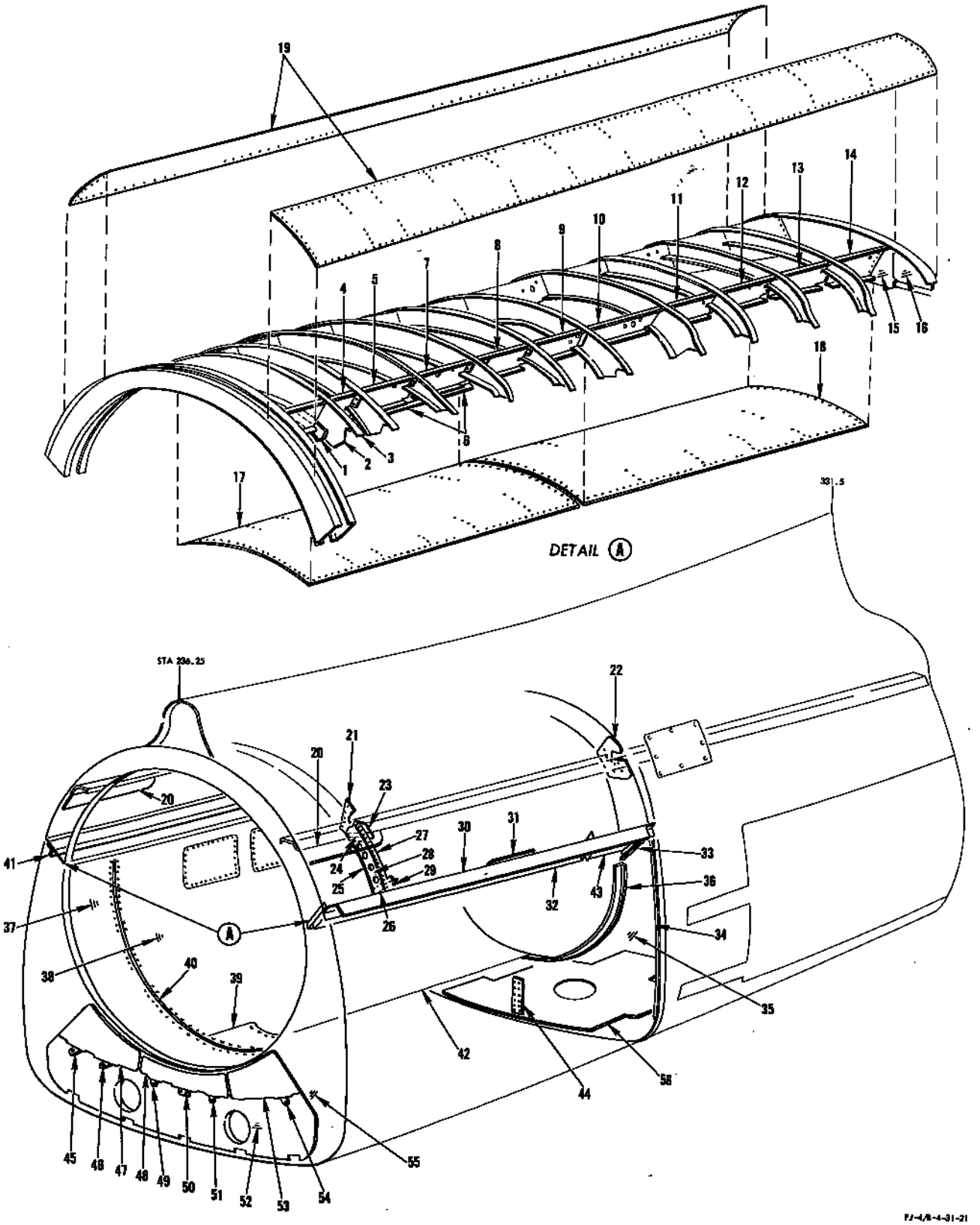

FIGURE 73 - FRAME ASSEMBLY TITANIUM COMPONENTS (FUS STA 236.25 TO 331.5)

ACCESS DOORS, INSPECTION DOORS, PANELS, ASPIRATOR AND VORTEX GENERATORS (FUS STA 331.5 TO 429)

FIGURE & INDEX NO.	PART NUMBER	1 2 3 4 5 6 7 NOMENCLATURE	UNITS PER ASSY.	USABLE ON CODE	S/C NO.
74-1	209-317198	DOOR, Fuselage station 331.5 to station 343.25 dorsal fin LH	1	DN	446
	209-31716-6	DOOR, Fuselage station 331.5 to station 343.25 dorsal fin assembly LH	1	DP	
	209-31716-5	DOOR, Fuselage station 331.5 to station 343.25 dorsal fin assembly RH	1		
	9C1-2-5	. CHAIN, Safety (NA) (89372)	1		
-2	7S15-10-8	SCREW, 100° flush head close tolerance (NA) (89372)	5	DN	
	AN509-10R8	SCREW (used on 209-31716-6 only)	5	DP	
	AN509-10R8	SCREW (used on 209-31716-5 only)	5		
	22NA35-02BC	NUT, Anchor (EN) (72962)	5	DN	
	22A35-02	NUT, Anchor (EN) (72962) (used on 209-31716-6 only)	5	DP	
	22A35-02	NUT, Anchor (EN) (72962) (used on 209-31716-5 only)	5		
-3	7S15-10-8	SCREW, 100° flush head close tolerance (NA) (89372)	10	DN	
	AN509-10R8	SCREW (used on 209-31716-6 only)	10	DP	
	AN509-10R8	SCREW (used on 209-31716-5 only)	10		
	22A38-02BC	NUT, Anchor (EN) (72962)	10	DN	
	22A38-02	NUT, Anchor (EN) (72962) (used on 209-31716-6 only)	10	DP	
	22A38-02	NUT, Anchor (EN) (72962) (used on 209-31716-5 only)	10		
-4	7S15-10-7	SCREW, 100° flush head close tolerance (NA) (89372)	2	DN	
	AN509-10R8	SCREW (used on 209-31716-6 only)	2	DP	
	AN509-10R8	SCREW (used on 209-31716-5 only)	2		
	22NA38-02	NUT, Anchor (EN) (72962)	2	DN	
	22A35-02	NUT, Anchor (EN) (72962) (used on 209-31716-6 only)	2	DP	
	22A35-02	NUT, Anchor (EN) (72962) (used on 209-31716-5 only)	2		
-5	7S15-10-7	SCREW, 100° flush head close tolerance (NA) (89372)	1	DN	
	AN509-10R8	SCREW (used on 209-31716-6 only)	1	DP	
	AN509-10R8	SCREW (used on 209-31716-5 only)	1		
	22NA24-02BC	NUT, Anchor (EN) (72962)	1	DN	
	22A35-02	NUT, Anchor (EN) (72962) (used on 209-31716-6 only)	1	DP	
	22A35-02	NUT, Anchor (EN) (72962) (used on 209-31716-5 only)	1		
-6	AN509-10R8	SCREW (used on 209-31716-6 only)	1	DP	
	AN509-10R8	SCREW (used on 209-31716-5 only)	1		
	22A35-02	NUT, Anchor (EN) (72962) (used on 209-31716-6 only)	1	DP	
	22A35-02	NUT, Anchor (EN) (72962) (used on 209-31716-5 only)	1		
-7	7S15-10-8	SCREW, 100° flush head close tolerance (NA) (89372)	1	DN	
	AN509-10R9	SCREW (used on 209-31716-5 only)	1		
	2620-02	NUT, Anchor (NUS) (80539)	1	DN	
	22A217-22-02BC100	NUT, Anchor (EN) (72962) (used on 209-31716-5 only)	1		
-8	209-31741	ASPIRATOR ASSEMBLY, Fuselage tail cone	1	ET	
	209-31741-101	ASPIRATOR ASSEMBLY, Fuselage tail cone	1	FR	
-9	209-31741-25	. COVER, Fuselage tail cone aspirator assembly	1		
-10	AN520-10R7	. SCREW	4		
	3600-2-02BC100	. NUT, Anchor (NUS) (80539)	4		
-11	3600-2-02BC100	. NUT, Anchor (NUS) (80539)	22		
-12	3600-2-02	. NUT, Anchor (NUS) (80539)	2		
-13	AN509-10R7	SCREW	39		
	2W1AL13-20-63	WASHER, Plain (NA) (89372)	39		
	AN363C1032	NUT	39		
-14	190-31622-1	VANE, Fuselage aft vortex generator LH (LH side)	1		
	190-31622-2	VANE, Fuselage aft vortex generator RH (RH side)	1		
-15	190-31622-2	VANE, Fuselage aft vortex generator RH (LH side)	4		
	190-31622-1	VANE, Fuselage aft vortex generator LH (RH side)	4		
-16	209-317136	DOOR, Fuselage station 331.5 to station 338.75 RH access	1	FK	
-17	AN509-10R10	SCREW	22	FK	
	3600-02	NUT, Anchor (NUS) (80539)	22	FK	
-18	181-56301	DOOR ASSEMBLY, Arresting gear aft (see figure 75 for breakdown)	1	ET	
-19	209-39005	SPEED BRAKE AFT ASSEMBLY, Fuselage station 337.125 to station 380.125 (see figures 79 and 80 for breakdown)	1	FR	
-20	209-31003-1	DOOR, Fuselage station 379.25 to station 384.5 speed brake mechanism access LH	1	FR	
	209-31003-2	DOOR, Fuselage station 379.25 to station 384.5 speed brake mechanism access RH	1	FR	
-21	AN509-10R10	SCREW	11	HZ	
	3600-02	NUT, Anchor (NUS) (80539)	10	HZ	
	2620-02	NUT, Anchor (NUS) (80539)	1	HZ	
	AN509-10R10	SCREW	10	KL	
	3600-02	NUT, Anchor (NUS) (80539)	10	KL	
-22	AN509-10R11	SCREW	2	FR	
	3600-02	NUT, Anchor (NUS) (80539)	2	FR	
-23	209-31090	DOOR ASSEMBLY, Fuselage station 386.125 to station 392.375 tail bumper access	1		
	9C1-3-5	. CHAIN, Safety (NA) (89372)	1		
-24	AN509-10R8	SCREW	4		
	2710-02	NUT, Anchor (NUS) (80539)	4		
-25	AN509-10R8	SCREW	4		
	3700-2-02	NUT, Anchor (NUS) (80539)	4		
-26	209-31075	DOOR ASSEMBLY, Fuselage station 338.75 to station 346.015 fire extinguisher (LH only)	1		
-27	209-31075-15	. DOOR SUBASSEMBLY, Fuselage station 338.75 to station 346.015 fire extinguisher	1		
-28	209-31085	. . HINGE ASSEMBLY, Fuselage station 338.75 to station 346.015 fire door	1		
	AN253-2-4875	. . . PIN	1		
	175-53091-3	. . . SPRING, 4th crewman's harness door hinge	2		
-29	209-31084-1	. HINGE, Fuselage station 338.75 to station 346.015 fire door (lower)	1		

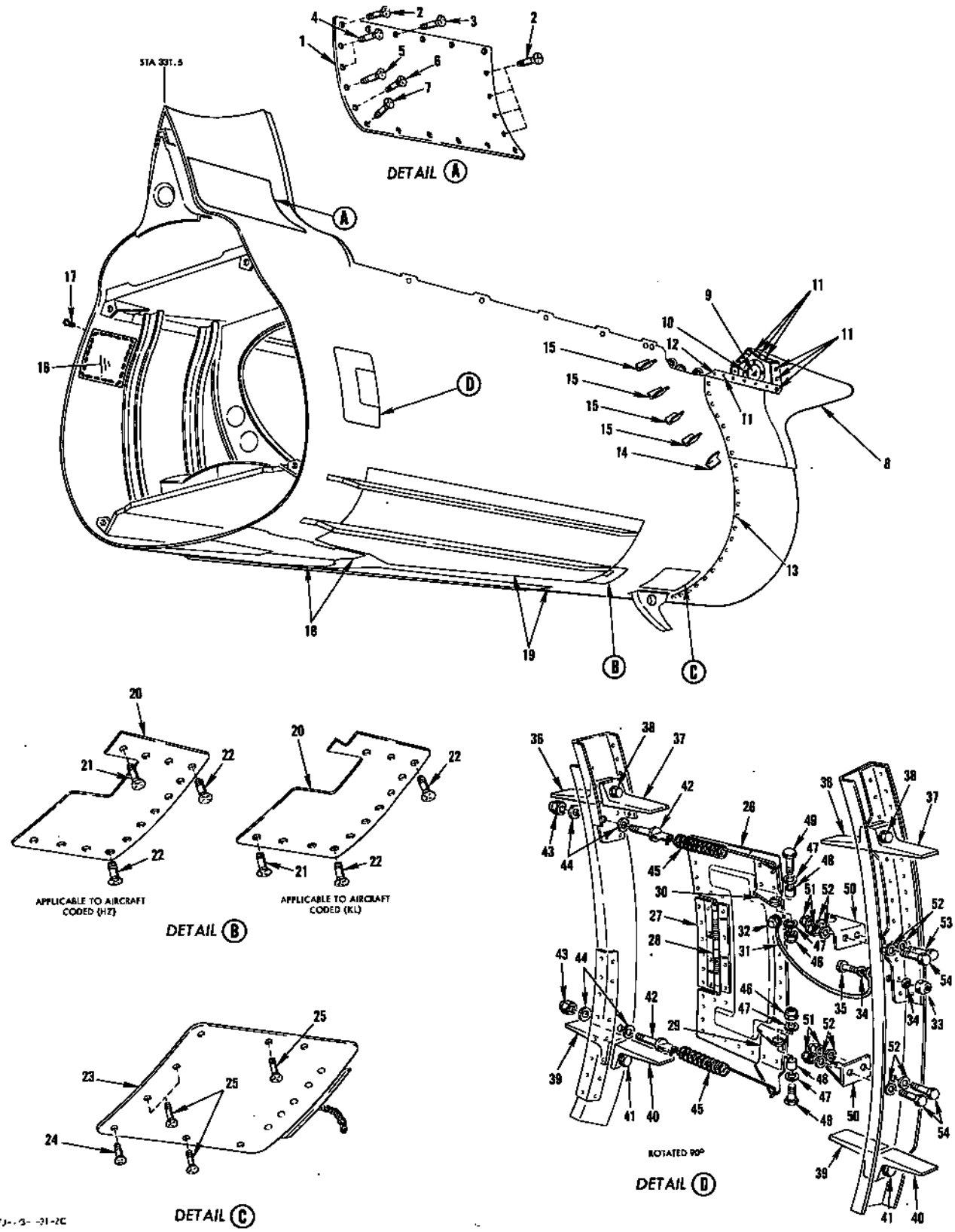

FIGURE 74 - ACCESS DOORS, INSPECTION DOORS, PANELS, ASPIRATOR AND VORTEX GENERATOR (FUS STA 331.5 TO 429)

ACCESS DOORS, INSPECTION DOORS, PANELS, ASPIRATOR AND VORTEX GENERATORS (FUS STA 331.5 TO 429)

FIGURE & INDEX NO.	PART NUMBER	1 2 3 4 5 6 7 NOMENCLATURE	UNITS PER ASSY.	USABLE ON CODE	S/C NO.
74-30	209-31084-2	. HINGE, Fuselage station 338.75 to station 346.015 fire door (upper)	1		
-31	AN749-3-4	. JUMPER	1		
-32	AN507-832-8	. SCREW	1		
	2W18-8	. WASHER, Flat (NA) (89372)	1		
	AN363-832	. NUT	1		
-33	AN363-832	NUT	1		
-34	2W18-8	WASHER, Flat (NA) (89372)	2		
-35	AN515-8-7	SCREW	1		
-36	209-31705	ANGLE, Fuselage station 338.75 and station 346.015 upper side bolting aft	2		
-37	200-316174	ANGLE, Fuselage station 338.75 and station 346.015 upper side bolting forward	2		
-38	AN5-12A	BOLT	2		
	2W18-516	WASHER, Flat (NA) (89372)	4		
	AN365-524	NUT	2		
-39	209-31707	ANGLE, Fuselage station 338.75 and station 346.015 lower side bolting aft	2		
-40	209-316175	ANGLE, Fuselage station 338.75 and station 346.015 lower side bolting forward	2		
-41	AN5-11A	BOLT	2		
	2W18-516M	WASHER, Flat (NA) (89372)	4		
	AN365-524	NUT	2		
-42	AN42-5	BOLT	2		
-43	AN365-1032	NUT	2		
-44	2W18-10	WASHER, Flat (NA) (89372)	4		
-45	209-31083	SPRING, Tension	2		
-46	AN365-1032	NUT	2		
-47	2W18-10M	WASHER, Flat (NA) (89372)	4		
-48	NAS43-3-10	SPACER	2		
-49	AN3-6A	BOLT	2		
-50	209-31076	HINGE, Fuselage station 338.75 fire door	2		
-51	AN365-1032	NUT	4		
-52	2W18-10	WASHER, Flat (NA) (89372)	8		
-53	AN3-6A	BOLT	1		
-54	AN3-5A	BOLT	3		

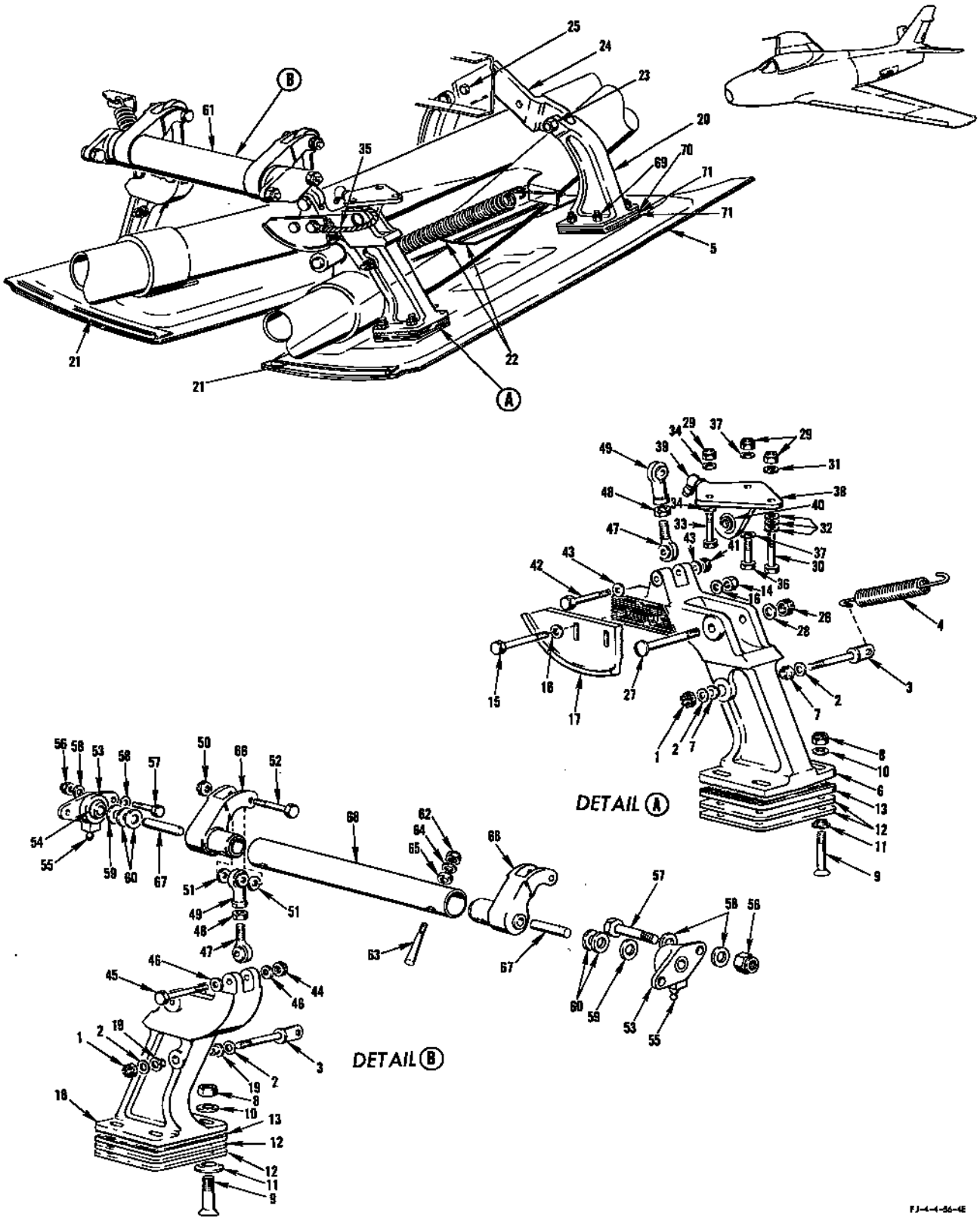

FIGURE 75 - ARRESTING GEAR AFT DOOR ASSEMBLY - APPLICABLE TO AIRCRAFT CODED (ET)

ARRESTING GEAR AFT DOOR ASSEMBLY - APPLICABLE TO AIRCRAFT CODED (ET)

FIGURE & INDEX NO.	PART NUMBER	1 2 3 4 5 6 7 NOMENCLATURE	UNITS PER ASSY.	USABLE ON CODE	S/C NO.
75-1	AN320-3	NUT	2		
-2	2W18-10	WASHER, Flat (NA) (89372)	4		
-3	AN42-13	BOLT	2		
-4	179-56327	SPRING, Tension	1		
-5	181-56301-301	DOOR ASSEMBLY, Arresting gear aft LH (supersedes 181-56301-201 for future procurement)	1		
	181-56301-302	DOOR ASSEMBLY, Arresting gear aft RH (supersedes 181-56301-102 for future procurement)	1		
-6	194-56311-11	. ARM ASSEMBLY, Arresting gear aft door forward (LH only)	1		
-7	4B20M-S3-012	. . BUSHING, Press fit flanged (NA) (89372)	2		
-8	AN365-1032	. NUT	8		
-9	AN509-10R27	. SCREW	8		
-10	2W18-10	. WASHER, Flat (NA) (89372)	8		
-11	A3235-SS-020	. WASHER, 100° countersunk (TIN) (78553)	8		
-12	181-56314-3	. SHIM, Arresting gear aft door	AR		
	181-56314-5	. SHIM, Arresting gear aft door	AR		
-13	181-56313	. PLATE, Arresting gear aft door adjusting	2		
-14	AN365-1032	. NUT (LH only)	2		
-15	AN3-13A	. BOLT (LH only)	2		
-16	2W18-10	. WASHER, Flat (NA) (89372) (LH only)	4		
-17	181-56303-3	. CAM, Arresting gear aft door closing LH only)	1		
-18	181-56310	. ARM ASSEMBLY, Arresting gear aft door forward RH	1		
-19	4B20S3-12	. . BUSHING, Press fit flanged (NA) (89372)	2		
-20	181-56312-1	. ARM, Arresting gear aft door aft LH	1		
	181-56312-2	. ARM, Arresting gear aft door aft RH	1		
	181-56301-43	. DOOR SUBASSEMBLY, Arresting gear door aft LH	1		
	181-56301-44	. DOOR SUBASSEMBLY, Arresting gear door aft RH	1		
-21	181-56301-19	. . WEATHERSEAL, Arresting gear aft door assembly	1		
-22	181-56301-13	. . WEATHERSEAL, Arresting gear aft door assembly LH	1		
-23	AN320-4	NUT	1		
	2W18-416	WASHER, Flat (NA) (89372)	1		
	AN24-18	BOLT	1		
-24	194-56316-11	FITTING ASSEMBLY, Arresting gear aft door aft hinge	1		
	MS15001-1	. FITTING, Lubrication	2		
	HSBG-4A	. BEARING (HLF) (97613)	2		
-25	AN3-5A	BOLT	3		
	2W18-10	WASHER, Flat (NA) (89372)	6		
	AN365-1032	NUT	3		
-26	AN320-4	NUT	1		
-27	AN24-24	BOLT	1		
-28	2W18-416	WASHER, Flat (NA) (89372)	1		
-29	AN365-1032	NUT	3		
-30	AN3-10A	BOLT	1		
-31	2W18-10	WASHER, Flat (NA) (89372)	1		
-32	2W18-10	WASHER, Flat (NA) (89372)	AR		
-33	AN3-6A	BOLT (LH only) (used on jumper)	1		
-34	2W18-10	WASHER, Flat (NA) (89372)	2		
-35	AN749-3-5	JUMPER	1		
-36	AN3-5A	BOLT	3		
-37	2W18-10	WASHER, Flat (NA) (89372)	2		
-38	194-56315-11	FITTING ASSEMBLY, Arresting gear aft door forward hinge	1		
-39	MS15001-4	. FITTING, Lubrication	1		
-40	HSBG-4A	. BEARING (HLF) (97613)	1		
-41	AN320-3	NUT	1		
-42	NAS464-3-17	BOLT (LH only)	1		
-43	2W18-10	WASHER, Flat (NA) (89372)	2		
-44	AN320-3	NUT	1		
-45	NAS464-3-14	BOLT (RH only)	1		
-46	2W18-10	WASHER, Flat (NA) (89372)	2		
-47	M34-14	ROD END (HEC) (73134)	2		
-48	AN316-4R	NUT	2		
-49	F34-14	ROD END (HEC) (73134)	2		
-50	AN320-3	NUT	2		
-51	2W18-10M	WASHER, Flat (NA) (89372)	4		
-52	NAS464-3-11	BOLT	2		
-53	181-56322	SUPPORT ASSEMBLY, Arresting gear aft door actuating shaft	2		
-54	HSBG-5A	. BEARING (HLF) (97613)	2		
-55	AN944-101	. FITTING, Lubricator	2		
-56	AN365-1032	NUT	4		
-57	AN3-5A	BOLT	4		
-58	2W18-10	WASHER, Flat (NA) (89372)	8		
-59	2W18-616	WASHER, Flat (NA) (89372)	2		
-60	2W18-616M	WASHER, Flat (NA) (89372)	AR		
-61	181-56320	SHAFT ASSEMBLY, Arresting gear aft door attaching	1		
-62	AN364-1032	. NUT	2		
-63	AN386-2-8A	. PIN	2		
-64	2W18-416	. WASHER, Flat (NA) (89372)	2		
-65	AN975-3	. WASHER	2		
-66	181-56321-1	. ARM, Arresting gear aft door actuating LH	1		
	181-56321-2	. ARM, Arresting gear aft door actuating RH	1		
-67	181-56320-5	. PIN, Arresting gear aft door actuating shaft assembly	2		
-68	181-56320-3	. TUBE, Arresting gear aft door actuating shaft assembly	1		
-69	AN365-1032	NUT	4		

ARRESTING GEAR AFT DOOR ASSEMBLY - APPLICABLE TO AIRCRAFT CODED (ET)

FIGURE & INDEX NO.	PART NUMBER	1 2 3 4 5 6 7 NOMENCLATURE	UNITS PER ASSY.	USABLE ON CODE	S/C NO.
75	AN509-10R27	SCREW	4		
	2W18-10	WASHER, Flat (NA) (89372) (use under nut)	4		
	A3235-SS-020	WASHER, 100° countersunk (TIN) (78553) (use under screw)	4		
-70	181-56313	PLATE, Arresting gear aft door adjusting	1		
-71	181-56314-3	SHIM, Arresting gear aft door	AR		
	181-56314-5	SHIM, Arresting gear aft door	AR		

FRAME ASSEMBLY (FUS STA 331.5 TO 399.781)

FIGURE & INDEX NO.	PART NUMBER		1 2 3 4 5 6 7 NOMENCLATURE	UNITS PER ASSY.	USABLE ON CODE	S/C NO.
76	209-31711	*1	FRAME ASSEMBLY, Fuselage station 331.5 to station 399.781	1	AS	
	209-31711-101	*1	FRAME ASSEMBLY, Fuselage station 331.5 to station 399.781	1	HR	
	209-31711-201	*1	FRAME ASSEMBLY, Fuselage station 331.5 to station 399.781	1	HS	
	209-31711-401		FRAME ASSEMBLY, Fuselage station 331.5 to station 399.781	1	FR	
	209-31712-1	*1	. PANEL ASSEMBLY, Fuselage station 331.5 to station 400.844 side LH	1	BE	
	209-31712-2	*1	. PANEL ASSEMBLY, Fuselage station 331.5 to station 400.844 side RH	1	AS	
	209-31712-101	*1	. PANEL ASSEMBLY, Fuselage station 331.5 to station 400.844 side LH	1	HR	
	209-31712-102	*1	. PANEL ASSEMBLY, Fuselage station 331.5 to station 400.844 side RH	1	HR	
	209-31712-202	*1	. PANEL ASSEMBLY, Fuselage station 331.5 to station 400.844 side RH	1	HS	
	209-31712-301	*1	. PANEL ASSEMBLY, Fuselage station 331.5 to station 400.844 side LH	1	FR	
	209-31712-302	*1	. PANEL ASSEMBLY, Fuselage station 331.5 to station 400.844 side RH	1	FR	
-1	209-31717-1		. . LONGERON ASSEMBLY, Fuselage station 331.5 to station 400.687 upper LH	1		
	209-31717-2		. . LONGERON ASSEMBLY, Fuselage station 331.5 to station 440.687 upper RH	1		
-2	209-31701-3		. . . FITTING, Fuselage station 331.5 upper longeron aft LH	1		
	209-31701-4		. . . FITTING, Fuselage station 331.5 upper longeron aft RH	1		
-3	209-31718-1		. . LONGERON ASSEMBLY, Fuselage station 331.5 to station 393.406 lower LH	1	ET	
	209-31718-2		. . LONGERON ASSEMBLY, Fuselage station 331.5 to station 393.406 lower RH	1	ET	
	209-31718-101		. . LONGERON ASSEMBLY, Fuselage station 331.5 to station 393.406 lower LH	1	FR	
	209-31718-102		. . LONGERON ASSEMBLY, Fuselage station 331.5 to station 393.406 lower RH	1	FR	
-4	209-31623-3		. . . FITTING, Fuselage station 331.5 lower longeron aft LH	1		
	209-31623-4		. . . FITTING, Fuselage station 331.5 lower longeron aft RH	1		
-5	209-31642-1		. . . ANGLE, Fuselage station 384.5 lower longeron to lower frame LH	1		
	209-31642-2		. . . ANGLE, Fuselage station 384.5 lower longeron to lower frame RH	1		
-6	209-31684-1		. . . ANGLE, Fuselage station 384.5 lower longeron to side frame attaching LH	1	ET	
	209-31684-2		. . . ANGLE, Fuselage station 384.5 lower longeron to side frame attaching RH	1	ET	
	209-317203-1		. . . ANGLE, Fuselage station 384.5 lower longeron to side frame attaching LH	1	FR	
	209-317203-2		. . . ANGLE, Fuselage station 384.5 lower longeron to side frame attaching RH	1	FR	
-7	AN363C428		. . . NUT	2		
-8	2W18-416		. . . WASHER, Flat (NA) (89372)	4		
-9	AN4-11A		. . . BOLT	2		
-10	209-317207-1		. . . SHIM, Fuselage station 384.5 lower longeron LH	1	FR	
	209-317207-2		. . . SHIM, Fuselage station 384.5 lower longeron RH	1	FR	
-11	209-316180-1		. . . TEE, Fuselage station 366.25 side frame to lower longeron attaching LH	1	ET	
	209-316180-2		. . . TEE, Fuselage station 366.25 side frame to lower longeron attaching RH	1	ET	
-12	209-316181-1		. . . ANGLE, Fuselage station 366.25 lower frame to lower longeron attaching LH	1	ET	
	209-316181-2		. . . ANGLE, Fuselage station 366.25 lower frame to lower longeron attaching RH	1	ET	
-13	AN363C428		. . . NUT	4	ET	
-14	2W18-416		. . . WASHER, Flat (NA) (89372)	8	ET	
-15	AN4-11A		. . . BOLT	4	ET	
	209-31708-1		. . FRAME ASSEMBLY, Fuselage station 350.93 canted side LH	1	BE	
	209-31708-2		. . FRAME ASSEMBLY, Fuselage station 350.93 canted side RH	1	BE	
	209-317134-1		. . FRAME ASSEMBLY, Fuselage canted station 350.93 side LH	1	HR	
	209-317134-51		. . FRAME ASSEMBLY, Fuselage canted station 350.93 side LH	1	FR	
	209-317134-2		. . FRAME ASSEMBLY, Fuselage canted station 350.93 side RH	1	BF	
-16	181-31706-5		. . . FITTING, Fuselage station 350.93 canted frame upper splice LH (superseded by 181-31706-11 for future procurement)	1	BE	
	181-31706-6		. . . FITTING, Fuselage station 350.93 canted frame upper splice RH (superseded by 181-31706-12 for future procurement)	1	BE	
	181-31706-11		. . . FITTING, Fuselage station 350.93 canted frame upper splice LH (supersedes 181-31706-5 for future procurement)	1	BE	
	181-31706-12		. . . FITTING, Fuselage station 350.93 canted frame upper splice RH (supersedes 181-31706-6 for future procurement)	1	BE	
	181-31706-21		. . . FITTING, Fuselage station 350.93 canted frame upper splice LH	1	BF	
	181-31706-22		. . . FITTING, Fuselage station 350.93 canted frame upper splice RH	1	BF	
-17	209-52764		. . CLOSEOUT ASSEMBLY, Speed brake aft fuselage station 338.75	1	FR	
	209-52764-9		. . . GLASS FABRIC, Speed brake aft fuselage station 338.75 closeout assembly	1	FR	
	AN515-8R7		. . . SCREW	6	FR	
	2W18-8		. . . WASHER, Flat (NA) (89372)	6	FR	509
	F5000-832		. . . NUT, Anchor (KNM) (75237)	6	FR	509
	209-31715	*1	. DECK ASSEMBLY, Fuselage station 331.5 to station 400.843 bottom	1	BE	
	209-31715-101	*1	. DECK ASSEMBLY, Fuselage station 331.5 to station 400.843 bottom	1	HR	
	209-317119	*1	. DECK ASSEMBLY, Fuselage station 331.5 to station 400.843 bottom	1	FR	
-18	181-31797		. . COVER ASSEMBLY, Fuselage station 331.5 to station 338.75 bottom shear web	1	ET	
-19	181-31797-5		. . . COVER, Fuselage station 331.5 to station 338.75 bottom shear web cover assembly	1	ET	
-20	AN507-832R8		. . . SCREW	12	ET	
-21	AN507-832R10		. . . SCREW	4	ET	

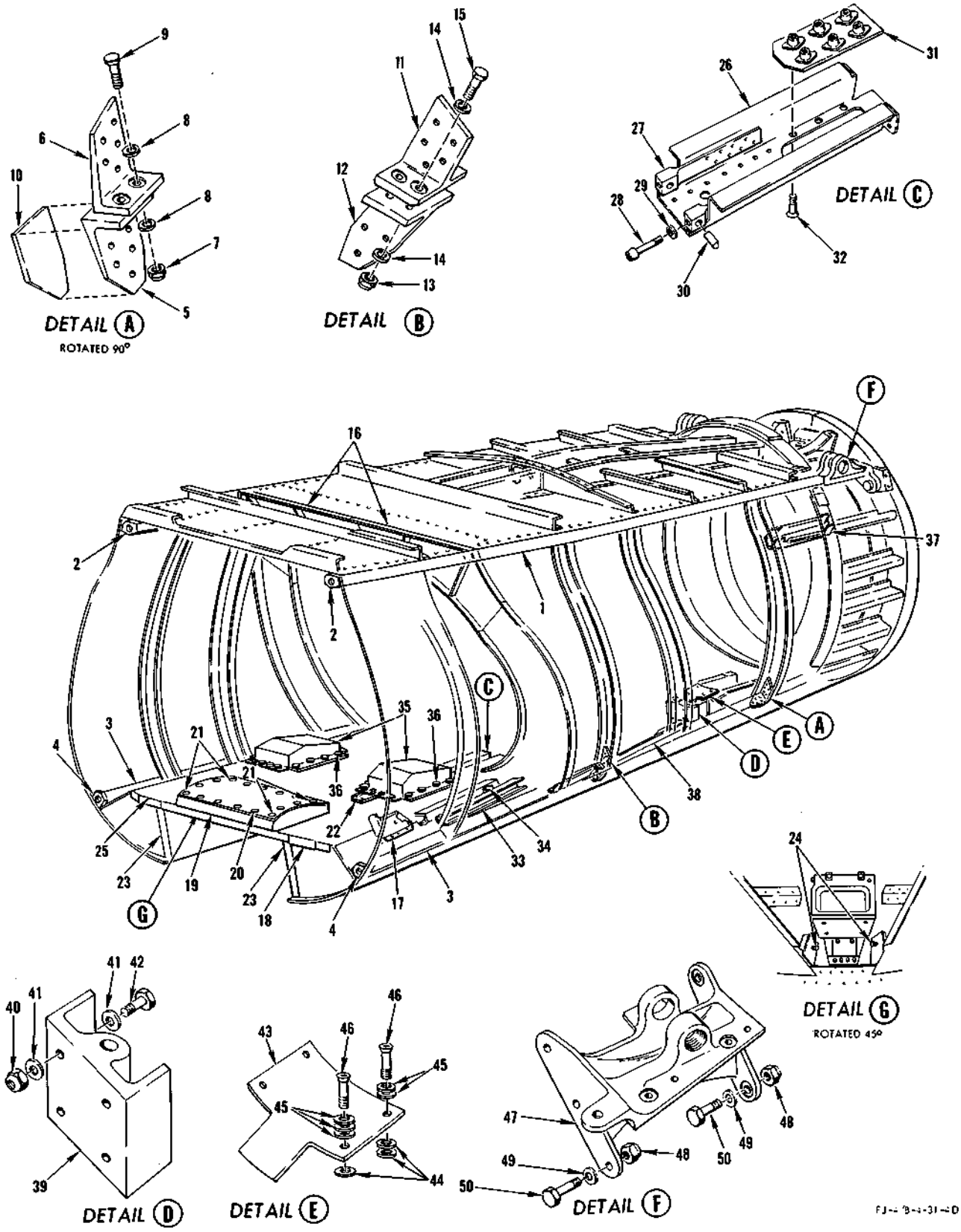

FIGURE 76 - FRAME ASSEMBLY (FUS STA 331.5 TO 339.781)

FRAME ASSEMBLY (FUS STA 331.5 TO 399.781)

FIGURE & INDEX NO.	PART NUMBER	1	2	3	4	5	6	7	NOMENCLATURE	UNITS PER ASSY.	USABLE ON CODE	S/C NO.
76-22	209-31750	.	.						ANGLE, Fuselage station 346.015 to station 350.93 canted lower deck LH	1		
-23	209-317117-1	.	.						WEB ASSEMBLY, Fuselage station 331.5 to canted station 350.93 arresting gear well LH	1	FR	
	209-317117-2	.	.						WEB ASSEMBLY, Fuselage station 331.5 to canted station 350.93 arresting gear well RH	1	FR	
-24	AN346-428	.	.						NUT	2	FR	
	2W18-416M	.	.						WASHER, Flat (NA) (89372)	4	FR	
	E2669	.	.						BOLT, Arresting hook support	2	FR	
-25	209-31713	.	.						WEB ASSEMBLY, Fuselage station 331.5 to canted station 350.93 lower	1	ET	
	209-31713-101	.	.						WEB ASSEMBLY, Fuselage station 331.5 to canted station 350.93 lower	1	FR	
-26	209-31791	.	.						SUPPORT, Fuselage station 350.93 to station 336.25 tow target release mechanism	1		
-27	209-31608-1	.	.						STRAP, Fuselage station 350.93 tow target support frame LH	1		
	209-31608-2	.	.						STRAP, Fuselage station 350.93 tow target support frame RH	1		
-28	NAS145-25	.	.						BOLT	1		
-29	NAS143-5C	.	.						WASHER	2		
-30	1452-054	.	.						NUT (EN) (72962)	2		
-31	209-316217	.	.						FILLER ASSEMBLY, Fuselage station 364.875 tow target replacement	1		
	3600-2-02	.	.		.				NUT, Anchor (NUS) (80539)	6		
-32	AN509-10R11	.	.						SCREW	6		
-33	209-317110-1	.	.						CHANNEL ASSEMBLY, Fuselage station 346.015 to canted station 350.93 speed brake closing mechanism LH	1	FR	
	209-317110-2	.	.						CHANNEL ASSEMBLY, Fuselage station 346.015 to canted station 350.93 speed brake closing mechanism RH	1	FR	
	3600-048	.	.		.				NUT, Anchor (NUS) (80539) (interchangeable with F5000-4 (KNM) (75237)	1	FR	
-34	209-317125	.	.		.				STOP, Speed brake closing mechanism	1	FR	
-35	209-317119-113	.	.						COVER, Fuselage station 331.5 to station 400.843 bottom deck assembly LH	1	FR	
	209-317119-114	.	.						COVER, Fuselage station 331.5 to station 400.843 bottom deck assembly RH	1	FR	
-36	AN3-4A	.	.						BOLT	32	FR	
	2W18-10M	.	.						WASHER, Flat (NA) (89372)	32	FR	
	2620-02	.	.						NUT, Anchor (NUS) (80539) (interchangeable with NAS684A3) (use on forward end only)	8	FR	
	3600-02	.	.						NUT, Anchor (NUS) (80539) (use on sides and rear only)	24	FR	
-37	209-31798	.							SUPPORT ASSEMBLY, Fuselage station 384.57 to station 393.031 engine tail-pipe adjustment side	2		
	ATTACHING PARTS											
	AN4-6A	.							BOLT	2		
	2W13-4	.							WASHER, Serrated (NA) (89372)	4		
	---*---											
	3700-2-048	.	.						NUT, Anchor (NUS) (80539)	4		
-38	209-317204-1	.							ANGLE, Fuselage canted station 350.93 to station 384.5 lower aft speed brake support LH	1	FR	
	209-317204-2	.							ANGLE, Fuselage canted station 350.93 to station 384.5 lower aft speed brake support RH	1	FR	
	209-31725	.							FRAME ASSEMBLY, Fuselage station 384.5 bottom	1	ET	
	209-317102	.							FRAME ASSEMBLY, Fuselage station 384.5 bottom	1	FR	
-39	209-55035	.	.						FITTING ASSEMBLY, Fuselage station 384.5 jacking	1		
	RL47SB-10	.	.		.				RING (ROSN) (83324)	1		
	RD209SB-9L	.	.		.				INSERT (ROSN) (83324)	1		
-40	AN363-428	.	.						NUT	4		
-41	2W18-416L	.	.						WASHER, Flat (NA) (89372)	8		
-42	AN4-6A	.	.						BOLT	4		
-43	209-31799	.							SUPPORT, Fuselage station 389.125 engine tail-pipe lower	1		
-44	2W17-416M	.							WASHER, Corrosion-resistant steel (NA) (89372)	6		
-45	2W17-416	.							WASHER, Corrosion-resistant steel (NA) (89372)	10		
-46	AN509-416-26	.							SCREW	4		
	209-31719	*1	.						FRAME ASSEMBLY, Fuselage station 393.406 to station 399.781 horizontal pivot support	1	ET	
	209-31719-91	.							FRAME ASSEMBLY, Fuselage station 393.406 to station 399.781 horizontal pivot support	1	FR	
-47	187-31729-5	.	.						FITTING, Fuselage horizontal stabilizer pivot LH	1		
	187-31729-6	.	.						FITTING, Fuselage horizontal stabilizer pivot RH	1		
-48	AN363-524	.	.						NUT	6		
-49	2W17-516	.	.						WASHER, Corrosion-resistant steel (NA) (89372)	6		
-50	AN5-7A	.	.						BOLT	6		

NOTE: *1 See figure 77 for breakdown of titanium components

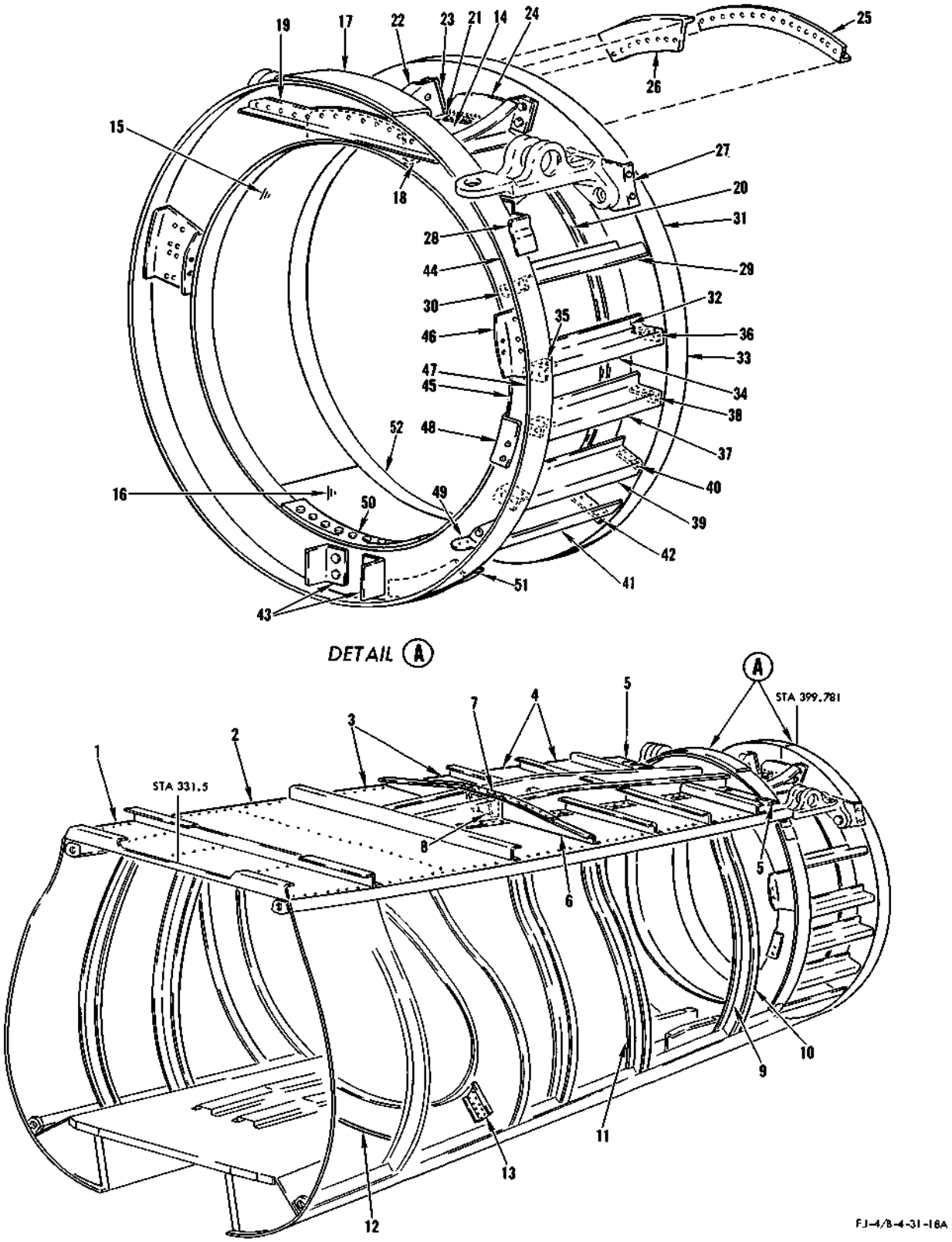

FIGURE 77 - FRAME ASSEMBLY TITANIUM COMPONENTS (FUS STA 331.5 TO 399.781)

FORWARD SPEED BRAKE AND ATTACHING PARTS

FIGURE & INDEX NO.	PART NUMBER	1 2 3 4 5 6 7 NOMENCLATURE	UNITS PER ASSY.	USABLE ON CODE	S/C NO.
78-44	BL8-11	. PIN, Ball-lok push button type (D. W. Price Corp) (97978)	2		
	181-39013-11	LATCH ASSEMBLY, Fuselage speed brake forward LH	1		
	181-39013-12	LATCH ASSEMBLY, Fuselage speed brake forward RH	1		
-45	181-39013-5	. SUPPORT, Fuselage speed brake forward latch assembly LH	1		
	181-39013-6	. SUPPORT, Fuselage speed brake forward latch assembly RH	1		
-46	187-39021-111	. LEVER ASSEMBLY, Fuselage speed brake forward latch LH	1		
	187-39021-112	. LEVER ASSEMBLY, Fuselage speed brake forward latch RH	1		
-47	NAS497	. . FITTING, Lubricator	2		
-48	HSBG-9SA	. . BEARING (HLF) (97613)	1		
-49	4B20B9-010	. . BUSHING, Press fit flanged (NA) (89372)	2		
-50	RL33SB-9	. . RING (ROSN) (83324)	1		
-51	RAD207SH-7.5L	. . INSERT (ROSN) (83324)	1		
-52	AN365-720	. NUT	1		
-53	2W18-716	. WASHER, Flat (NA) (89372)	3		
-54	AN7-22A	. BOLT	1		
-55	4B21M-S7-113	. BUSHING, Spacer (NA) (89372)	1		
-56	NAS428-5-10	. BOLT	1		
-57	AN316-5R	. NUT	1		
-58	RBC74220	. BEARING (RBC) (51588)	1		
-59	AN365-624	. NUT	1		
-60	AN960D616	. WASHER	2		
-61	AN6-16A	. BOLT	1		
-62	181-39030	. HOOK ASSEMBLY, Fuselage speed brake latch (superseded by 209-39030-13 together with 209-39067-3 for future procurement)	1		
	181-39030-13	. HOOK ASSEMBLY, Fuselage speed brake latch (181-39030-13 together with 209-39067-3 supersedes 181-39030 for future procurement)	1		
	181-39030-9	. . HUB, Fuselage speed brake latch hook assembly	1		
-63	AN365-428	. NUT	1		
-64	AN960D416	. WASHER	2		
-65	2W18-416	. WASHER, Flat (NA) (89372)	2		
-66	209-39067-3	. SPACER, Fuselage speed brake forward (209-39067-3 together with 181-39030-13 supersedes 181-39030 for future procurement)	1		
-67	AN4-20A	. BOLT	1		
-68	AN365-624	. NUT	1		
-69	2W18-616	. WASHER, Flat (NA) (89372)	3		
-70	4B19S6-113	. BUSHING, Press fit plain (NA) (89372)	1		
-71	AN6-22	. BOLT	1		
-72	AN365-1032	. NUT	1		
-73	AN960D10	. WASHER	2		
-74	NAS43DD3-42	. SPACER	2		
-75	AN3-20A	. BOLT	1		
-76	165-39015-3	. SPRING, Tension (superseded by 173-31830 for future procurement)	1		
	173-31830	. SPRING, Tension (supersedes 165-39015-3 for future procurement)	1		
-77	181-39009	SPRING, Tension	1		
	181-39011-1	DOOR ASSEMBLY, Fuselage speed brake forward lower hinge beam LH	1		
	181-39011-2	DOOR ASSEMBLY, Fuselage speed brake forward lower hinge beam RH	1		
-78	181-39011-11	. HINGE, Fuselage speed brake forward lower hinge beam door assembly LH	1		
	181-39011-12	. HINGE, Fuselage speed brake forward lower hinge beam door assembly RH	1		
-79	181-39011-13	. PLATE, Fuselage speed brake forward lower hinge beam door assembly LH	1		
	181-39011-14	. PLATE, Fuselage speed brake forward lower hinge beam door assembly RH	1		
	181-39011-7	. RUBBING STRIP, Fuselage speed brake lower hinge beam door assembly LH	1		
	181-39011-8	. RUBBING STRIP, Fuselage speed brake lower hinge beam door assembly RH	1		
-80	AN253-2-938	. PIN	1		
-81	181-39012	SPRING, Tension	1		
-82	209-31680-11	HINGE, Fuselage station 286.5 to station 298 speed brake lower hinge intercostal assembly LH (make from AN257HYC4-950)	1		
	209-31680-12	HINGE, Fuselage station 286.5 to station 298 speed brake lower hinge intercostal assembly RH (make from AN257HYC4-950)	1		

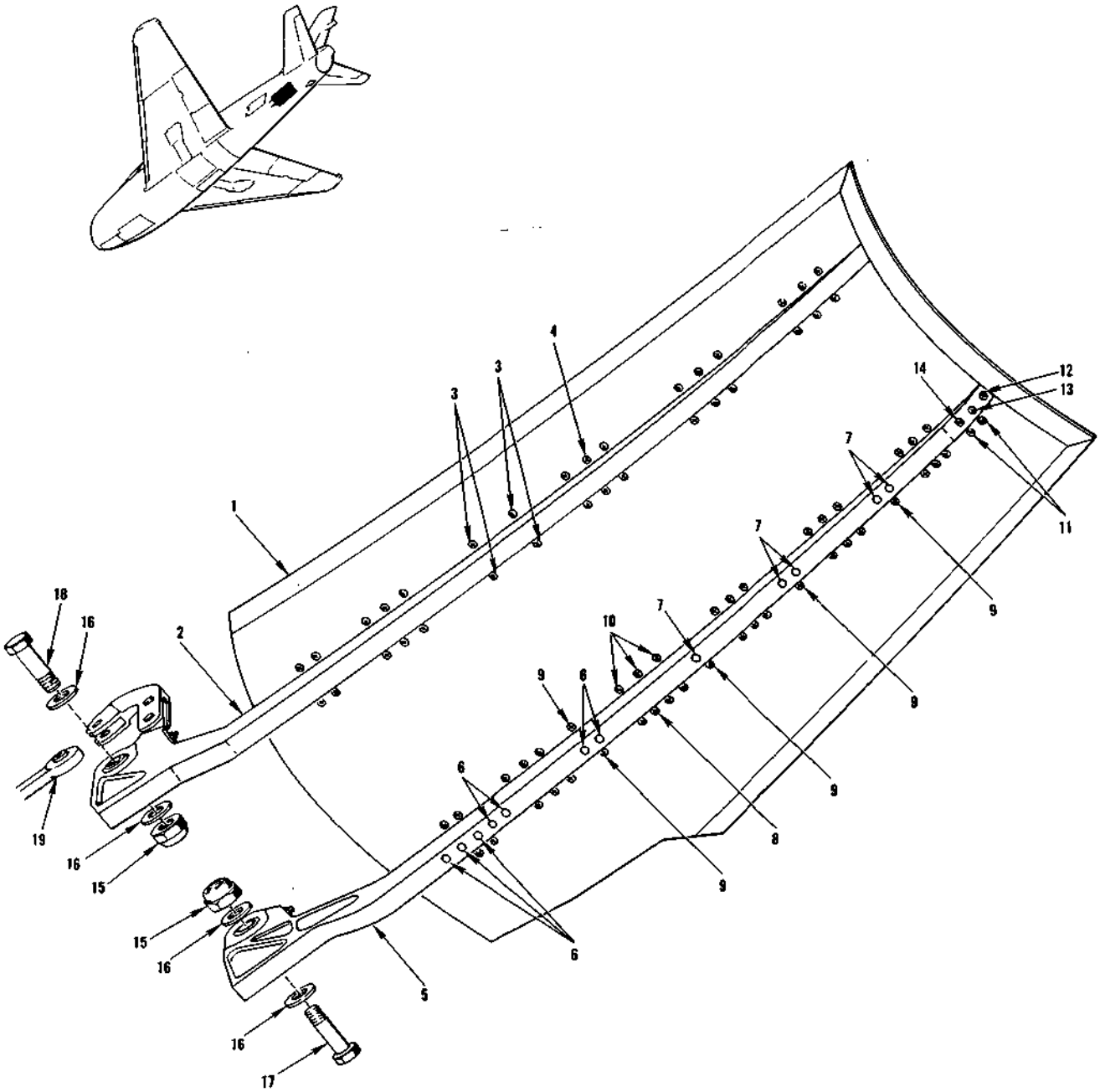

FJ-48-4-39-3A

FIGURE 79 - AFT SPEED BRAKE ATTACHING PARTS - APPLICABLE TO AIRCRAFT CODED (FR)

AFT SPEED BRAKE ATTACHING PARTS - APPLICABLE TO AIRCRAFT CODED (FR)

FIGURE & INDEX NO.	PART NUMBER	1 2 3 4 5 6 7 NOMENCLATURE	UNITS PER ASSY.	USABLE ON CODE	S/C NO.
79-1	209-39005-1	AFT SPEED BRAKE ASSEMBLY, Fuselage station 337.125 to station 380.125 LH (see figure 80 for additional breakdown)	1	FR	
	209-39005-2	AFT SPEED BRAKE ASSEMBLY, Fuselage station 337.125 to station 380.125 RH (see figure 80 for additional breakdown)	1	FR	
-2	209-39008-1	. HINGE ASSEMBLY, Aft fuselage speed brake outboard LH (see figure 80 for breakdown)	1	FR	
	209-39008-2	. HINGE ASSEMBLY, Aft fuselage speed brake outboard RH (see figure 80 for breakdown)	1	FR	
-3	7S15-10-13	. SCREW, 100° flush head close tolerance (NA) (89372)	4	FR	
	2W17-10	. WASHER, Corrosion-resistant steel (NA) (89372)	4	FR	
	AN365-1032	. NUT	4	FR	
-4	7S15-10-11	. SCREW, 100° flush head close tolerance (NA) (89372)	28	FR	
	2W18-10	. WASHER, Flat (NA) (89372)	28	FR	
	AN365-1032	. NUT	28	FR	
-5	209-39006-1	. HINGE ASSEMBLY, Aft fuselage speed brake inboard LH (see figure 80 for breakdown)	1	FR	
	209-39006-2	. HINGE ASSEMBLY, Aft fuselage speed brake inboard RH (see figure 80 for breakdown)	1	FR	
	209-39072-1	. CAP ASSEMBLY, Aft fuselage speed brake inboard hinge LH (see figure 80 for next assembly)	1	FR	
	209-39072-2	. CAP ASSEMBLY, Aft fuselage speed brake inboard hinge RH (see figure 80 for next assembly)	1	FR	
-6	6950-S-06-3	. DRIVE PIN (DEU) (17419)	7	FR	
-7	6951-S-06-3	. DRIVE PIN (DEU) (17419)	5	FR	
-8	7S15-10-14	. SCREW, 100° flush head close tolerance (NA) (89372)	32	FR	
	2W18-10	. WASHER, Flat (NA) (89372)	32	FR	
	AN365-1032	. NUT	32	FR	
-9	7S15-10-11	. SCREW, 100° flush head close tolerance (NA) (89372)	5	FR	
	2W18-10	. WASHER, Flat (NA) (89372)	5	FR	
	AN365-1032	. NUT	5	FR	
-10	7S15-516-15	. SCREW, 100° flush head close tolerance (NA) (89372)	3	FR	
	2W17-516M	. WASHER, Corrosion-resistant steel (NA) (89372)	3	FR	
	AN365-516	. NUT	3	FR	
-11	7S15-10-12	. SCREW, 100° flush head close tolerance (NA) (89372)	2	FR	
	2W18-10M	. WASHER, Flat (NA) (89372)	2	FR	
	AN364-1032	. NUT	2	FR	
-12	7S15-416-18	. SCREW, 100° flush head close tolerance (NA) (89372)	1	FR	
	2W17-416	. WASHER, Corrosion-resistant steel (NA) (89372)	1	FR	
	AN364-428	. NUT	1	FR	
-13	7S15-10-18	. SCREW, 100° flush head close tolerance (NA) (89372)	1	FR	
	2W17-10	. WASHER, Corrosion-resistant steel (NA) (89372)	1	FR	
	AN365-1032	. NUT	1	FR	
-14	7S15-10-20	. SCREW, 100° flush head close tolerance (NA) (89372)	1	FR	
	2W17-10	. WASHER, Corrosion-resistant steel (NA) (89372)	1	FR	
	AN365-1032	. NUT	1	FR	
-15	AN365-624	NUT	2	FR	
-16	2W18-616	WASHER, Flat (NA) (89372)	4	FR	
-17	AN6A14	BOLT	1	FR	
-18	AN6A15	BOLT	1	FR	
-19	209-52765	BUNGEE ASSEMBLY, Speed brake aft fuselage (see Surface Controls for complete breakdown)	1	FR	

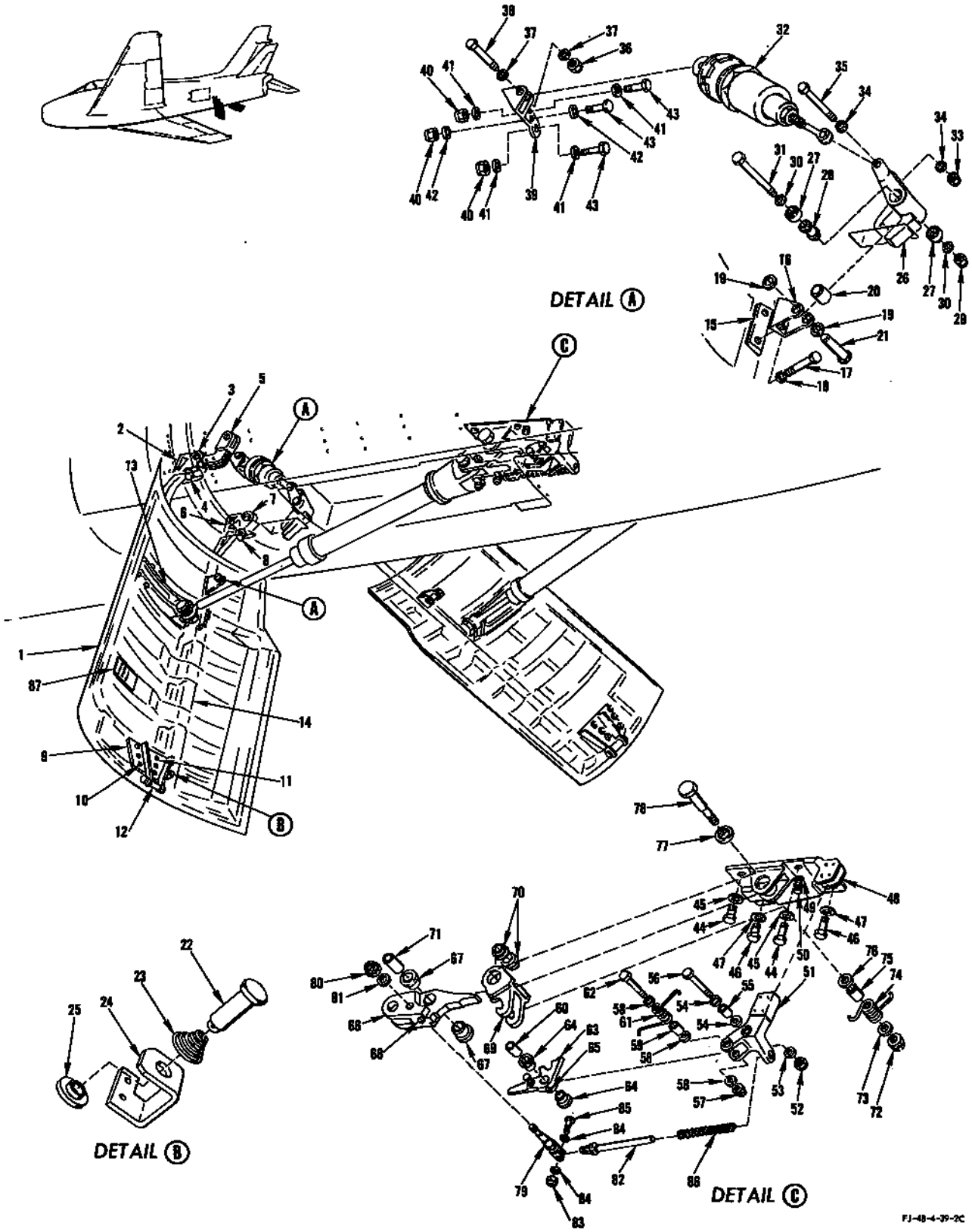

FIGURE 80 - AFT SPEED BRAKE - APPLICABLE TO AIRCRAFT CODED (FR)

AFT SPEED BRAKE - APPLICABLE TO AIRCRAFT CODED (FR)

FIGURE & INDEX NO.	PART NUMBER	1 2 3 4 5 6 7 NOMENCLATURE	UNITS PER ASSY.	USABLE ON CODE	S/C NO.
80-1	209-39005-1	SPEED BRAKE ASSEMBLY, Aft fuselage station 337.125 to station 380.125 LH (see figure 79 for additional breakdown)	1	FR	
	209-39005-2	SPEED BRAKE ASSEMBLY, Aft fuselage station 337.125 to station 380.125 RH (see figure 79 for additional breakdown)	1	FR	
-2	209-39008-1	. HINGE ASSEMBLY, Aft fuselage speed brake outboard LH	1	FR	
	209-39008-2	. HINGE ASSEMBLY, Aft fuselage speed brake outboard RH	1	FR	
-3	BLR6445GC	. . BEARING (SWPC) (81376)	1	FR	
-4	MS15001-1	. . FITTING, Lubrication	1	FR	
-5	209-39070-3	. HORN, Aft fuselage speed brake outer hinge (LH only)	1	FR	
-6	209-39006-1	. HINGE ASSEMBLY, Aft fuselage speed brake inboard LH	1	FR	
	209-39006-2	. HINGE ASSEMBLY, Aft fuselage speed brake inboard RH	1	FR	
-7	BLR6445GC	. . BEARING (SWPC) (81376)	1	FR	
-8	MS15001-1	. . FITTING, Lubrication	1	FR	
-9	209-39073-5	. FITTING, Aft fuselage speed brake aft latch inboard LH	1	FR	
	209-39073-6	. FITTING, Aft fuselage speed brake aft latch inboard RH	1	FR	
	209-39075-3	. FITTING, Aft fuselage speed brake aft latch bottom LH	1	FR	
	209-39075-4	. FITTING, Aft fuselage speed brake aft latch bottom RH	1	FR	
-10	NAS221-11	. SCREW	5	FR	
	2W1-12-18-63	. WASHER, Plain (NA) (89372)	5	FR	
	52-1650-02	. NUT (EN) (72962)	5	FR	
-11	AN509-10-11	. SCREW	1	FR	
	52-1650-02	. NUT (EN) (72962)	1	FR	
-12	AN396-57	. PIN	1	FR	
	2W17-616	. WASHER, Corrosion-resistant steel (NA) (89372)	1	FR	
-13	209-39028-1	. FITTING, Cylinder to aft speed brake attaching LH	1	FR	
	209-39028-2	. FITTING, Cylinder to aft speed brake attaching RH	1	FR	
-14	209-39072-11	. CAP ASSEMBLY, Aft fuselage speed brake inboard hinge LH	1	FR	
	209-39072-12	. CAP ASSEMBLY, Aft fuselage speed brake inboard hinge RH	1	FR	
-15	209-39055-3	. . SHIM, Aft fuselage speed brake inboard hinge cap	1	FR	
	3600-048	. . NUT, Anchor (NUS) (80539)	2	FR	
-16	209-39071-1	. FITTING, Aft speed brake door latch forward LH	1	FR	
	209-39071-2	. FITTING, Aft speed brake door latch forward RH	1	FR	
	ATTACHING PARTS				
-17	AN4-11A	. BOLT	2	FR	
-18	2W18-416M	. WASHER, Flat (NA) (89372)	2	FR	
	---*---				
-19	2W17-616	. WASHER, Corrosion-resistant steel (NA) (89372)	2	FR	
-20	RBC74220	. BEARING (RBC) (51588)	1	FR	
-21	AN396-43	. PIN	1	FR	
	244-52713	. CLIP ASSEMBLY, Speed brake aft fuselage spring loaded actuator (LH only)	1	FR	
-22	244-52712	. . PIN, Speed brake aft fuselage spring loaded (LH only)	1	FR	
-23	244-52715	. . SPRING, Compression (LH only)	1	FR	
-24	244-52714	. . CLIP, Speed brake aft fuselage spring loaded actuator (LH only)	1	FR	
-25	244-52716	. . BUSHING, Speed brake aft fuselage shoulder (LH only)	1	FR	
	209-52783-11	ARM ASSEMBLY, Speed brake aft fuselage door closing pickup LH	1	FR	
	209-52783-12	ARM ASSEMBLY, Speed brake aft fuselage door closing pickup RH	1	FR	
-26	209-52783-3	. ARM, Speed brake aft fuselage door closing pickup LH	1	FR	
	209-52783-4	. ARM, Speed brake aft fuselage door closing pickup RH	1	FR	
-27	AN200KP4	. BEARING	2	FR	
-28	4S7-5-1.094	. SPACER, Flanged dual bearing (NA) (89372)	1	FR	
-29	AN365-428	NUT	1	FR	
-30	2W18-416M	WASHER, Flat (NA) (89372)	2	FR	
-31	AN174-15A	BOLT	1	FR	
-32	209-52775	BUNGEE ASSEMBLY, Speed brake aft fuselage door closing (see figure 81 for breakdown)	1	FR	
-33	AN365-428	NUT	1	FR	
-34	2W18-416	WASHER, Flat (NA) (89372)	2	FR	
-35	AN174-14A	BOLT	1	FR	
-36	AN365-428	NUT	1	FR	
-37	2W18-416M	WASHER, Flat (NA) (89372)	2	FR	
-38	AN174-13A	BOLT	1	FR	
-39	209-52774-1	SUPPORT, Speed brake aft fuselage door closing bungee LH	1	FR	
	209-52774-2	SUPPORT, Speed brake aft fuselage door closing bungee RH	1	FR	
-40	AN365-428	NUT	3	FR	
-41	2W18-416M	WASHER, Flat (NA) (89372)	4	FR	
-42	2W18-416	WASHER, Flat (NA) (89372)	2	FR	
-43	AN4-7	BOLT	3	FR	
	209-527101-1	LATCH MECHANISM ASSEMBLY, Aft fuselage speed brake door LH	1	FR	
	209-527101-2	LATCH MECHANISM ASSEMBLY, Aft fuselage speed brake door RH	1	FR	
	ATTACHING PARTS				
-44	AN4-10A	BOLT	2	FR	
-45	2W17-416	WASHER, Corrosion-resistant steel (NA) (89372)	2	FR	
	K2000-428	NUT PLATE (KNM) (75237)	2	FR	
-46	AN5-10A	BOLT	2	FR	
-47	2W17-516	WASHER, Corrosion-resistant steel (NA) (89372)	2	FR	
	K3000-524	NUT PLATE (KNM) (75237)	2	FR	
	---*---				
	209-527102-1	. MOUNTING ASSEMBLY, Speed brake aft fuselage latch mechanism LH	1	FR	
	209-527102-2	. MOUNTING ASSEMBLY, Speed brake aft fuselage latch mechanism RH	1	FR	
-48	209-52793-11	. . SUPPORT ASSEMBLY, Speed brake aft fuselage latch mechanism LH	1	FR	
	209-52795-12	. . SUPPORT ASSEMBLY, Speed brake aft fuselage latch mechanism RH	1	FR	
-49	1191-4CNx-1/4	. . . INSERT, Heli-coil (AF) (91767)	1	FR	
-50	NAS428H4-5	. . . BOLT	1	FR	
	1N7-4A	. . . NUT, Check (NA) (89372)	1	FR	

AFT SPEED BRAKE - APPLICABLE TO AIRCRAFT CODED (FR)

FIGURE & INDEX NO.	PART NUMBER	1	2	3	4	5	6	7	NOMENCLATURE	UNITS PER ASSY.	USABLE ON CODE	S/C NO.
80-51	209-52798-3	.	.						FITTING, Speed brake aft fuselage latch operating mechanism LH	1	FR	
	209-52798-4	.	.						FITTING, Speed brake aft fuselage latch operating mechanism RH	1	FR	
-52	AN365-428	.							NUT	1	FR	
-53	2W18-416M	.							WASHER, Flat (NA) (89372)	1	FR	
-54	2W18-416	.							WASHER, Flat (NA) (89372)	2	FR	
-55	4B21M-S4-018	.							BUSHING, Spacer (NA) (89372)	1	FR	
-56	AN174-20A	.							BOLT	1	FR	
	209-52739-1	.							PAWL ASSEMBLY, Speed brake aft fuselage latch operating LH	1	FR	
	209-52739-2	.							PAWL ASSEMBLY, Speed brake aft fuselage latch operating RH	1	FR	
	ATTACHING PARTS											
-57	AN310-4	.							NUT	1	FR	
-58	2W18-416	.							WASHER, Flat (NA) (89372)	3	FR	
-59	4B21M-S4-021	.							BUSHING, Spacer (NA) (89372)	1	FR	
-60	4B21M-S4-020	.							BUSHING, Spacer (NA) (89372)	1	FR	
-61	209-52796-1	.							SPRING, Torsion speed brake latch mechanism No. 1 LH	1	FR	
	209-52796-2	.							SPRING, Torsion speed brake latch mechanism No. 1 RH	1	FR	
-62	NAS464P4-27	.							BOLT	1	FR	
	---*---											
-63	209-52739-3	.	.						PAWL, Speed brake aft fuselage latch operating pawl assembly LH	1	FR	
	209-52739-4	.	.						PAWL, Speed brake aft fuselage latch operating pawl assembly RH	1	FR	
-64	4B20B6-006	.	.						BUSHING, Press fit flanged (NA) (89372)	2	FR	
-65	NAS516-1	.	.						FITTING, Lubricator	1	FR	
	209-527111-1	.							BELLCRANK ASSEMBLY, Speed brake aft fuselage door latch LH	1	FR	
	209-527111-2	.							BELLCRANK ASSEMBLY, Speed brake aft fuselage door latch RH	1	FR	
-66	209-527111-3	.	.						BELLCRANK, Speed brake aft fuselage door latch bellcrank assembly LH	1	FR	
	209-527111-4	.	.						BELLCRANK, Speed brake aft fuselage door latch bellcrank assembly RH	1	FR	
-67	4B20M-S12-007	.	.						BUSHING, Press fit flanged (NA) (89372)	2	FR	
-68	NAS516-1	.	.						FITTING, Lubricator	1	FR	
	209-527112-1	.							LATCH ASSEMBLY, Speed brake aft fuselage door LH	1	FR	
	209-527112-2	.							LATCH ASSEMBLY, Speed brake aft fuselage door RH	1	FR	
-69	209-527112-3	.	.						LATCH, Speed brake aft fuselage door latch assembly	1	FR	
-70	4B20M-S10-008	.	.						BUSHING, Press fit flanged (NA) (89372)	2	FR	
-71	4B21M-S10-020	.							BUSHING, Spacer (NA) (89372)	1	FR	
-72	AN310-6	.							NUT	1	FR	
-73	2W1AL24-26-062	.							WASHER, Plain (NA) (89372)	1	FR	
-74	209-527114-1	.							SPRING, Torsion speed brake aft fuselage latch operating mechanism LH	1	FR	
	209-527114-2	.							SPRING, Torsion speed brake aft fuselage latch operating mechanism RH	1	FR	
-75	4B21M-S6-024	.							BUSHING, Spacer (NA) (89372)	1	FR	
-76	2W1AL28-26-062	.							WASHER, Plain (NA) (89372)	1	FR	
-77	2W10-10	.							WASHER, Countersunk (NA) (89372)	1	FR	
-78	209-527113	.							BOLT, Speed brake aft fuselage latch operating mechanism pivot	1	FR	
-79	209-52792	.							PIN, Speed brake aft fuselage latch operating mechanism	1	FR	
-80	AN310-4	.							NUT	1	FR	
-81	2W18-416	.							WASHER, Flat (NA) (89372)	1	FR	
-82	209-52794	.							PIN, Speed brake aft fuselage latch operating	1	FR	
-83	AN320-3	.							NUT	1	FR	
-84	2W18-10	.							WASHER, Flat (NA) (89372)	2	FR	
-85	AN23-11	.							BOLT	1	FR	
-86	209-52791	.							SPRING, Compression	1	FR	
-87	AN7510-1								PLATE	1	FR	

CHASSIS AND ATTACHING PARTS

FIGURE & INDEX NO.	PART NUMBER	1 2 3 4 5 6 7 NOMENCLATURE	UNITS PER ASSY.	USABLE ON CODE	S/C NO.
82-1	181-56201-10	SNUBBER ASSEMBLY, Arresting gear (see figure 84 for breakdown) (see Technical Manual NAVAER 03-25-517 for additional information)	1		
-2	NAS464-10A39	BOLT	1		
	4B21M-S10-121	BUSHING, Spacer (NA) (89372)	1		
	AN364-1018	NUT	1		
-3	AN10-20A	BOLT	1		
	2W18-1016	WASHER, Flat (NA) (89372)	1		
	AN365-1018	NUT	1		
-4	AN320-4	NUT	1		
-5	2W18-416	WASHER, Flat (NA) (89372)	2		
-6	AN24-12	BOLT	1		
-7	176-56375	LINK, Arresting gear fairing door attaching female	1		
-8	AN394-15	PIN	1		
-9	2W18-416M	WASHER, Flat (NA) (89372)	1		
-10	179-56374	LINK, Arresting gear fairing door attaching male	1		
-11	AN365-1032	NUT	1		
-12	181-56375	WASHER, Arresting gear trunnion fairing link attaching eyebolt	1		
-13	181-56373	BOLT, Arresting gear trunnion door link attaching	1		
-14	181-56376-5	BOLT ASSEMBLY, Arresting gear trunnion door attaching	1		
-15	4B20B6-010	. BUSHING, Press fit flanged (NA) (89372)	2		
	AN944-201	. FITTING, Lubricator	1		
	181-56376-7	. PIN, Arresting gear trunnion door attaching bolt assembly	1		
-16	AN365-428	NUT	1		
	2W18-416	WASHER, Flat (NA) (89372)	1		
-17	2W18-616	WASHER, Flat (NA) (89372) (LH only)	1		
-18	2W18-616M	WASHER, Flat (NA) (89372) (LH only)	1		
-19	4B21M-S4-012	BUSHING, Spacer (NA) (89372)	1		
-20	209-56126	LINK ASSEMBLY, Arresting gear to tow target releast (LH only)	1		
-21	4B18-6-91	. BUSHING, Shoulder (NA) (89372) (LH only)	1		
-22	2W1-16-32-125	WASHER, Plain (NA) (89372)	1		
-23	AN364-1614	NUT	1		
-24	2W18-1616	WASHER, Flat (NA) (89372)	1		
-25	181-56124	PIN ASSEMBLY, Arresting gear trunnion	1		
	AN944-201	. FITTING, Lubricator	1		
	181-56124-3	. BOLT, Arresting gear trunnion pin assembly	1		
-26	181-56127	WASHER, Arresting gear trunnion	2		
	181-56101-20	CHASSIS ASSEMBLY, Arresting hook	1		
-27	AN24-46A	. BOLT	2		
	2W18-416L	. WASHER, Flat (NA) (89372)	AR		
	2W18-416M	. WASHER, Flat (NA) (89372)	AR		
	AN364-428	. NUT	1		
-28	AN365-428	. NUT	3		
-29	2W18-416	. WASHER, Flat (NA) (89372)	6		
-30	AN4-10A	. BOLT	3		
-31	181-56132	*1 . BRACKET, Arresting gear uplock roller support lower	1		
-32	181-56133	*1 . BRACKET, Arresting gear uplock roller support lower	1		
	181-56164	. UPLOCK ASSEMBLY, Arresting gear	1		
-33	181-56156	. . WASHER, Arresting gear uplock adjustment	4		
-34	181-56167	. . BRACKET, Arresting gear uplock roller support	1		
-35	179-56165	. . ROLLER ASSEMBLY, Arresting gear uplock	1		
-36	B-78	. . . BEARING, DC needle unit type B series (TOR) (60380)	2		
-37	179-56166	. . SPACER, Arresting gear uplock roller	1		
-38	AN365-524	. . NUT	1		
-39	AN960D516L	. . WASHER	2		
-40	AN5-33A	. . BOLT	1		
-41	AN365-428	. NUT	4		
-42	2W18-416L	. WASHER, Flat (NA) (89372)	8		
-43	AN4-7A	. BOLT	4		
-44	194-56153	. BLOCK ASSEMBLY, Arresting gear hook point	1	AW	
	194-56153-11	. BLOCK ASSEMBLY, Arresting gear hook point	1	BY	
-45	AN365-1018	. NUT	1		
-46	AN10-36A	. BOLT	1		
-47	2W18-1016	. WASHER, Flat (NA) (89372)	1		
-48	NAF604324	. POINT, Arrest. hook forged design 80,000 lb design limit load assy and detail	1		
	194-56107-21	. HOOK ASSEMBLY, Arresting gear	1		
-49	EB-126	. . NUT (EN) (72962)	2		
-50	2W1AL48-40-62	. . WASHER, Plain (NA) (89372)	2		
-51	NAS152-59	. . BOLT	1		
-52	NAS152-75	. . BOLT	1		
-53	2W10-12	. . WASHER, Countersunk (NA) (89372)	2		
-54	194-56109-31	. . FITTING ASSEMBLY, Arresting gear hook tube LH	1		
-55	194-56109-22	. . FITTING ASSEMBLY, Arresting gear hook tube RH	1		
-56	AN42-27	. . BOLT (RH only)	1		
	2W18-10	. . WASHER, Flat (NA) (89372)	3		
	AN310-3	. . NUT	1		
	181-56306	. ROLLER ASSEMBLY, Arresting gear aft door actuating (LH only)	1		
-57	181-56306-3	. . ROLLER, Arresting gear aft door actuating roller assembly (LH only)	1		
-58	B-95	. . BEARING (TOR) (60380) (LH only)	2		
-59	181-56307	. SPACER, Arresting gear aft door actuating roller (LH only)	1		
-60	AN365-720	. NUT (LH only)	1		
-61	2W18-716	. WASHER, Flat (NA) (89372) (LH only)	1		
-62	2W1-28-32-64	. WASHER, Plain (NA) (89372) (LH only)	1		
-63	AN7-24A	. BOLT (LH only)	1		

CHASSIS AND ATTACHING PARTS

FIGURE & INDEX NO.	PART NUMBER	1 2 3 4 5 6 7 NOMENCLATURE	UNITS PER ASSY.	USABLE ON CODE	S/C NO.
82-64	194-56130	. NAMEPLATE, Arresting gear hook (LH only)	1		
	ATTACHING PARTS				
	AN500-6-8	. SCREW	2		
	AN960D6	. WASHER	4		
	AN365-632	. NUT	2		
	---*---				
-65	209-56121-5	FITTING ASSEMBLY, Arresting hook fuselage station 286.5 to station 298 trunnion LH	1		
	209-56121-6	FITTING ASSEMBLY, Arresting hook fuselage station 286.5 to station 298 trunnion RH	1		
-66	HSBG-20SA	. BEARING (HLF) (97613)	1		
-67	NAS50-231	. RING	1		
-68	AN365-524C	NUT	2		
-69	2W17-516M	WASHER, Corrosion-resistant (NA) (89372)	4		
-70	NAS464-5A9	BOLT	2		
-71	AN365-524	NUT	2		
-72	2W18-516M	WASHER, Flat (NA) (89372)	4		
-73	AN5-7A	BOLT	2		
-74	NAS464-5A8	BOLT	2		
	2W17-516M	WASHER, Corrosion-resistant (NA) (89372)	4		
	AN364-524C	NUT	2		
-75	NAS464-5A7	BOLT	2		
	2W17-516M	WASHER, Corrosion-resistant (NA) (89372)	4		
	AN364-524C	NUT	2		
-76	AN5-7A	BOLT	3		
	2W17-516M	WASHER, Corrosion-resistant (NA) (89372)	6		
	AN363-524	NUT	3		
-77	AN5-11A	BOLT	2		
	2W17-516M	WASHER, Corrosion-resistant (NA) (89372)	4		
	AN363-524	NUT	2		
-78	AN4-7A	BOLT	1		
	2W17-416M	WASHER, Corrosion-resistant (NA) (89372)	2		
	AN363-428	NUT	1		
-79	AN4-6A	BOLT (LH only)	1		
	AN4-7A	BOLT (RH only)	1		
	2W17-416M	WASHER, Corrosion-resistant (NA) (89372)	2		
	AN363-428	NUT	1		
-80	AN4-11A	BOLT	2		
	2W17-416M	WASHER, Corrosion-resistant (NA) (89372)	4		
	AN363-428	NUT	2		
-81	AN364-524	NUT	2		
	2W17-516	WASHER, Corrosion-resistant (NA) (89372) (use under nut)	2		
	MS20002C5	WASHER (use under bolthead)	2		
	NAS145-18	BOLT	2		
-82	AN364-524	NUT	3		
	2W17-516	WASHER, Corrosion-resistant (NA) (89372) (use under nut)	3		
	MS20002C5	WASHER (use under bolthead)	3		
	NAS145-16	BOLT	3		
-83	AN364-624	NUT	1		
	2W17-616	WASHER, Corrosion-resistant (NA) (89372) (use under nut)	1		
	MS20002C6	WASHER (use under bolthead)	1		
	NAS146-20	BOLT	1		
-84	AN364-624	NUT	1		
	2W17-616	WASHER, Corrosion-resistant (NA) (89372) (use under nut)	1		
	MS20002C6	WASHER (use under bolthead)	1		
	NAS146-21	BOLT	1		
-85	181-56131-11	BRACKET ASSEMBLY, Arresting gear snubber attachment LH	1		
-86	181-56131-5	. DOUBLER, Arresting gear snubber attachment bracket assembly LH	1		
	840746	. CLAMP (WK) (33525) (superseded by 209-73546 for future procurement)	1		
	209-73546	. CLAMP ASSEMBLY (LH only) (supersedes 840746 (WK) (33525) for future procurement)	1		
	4B20M-S10-010	. BUSHING, Press fit flanged (NA) (89372)	1		
	181-56131-13	. FRAME, Arresting gear snubber attachment bracket assembly LH	1		
-87	181-56131-2	BRACKET ASSEMBLY, Arresting gear snubber attachment RH	1		
	4B20M-S10-010	. BUSHING, Press fit flanged (NA) (89372)	1		
	181-56131-6	. DOUBLER, Arresting gear snubber attachment bracket assembly RH	1		
	181-56131-4	. FRAME, Arresting gear snubber attachment bracket assembly RH	1		

NOTE: *1 181-56132 together with 181-56133 supersede 181-58169 and 181-56168 for future procurement

BUMPER AND UPLOCK ASSEMBLY

FIGURE & INDEX NO.	PART NUMBER	1 2 3 4 5 6 7 NOMENCLATURE	UNITS PER ASSY.	USABLE ON CODE	S/C NO.
83-1		ARRESTING GEAR CONTROLS (see Surface and Secondary Controls)			
-2	181-56171	BRACKET, Arresting gear uplock sector support	1		
-3	209-56172	BRACKET, Arresting gear uplock sector support	1		
-4	209-56162	SECTOR ASSEMBLY, Arresting gear uplock	1		
	4S7-4-0.750	. SPACER, Flanged dual bearing (NA) (89372)	1		
-5	AN201KP4A	. BEARING	2		
-6	AN365-428	NUT	1		
-7	2W18-416	WASHER, Flat (NA) (89372)	2		
-8	AN4-20	BOLT	1		
-9	AN365-1032	NUT	1		
-10	2W18-10	WASHER, Flat (NA) (89372)	1		
-11	AN509-10R19	SCREW	1		
-12	181-56159-3	ROD ASSEMBLY, Arresting gear uplock and bumper operation	1		
-13	181-56159-9	. ROD, Arresting gear uplock and bumper operation rod assembly	1		
-14	F34-14	. BEARING, Heim unibal spherical rod end (HEC) (73134)	2		
-15	AN316-4	. NUT	2		
-16	AN320-3	NUT	1		
-17	2W18-10	WASHER, Flat (NA) (89372) (LH only)	1		
-18	AN23-18	BOLT	1		
-19	AN365-428	NUT	4		
-20	2W18-416	WASHER, Flat (NA) (89372)	9		
-21	4B19M-S4-020	BUSHING, Press fit plain (NA) (89372)	1		
-22	AN4-14A	BOLT	1		
-23	AN4-7A	BOLT	3		
-24	181-56144	SUPPORT ASSEMBLY, Arresting gear uplock shaft	2		
-25	M-11121	. BEARING, DC needle type M series (TOR) (60380)	2		
-26	2W1AL48-38-25	WASHER, Plain (NA) (89372) (RH and LH sides)	AR		
-27	209-56143	SHAFT ASSEMBLY, Arresting gear uplock operating	1	Y	
	209-56143-21	SHAFT ASSEMBLY, Arresting gear uplock operating	1	Z	
-28	181-56149	. SHAFT, Arresting gear uplock	1		
-29	AN364-1032	. NUT	2		
-30	AN975-3	. WASHER	2		
-31	AN386-2-11A	. PIN	2		
-32	181-56141	. ARM ASSEMBLY, Arresting gear bumper operating	1		
-33	B-118	. . BEARING, DC needle unit type B series (TOR) (60380)	1		
-34	209-56146	. SPRING, Arresting gear bumper	1		
-35	181-56148-3	. ARM, Arresting gear sequence valve operating	1		
	181-56161-5	. HOOK ASSEMBLY, Arresting gear uplock	1	Y	
	194-56161-11	. HOOK ASSEMBLY, Arresting gear uplock operating	1	Z	
-36	181-56161-3	. . HOOK, Arresting gear uplock hook assembly	1	Y	
	194-56161-3	. . HOOK, Arresting gear uplock hook assembly	1	Z	
-37	B-1112	. . BEARING, DC needle unit type B series (TOR) (60380)	1	Y	
	B-112	. . BEARING, DC needle unit type B series (TOR) (60380)	1	Z	
-38	NAS42DD4-28	. . SPACER	1		
-39	2W1AL45-36-62	. WASHER, Plain (NA) (89372)	1		
-40	181-56155	. SPRING, Arresting gear	1		
-41	NAS43C12-128	. SPACER	1		
-42	181-56147	. ARM, Arresting gear uplock shaft operating	1		
-43	181-56150	CLIP, Arresting gear bumper spring attachment	1		
-44	AN320-3	NUT	1		
-45	2W18-10	WASHER, Flat (NA) (89372) (LH only)	1		
-46	AN23-15	BOLT	1		
-47	181-56135	* ROD ASSEMBLY, Arresting gear bumper operation	1		
-48	F34-14	. BEARING, Heim unibal spherical rod end (HEC) (73134)	1		
-49	AN316-4	. NUT	2		
-50	181-56135-3	. ROD, Arresting gear bumper operation rod assembly	1		
-51	181-56136	* . ROD END, Arresting gear bumper operating	1		
-52	2W18-416M	WASHER, Flat (NA) (89372)	2		
-53	AN394-11	PIN	2		
-54	S-1452-048	NUT, Self locking barrel light weight (EN) (72962)	1		
-55	2W18-416	WASHER, Flat (NA) (89372)	1		
-56	AN4-12A	BOLT	1		
-57	181-56137-3	* LINK, Arresting gear bumper lock	1		
-58	4B21B4-014	BUSHING, Spacer (NA) (89372)	1		
-59	209-56138-3	* ARM, Arresting gear bumper lock	1		
-60	2W18-10M	WASHER, Flat (NA) (89372)	1		
-61	AN393-13	PIN	1		
-62	AN320-3	NUT	1		
-63	2W18-10	WASHER, Flat (NA) (89372)	1		
-64	181-56154	ROLLER, Arresting gear bumper	1		
-65	AN23-22	BOLT	1		
-66	181-56165	BUMPER ASSEMBLY, Arresting gear	1		
	ATTACHING PARTS				
-67	AN364-820	NUT	1		
-68	2W18-816	WASHER, Flat (NA) (89372)	1		
-69	AN8-70A	BOLT	1		
	---*---				
-70	AN365-1032	. NUT	4		
-71	2W18-10	. WASHER, Flat (NA) (89372)	8		
-72	AN3-10A	. BOLT	4		
	181-56158	. PLATE ASSEMBLY, Arresting gear bumper fitting	1		
-73	181-56158-3	. . BLOCK, Arrest. gear bumper fit. plate assy (synthetic rubber)	1		
-74	4B21S3-008	. . BUSHING, Spacer (NA) (89372)	4		

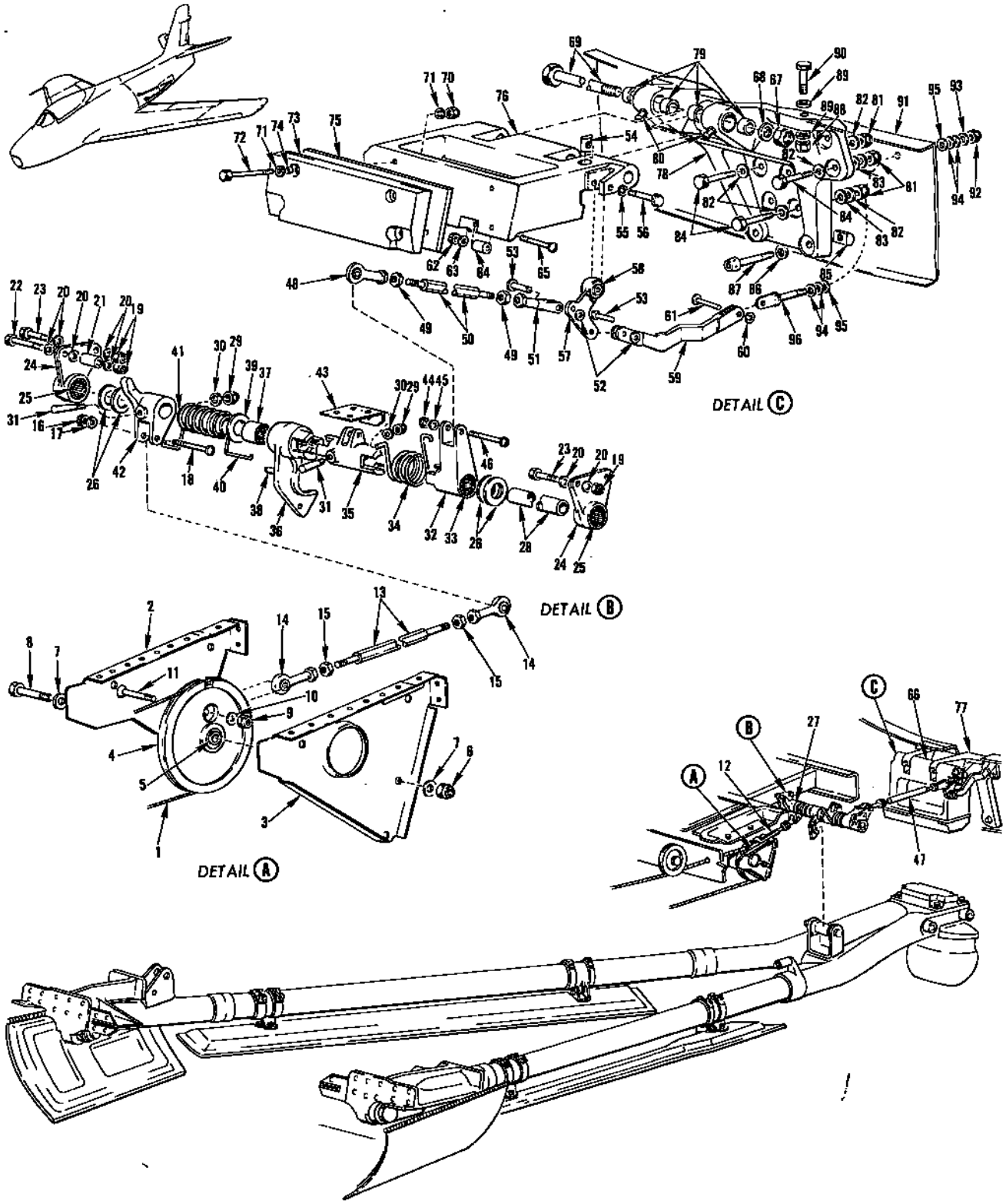

FIGURE 83 - BUMPER AND UPLOCK ASSEMBLY

BUMPER AND UPLOCK ASSEMBLY

FIGURE & INDEX NO.	PART NUMBER	1 2 3 4 5 6 7 NOMENCLATURE	UNITS PER ASSY.	USABLE ON CODE	S/C NO.
83-75	181-56158-5	. . PLATE, Arresting gear bumper fitting	1		
-76	181-56142-13	. FITTING, Arresting gear bumper	1		
-77	209-56151-5	FITTING ASSEMBLY, Arresting gear bumper support	1		
-78	209-56151-3	. FITTING, Arresting gear bumper support fitting assembly	1		
-79	4B19M-S8-011	. BUSHING, Press fit plain (NA) (89372)	4		
-80	MS15001-1	. FITTING, Lubrication	2		
-81	AN363-524	NUT	8		
-82	2W18-516	WASHER, Flat (NA) (89372)	10		
-83	2W18-516M	WASHER, Flat (NA) (89372)	4		
-84	AN5-7A	BOLT	8		
-85	S-1452-054	NUT, Self locking barrel (EN) (72962)	2		
-86	NAS143-5C	WASHER	2		
-87	NAS145-25C	BOLT	2		
-88	AN364-720C	NUT	2		
-89	NAS143-7	WASHER	4		
-90	NAS464P7A14	BOLT	2		
-91	209-31709	FRAME ASSEMBLY, Fuselage station 350.93 canted lower	1	BE	
	209-31709-51	FRAME ASSEMBLY, Fuselage station 350.930 canted lower	1	BF	
	209-31709-101	FRAME ASSEMBLY, Fuselage station 350.930 canted lower	1	FR	
-92	AN365-1032	. NUT (LH only)	1		
-93	2W18-10	. WASHER, Flat (NA) (89372) (left side only)	1		
-94	2W1AL12-14-16	. WASHER, Plain (NA) (89372) (left side only)	4		
-95	2W1AL12-14-64	. WASHER, Plain (NA) (89372) (left side only)	2		
-96	AN42-6A	. BOLT (left side only)	1		

NOTE: *181-56137-3 together with 181-56135, 181-56136, 181-56138-3, 181-56139 supersede 181-56159-7 for future procurement

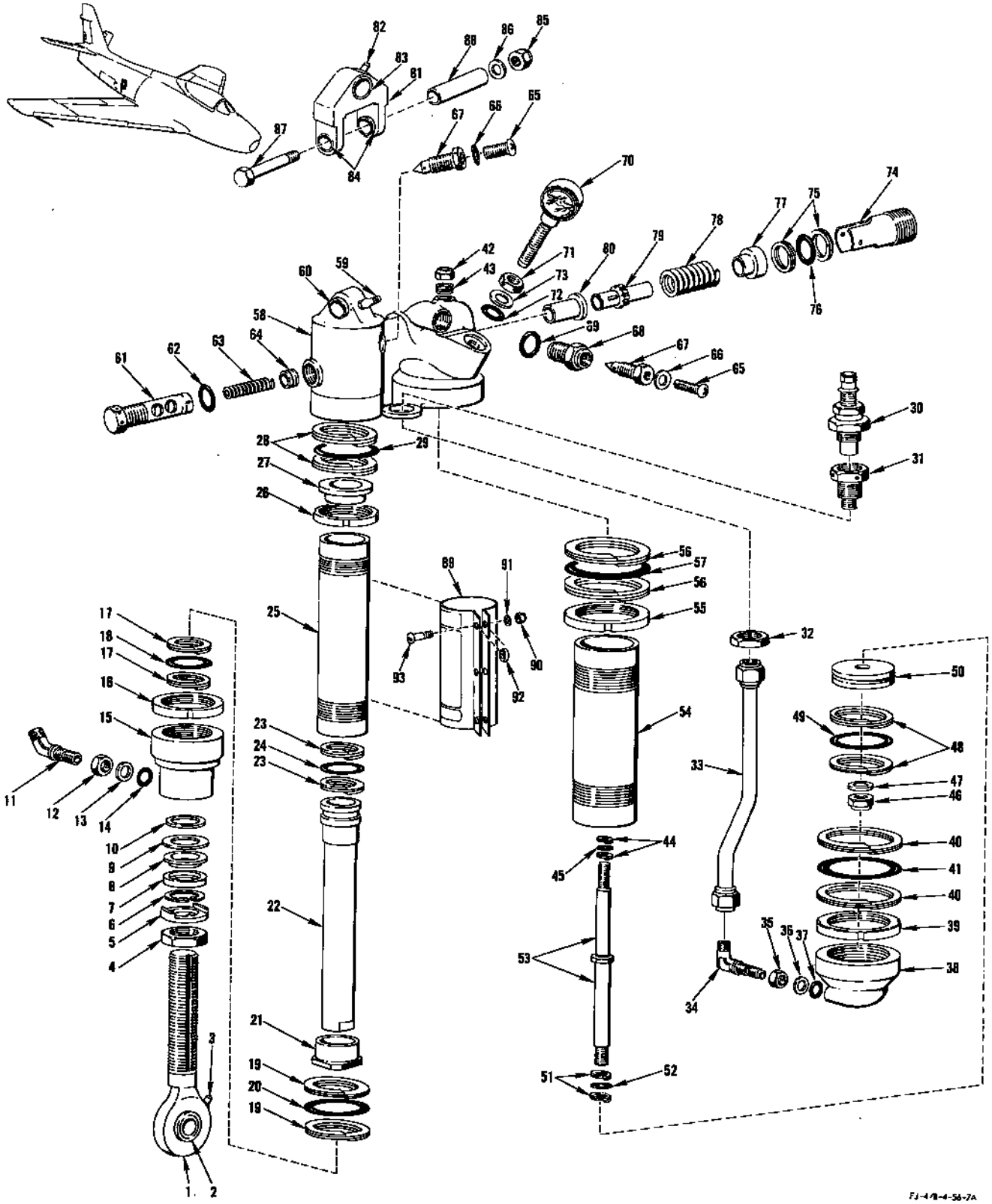

FIGURE 84 - SNUBBER ASSEMBLY

TOW TARGET RELEASE MECHANISM

FIGURE & INDEX NO.	PART NUMBER	1 2 3 4 5 6 7 NOMENCLATURE	UNITS PER ASSY.	USABLE ON CODE	S/C NO.
86	209-89852	PACKAGE, Tow target release mechanism	1	ET	
	209-89852-10	PACKAGE, Tow target release mechanism	1	FR	
-1	AN320-3	. NUT	1		
-2	2W18-10	. WASHER, Flat (NA) (89372)	2		
-3	AN3-5	. BOLT	1		
-4	AN320-3	. NUT	1		
-5	2W18-10	. WASHER, Flat (NA) (89372)	2		
-6	AN3-5	. BOLT	1		
-7	209-67751	. CABLE ASSEMBLY, Tow target release system forward	1		
	AN664C2	. . TERMINAL	2		
	RA2500-2	. . FORK (ACA) (01976)	2		
	209-67751-3	. . CABLE SUBASSEMBLY, Tow target release system forward	1		
-8	AN320-3	. NUT	1		
-9	2W18-10	. WASHER, Flat (NA) (89372)	2		
-10	AN3-5	. BOLT	1		
-11	AN365-428	. NUT	1		
-12	2W18-416	. WASHER, Flat (NA) (89372)	2		
-13	AN174-12A	. BOLT	1		
-14	209-67763	. BELLCRANK ASSEMBLY, Tow target release	1		
-15	209-67764	. SUPPORT ASSEMBLY, Tow target release bellcrank	1		
	NAS42DD4-40	. . SPACER	1		
-16	AN365-1032	. NUT	2		
-17	2W18-10	. WASHER, Flat (NA) (89372)	4		
-18	AN3-6A	. BOLT	2		
-19	209-67756	. SEAL, Tow target release system fume	1		
-20	209-67755	. RETAINER, Tow target release system seal	1		
-21	209-67765	. CABLE ASSEMBLY, Tow target release system aft intermediate	1		
	AN664C2	. . TERMINAL	1		
	AN669L2RH	. . TERMINAL	1		
	RA2500-2	. . FORK (ACA) (01976)	1		
-22	AN155-8L	. BARREL	1		
-23	209-67752	. CABLE ASSEMBLY, Tow target release system aft intermediate fuselage	1	ET	
	AN668-2	. . TERMINAL	1	ET	
	AN669L2LH	. . TERMINAL	1	ET	
	209-67752-3	. . CABLE SUBASSEMBLY, Tow target release system aft intermediate fuselage	1	ET	
-24	209-67711	. CABLE ASSEMBLY, Tow target release system aft intermediate fuselage	1	FR	
	AN668-2	. . TERMINAL	1	FR	
	AN669L2LH	. . TERMINAL	1	FR	
	209-67711-3	. . CABLE SUBASSEMBLY, Tow target release system aft intermediate fuselage	1	FR	
	209-67761	. BRACKET ASSEMBLY, Tow target release system fuselage station 351 pulley	1	ET	
-25	AN4-10A	. . BOLT	1	ET	
	2W18-416M	. . WASHER, Flat (NA) (89372)	2	ET	
	AN365-428	. . NUT	1	ET	
-26	AN219-4	. . PULLEY	1	ET	
-27	209-67761-11	. . BRACKET SUBASSEMBLY, Tow target release system fuselage station 351 pulley	1	ET	
-28	NAS427K9	. PIN	2	ET	
-29	AN365-1032	. NUT	2	ET	
-30	2W18-10L	. WASHER, Flat (NA) (89372)	4	ET	
-31	AN520-10R12	. SCREW	2	ET	
-32	209-67767	. RETAINER, Tow target release fuselage station 350.93 cable seal	1	ET	
-33	209-67766	. SEAL, Tow target release fuselage station 350.93 cable	1	ET	
	209-67762	. BRACKET ASSEMBLY, Tow target release fuselage station 358 pulley	1	ET	
-34	AN4-10A	. . BOLT	1	ET	
	2W18-416M	. . WASHER, Flat (NA) (89372)	2	ET	
	AN365-428	. . NUT	1	ET	
-35	AN219-4	. . PULLEY	1	ET	
-36	209-67762-9	. . BRACKET SUBASSEMBLY, Tow target release fuselage station 358 pulley	1	ET	
-37	NAS427K9	. PIN	2	ET	
	194-67713	. BRACKET ASSEMBLY, Tow target release fuselage station 347.906	1	FR	
-38	AN4-11A	. . BOLT	1	FR	
	2W18-416	. . WASHER, Flat (NA) (89372)	2	FR	
	AN365-428	. . NUT	1	FR	
-39	AN219-4A	. . PULLEY	1	FR	
-40	194-67713-3	. . BRACKET SUBASSEMBLY, Tow target release fuselage station 347.906	1	FR	
-41	NAS427K9	. PIN	2	FR	
-42	AN364-832	. NUT	2	FR	
-43	2W18-8	. WASHER, Flat (NA) (89372)	4	FR	
-44	AN515-8R10	. SCREW	2	FR	
-45	209-67715	. FAIRLEAD, Tow target release fuselage station 350.93 cable seal	1	FR	
-46	209-67714	. SEAL, Tow target release fuselage station 350.93 cable	1	FR	
	209-67712	. BRACKET, Tow target release fuselage station 357 pulley assembly of	1	FR	
-47	AN4-10A	. . BOLT	1	FR	
	2W18-418	. . WASHER, Flat (NA) (89372)	2	FR	
	AN365-428	. . NUT	1	FR	
-48	AN219A4	. . PULLEY	1	FR	
-49	209-67712-11	. . BRACKET SUBASSEMBLY, Tow target release fuselage station 357 pulley	1	FR	
-50	NAS427K9	. PIN	2	FR	

TOW TARGET RELEASE MECHANISM

FIGURE & INDEX NO.	PART NUMBER	1	2	3	4	5	6	7	NOMENCLATURE	UNITS PER ASSY.	USABLE ON CODE	S/C NO.
86	209-67710	.	BRACKET, Tow target release fuselage station 358.859 pulley assembly of -							1	FR	
-51	AN4-11A	.	.	BOLT						1	FR	
	2W18-416	.	.	WASHER, Flat (NA) (89372)						2	FR	
	AN365-428	.	.	NUT						1	FR	
-52	AN219A4	.	.	PULLEY						1	FR	
-53	209-67710-9	.	.	BRACKET SUBASSEMBLY, Tow target release fuselage station 358.859 pulley						1	FR	
-54	NAS427K9	.	PIN							2	FR	
-55	AN320-3	.	NUT							1		
-56	2W18-10L	.	WASHER, Flat (NA) (89372)							2		
-57	2W18-10	.	WASHER, Flat (NA) (89372)							2		
-58	AN23-13	.	BOLT							1		
-59	AN320-3	.	NUT							1		
-60	2W18-10	.	WASHER, Flat (NA) (89372)							2		
-61	AN23-14	.	BOLT							1		
-62	194-67713	.	SLIDE ASSEMBLY, Tow target release fuselage station 378							1		
	NAS42DD4-16	.	.	SPACER						1		
	194-67713-5	.	.	SLIDE SUBASSEMBLY, Tow target release fuselage station 378						2		
-63	209-67716	.	SPRING, Tension							1		
-64	AN365-1032	.	NUT							1		
-65	2W18-10L	.	WASHER, Flat (NA) (89372)							2		
-66	AN42-3A	.	BOLT							1		
-67	AN509-10R11	.	SCREW							6		
-68	181-67002-10	.	MECHANISM ASSEMBLY, Tow target release (supersedes 181-67002 for future procurement)							1		
	106TTR	.	.	MECHANISM ASSEMBLY (HBDI) (98138)						1		
-69	3600-2-02	.	.	NUT, Anchor (NUS) (80539)						6		
	209-58846-27	.	LINE ASSEMBLY, Utility system pressure tee in valve assembly station 301 to union in servo valve (see speed brake system)							1	FR	
	209-58846-29	.	LINE ASSEMBLY, Speed brake open servo valve to elbow station 331.5 (see speed brake system)							1	FR	

ELEVATOR ASSEMBLY

FIGURE & INDEX NO.	PART NUMBER	1 2 3 4 5 6 7 NOMENCLATURE	UNITS PER ASSY.	USABLE ON CODE	S/C NO.
87	209-22002-12	ELEVATOR ASSEMBLY, Complete RH (see figure 89 for next assembly)	1	ET	
	209-22002-11	ELEVATOR ASSEMBLY, Complete LH (see figure 89 for next assembly)	1	ET	
	209-22002-22	ELEVATOR ASSEMBLY, Complete RH (see figure 89 for next assembly) (supersedes 209-22002-32 for future procurement)	1	FR	
	209-22002-21	ELEVATOR ASSEMBLY, Complete LH (see figure 89 for next assembly) (supersedes 209-22002-31 for future procurement)	1	FR	
	209-22002-32	ELEVATOR ASSEMBLY, Complete RH (see figure 89 for next assembly) (superseded by 209-22002-22 for future procurement)	1	KU	442
	209-22002-31	ELEVATOR ASSEMBLY, Complete LH (see figure 89 for next assembly) (superseded by 209-22002-21 for future procurement)	1	KU	442
-1	209-22402-6	. TUBE ASSEMBLY, Elevator torque RH	1	ET	
	209-22402-5	. TUBE ASSEMBLY, Elevator torque LH	1	ET	
	209-22402-12	. TUBE ASSEMBLY, Elevator torque RH	1	FR	
	209-22402-11	. TUBE ASSEMBLY, Elevator torque LH	1	FR	
-2	209-22414	. . STUD, Elevator torque tube rotation	1		
	AN365-624	. . NUT	1		
	2W1AL26-22-32	. . WASHER, Plain (NA) (89372)	1		
-3	4B20S8-014	. . BUSHING, Press fit flanged (NA) (89372)	2	ET	
	209-522364-3	. . BUSHING, Elevator control linkage close tolerance flange	2	FR	
-4	209-22405-2	. FITTING ASSEMBLY, Elevator station 36 hinge RH	1		
	209-22405-1	. FITTING ASSEMBLY, Elevator station 36 hinge LH	1		
	4B20M-S5-005	. . BUSHING, Press fit flanged (NA) (89372)	2		
	NAS463B-DD10	. SHIM	1		
-5	209-22406-2	. FITTING ASSEMBLY, Elevator station 65 hinge RH	1		
	209-22406-1	. FITTING ASSEMBLY, Elevator station 65 hinge LH	1		
	4B20M-S5-005	. . BUSHING, Press fit flanged (NA) (89372)	2		
-6	209-22407-2	. LINK ASSEMBLY, Elevator station 36 elevator to horizontal stabilizer RH	1		
	209-22407-1	. LINK ASSEMBLY, Elevator station 36 elevator to horizontal stabilizer LH	1		
	AN206DSP5	. . BEARING	1		
-7	209-22408	. LINK ASSEMBLY, Elevator station 65 elevator to horizontal stabilizer	1		
	AN206DSP5	. . BEARING	1		
-8	209-22068-2	. NOSE ASSEMBLY, Elevator outboard RH	1		
	209-22068-1	. NOSE ASSEMBLY, Elevator outboard LH	1		
	ATTACHING PARTS				
	AN509-416R13	. SCREW (lower side only)	1		
	22A17A-048	. NUT, Anchor (EN) (72962) (lower side only)	1		
	---*---				
-9	209-22314-2	. NOSE ASSEMBLY, Elevator inboard RH	1		
	209-22314-1	. NOSE ASSEMBLY, Elevator inboard LH	1		
	ATTACHING PARTS				
-10	AN509-416R13	. SCREW	3		
	22NA17A-048	. NUT, Anchor (EN) (72962)	3		
-11	AN509-10R10	. SCREW	11		
	3600-02	. NUT, Anchor (NUS) (80539)	10		
	3610-02	. NUT, Anchor (NUS) (80539)	1		
-12	AN509-10R10	. SCREW	1		
	3600-02	. NUT, Anchor (NUS) (80539)	1		
	NAS463B-DD10	. SHIM	1		
	---*---				
-13	209-22314-4	. . CHANNEL, Elevator inboard nose assembly RH	1		
	209-22314-3	. . CHANNEL, Elevator inboard nose assembly LH	1		
-14	209-22313-2	. . WEIGHT ASSEMBLY, Elevator balance inboard RH	1		
	209-22313-1	. . WEIGHT ASSEMBLY, Elevator balance inboard LH	1		
-15	3591-4CNx-3/8	. . . INSERT, Heli-coil (AF) (91767)	3		
-16	NAS222-8	. . SCREW	3		
-17	2W18-416M	. . WASHER, Flat (NA) (89372)	3		
-18	209-22415	. PIN ASSEMBLY, Elevator hinge	1		523
	ATTACHING PARTS				
-19	NAS221-9	. SCREW	1		
-20	2W18-10M	---*--- WASHER, Flat (NA) (89372)	1		
-21	NAS557-6B	. GROMMET, Split plastic (NA) (89372)	1		
-22	NAS557-6	. GROMMET, Split plastic (NA) (89372) (added by Service Change No. 523)	1		
-23	F200-3	. JO-BOLT (NSC) (76689) (lower side only)	21		
-24	AN509-10-13	. SCREW	6		
	AN365-1032	. NUT	6		
	2W18-10	. WASHER, Flat (NA) (89372)	6		
-25	AN509-416-14	. SCREW	4		
	AN365-428	. NUT	4		
	2W18-416	. WASHER, Flat (NA) (89372)	4		
-26	F260-5	. JO-BOLT (NSC) (76689)	4		
-27	AN509-416-14	. SCREW (upper side only)	2		
	AN365-428	. NUT (upper side only)	2		
	2W18-416	. WASHER, Flat (NA) (89372) (upper side only)	2		
	209-22304-102	. SKIN ASSEMBLY, Elevator RH	1	KN	
	209-22304-101	. SKIN ASSEMBLY, Elevator LH	1	KN	
	209-22304-202	. SKIN ASSEMBLY, Elevator RH	1	KP	
	209-22304-201	. SKIN ASSEMBLY, Elevator LH	1	KP	
-28	209-22304-5	. . ROVING STRAND, Elevator glass fiber skin assembly	1		
-29	209-22304-3	. . GLASS FABRIC, Elevator skin assembly	1		
	209-22304-2	. . SKIN ASSEMBLY, Elevator flat pattern honeycomb RH (make from 209-22303-12)	1	KN	
	209-22304-1	. . SKIN ASSEMBLY, Elevator flat pattern honeycomb LH (make from 209-22303-11)	1	KN	

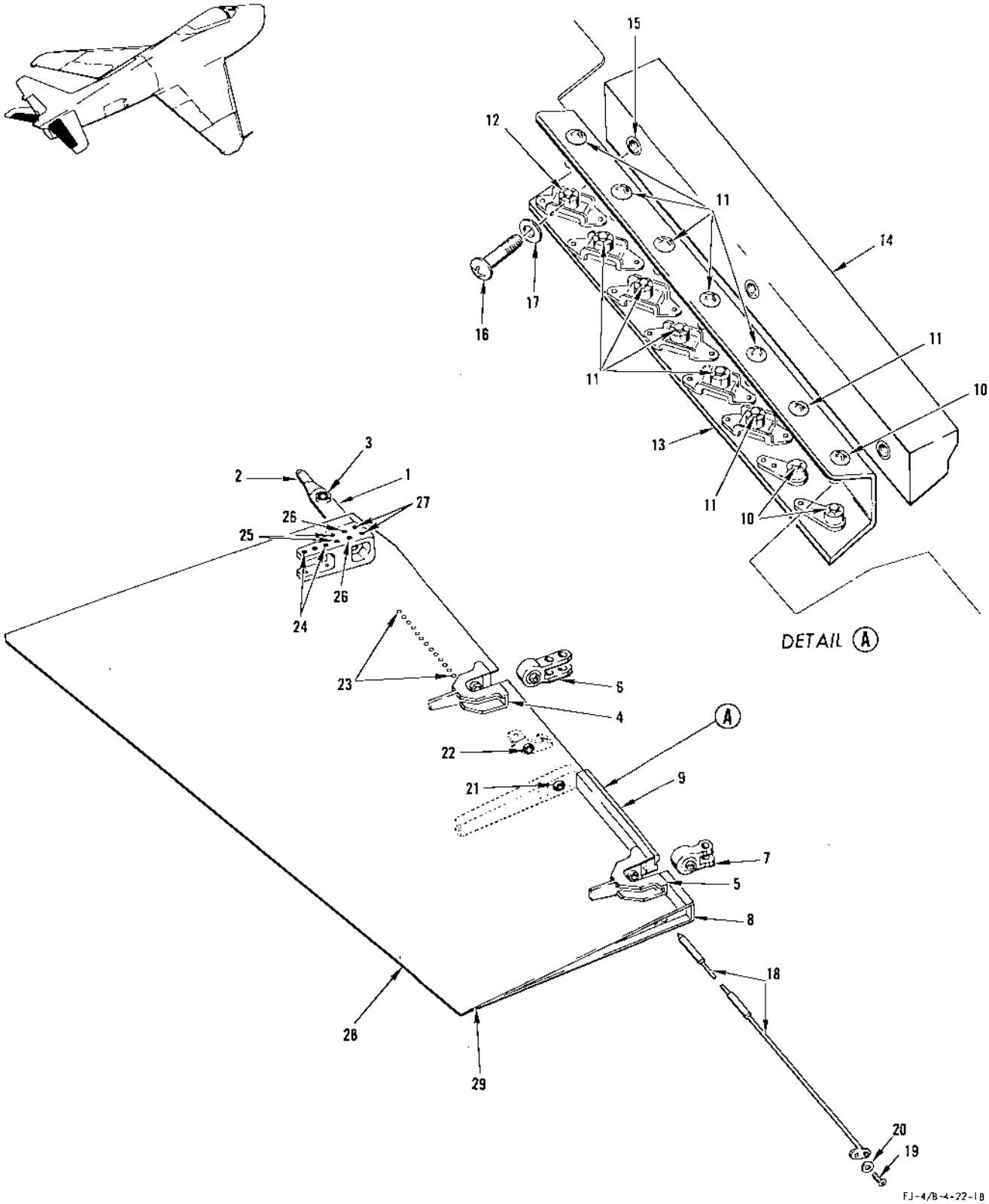

FIGURE 87 - ELEVATOR ASSEMBLY

ELEVATOR ASSEMBLY

FIGURE & INDEX NO.	PART NUMBER	1	2	3	4	5	6	7	NOMENCLATURE	UNITS PER ASSY.	USABLE ON CODE	S/C NO.
87	209-22304-8	.	.						SKIN ASSEMBLY, Elevator flat pattern honeycomb RH (make from 209-22303-102)	1	KP	
	209-22304-7	.	.						SKIN ASSEMBLY, Elevator flat pattern honeycomb LH (make from 209-22303-101)	1	KP	

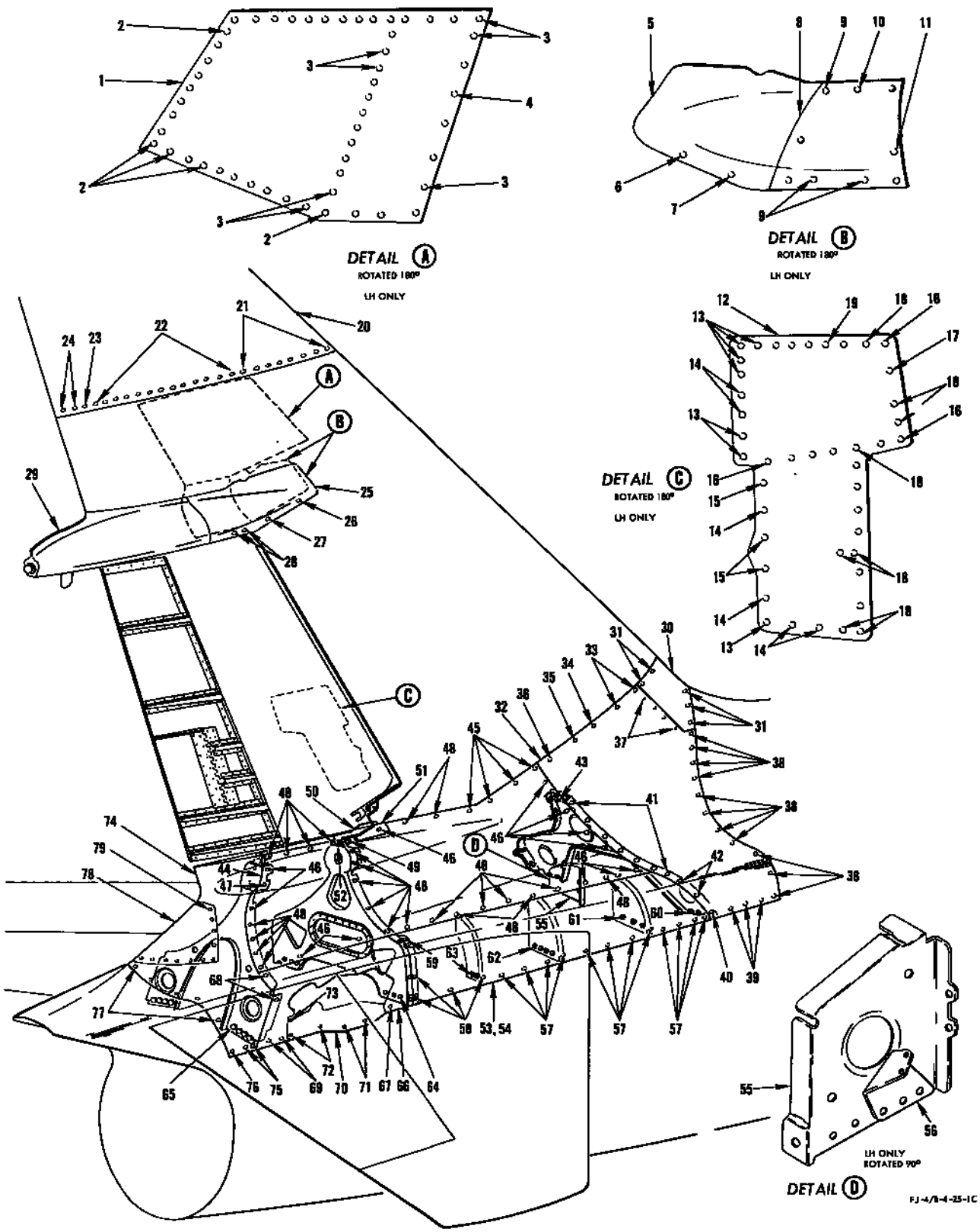

FIGURE 88 - FAIRING AND ACCESS DOORS

FAIRING AND ACCESS DOORS

FIGURE & INDEX NO.	PART NUMBER	1 2 3 4 5 6 7 NOMENCLATURE	UNITS PER ASSY.	USABLE ON CODE	S/C NO.
88-1	209-23384	DOOR, Vertical stabilizer antenna access (LH only)	1		
-2	AN509-10R12	SCREW	5		
	2720-02	NUT, Anchor (NUS) (80539)	5		
-3	AN509-10R12	SCREW	7		
	3610-02	NUT, Anchor (NUS) (80539)	7		
-4	AN509-10R12	SCREW	41		
	3600-02	NUT, Anchor (NUS) (80539)	41		
-5	209-23351-11	FAIRING ASSEMBLY, Vertical stabilizer vent tube forward LH	1		
-6	AN509-10R10	SCREW	1		
	3600-2-02	NUT, Anchor (NUS) (80539)	1		
-7	AN509-10R10	SCREW	1		
	3610-02	NUT, Anchor (NUS) (80539)	1		
-8	209-23378-11	FAIRING ASSEMBLY, Vertical stabilizer vent tube LH removable	1		
-9	AN509-10R11	SCREW	3		
	3610-02	NUT, Anchor (NUS) (80539)	3		
-10	AN509-10R11	SCREW	1		
	MK1000-1032	NUT, Anchor (KNM) (75237)	1		
-11	AN509-10R11	SCREW	5		
	3600-02	NUT, Anchor (NUS) (80539)	5		
-12	209-24104	DOOR, Rudder trim tab actuator and damper access	1		
-13	AN509-10R9	SCREW	7		
	22A5-02	NUT, Anchor (EN) (72962)	7	KN	
	22NA5-02	NUT, Anchor (EN) (72962)	7	KP	
-14	AN509-10R9	SCREW	6		
	3600-02	NUT, Anchor (NUS) (80539)	6		
-15	AN509-10R9	SCREW	3		
	22A24-02	NUT, Anchor (EN) (72962)	3	KN	
	22NA24-02	NUT, Anchor (EN) (72962)	3	KP	
-16	AN509-10R9	SCREW	3		
	22A17-02	NUT, Anchor (EN) (72962)	3	KN	
	22NA17A-02	NUT, Anchor (EN) (72962)	3	KP	
-17	AN509-10R9	SCREW	1		
	K1100-1032	NUT, Anchor (KNM) (75237)	1		
-18	AN509-10R9	SCREW	8		
	22A35-02	NUT, Anchor (EN) (72962)	8	KN	
	22NA35-02	NUT, Anchor (EN) (72962)	8	KP	
-19	AN509-10R9	SCREW	15		
	22A38-02	NUT	15	KN	
	22NA38-02	NUT	15	KP	
-20	209-23325	TIP ASSEMBLY, Vertical stabilizer splitter fairing plastic	1		
-21	AN509-10R11	SCREW	8		
	3600-02	NUT, Anchor (NUS) (80539)	8		
-22	AN509-10R11	SCREW	13		
	22A5-02	NUT, Anchor (EN) (72962)	13		
-23	AN509-10R11	SCREW	1		
	NAS463W-DD10	SHIM (LH only)	1		
	3600-02	NUT, Anchor (NUS) (80539) (LH only)	1		
	22A5-02	NUT, Anchor (EN) (72962) (RH only)	1		
-24	AN509-10R11	SCREW	2		
	NAS463W-DD10	SHIM	2		
	3600-02	NUT, Anchor (NUS) (80539)	2		
-25	209-23351-2	FAIRING ASSEMBLY, Vertical stabilizer vent tube forward RH	1		
-26	AN509-10R10	SCREW	1		
	3600-2-02	NUT, Anchor (NUS) (80539)	1		
-27	AN509-10R10	SCREW	1		
	3610-02	NUT, Anchor (NUS) (80539)	1		
-28	AN509-10R11	SCREW	2		
	2W18-10	WASHER, Flat (NA) (89372)	2		
	AN365-1032	NUT	2		
-29	209-23352-2	FAIRING, Vertical stabilizer vent tube aft RH	1		
	209-23352-1	FAIRING, Vertical stabilizer vent tube aft LH	1		
-30	209-25010	PANEL ASSEMBLY, Vertical stabilizer leading edge to dorsal fin	1		
-31	SP1561-1032SS8	SCREW ASSEMBLY (SH) (78189)	5		
	3600-2-02	NUT, Anchor (NUS) (80539)	5		
	NAS463B-DD10	SHIM (use on forward edge only)	3		
-32	209-25002-2	PANEL ASSEMBLY, Empennage fillet forward RH	1		
	209-25002-1	PANEL ASSEMBLY, Empennage fillet forward LH	1		
-33	SP1561-1032SS8	SCREW ASSEMBLY (SH) (78189)	2		
	3600-2-02	NUT, Anchor (NUS) (80539)	2		
-34	SP1561-1032SS8	SCREW ASSEMBLY (SH) (78189)	1		
	3610-02	NUT, Anchor (NUS) (80539)	1		
-35	AN507-428R8	SCREW	1		
	A3475-020-24A	WASHER (TIN) (78553)	1		
	3610-048	NUT, Anchor (NUS) (80539)	1		
-36	SP1561-1032SS8	SCREW ASSEMBLY (SH) (78189)	1		
	3600-2-02	NUT, Anchor (NUS) (80539)	1		
-37	SP1561-1032SS8	SCREW ASSEMBLY (SH) (78189)	4		
	URF5	RECEPTACLE (DZ) (72794)	4		
	URF5-3	SPACER (DZ) (72794)	8		
-38	SP1561-1032SS8	SCREW ASSEMBLY (SH) (78189)	11		
	3600-2-02	NUT, Anchor (NUS) (80539)	11		
	NAS463B-DD10	SHIM	11		
	3600-2-02	NUT, Anchor (NUS) (80539)	11		

FAIRING AND ACCESS DOORS

FIGURE & INDEX NO.	PART NUMBER	1 2 3 4 5 6 7 NOMENCLATURE	UNITS PER ASSY.	USABLE ON CODE	S/C NO.
88-39	SP1561-1032SS8	SCREW ASSEMBLY (SH) (78189)	3		
	3600-02	NUT, Anchor (NUS) (80539)	3		
-40	SP1561-1032SS8	SCREW ASSEMBLY (SH) (78189)	1		
	3600-2-02	NUT, Anchor (NUS) (80539)	1		
-41	SP1561-1032SS8	SCREW ASSEMBLY (SH) (78189)	7		
	3600-2-02	NUT, Anchor (NUS) (80539)	7		
-42	SP1561-1032SS8	SCREW ASSEMBLY (SH) (78189)	2		
	3610-02	NUT, Anchor (NUS) (80539)	2		
-43	AN3-5A	BOLT	4		
	2W18-10M	WASHER, Flat (NA) (89372)	4		
	NAS463W-DD10	SHIM	4		
	3600-2-02	NUT, Anchor (NUS) (80539)	4		
-44	209-25003-2	PANEL ASSEMBLY, Empennage fillet aft RH	1	ET	
	209-25003-102	PANEL ASSEMBLY, Empennage fillet aft RH	1	FR	
	209-25003-1	PANEL ASSEMBLY, Empennage fillet aft LH	1	ET	
	209-25003-101	PANEL ASSEMBLY, Empennage fillet aft LH	1	FR	
-45	UF5T30	STUD (DZ) (72794)	4		
	URF5	RECEPTACLE (DZ) (72794)	4		
	URF5-3	SPACER (DZ) (72794)	8		
-46	UF5T10	STUD (DZ) (72794)	16		
	URF5	RECEPTACLE (DZ) (72794)	16		
	URF5-3	SPACER (DZ) (72794)	32		
-47	UF5T10	STUD (DZ) (72794)	1	ET	
	URF5	RECEPTACLE (DZ) (72794)	1	ET	
	URF5-3	SPACER (DZ) (72794)	2	ET	
-48	UF5T20	STUD (DZ) (72794)	19		
	URF5	RECEPTACLE (DZ) (72794)	19		
	URF5-3	SPACER (DZ) (72794)	19		
-49	AN509-10R11	SCREW	2		
	3600-2-02	NUT, Anchor (NUS) (80539)	2		
-50	209-25014-2	RIB ASSEMBLY, Empennage fillet frame to vertical stabilizer RH	1		
	209-25014-1	RIB ASSEMBLY, Empennage fillet frame to vertical stabilizer LH	1		
-51	NAS221-10	SCREW	2		
	2W18-10L	WASHER, Flat (NA) (89372) (use under screw head)	2		
	2W18-10	WASHER, Flat (NA) (89372) (use under nut)	4		
	AN365-1032	NUT	2		
-52	AN3-4A	BOLT (install two aft and one forward)	3		
	AN3-5A	BOLT (use in center hole)	1		
	2W18-10L	WASHER, Flat (NA) (89372) (use forward and aft under nut)	3		
	2W18-416M	WASHER, Flat (NA) (89372) (use in center under nut)	1		
	3600-2-02	NUT, Anchor (NUS) (80539)	4		
-53	209-25004-2	FAIRING ASSEMBLY, Horizontal stabilizer stub fillet forward RH	1		
	209-25004-1	FAIRING ASSEMBLY, Horizontal stabilizer stub fillet forward LH	1	ET	
-54	209-25004-11	FAIRING ASSEMBLY, Horizontal stabilizer stub fillet forward LH	1	FR	
-55	209-25022-21	. FRAME ASSEMBLY, Empennage fillet fuse station 366. 354 LH	1	FR	
-56	209-58659	. . BRACKET, Hydraulic rudder boost control valve support	1	FR	
-57	SP1561-1032SS8	SCREW ASSEMBLY (SH) (78189)	12		
	3600-02	NUT, Anchor (NUS) (80539)	12		
-58	SP1561-1032SS8	SCREW ASSEMBLY (SH) (78189)	6		
	3600-2-02	NUT, Anchor (NUS) (80539)	6		
-59	SP1561-1032SS8	SCREW ASSEMBLY (SH) (78189)	2		
	3610-02	NUT, Anchor (NUS) (80539)	2		
-60	AN3-4A	BOLT	3		
	2W18-10	WASHER, Flat (NA) (89372)	3		
	NAS463B-DD10	SHIM	3		
	3600-2-02	NUT, Anchor (NUS) (80539)	3		
-61	AN365-1032	NUT	3		
	2W18-10	WASHER, Flat (NA) (89372)	6		
	AN3-5A	BOLT	3		
-62	AN365-1032	NUT	4		
	2W18-10	WASHER, Flat (NA) (89372) (use one under each nut)	4		
	2W18-10M	WASHER, Flat (NA) (89372) (use one under each bolt)	4		
	AN3-4A	BOLT	4		
-63	AN365-1032	NUT	2		
	2W18-10	WASHER, Flat (NA) (89372) (use one under each nut)	2		
	2W18-10M	WASHER, Flat (NA) (89372) (use one under each bolt)	2		
	AN3-4A	BOLT	2		
-64	AN3-5A	BOLT	3		
	2W18-10	WASHER, Flat (NA) (89372) (use two under each nut and one under each bolt)	9		
	AN365-1032	NUT	3		
-65	AN3-4A	BOLT	4		
	2W18-10M	WASHER, Flat (NA) (89372)	4		
	3600-2-02	NUT, Anchor (NUS) (80539) (install behind outboard hole)	3	ET	
	3600-02	NUT, Anchor (NUS) (80539) (install behind outboard hole)	3	FR	
	NAS463W-DD10	SHIM (use with 3600-2-02 and 3600-02)	3		
	NAS463T-DD10	SHIM (use with 3610-02)	1		
	3610-02	NUT, Anchor (NUS) (80539) (use behind inboard hole)	1		
-66	209-25006-2	FAIRING ASSEMBLY, Horizontal stabilizer stub fillet aft RH	1		
	209-25006-1	FAIRING ASSEMBLY, Horizontal stabilizer stub fillet aft LH	1		
-67	SP1561-1032SS8	SCREW ASSEMBLY (SH) (78189)	1		
	3600-02	NUT, Anchor (NUS) (80539)	1		
-68	SP1561-1032SS8	SCREW ASSEMBLY (SH) (78189)	2		
	3600-2-02	NUT, Anchor (NUS) (80539)	2		

FAIRING AND ACCESS DOORS

FIGURE & INDEX NO.	PART NUMBER	1 2 3 4 5 6 7 NOMENCLATURE		UNITS PER ASSY.	USABLE ON CODE
88-69	SP1561-1032SS8	SCREW ASSEMBLY (SH) (78189)	2		
	3600-2-02BC100	NUT, Anchor (NUS) (80539)	2		
-70	209-25011-2	PANEL, Horizontal stabilizer rotation fitting access RH	1		
	209-25011-1	PANEL, Horizontal stabilizer rotation fitting access LH	1		
-71	SP1561-1032SS8	SCREW ASSEMBLY (SH) (78189)	2		
	3600-2-02	NUT, Anchor (NUS) (80539)	2		
-72	SP1561-1032SS8	SCREW ASSEMBLY (SH) (78189)	2		
	3600-2-02BC100	NUT, Anchor (NUS) (80539)	2		
-73	SP1561-1032SS8	SCREW ASSEMBLY (SH) (78189)	1		
	NAS463B-DD10	SHIM	1		
	3600-02	NUT, Anchor (NUS) (80539)	1		
-74	209-25005	FAIRING ASSEMBLY, Elevator and rudder cone	1	ET	
	209-25007-21	FAIRING ASSEMBLY, Elevator and rudder cone radar	1	FR	
-75	SP1561-1032SS8	SCREW ASSEMBLY (SH) (78189)	2		
	3600-2-02BC100	NUT, Anchor (NUS) (80539)	2		
-76	SP1561-1032SS8	SCREW ASSEMBLY (SH) (78189)	1		
	3600-2-02	NUT, Anchor (NUS) (80539)	1		
-77	SP1561-1032SS8	SCREW ASSEMBLY (SH) (78189)	5		
	3600-2-02BC100	NUT, Anchor (NUS) (80539)	5		
-78	209-71622-7	COVER, L-Band recessed stub APX-6 antenna assembly	1	FR	
-79	AN507-1032R8	SCREW	11	FR	
	3600-02	NUT, Anchor (NUS) (80539)	11	FR	

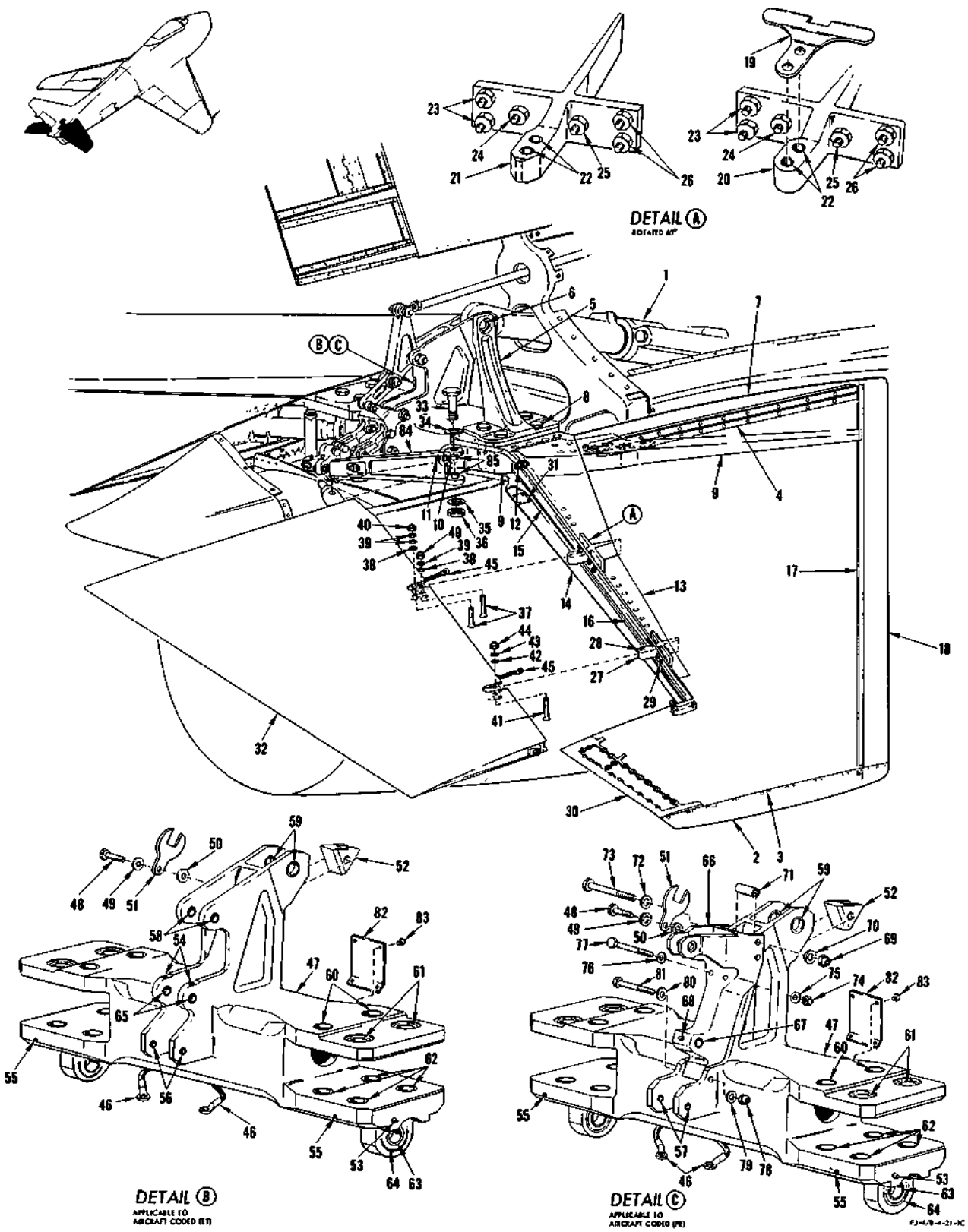

FIGURE 89 - HORIZONTAL STABILIZER ASSEMBLY

HORIZONTAL STABILIZER ASSEMBLY

FIGURE & INDEX NO.	PART NUMBER	1 2 3 4 5 6 7 NOMENCLATURE	UNITS PER ASSY.	USABLE ON CODE	S/C NO.
89-1	209-52218	BUNGEE ASSEMBLY, Horiz stab control feel (see Surface and Secondary Controls)	1		
	209-21003	STABILIZER ASSEMBLY, Horizontal complete	1	PD	
	209-21003-11	STABILIZER ASSEMBLY, Horizontal complete	1	FR	
	209-21003-31	STABILIZER ASSEMBLY, Horizontal complete	1	PC	
-2	209-21312-12	. TIP, Horizontal stabilizer RH	1	PD	465
	209-21312-11	. TIP, Horizontal stabilizer LH	1	PD	465
	209-21306-2	. TIP, Horizontal stabilizer station 81.164 canted RH	1		
	209-21306-1	. TIP, Horizontal stabilizer station 81.164 canted LH	1		
-3	AN509-10R8	. SCREW	22	PD	
	3600-02	. NUT, Anchor (EN) (72962)	22		
	AN509-10R8	. SCREW	26	PB	
	3600-02	. NUT, Anchor (EN) (72962)	26		
-4	209-21319	. SEAL ASSEMBLY, Horizontal stabilizer root rib	1		
	ATTACHING PARTS				
	2W18-10M	. WASHER, Flat (NA) (89372)	16		
	NAS221-9	. SCREW	16		
	3600-02	. NUT, Anchor (EN) (72962)	16		
	---*---				
-5	209-21011-4	. BRACE, Horizontal stabilizer log fitting RH	1		
	209-21011-3	. BRACE, Horizontal stabilizer log fitting LH	1		
-6	MS20014-48	. BOLT	1		
	2W10-14	. WASHER, Countersunk (NA) (89372) (use under bolthead)	1		
	2W1AL57-46-63	. WASHER, Plain (NA) (89372) (use under nut)	1		
	EB-144	. NUT (EN) (72962)	1		
-7	209-21004-2	. STABILIZER ASSEMBLY, Horizontal RH	1	PD	465
	209-21004-1	. STABILIZER ASSEMBLY, Horizontal LH	1	PD	465
	209-21004-102	. STABILIZER ASSEMBLY, Horizontal RH	1		465
	209-21004-101	. STABILIZER ASSEMBLY, Horizontal LH	1		465
	ATTACHING PARTS				
-8	209-21409	. BOLT, Horizontal stabilizer to center section outboard attaching	4		
	NAS143-12C	. WASHER (use under bolthead)	4		
	187-21417	. WASHER, Horizontal stabilizer center section lower outboard (use under nut)	4		
	EB-098	. NUT (EN) (72962)	4		
	---*---				
-9	209-21412-11	. . RIB ASSEMBLY, Horizontal stabilizer station 11.062	1		
-10	HSBG-8SA	. . . BEARING (HLF) (97613)	1		
-11	MS15001-1	. . . FITTING, Lubrication	1		
-12	NAS464-7A10	. . BOLT	1		
	2W18-716	. . WASHER, Flat (NA) (89372)	1		
	AN364-720	. . NUT	1		
	6800-070	. . BOLT, Retainer (NUS) (80539)	1		
-13	209-21402-2	. . CAP, Horizontal stabilizer main beam upper RH	1		
	209-21402-1	. . CAP, Horizontal stabilizer main beam upper LH	1		
-14	209-21403-2	. . CAP, Horizontal stabilizer main beam lower RH	1		
	209-21403-1	. . CAP, Horizontal stabilizer main beam lower LH	1		
-15	209-21302-2	. . BEAM, Horizontal stabilizer main RH	1		
	209-21302-1	. . BEAM, Horizontal stabilizer main LH	1		
	4B19S12-118	. . BUSHING, Press fit plain (NA) (89372)	8		
-16	209-21305-4	. . BEAM ASSEMBLY, Horizontal stabilizer station 36 to station 99 RH	1	PD	
	209-21305-6	. . BEAM ASSEMBLY, Horizontal stabilizer station 36 to station 99 RH	1	PB	
	209-21305-3	. . BEAM ASSEMBLY, Horizontal stabilizer station 36 to station 99 LH	1	PD	
	209-21305-5	. . BEAM ASSEMBLY, Horizontal stabilizer station 36 to station 99 LH	1	PB	
-17	209-21303	. . BEAM, Horizontal stabilizer front	1	PD	
	209-21303-3	. . BEAM, Horizontal stabilizer front	1	PB	
-18	209-21413-12	. . SKIN ASSEMBLY, Horizontal stabilizer leading edge RH	1	PD	
	209-21413-11	. . SKIN ASSEMBLY, Horizontal stabilizer leading edge LH	1	PD	
	209-21413-32	. . SKIN ASSEMBLY, Horizontal stabilizer leading edge RH	1	PB	
	209-21413-31	. . SKIN ASSEMBLY, Horizontal stabilizer leading edge LH	1	PB	
	209-21038-2	. . RIB ASSEMBLY, Horizontal stabilizer station 36 RH	1		
	209-21038-1	. . RIB ASSEMBLY, Horizontal stabilizer station 36 LH	1		
-19	209-21424-2	. . . STRAP, Elevator hinge - tension, station 36.000 RH (used with 209-21405-2 fitting only) (see 209-921008-2 for next assy)	1		
	209-21424-1	. . . STRAP, Elevator hinge - tension, station 36,000 LH (used with 209-21405-1 fitting only) (see 209-921008-1 for next assy)	1		
-20	209-21405-2	. . . FITTING ASSEMBLY, Horizontal stabilizer station 36 hinge RH (superseded by 209-21422-12 for future procurement)	1		
	209-21405-1	. . . FITTING ASSEMBLY, Horizontal stabilizer station 36 hinge LH (superseded by 209-21422-11 for future procurement)	1		
-21	209-21422-12	. . . FITTING ASSEMBLY, Horizontal stabilizer station 36 RH (supersedes 209-21405-2 for future procurement)	1		
	209-21422-11	. . . FITTING ASSEMBLY, Horizontal stabilizer station 36 LH (supersedes 209-21405-1 for future procurement)	1		
-22	4B19S4-105	. . . . BUSHING, Press fit plain (NA) (89372)	2		
-23	NAS464-5A9	. . . . BOLT	2		
	6800-054	. . . . BOLT, Retainer (NUS) (80539)	2		
	2W18-516	. . . . WASHER, Flat (NA) (89372)	4		
	AN364-524	. . . . NUT	2		
-24	NAS464-5A9	. . . . BOLT	1		
	6800-064	. . . . BOLT, Retainer (NUS) (80539)	1		
	2W18-616	. . . . WASHER, Flat (NA) (89372)	2		
	AN364-624	. . . . NUT	1		
-25	NAS464-6A8	. . . . BOLT	1		
	6800-064	. . . . BOLT, Retainer (NUS) (80539)	1		
	2W18-616	. . . . WASHER, Flat (NA) (89372)	2		

HORIZONTAL STABILIZER ASSEMBLY

FIGURE & INDEX NO.	PART NUMBER	1	2	3	4	5	6	7	NOMENCLATURE	UNITS PER ASSY.	USABLE ON CODE	S/C NO.
89	AN364-624	.	.	.	.				NUT	1		
-26	NAS464-5A8	.	.	.	.				BOLT	2		
	6800-054	.	.	.	.				BOLT, Retainer (NUS) (80539)	1		
	2W18-516	.	.	.	.				WASHER, Flat (NA) (89372)	4		
	AN364-524	.	.	.	.				NUT	2		
	209-21067-2	.	.						RIB ASSEMBLY, Horizontal stabilizer station 65 RH	1		
	209-21067-1	.	.						RIB ASSEMBLY, Horizontal stabilizer station 65 LH	1		
-27	209-21406-2	.	.	.					FITTING ASSEMBLY, Horizontal stabilizer station 65 RH (superseded by 209-21423-12 for future procurement)	1		
	209-21406-1	.	.	.					FITTING ASSEMBLY, Horizontal stabilizer station 65 LH (superseded by 209-21423-11 for future procurement)	1		
	209-21423-12	.	.	.					FITTING ASSEMBLY, Horizontal stabilizer station 65 RH (supersedes 209-21406-2 for future procurement)	1		
	209-21423-11	.	.	.					FITTING ASSEMBLY, Horizontal stabilizer station 65 LH (supersedes 209-21406-1 for future procurement)	1		
-28	4B19S6-030	.	.	.	.				BUSHING, Press fit plain (NA) (89372)	1		
-29	AN6-10A	.	.	.	.				BOLT	4		
	6800-064	.	.	.	.				BOLT, Retainer (NUS) (80539)	4		
	2W18-616	.	.	.	.				WASHER, Flat (NA) (89372)	4		
	AN365-624	.	.	.	.				NUT	4		
-30	209-21421	.	.						BEAM, Horizontal stabilizer trailing edge	1	PD	
	209-21421-3	.	.						BEAM, Horizontal stabilizer trailing edge	1	PB	
-31	AN7510-1	.	.						PLATE	1		
-32	209-22002-12	.							ELEVATOR ASSEMBLY, Complete RH (see figure 87 for breakdown)	1	ET	442
	209-22002-11	.							ELEVATOR ASSEMBLY, Complete LH (see figure 87 for breakdown)	1	ET	442
	209-22002-22	.							ELEVATOR ASSEMBLY, Complete RH (supersedes 209-22002-32 for future procurement) (see figure 87 for breakdown)	1	FR	
	209-22002-21	.							ELEVATOR ASSEMBLY, Complete LH (supersedes 209-22002-31 for future procurement) (see figure 87 for breakdown)	1	FR	
	209-22002-32	.							ELEVATOR ASSEMBLY, Complete RH (superseded by 209-22002-22 for future procurement) (see figure 87 for breakdown)	1	KU	442
	209-22002-31	.							ELEVATOR ASSEMBLY, Complete LH (superseded by 209-22002-21 for future procurement) (see figure 87 for breakdown)	1	KU	442
-33	NAS464-8-50	.							BOLT	1		
-34	2W18-816M	.							WASHER, Flat (NA) (89372) (use under bolthead)	1		
-35	2W18-816	.							WASHER, Flat (NA) (89372) (use under nut)	1		
-36	AN320-8	.							NUT	1		
-37	NAS334CPA21	.							BOLT	2		
-38	2W18-416M	.							WASHER, Flat (NA) (89372)	2		
-39	2W18-416	.							WASHER, Flat (NA) (89372)	3		
-40	AN365-428	.							NUT	2		
-41	NAS336CPA20	.							BOLT	1		
-42	2W18-616	.							WASHER, Flat (NA) (89372)	1		
-43	2W18-616M	.							WASHER, Flat (NA) (89372)	1		
-44	AN365-624	.							NUT	1		
-45	6043-2-2-3	.							JUMPER (JPN) (75007)	2		
	ATTACHING PARTS											
	NAS463D-DD10	.							SHIM (aft end of jumper)	1		
	AN520-10-8	.							SCREW (aft end of jumper)	1		
	AN509-10R10	.							SCREW (aft end of jumper)	1		
	3600-2-02	.							NUT, Anchor (NUS) (80539) (aft end of jumper)	1		
	3600-02	.							NUT, Anchor (NUS) (80539) (aft end of jumper)	1		
	AN509-10R9	.							SCREW (forward end of jumper)	2		
	2W18-1032	.							WASHER, Flat (NA) (89372) (forward end of jumper)	2		
	AN365-1032	.							NUT (forward end of jumper)	2		
	---*---											
-46	AN749-3-5	.							JUMPER	2		
	ATTACHING PARTS											
	AN3H3A	.							BOLT	2		
	AN3-5A	.							BOLT	2		
	2W18-10	.							WASHER, Flat (NA) (89372)	4		
	AN363-1032	.							NUT	2		
	---*---											
-47	187-21402-9	.							FITTING ASSEMBLY, Horizontal stabilizer center section	1	ET	
	187-21402-13	.							FITTING ASSEMBLY, Horizontal stabilizer center section	1	FR	
-48	AN4H7A	.	.						BOLT	1		
-49	2W18-416M	.	.						WASHER, Flat (NA) (89372)	1		
-50	2W1AL16-22-091	.	.						WASHER, Plain (NA) (89372)	1		
-51	209-21310	.	.						LOCK, Horizontal stabilizer to actuating cylinder attaching bolt	1		
-52	209-58793	.	.						GUIDE, Hydraulic flight control stabilizer cylinder	1		
-53	MS15001-1	.	.						FITTING, Lubrication	2		
-54	NAS516-1	.	.						FITTING, Lubricator	2	ET	
-55	AN535-4-4	.	.						SCREW	2		
-56	4B19S5-010	.	.						BUSHING, Press fit plain (NA) (89372)	2	ET	
-57	209-522359-15	.	.						BUSHING, Elevator control linkage close tolerance rotation	1	FR	
-58	4B19S6-010	.	.						BUSHING, Press fit plain (NA) (89372)	2	ET	
-59	4B19S12-011	.	.						BUSHING, Press fit plain (NA) (89372)	2		
-60	4B19S12-024	.	.						BUSHING, Press fit plain (NA) (89372)	4		
-61	4B19S12-016	.	.						BUSHING, Press fit plain (NA) (89372)	4		
-62	4B19S12-018	.	.						BUSHING, Press fit plain (NA) (89372)	8		
-63	HSBG-14SA	.	.						BEARING (HLF) (97613)	2		
-64	187-21416	.	.						BUSHING, Horizontal stabilizer bearing retaining	2		
-65	209-52260-7	.	.						BUSHING, Elevator control linkage	2	ET	

HORIZONTAL STABILIZER ASSEMBLY

FIGURE & INDEX NO.	PART NUMBER	1	2	3	4	5	6	7	NOMENCLATURE	UNITS PER ASSY.	USABLE ON CODE	S/C NO.
89-66	209-522352	.	.						FITTING, Deboosting elevator control	1	FR	
-67	209-522359-7	.	.						BUSHING, Elevator control linkage close tolerance rotation	1	FR	
-68	NAS516-1	.	.						FITTING, Lubricator	1	FR	
-69	AN364-524	.	.						NUT	2	FR	
-70	2W18-516	.	.						WASHER, Flat (NA) (89372)	2	FR	
-71	4B21S5-100	.	.						BUSHING, Spacer (NA) (89372)	2	FR	
-72	2W18-516M	.	.						WASHER, Flat (NA) (89372)	2	FR	
-73	NAS464P5A45	.	.						BOLT	2	FR	
-74	AN365-428	.	.						NUT	2	FR	
-75	2W18-416	.	.						WASHER, Flat (NA) (89372)	2	FR	
-76	2W18-416M	.	.						WASHER, Flat (NA) (89372)	2	FR	
-77	AN174-22A	.	.						BOLT	2	FR	
-78	AN364-524	.	.						NUT	1	FR	
-79	2W18-516	.	.						WASHER, Flat (NA) (89372)	1	FR	
-80	2W18-516M	.	.						WASHER, Flat (NA) (89372)	1	FR	
-81	NAS464P5A27	.	.						BOLT	1	FR	
-82	5P48	.	.						PLATE, Navy identification and modification (NA) (89372)	1		
-83	AN535-2-4	.	.						SCREW	4		
-84	209-52263-5	.							HORN ASSEMBLY, Elevator control (superseded by 209-52263-11 for future procurement) (see Surface and Secondary Controls)	1	ET	
	209-52263-11	.							HORN ASSEMBLY, Elevator control (supersedes 209-52263-5 for future procurement) (see Surface and Secondary Controls)	1	ET	
	209-522381	.							HORN, Elevator control preloaded assembly of (see Surface and Secondary Controls)	1	FR	
-85	209-52261-19	.							BUSHING, Elevator control linkage rotation (superseded by 209-52261-21 for future procurement)	2	ET	
	209-52261-21	.							BUSHING, Elevator control linkage rotation (supersedes 209-52261-19 for future procurement)	2	ET	
	209-52261-23	.							BUSHING, Elevator control linkage rotation	1	FR	

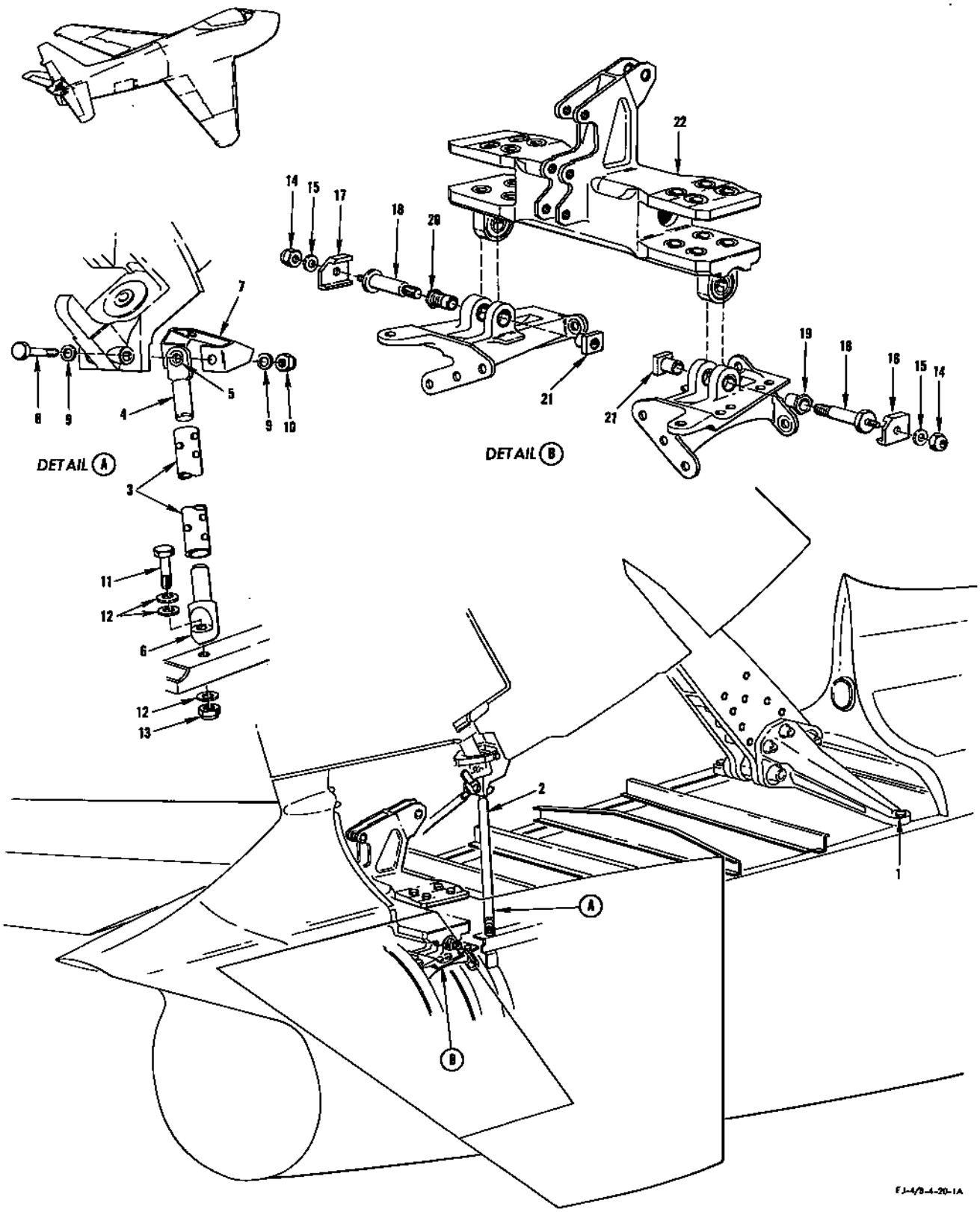

FIGURE 90 - HORIZONTAL AND VERTICAL STABILIZER TO FUSELAGE ATTACHING PARTS

HORIZONTAL AND VERTICAL STABILIZER TO FUSELAGE ATTACHING PARTS

FIGURE & INDEX NO.	PART NUMBER	1 2 3 4 5 6 7 NOMENCLATURE	UNITS PER ASSY.	USABLE ON CODE
90-1	AN182-24A	BOLT	2	
	2W18-1216	WASHER, Flat (NA) (89372)	4	
	S-1452-126	NUT, Barrel (EN) (72962)	2	
-2	209-23358-2	SUPPORT ASSEMBLY, Vertical stabilizer aft beam to fuselage RH	1	
	209-23358-1	SUPPORT ASSEMBLY, Vertical stabilizer aft beam to fuselage LH	1	
-3	209-23406	. TUBE, Vertical stabilizer aft beam to fuselage support	1	
-4	209-23404	. FITTING ASSEMBLY, Vertical stabilizer aft beam to fuselage support upper-	1	
-5	4B1985-010	. . BUSHING, Press fit plain (NA) (89372)	1	
-6	209-23405	. FITTING, Vertical stabilizer aft beam to fuselage support lower	1	
-7	209-58353	SWIVEL SUPPORT, Hydraulic No. 1 flight control rudder boost line	1	FR
	209-71613	CLIP, Vertical stabilizer coaxial cable routing	1	ET
-8	NAS464-5A12	BOLT, RH	1	ET
	NAS464-5A11	BOLT, LH	1	ET
	NAS464-5A12	BOLT	2	FR
-9	2W18-516	WASHER, Flat (NA) (89372)	4	
-10	22FT-524	NUT, Self-locking thin (SPS) (56878)	2	
-11	AN175-13A	BOLT	2	
-12	2W18-516	WASHER, Flat (NA) (89372)	6	
-13	AN363-524	NUT	2	
-14	AN363-524	NUT	2	
-15	2W18-516	WASHER, Flat (NA) (89372)	2	
-16	187-21409-2	RETAINER, Horizontal stabilizer to fuselage attaching bolt RH	1	
-17	187-21409-1	RETAINER, Horizontal stabilizer to fuselage attaching bolt LH	1	
-18	187-21403	BOLT, Horizontal stabilizer to fuselage attaching	2	
-19	187-21406	BUSHING, Horizontal stabilizer rotation point RH	1	
-20	187-21404	BUSHING, Horizontal stabilizer rotation point LH	1	
-21	187-21405	NUT, Horizontal stabilizer rotation point	2	
-22	187-21402-9	FITTING ASSEMBLY, Horizontal stabilizer center section (see figure 89 for breakdown)	1	ET
	187-21402-13	FITTING ASSEMBLY, Horizontal stabilizer center section (see figure 89 for breakdown)	1	FR

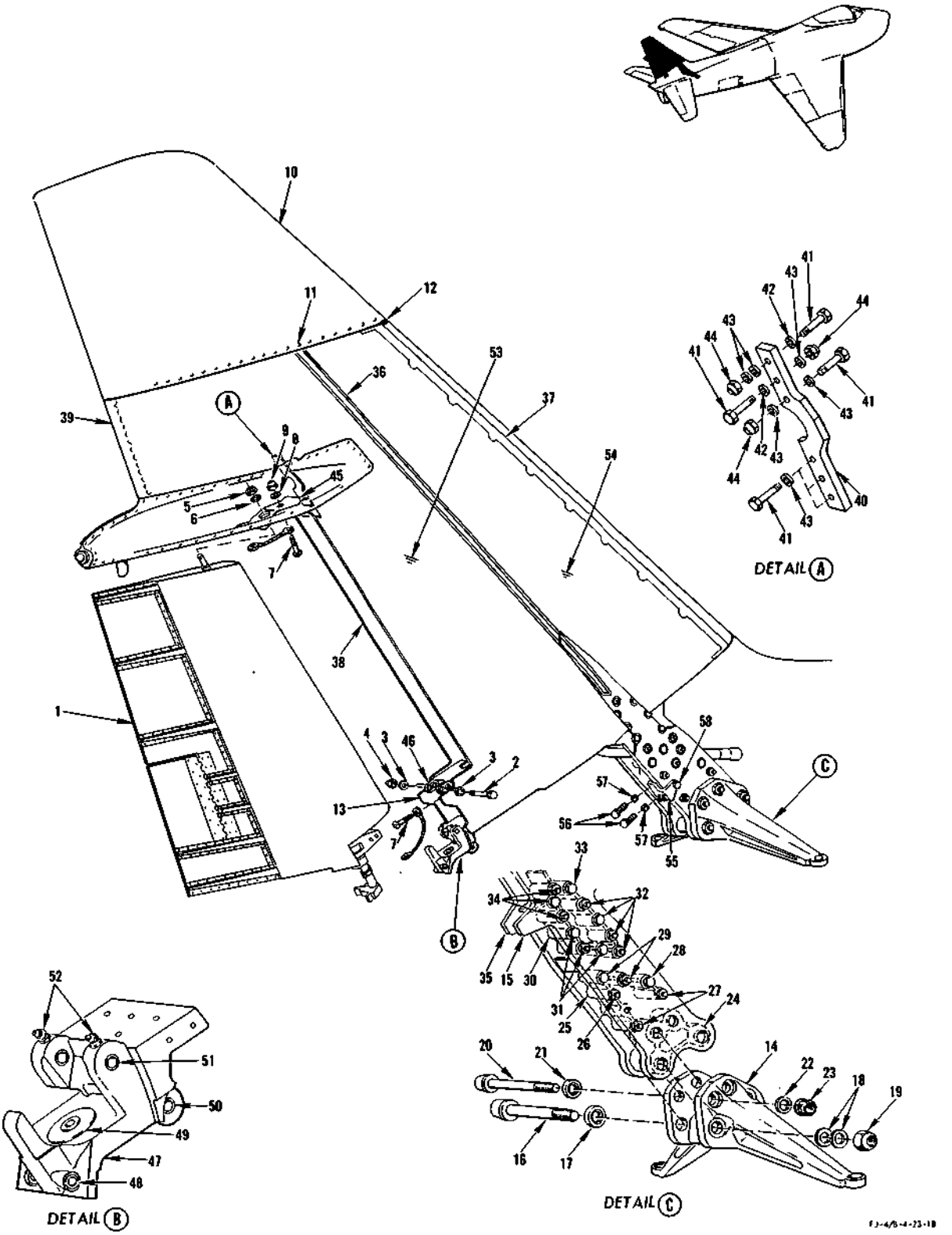

FIGURE 91 - VERTICAL STABILIZER ASSEMBLY

VERTICAL STABILIZER ASSEMBLY

FIGURE & INDEX NO.	PART NUMBER	1 2 3 4 5 6 7 NOMENCLATURE	UNITS PER ASSY.	USABLE ON CODE
91	209-23001-301	STABILIZER ASSEMBLY, Vertical	1	NE
	209-23001-501	STABILIZER ASSEMBLY, Vertical (superseded by 209-23001-901 for future procurement)	1	FR
	209-23001-701	STABILIZER ASSEMBLY, Vertical	1	LB 434
	209-23001-901	STABILIZER ASSEMBLY, Vertical (supersedes 209-23001-501 for future procurement)	1	FR
-1	209-24007	. FRAME ASSEMBLY, Rudder complete (superseded by 209-24007-11 for future procurement) (see figure 92 for breakdown)	1	Y 442, 486
	209-24007-11	. FRAME ASSEMBLY, Rudder complete (supersedes 209-24007 for future procurement) (see figure 92 for breakdown)	1	ET 442, 486
	209-24007-21	. FRAME ASSEMBLY, Rudder complete (superseded by 209-24007-31 for future procurement) (see figure 92 for breakdown)	1	KU 486
	209-24007-31	. FRAME ASSEMBLY, Rudder complete (supersedes 209-24007-21 for future procurement) (see figure 92 for breakdown)	1	FR 486
	ATTACHING PARTS			
-2	NAS464-4A32	. BOLT	2	
-3	2W18-416	. WASHER, Flat (NA) (89372)	4	
-4	AN364-428	. NUT	2	
-5	AN320-5	. NUT	1	
-6	2W18-516	. WASHER, Flat (NA) (89372)	1	
	---*---			
-7	AN520-10R10	. SCREW	2	
-8	2W18-10M	. WASHER, Flat (NA) (89372)	1	
-9	AN365-1032	. NUT	1	
-10	209-23325	. TIP ASSEMBLY, Vertical stabilizer splitter fairing plastic	1	
	ATTACHING PARTS			
-11	AN509-10R11	. SCREW	48	
	3600-02	. NUT PLATE (NUS) (80539)	21	
	25A5-02	. NUT PLATE (EN) (72962)	27	
	---*---			
	209-23002-31	. FRAME ASSEMBLY, Vertical stabilizer	1	ET
	209-23002-41	. FRAME ASSEMBLY, Vertical stabilizer	1	FR
-12	209-23379	. . FILLER, Vertical stabilizer tip rib leading edge (supersedes 209-23375 for future procurement)	1	
-13	209-23368	. . INTERCOSTAL ASSEMBLY, Vertical stabilizer root aft attaching fitting support	1	
	3600-02	. . . NUT PLATE (NUS) (80539) (forward anchor for bonding jumper)	1	
-14	209-23401-3	. . FITTING, Vertical stabilizer main beam to fuselage attaching	1	
-15	209-23403-2	. . CAP, Vertical stabilizer main beam RH	1	
-16	MS20018-92	. . BOLT	2	
-17	2W10-18	. . WASHER, Countersunk (NA) (89372) (use under bolthead)	2	
-18	2W18-1816	. . WASHER, Flat (NA) (89372) (use 2 under each nut)	4	
-19	AN365-1812	. . NUT	2	
-20	MS20014-32	. . BOLT	2	
-21	2W10-14	. . WASHER, Countersunk (NA) (89372) (use under bolthead)	2	
-22	2W18-1416M	. . WASHER, Flat (NA) (89372) (use under nut)	2	
	2W18-1416	. . WASHER, Flat (NA) (89372) (use under nut)	2	
-23	EB-144	. . NUT (EN) (72962)	2	
-24	209-23414	. . FITTING, Vertical stabilizer main beam cap lower spacer	1	
-25	209-23415-3	. . FITTING ASSEMBLY, Vertical stabilizer main beam intermediate spacer	1	ET
	209-23415	. . FITTING ASSEMBLY, Vertical stabilizer main beam intermediate spacer	1	FR
-26	NAS464-6A65	. . BOLT	1	
	2W18-616M	. . WASHER, Flat (NA) (89372) (use under bolthead)	1	
	2W18-616	. . WASHER, Flat (NA) (89372) (use under nut)	1	
	AN364-624	. . NUT	1	
-27	NAS146-77	. . BOLT	2	
	NAS143-6C	. . WASHER (use under bolthead)	2	
	2W18-616M	. . WASHER, Flat (NA) (89372) (use under nut)	2	
	2W18-616	. . WASHER, Flat (NA) (89372) (use under nut)	2	
	AN365-624	. . NUT	2	
-28	NAS146-66	. . BOLT	1	
	NAS143-6C	. . WASHER, (use under bolthead)	1	
	2W18-616	. . WASHER, Flat (NA) (89372) (use under nut)	1	
	AN365-624	. . NUT	1	
-29	NAS464-6A55	. . BOLT	2	
	2W18-616M	. . WASHER, Flat (NA) (89372)	2	
	2W18-616	. . WASHER, Flat (NA) (89372)	2	
	AN364-624	. . NUT	2	
-30	209-23416	. . FITTING, Vertical stabilizer main beam cap upper spacer	1	
-31	NAS464-6A53	. . BOLT	3	
	2W18-616M	. . WASHER, Flat (NA) (89372) (use under bolthead)	3	
	2W18-616	. . WASHER, Flat (NA) (89372) (use under bolthead)	3	
	AN364-624	. . NUT	3	
-32	NAS464-6A49	. . BOLT	4	
	2W18-616M	. . WASHER, Flat (NA) (89372) (use under bolthead)	4	
	2W18-616	. . WASHER, Flat (NA) (89372) (use under nut)	4	
	AN364-624	. . NUT	4	
-33	NAS464-6A47	. . BOLT	1	
	2W18-616M	. . WASHER, Flat (NA) (89372) (use under bolthead)	1	
	2W18-616	. . WASHER, Flat (NA) (89372) (use under nut)	1	
	AN364-624	. . NUT	1	

VERTICAL STABILIZER ASSEMBLY

FIGURE & INDEX NO.	PART NUMBER	1	2	3	4	5	6	7	NOMENCLATURE	UNITS PER ASSY.	USABLE ON CODE
91-34	NAS464-6A51	.	.						BOLT	3	
	2W18-616M	.	.						WASHER, Flat (NA) (89372) (use under bolthead)	3	434
	2W18-616	.	.						WASHER, Flat (NA) (89372) (use under nut)	3	
	AN364-624	.	.						NUT	3	
-35	209-23403-1	.	.						CAP, Vertical stabilizer main beam LH	1	
-36	209-23302	.	.						CHANNEL, Vertical stabilizer main beam	1	
-37	209-23301	.	.						BEAM ASSEMBLY, Vertical stabilizer front	1	
-38	209-23303-11	.	.						BEAM ASSEMBLY, Vertical stabilizer rear lower	1	
-39	209-23411	.	.						BEAM ASSEMBLY, Vertical stabilizer upper trailing edge	1	
-40	209-23407-2	.	.						FITTING, Vertical stabilizer aft beam upper splice RH	1	
	209-23407-1	.	.						FITTING, Vertical stabilizer aft beam upper splice LH	1	
	ATTACHING PARTS										
-41	AN5-10A	.	.						BOLT	6	
-42	2W18-516M	.	.						WASHER, Flat (NA) (89372) (use under bolthead)	2	
-43	2W18-516	.	.						WASHER, Flat (NA) (89372)	8	
-44	AN365-524	.	.						NUT	3	
	209-23002-11	.	.						NUT, Channel (make from 22G1-054J8-3 (EN) (72962)	1	
	---*---										
-45	209-23412	.	.						FITTING ASSEMBLY, Vertical stabilizer upper hinge (superseded by 209-23425 and 209-23425-5 for future procurement)	1	Y
	209-23425	.	.						FITTING ASSEMBLY, Vertical stabilizer upper hinge (supersedes 209-23412 and is superseded by 209-23425-5 for future procurement)	1	Y
	209-23425-5	.	.						FITTING ASSEMBLY, Vertical stabilizer upper hinge (supersedes 209-23412 and 209-23425 for future procurement)	1	Y
	209-23425-11	.	.						FITTING ASSEMBLY, Vertical stabilizer upper hinge	1	Z
	2C12-1	.	.	.					CLIP (NA) (89372)	1	
	52-018-078-1500	.	.	.					ROLLPIN (EN) (72962)	1	
	AN200KS5	.	.	.					BEARING	1	
-46	209-23413	.	.						FITTING ASSEMBLY, Vertical stabilizer lower hinge	1	
	4B19S4-012	.	.	.					BUSHING, Press fit plain (NA) (89372)	4	
	NAS463W-DD10	.	.	.					SHIM	3	
	3600-2-02	.	.	.					NUT PLATE (NUS) (80539)	2	
-47	209-23410	.	.						FITTING ASSEMBLY, Vertical stabilizer root aft attaching (superseded by 209-23424-5 for future procurement)	1	
	209-23424-5	.	.						FITTING ASSEMBLY, Vertical stabilizer root aft attaching (supersedes 209-23410 and is superseded by 209-23424-21 for future procurement)	1	
	209-23424-21	.	.						FITTING ASSEMBLY, Vertical stabilizer root aft attaching (supersedes 209-23424-5 for future procurement)	1	FR
-48	4B19S5-010	.	.	.					BUSHING, Press fit plain (NA) (89372)	2	
-49	AN200KS6	.	.	.					BEARING	1	
-50	4B19S6-008	.	.	.					BUSHING, Press fit plain (NA) (89372)	2	
-51	209-23421	.	.	.					BUSHING, Vertical stabilizer root fitting lubricating	2	
-52	MS15001-3	.	.	.					FITTING, Lubrication	2	
-53	209-23002-18	.	.						SKIN, Vertical stabilizer aft extended RH (make from 209-23423-4)	1	
	209-23302-17	.	.						SKIN, Vertical stabilizer aft extended LH (make from 209-23423-3)	1	
-54	209-23002-3	.	.						SKIN, Vertical stabilizer forward (make from 209-23419)	1	
-55	209-52450								FITTING, Rudder bungee forward attaching	1	FR
-56	AN4-7A								BOLT	2	FR
-57	2W18-416								WASHER, Flat (NA) (89372)	2	FR
-58	NAS146-77								BOLT	1	ET
	NAS146-80								BOLT	1	FR
	NAS143-6C								WASHER (use under bolthead)	1	
	2W18-416								WASHER, Flat (NA) (89372) (use under nut)	1	
	2W18-416M								WASHER, Flat (NA) (89372) (use under nut)	1	
	AN365-624								NUT	1	

RUDDER AND TRIM TAB ASSEMBLY

FIGURE & INDEX NO.	PART NUMBER	1 2 3 4 5 6 7 NOMENCLATURE	UNITS PER ASSY.	USABLE ON CODE	S/C NO.
92	209-24007	FRAME ASSEMBLY, Rudder complete (superseded by 209-24007-11 for future procurement)	1	Y	442, 486
	209-24007-11	FRAME ASSEMBLY, Rudder complete (supersedes 209-24007 for future procurement)	1	ET	442, 486
	209-24007-21	FRAME ASSEMBLY, Rudder complete (superseded by 209-24007-31 for future procurement)	1	KU	486
	209-24007-31	FRAME ASSEMBLY, Rudder complete (supersedes 209-24007-21 for future procurement)	1	FR	486
-1	209-24405-5	. TUBE ASSEMBLY, Rudder torque	1	ET	
	209-24405-11	. TUBE ASSEMBLY, Rudder torque	1	FR	
	ATTACHING PARTS				
-2	NAS464-4A41	. BOLT	1		
-3	2W18-416	. WASHER, Flat (NA) (89372)	1		
-4	AN364-428	. NUT	1		
	---*---				
-5	209-24405-3	. . TUBE, Rudder torque tube assembly	1	ET	
	209-24405-7	. . TUBE, Rudder torque tube assembly	1	FR	
-6	209-24419	. . PIN, Rudder station 28.065 hinge	1	ET	
	209-24419-3	. . PIN, Rudder station 28.065 hinge	1	FR	
	2W18-616	. . WASHER, Flat (NA) (89372)	1		
	AN365-624	. . NUT	1		
-7	NAS428H5-11	. . BOLT, Adjusting crowned hexagon head	2		
	1N7-5A	. . NUT, Check (NA) (89372)	2		
	AN365-524	. . NUT	2		
-8	AN200KS5	. . BEARING	1		
-9	4B19S4-008	. . BUSHING, Press fit plain (NA) (89372)	2		
-10	209-23418	. LINK ASSEMBLY, Vertical stabilizer lower hinge	1		
-11	52-012-062-0250	. . ROLLPIN (EN) (72962)	1		
-12	NAS334PA24	. BOLT, 100° close tolerance high strength	1		
-13	2W18-416	. WASHER, Flat (NA) (89372)	2		
-14	AN364-428	. NUT	1		
-15	6143A-3-3-20	. BRAID, Bonding (JPN) (75007)	1		
-16	AN520-10R11	. SCREW	1		
	2W18-10	. WASHER, Flat (NA) (89372)	1		
	AN365-1032	. NUT	1		
-17	AA2205W428	. BARREL NUT (AAMP) (83885)	1		
-18	192-24411	. BOLT, Rudder balance weight attaching	1		
-19	209-24408-3	. WEIGHT, Rudder balance	8		
	209-24408-5	. WEIGHT, Rudder unbalance	AR		
-20	209-24417	. BOLT, Rudder upper hinge	1		
-21	209-24415	. PIN, Rudder upper hinge	1		
-22	6143A-3-3-20	. BRAID, Bonding (JPN) (75007)	1		
-23	AN509-10R21	. SCREW	1		
	AN365-1032	. NUT	1		
-24	209-24536	. PIN, Trim tab hinge	1		
	209-24502	. TAB ASSEMBLY, Rudder trim (superseded by 209-24531 for future procurement)	1	Y	
	209-24531	. TAB ASSEMBLY, Rudder trim (supersedes 209-24502 for future procurement)	1	KN	
	209-24531-11	. TAB ASSEMBLY, Rudder trim	1	KP	
-25	209-24534	. . HORN, Rudder trim tab actuator	1	Z	
-26	AN3-6A	. . BOLT	4	Z	
	2W18-10M	. . WASHER, Flat (NA) (89372) (use under bolthead)	4	Z	
	2W18-10	. . WASHER, Flat (NA) (89372) (use under nut)	4	Z	
	AN365-1032	. . NUT	4	Z	
-27	209-24518-3	. . HINGE, Rudder splitter plate to trim tab (superseded by 209-24532 for future procurement)	1	Y	
	209-24532	. . HINGE, Rudder splitter plate to trim tab (supersedes 209-24518-3 for future procurement)	1		
-28	209-24521	. . PLATE, Rudder trim tab honeycomb (superseded by 209-24535 for future procurement) (use on 209-24502 only)	1	Y	
	209-24535	. . PLATE, Rudder trim tab honeycomb (supersedes 209-24521 for future procurement) (use on 209-24531 only)	1	KN	
	209-24535-11	. . PLATE, Rudder trim tab honeycomb (use on 209-24531-11 only)	1	KP	
	209-24008	. STRUCTURE ASSEMBLY, Rudder splitter plate (superseded by 209-24008-11 for future procurement)	1	Y	
	209-24008-11	. STRUCTURE ASSEMBLY, Rudder splitter plate (supersedes 209-24008 for future procurement)	1	KN	
	209-24010	. STRUCTURE ASSEMBLY, Rudder splitter plate trailing edge	1	KP	
-29	209-24403	. . BEAM ASSEMBLY, Rudder front	1		
-30	209-24418	. . . BUSHING, Rudder leading edge beam	2		
-31	209-924408	. . . RING, Rudder leading edge snap (NA) (89372) Dwg Design Spec) (supersedes 5000-75MD (WKI) (79136) for future procurement)	2		
	AN201KP4A	. . . BEARING	2		
-32	4B19S10-112	. . . BUSHING, Press fit plain (NA) (89372)	1		
-33	AN509-10R28	. . SCREW	7		
-34	209-24409	. . CAP, Rudder balance weight lower	1		
-35	209-24404	. . WEIGHT, Rudder balance lower	1		
-36	209-24407	. . CAP, Rudder balance weight upper	1		
-37	209-24406	. . WEIGHT, Rudder balance upper	1		
-38	AN749-3-3	. . JUMPER	1		
-39	NAS221-13	. . SCREW	1		

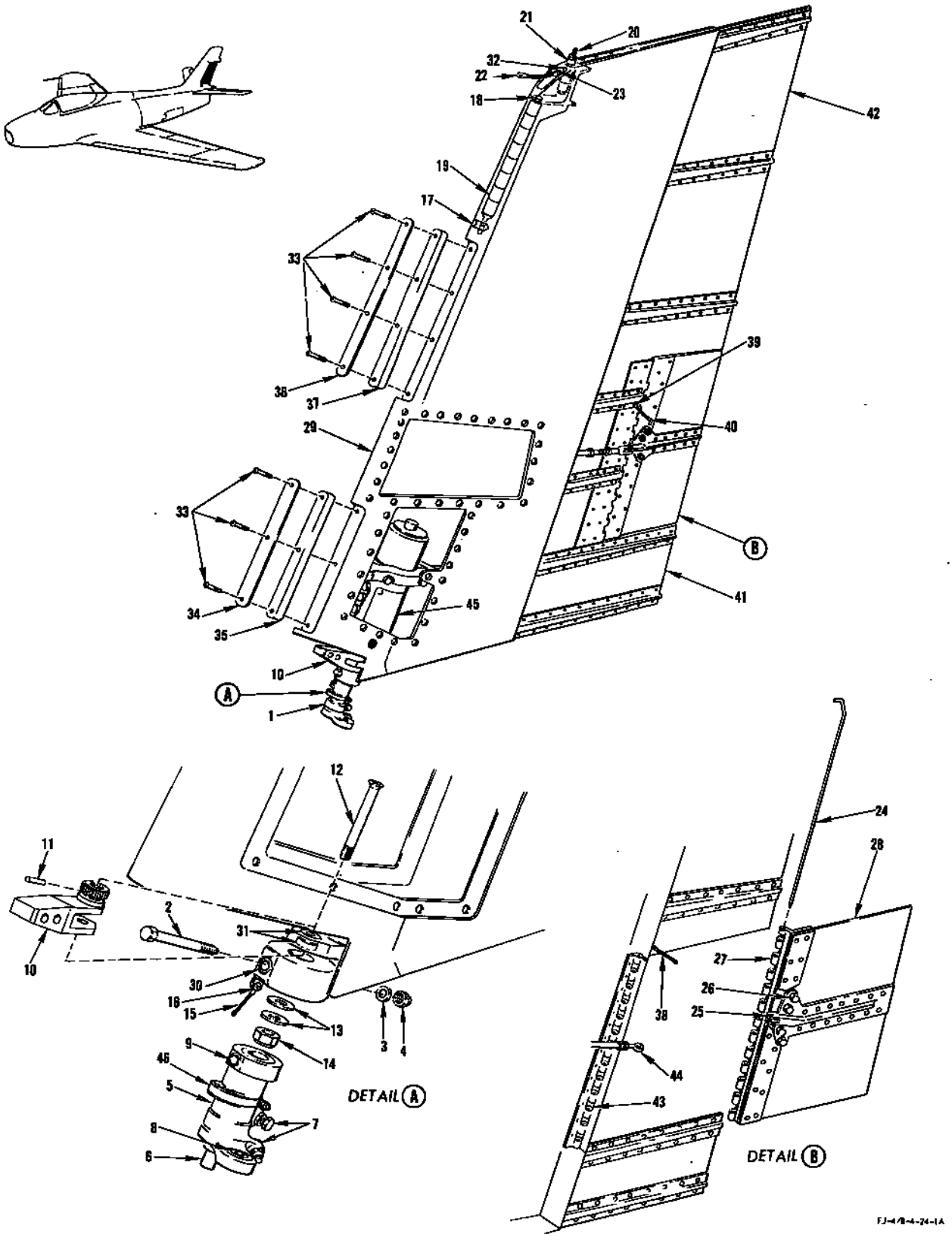

FIGURE 92 - RUDDER AND TRIM TAB ASSEMBLY

RUDDER AND TRIM TAB ASSEMBLY

FIGURE & INDEX NO.	PART NUMBER	1 2 3 4 5 6 7 NOMENCLATURE		UNITS PER ASSY.	USABLE ON CODE
92	2W18-10	. . WASHER, Flat (NA) (89372)	1		
	AN364-1032	. . NUT	1		
-40	NAS221-15	. . SCREW	1	Y	
	NAS221-13	. . SCREW	1	Z	
	2W18-10	. . WASHER, Flat (NA) (89372)	1		
	AN365-1032	. . NUT	1		
	209-24011	. . TRAILING EDGE ASSEMBLY, Splitter rudder	1	KP	
-41	209-24011-3	. . . HONEYCOMB, Splitter rudder trailing edge assembly	1	KP	
-42	209-24011-5	. . . HONEYCOMB, Splitter rudder trailing edge assembly	1	KP	
-43	209-24518-5	. . . HINGE, Rudder splitter plate to trim tab (superseded by 209-24533 for future procurement)	1	Y	
	209-24533	. . . HINGE, Rudder splitter plate (supersedes 209-24518-5 for future procurement)	1		
-44	D-1840-4	ACTUATOR, Rudder trim tab (HOOV) (81817) (see Surface and Secondary Controls)	1	Z	
	209-52497	ROD ASSEMBLY, Rudder trim tab mechanism actuator (see Surface and Secondary Controls)	1	Y	
-45	209-587181	. DAMPER ASSEMBLY, Hydraulic flight control rudder flutter (see Surface and Secondary Controls)	1	LB	434
-46	209-48352	BLOCK, Hydraulic line support rudder post	1	FR	
	320-625-181SH	CLAMP (MAR) (98625)	1		

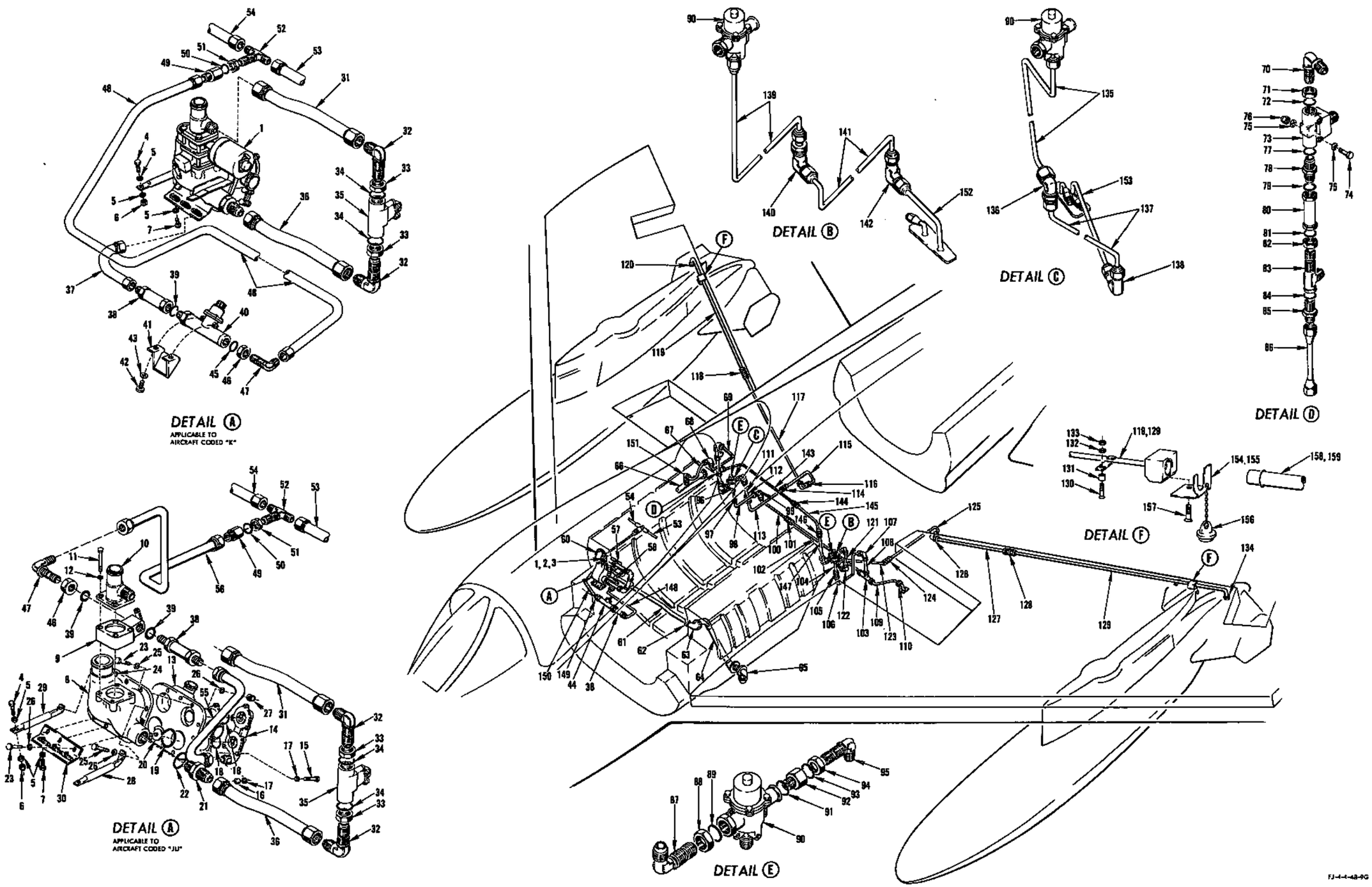

FIGURE 93 - AIR PRESSURE SYSTEM - APPLICABLE TO AIRCRAFT CODED (ET)

AIR PRESSURE SYSTEM - APPLICABLE TO AIRCRAFT CODED (ET)

FIGURE & INDEX NO.	PART NUMBER	1 2 3 4 5 6 7 NOMENCLATURE	UNITS PER ASSY.	USABLE ON CODE	S/C NO.
93-1	209-48251	MANIFOLD ASSEMBLY, Wing fuel tank venting and pressurizing (for breakdown see Technical Manual NAVAER 03-10ABN505)	1	K	
-2	209-48251-11	MANIFOLD ASSEMBLY, Wing fuel tank venting and pressurizing (superseded by 209-48251-21 for future procurement) (for breakdown see Technical Manual NAVAER 03-10ABN505)	1	JU	
-3	209-48251-21	MANIFOLD ASSEMBLY, Wing fuel tank venting and pressurizing (supersedes 209-48251-11 for future procurement)	1	JU	
		ATTACHING PARTS			
-4	AN4-6A	BOLT	2	ET	
-5	2W18-416	WASHER, Flat (NA) (89372)	7	ET	
-6	AN365-428	NUT	2	ET	
-7	AN4-5A	BOLT	3	ET	
		---*---			
-8	209-48252-3	. MANIFOLD ASSEMBLY, Fuel forward fuselage vent upper half	1	JU	
	1185-06CNx-.276	. . INSERT, Heli-coil (AF) (91767)	4	ET	
	RL28SB-8	. . RING (ROSN) (83324)	4	ET	
	RD206SB-6.5L	. . INSERT (ROSN) (83324)	4	ET	
-9	LH1330	*2. VALVE ASSEMBLY (Lourdes Hydraulics Inc) (01178) (wing fuel vent by-pass) (superseded by LH13301 (Lourdes Hydraulic Inc) (01178) for future procurement)	1	JU	
	LR13301	*2. VALVE ASSEMBLY (Lourdes Hydraulics Inc) (01178) (wing fuel vent by-pass) (supersedes LH1330 (Lourdes Hydraulics Inc) (01178) for future procurement)	1	JU	
-10	209-48309	. FITTING, Wing fuel vent valve by-pass	1	ET	
-11	AN4-22	. BOLT	4	ET	
-12	2W18-416M	. WASHER, Flat (NA) (89372)	4	ET	
-13	209-48256	. MANIFOLD ASSEMBLY, Fuel forward fuselage vent lower half	1	ET	
	1185-06CNx-.276	. . INSERT, Heli-coil (AF) (91767)	4	ET	
	PL28SB-8	. . RING (ROSN) (83324)	2	ET	
	RD206SB-6.5L	. . INSERT (ROSN) (83324)	2	ET	
-14	209-48310	. FITTING ASSEMBLY, Fuel wing air pressure swing check	1	ET	
	1211-517246	. . VALVE ASSEMBLY (PAET) (92003)	2	ET	
	1211-517115	. . PIN (PAET) (92003)	2	ET	
	8730-517251	. . SPRING (PAET) (92003)	2	ET	
	209-48311	. . FITTING, Fuel wing air pressure swing check	1	ET	
	209-48250	. . ORIFICE, Flow limiting wing tank pump	2	ET	
-15	AN4-7A	. BOLT	7	ET	
-16	AN365-428	. NUT	7	ET	
-17	2W18-416M	. WASHER, Flat (NA) (89372)	14	ET	
-18	MS29513-222	. PACKING	2	ET	
-19	MS29513-231	. PACKING	4	ET	
-20	MS29521-24	. VALVE (used on 209-48252-3) (interchangeable with 37161 (KOE) (75361) or 6-2400 (SAHR) (96736))	2	ET	
	MS29521-20	. VALVE (used on 209-48253) (interchangeable with 37181 (KOE) (75361) or 6-2000 (SAHR) (96736))	2	ET	
		ATTACHING PARTS			
	AN500A6-6	. SCREW	8	ET	
	2W1AL10-10-32	. WASHER, Plain (NA) (89372)	8	ET	
		---*---			
-21	AN815-12	. UNION	1	ET	
-22	MS29521-12	. GASKET	1	ET	
-23	AN4-10A	. BOLT	11	ET	
-24	AN4-11A	. BOLT	1	ET	
-25	AN4-5A	. BOLT	2	ET	
-26	2W18-416M	. WASHER, Flat (NA) (89372)	28	ET	
-27	AN365-428	. NUT	12	ET	
-28	209-48212	. BRACE, Fuel vent manifold support LH	1	JU	
-29	209-48327-2	. TUBE ASSEMBLY, Fuel vent manifold support RH	1	ET	
-30	209-48254	. BRACKET ASSEMBLY, Fuel vent support	1	ET	
	3600-2-048BC100	. . NUT PLATE (NUS) (80539)	3	ET	
-31	209-48801-27	LINE ASSEMBLY, Wing fuel pressure relief valve to vent valve by-pass fitting	1	ET	
-32	AN833-12D	ELBOW	2	ET	
-33	AN924-12D	NUT	2	ET	
-34	MS29512-12	GASKET	2	ET	
-35	5-354-1	VALVE (SZT) (82267) (pressure relief)	1	ET	
-36	209-48801-25	LINE ASSEMBLY, Fuel vent manifold assembly to wing fuel pressure relief valve	1	K	
	209-48801-99	LINE ASSEMBLY, Fuel vent manifold assembly to wing fuel pressure relief valve	1	JU	
-37	209-48801-23	LINE ASSEMBLY, Check valve to fuel vent manifold assembly	1	K	
-38	859A-8TT	VALVE (JAPC) (91816)	1	ET	
-39	MS29512-8	GASKET	1	ET	
-40	4-354-1	VALVE (SZT) (82267) (wing fuel air pressure)	1	K	
		ATTACHING PARTS			
	AN3-14A	BOLT	2	K	
	2W18-10M	WASHER, Flat (NA) (89372)	4	K	
	NAS43DD3-48	SPACER	2	K	
	AN365-1032	NUT	2	K	
		---*---			
-41	209-48248	BRACKET ASSEMBLY, Wing fuel air pressure valve support	1	K	
		ATTACHING PARTS			
-42	AN3-4A	BOLT	2	K	

AIR PRESSURE SYSTEM - APPLICABLE TO AIRCRAFT CODED (ET)

FIGURE & INDEX NO.	PART NUMBER	1 2 3 4 5 6 7	NOMENCLATURE	UNITS PER ASSY.	USABLE ON CODE	S/C NO.
93-43	2W18-10M		WASHER, Flat (NA) (89372)	2	K	
		---*---				
-44	4-354-91	*1	VALVE (SZT) (82267) (supersedes 4-354-71 (SZT) (82267) for future procurement) (wing fuel air pressure)	1	HH	
	4-354-71	*1	VALVE (SZT) (82267) (superseded by 4-354-91 (SZT) (82267) for future procurement) (wing fuel air pressure)	1	JT	
	ATTACHING PARTS					
	AN3-12A	*1	BOLT	2	JU	
	2W18-10	*1	WASHER, Flat (NA) (89372)	2	JU	
	NAS43DD3-32	*1	SPACER	2	JU	
		---*---				
	209-48211	*1	BRACKET, Air pressure valve wing fuel support assembly of	1	JU	
	ATTACHING PARTS					
	AN3-6A	*1	BOLT	2	JU	
	2W18-10M	*1	WASHER, Flat (NA) (89372)	2	JU	
	NAS43DD3-16	*1	SPACER	2	JU	
		---*---				
-45	MS29512-8		GASKET	1	ET	
-46	AN924-8D		NUT	1	K	
-47	AN833-8D		ELBOW	1	K	
-48	209-48801-21		LINE ASSEMBLY, Union at station 115 to wing fuel air pressure valve	1	K	
-49	AN894D10-8		BUSHING	1	ET	
-50	MS29512-10		GASKET	1	ET	
-51	AN924-10D		NUT	1	ET	
-52	AN834-10D		TEE	1	ET	
-53	209-51803-3		TUBE ASSEMBLY, Heat and vent tee to anti "G" filter (see Electrical and Instrument)	1	ET	
-54	181-53443		DUCT ASSEMBLY, Heat and vent system windshield anti-ice station 128.375 to station 157 (see Heat and Vent System)	1	ET	
-55	209-48821-85	*2	LINE ASSEMBLY, Wing fuel dump check valve to fuel vent manifold	1	JU	
-56	209-48821-83	*2	LINE ASSEMBLY, Wing fuel dump air supply to valve	1	JU	
-57	209-48801-165		TUBE, Wing tank dive vent forward fuselage fitting to manifold RH	1	ET	
-58	N50-150S	*3	COUPLING (NUCA) (94581)	1		
	RS-5-150	*3	SLEEVE (NUCA) (94581)	1		
-59	3655-24D		COUPLING (WIG) (79326)	1	ET	
	3601-24D-9		. WASHER (WIG) (79326)	2	ET	
	MS29513-325		PACKING	1	ET	
-60	209-48373-2		FITTING, Wing tank vent thru fuselage cell forward RH	1	ET	
	ATTACHING PARTS					
	AN4-6A		BOLT	3	ET	
	AN4H5A		BOLT	1	ET	
	2W18-416		WASHER, Flat (NA) (89372)	4	ET	
	MS29513-228		PACKING	1	ET	
		---*---				
	CF14-150		COUPLING (MAR) (98625) (supersedes C11-11150 (MAR) (98625) and/or C11-21150 (MAR) (98625) for future procurement)	1	ET	
-61	209-48801-117		TUBE, Wing tank dive vent forward fuselage fitting to manifold LH	1	ET	
-62	3655-24D		COUPLING (WIG) (79326)	1	ET	
	3601-24D-9		. WASHER (WIG) (79326)	2	ET	
	MS29513-325		PACKING	1	ET	
-63	209-48373-1		FITTING, Wing tank vent thru fuselage cell forward LH	1	ET	
	ATTACHING PARTS					
	AN4-6A		BOLT	3	ET	
	AN4H5A		BOLT	1	ET	
	2W18-416		WASHER, Flat (NA) (89372)	4	ET	
	MS29513-228		PACKING	1	ET	
		---*---				
-64	209-48377		LINE ASSEMBLY, Wing tank vent forward cell	2	ET	
-65	209-48136-1		FITTING, Fuel vent inboard wing LH	1	ET	
	209-48136-2		FITTING, Fuel vent inboard wing RH (see figure 95 for breakdown)	1	ET	
-66	209-53350		DUCT ASSEMBLY, Heat and vent (see Heat and Vent System)	1	ET	
-67	209-48801-53		TUBE ASSEMBLY, Drop tank pressure elbow station 180.9 to heat and vent line	1	ET	
-68	AN833-6D		ELBOW	1	ET	
	2W18-916		WASHER, Flat (NA) (89372)	1	ET	
	AN924-6D		NUT	1	ET	
-69	209-48801-39		TUBE ASSEMBLY, Drop tank pressure shutoff valve to elbow station 180.9	1	ET	
-70	AN833-6D		ELBOW	1	ET	
-71	AN924-6D		NUT	1	ET	
-72	MS29512-6		GASKET	2	ET	
-73	111465		VALVE (WTR) (79318) (drop tank air pressure shutoff) (superseded by 117235 (WTR) (79318) for future procurement) (for breakdown see Technical Manual NAVAER 03-30EB-590)	1	E	
	117235		VALVE (WTR) (79318) (drop tank air pressure shutoff) (supersedes 111465 (WTR) (79318) for future procurement)	1	JV	
	ATTACHING PARTS					
-74	AN3-17A		BOLT	2	ET	
-75	2W16-10M		WASHER, Flat (NA) (89372)	4	ET	
-76	AN365-1032		NUT	2	ET	
		---*---				
-77	MS29512-6		GASKET	1	ET	
-78	AN815-6D		UNION	1	ET	
-79	MS29512-6		GASKET	1	ET	

AIR PRESSURE SYSTEM - APPLICABLE TO AIRCRAFT CODED (ET)

FIGURE & INDEX NO.	PART NUMBER	1 2 3 4 5 6 7 NOMENCLATURE	UNITS PER ASSY.	USABLE ON CODE	S/C NO.
93-80	859A-6BB	VALVE (JAPC) (91816)	1	ET	
-81	MS29512-6	GASKET	1	ET	
-82	AN924-6D	NUT	1	ET	
-83	AN784D6	TEE	1	ET	
-84	MS29512-6	GASKET	1	ET	
-85	AN919-6D	REDUCER	1	ET	
-86	209-48801-37	TUBE ASSEMBLY, Drop tank pressure regulator to tee RH	1	ET	
-87	AN833-4D	ELBOW	1	ET	
-88	AN924-4D	NUT	1	ET	
-89	MS29512-4	GASKET	1	ET	
-90	1364-526177	REGULATOR (PA) (45681) (drop tank air pressure) (for breakdown see Technical Manual NA 03-10AB-552)	1	ET	
	ATTACHING PARTS				
	AN3-5A	BOLT	3	ET	
	2W18-10M	WASHER, Flat (NA) (89372)	6	ET	
	AN365-1032	NUT	3	ET	
	---*---				
-91	MS29512-4	GASKET	1	ET	
-92	AN894D6-4	BUSHING	1	ET	
-93	MS29512-6	GASKET	1	ET	
-94	AN924-6D	NUT	1	ET	
-95	AN833-6D	ELBOW	1	ET	
-96	209-48801-47	TUBE ASSEMBLY, Drop tank pressure regulator drain RH side upper	1	DE	429
-97	AN919-12D	REDUCER	1	DE	429
-98	209-48801-55	TUBE ASSEMBLY, Drop tank pressure regulator drain RH lower	1	DE	429
-99	AN837-6D	ELBOW	1	DE	429
	AN924-6D	NUT	1	DE	429
-100	209-48801-77	TUBE ASSEMBLY, Drop tank pressure regulator to drain cross ship RH lower	1	DE	429
-101	AN815-6D	UNION	1	DE	429
-102	209-48801-59	TUBE ASSEMBLY, Drop tank pressure regulator drain cross ship	1	DE	429
-103	AN824-6D	TEE	1	DE	429
-104	209-48801-49	TUBE ASSEMBLY, Drop tank pressure regulator drain LH side upper	1	DE	429
-105	AN919-12D	REDUCER	1	DE	429
-106	209-48801-203	TUBE ASSEMBLY, Drop tank pressure regulator drain LH lower	1	DE	429
-107	AN833-6D	ELBOW	1	DE	429
	AN924-6D	NUT	1	DE	429
-108	209-48801-71	TUBE ASSEMBLY, Drop tank pressure regulator to drain LH lower	1	DE	429
-109	209-48801-61	TUBE ASSEMBLY, Drop tank pressure regulator drain tee to overboard	1	DE	429
-110	MS21900-6	ADAPTER	1	DE	429
-111	209-48801-73	TUBE ASSEMBLY, Drop tank pressure regulator to wing RH side upper	1	ET	
-112	AN815-6D	UNION	1	ET	
-113	209-48801-45	TUBE ASSEMBLY, Drop tank pressure regulator to wing RH side	1	ET	
-114	AN815-6D	UNION	1	ET	
-115	209-48801-93	TUBE ASSEMBLY, Drop tank pressure regulator to wing RH side aft	1	ET	
-116	AN821-6D	ELBOW	1	ET	
-117	209-48802-9	LINE ASSEMBLY, Drop tank air pressure RH	1	DG	
	209-483144-12	LINE ASSEMBLY, Drop tank air pressure inboard RH	1	JW	
-118	AN815-6D	UNION	1	DC	
-119	209-48802-15	LINE ASSEMBLY, Drop tank air pressure outboard RH	1	JQ	455
	209-483150	LINE ASSEMBLY, Drop tank air pressure RH inboard wing	1	JR	
	209-483144-2	LINE, Drop tank air pressure inboard assembly of (superseded by 209-483144-12 for future procurement)	1	RT	
	209-483144-12	LINE, Drop tank air pressure inboard assembly of (supersedes 209-483144-2 for future procurement)	1	HH	
-120	AN806D6	PLUG	1	ET	
-121	209-48801-51	TUBE ASSEMBLY, Drop tank pressure regulator to wing LH	1	ET	
-122	AN821-6D	ELBOW	1	DE	429
	AN815-6D	UNION	1	HY	
-123	209-48801-257	LINE ASSEMBLY, Drop tank pressure regulator drain LH union to bulkhead elbow	1	HY	
	209-48801-91	TUBE ASSEMBLY, Drop tank pressure regulator drain LH elbow to bulkhead elbow	1	DE	429
-124	AN815-6D	UNION	1	ET	
-125	209-48801-75	TUBE ASSEMBLY, Drop tank pressure regulator to wing LH side lower	1	ET	
-126	AN821-6D	ELBOW	1	ET	
-127	209-48802-3	LINE ASSEMBLY, Drop tank air pressure LH	1	DC	
	209-483144-11	LINE ASSEMBLY, Drop tank air pressure inboard LH	1	JW	
-128	AN815-6D	UNION	1	DC	
-129	209-48802-13	LINE ASSEMBLY, Drop tank air pressure outboard LH	1	JZ	455
	209-483149	LINE ASSEMBLY, Drop tank air pressure inboard LH	1	JR	
	209-483144-1	LINE, Drop tank air pressure inboard assembly of (superseded by 209-483144-11 for future procurement)	1	RT	
	209-483144-11	LINE, Drop tank air pressure inboard assembly of (supersedes 209-483144-1 for future procurement)	1	HH	
-130	AN509-10R16	SCREW	2	ET	455
-131	NAS43DD3-9	SPACER	2	ET	455
-132	2W18-10M	WASHER, Flat (NA) (89372)	2	ET	455
-133	AN365-1032	NUT	2	ET	455
-134	AN806D6	PLUG	1	ET	
-135	209-48801-245	TUBE ASSEMBLY, Drop tank pressure regulator drain RH lower	1	HY	429
-136	AN837-8D	ELBOW	1	HY	429
	AN924-8D	NUT	1	HY	429
	2W18-1216	WASHER, Flat (NA) (89372)	2	HY	429

AIR PRESSURE SYSTEM - APPLICABLE TO AIRCRAFT CODED (ET)

FIGURE & INDEX NO.	PART NUMBER	1 2 3 4 5 6 7	NOMENCLATURE	UNITS PER ASSY.	USABLE ON CODE	S/C NO.
-137	209-48801-255		LINE ASSEMBLY, Drop tank pressure regulator RH lower drain	1	HY	429
-138	AN821-8D		ELBOW	1	HY	429
-139	209-48801-247		TUBE ASSEMBLY, Drop tank pressure regulator drain LH lower	1	HY	429
-140	AN833-8D		ELBOW	1	HY	429
	AN924-8D		NUT	1	HY	429
	2W18-1216		WASHER, Flat (NA) (89372)	2	HY	429
-141	209-48801-253		LINE ASSEMBLY, Drop tank pressure regulator LH lower drain	1	HY	429
-142	AN821-8D		ELBOW	1	HY	429
-143	209-48801-41		TUBE ASSEMBLY, Drop tank pressure union to tee RH station 180.9	1	ET	
-144	AN815-6D		UNION	1	ET	
-145	209-48801-43		TUBE ASSEMBLY, Drop tank pressure union to reducer LH station 180.9	1	ET	
-146	AN919-6D		REDUCER	1	ET	
-147	209-48801-89		LINE ASSEMBLY, Reducer to LH drop tank pressure regulator	1	ET	
-148	209-48801-229	*1	LINE ASSEMBLY, Check valve to fuel vent manifold assembly	1	JU	
-149	AN815-8D	*1	UNION	1	JU	
-150	209-48801-227	*1	LINE ASSEMBLY, Union at station 115 to wing fuel air pressure valve	1	JU	
-151	AN833-6D		ELBOW	1	ET	
	MS29512-6		PACKING	1	ET	
	AN924-6D		NUT	1	ET	
-152	209-58296-101		DRAIN ASSEMBLY, Hydraulic fluid overboard LH	1	HY	429
-153	209-58296-102		DRAIN ASSEMBLY, Hydraulic fluid overboard RH	1	HY	429
	209-483148-1		RETAINER, Drop tank air pressure assembly of	1	JS	
	209-483148-2		RETAINER, Drop tank air pressure assembly of	1	JS	
-154	209-483146-1		. CLIP, Drop tank air pressure line retaining	1	JS	455
-155	209-483146-2		. CLIP, Drop tank air pressure line retaining	1	JS	455
-156	209-483147		. PLUG, Drop tank air pressure line	2	JS	455
-157	AN507-1032R8		SCREW	2	JS	455
-158	209-483143-1		LINE, Drop tank air pressure outboard assembly of (see Armament for continuation)	1	JS	
-159	209-483143-2		LINE, Drop tank air pressure outboard assembly of (see Armament for continuation)	1	JS	
	MS29513-13		PACKING	1	JS	

NOTE:
*1 Designates items used on 209-48251-11
*2 Designates items used on 209-48251-21
*3 N50-150S (NUCA)(94581) along with RS-5-150 (NUCA)(94581) supersede CF14-150 (MAR)(98625), C11-11150 (MAR) (98625), and/or C11-21150 (MAR)(98625) for future procurement

AIR PRESSURE SYSTEM - APPLICABLE TO AIRCRAFT CODED (FR)

FIGURE & INDEX NO.	PART NUMBER	1 2 3 4 5 6 7 NOMENCLATURE	UNITS PER ASSY.	USABLE ON CODE	S/C NO.
84-1	209-48351-11	MANIFOLD ASSEMBLY, Wing fuel tank venting and pressurizing (superseded by 209-48351-21 for future procurement) (for breakdown of 209-48351-11 see Technical Manual 03-10ABN-505)	1	MZ	
	209-48351-21	MANIFOLD ASSEMBLY, Wing fuel tank venting and pressurizing (supersedes 209-48351-11 for future procurement)	1	MS	
-2	209-48252-3	. MANIFOLD ASSEMBLY, Fuel forward fuselage vent upper half	1	FR	
	1185-06CNx-276	. . INSERT, Heli-coil (AF) (91767)	4	FR	
	RL28SB-8	. . RING (ROSN) (83324)	4	FR	
	RD206SB-6.5L	. . INSERT (ROSN) (83324)	4	FR	
-3	LH13301	. VALVE ASSEMBLY (Lourdes Hydraulics Inc) (01178) (supersedes LH1330 (Lourdes Hydraulics Inc) (01178) for future procurement)	1	MS	
-4	209-48309	. FITTING, Wing fuel vent valve by-pass	1	FR	
-5	AN4-22	. BOLT	4	FR	
-6	2W18-416M	. WASHER, Flat (NA) (89372)	4	FR	
-7	209-48253	. MANIFOLD ASSEMBLY, Fuel forward fuselage vent lower half	1	FR	
	1185-06CNx-.276	. . INSERT, Heli-coil (AF) (91767)	4	FR	
	RL28SB-8	. . RING (ROSN) (83324)	2	FR	
	RD206SB-6.5L	. . INSERT (ROSN) (83324)	2	FR	
-8	209-48310	. FITTING ASSEMBLY, Fuel wing air pressure swing check	1	FR	
	1211-517246	. . VALVE ASSEMBLY (PAET) (92003)	2	FR	
	1211-517115	. . PIN (PAET) (92003)	2	FR	
	8730-517251	. . SPRING (PAET) (92003)	2	FR	
	209-48311	. . FITTING, Fuel wing air pressure swing check	1	FR	
	209-48250	. . ORIFICE, Flow limiting wing tank pump	2	FR	
-9	AN4-7A	. BOLT	7	FR	
	AN365-428	. NUT	7	FR	
-10	2W18-416M	. WASHER, Flat (NA) (89372)	14	FR	
-11	MS29513-222	. PACKING	2	FR	
-12	MS29513-231	. PACKING	4	FR	
-13	MS29521-24	. VALVE (to be installed on 209-48252-3) (interchangeable with 37161 (KOE) (75361) or 6-2400 (SAHR) (96736))	2	FR	
	ATTACHING PARTS				
	AN500A6-6	. SCREW	8	FR	
	2W1AL10-10-32	. WASHER, Plain (NA) (89372)	8	FR	
	---*---				
-14	AN815-12	. UNION	1	FR	
-15	MS29512-12	. GASKET	1	FR	
-16	AN4-10A	. BOLT	11	FR	
-17	AN4-11A	. BOLT	1	FR	
-18	AN4-5A	. BOLT	1	FR	
-19	2W18-416M	. WASHER, Flat (NA) (89372)	26	FR	
-20	AN365-428	. NUT	12	FR	
-21	209-48327-2	. TUBE ASSEMBLY, Fuel vent manifold support RH	1	FR	
-22	209-48212	. BRACE, Fuel vent manifold support	1	FR	
-23	AN4-6A	. BOLT	2	FR	
-24	2W18-416	. WASHER, Flat (NA) (39372)	4	FR	
-25	AN365-428	. NUT	2	FR	
-26	209-48254	. BRACKET ASSEMBLY, Wing fuel pressure relief valve to vent valve by-pass fitting	1	FR	
-27	2W18-416	. WASHER, Flat (NA) (89372)	3	FR	
-28	AN4-5A	. NUT	3	FR	
-29	209-48801-27	LINE ASSEMBLY, Wing fuel pressure relief valve to vent valve by-pass fitting	1	FR	
-30	AN833-12D	ELBOW	2	FR	
-31	AN924-12D	NUT	2	FR	
-32	MS29512-12	GASKET	2	FR	
-33	5-354-1	VALVE (SZT) (78423) (5-354-1 (SZT) (78423) together with MS21919DG24 is superseded by MC1621 (MCV) (76050) together with MS21919DG22)	1	FR	
-34	MC1621	VALVE (MCV) (76050) (MC-1621 (MCV) (76050) together with MS21919DG22 supersedes 5-354-1 (SZT) (78423) together with MS21919DG24 for future procurement)	1	FR	
-35	209-48801-99	LINE ASSEMBLY, Fuel vent manifold assembly to wing fuel pressure relief valve	1	FR	
-36	209-48801-229	LINE ASSEMBLY, Check valve to fuel vent manifold assembly	1	MZ	
	10B1-3-3-5	BONDING, Jumper (NA) (89372)	1	MZ	
-37	859A-8TT	VALVE (JAPC) (91816)	1	FR	
-38	MS29512-8	GASKET (2 used on ships coded MS)	1	FR	
-39	4-354-91	VALVE (SZT) (78423)	1	MZ	
-40	209-483168	BRACKET, Wing fuel air pressure valve assembly of	1	FR	
-41	AN3-11A	BOLT	2	MZ	
-42	2W18-10M	WASHER, Flat (NA) (89372)	2	MZ	
-43	NAS43DD3-26	SPACER	2	MZ	
-44	MS29512-8	GASKET	1	MZ	
-45	AN815-8D	UNION	1	MZ	
-46	209-48801-227	LINE ASSEMBLY, Union at station 115 to wing fuel air pressure valve	1	MZ	
-47	AN894D10-8	BUSHING	1	FR	
-48	MS29512-10	GASKET	1	FR	
-49	AN924-10D	NUT	1	FR	
-50	AN834-10D	TEE	1	FR	
-51	209-51803-3	TUBE ASSEMBLY, Heat and vent tee to anti "G" filter (see Electrical and Instrument)	1	FR	
-52	194-53443	DUCT ASSEMBLY, Heat and vent system windshield anti-ice station 128.375 to station 157 (see Heat and Vent System)	1	FR	
-53	209-48821-83	LINE ASSEMBLY, Wing fuel dump air supply to valve	1	MS	
-54	AN924-8D	NUT	1	MS	

AIR PRESSURE SYSTEM - APPLICABLE TO AIRCRAFT CODED (FR)

FIGURE & INDEX NO.	PART NUMBER	1 2 3 4 5 6 7	NOMENCLATURE	UNITS PER ASSY.	USABLE ON CODE	S/C NO.
94-55	AN833-8D		ELBOW	1	MS	
-56	209-48821-85		LINE ASSEMBLY, Wing fuel dump check valve to fuel vent manifold	1	MS	
-57	209-48801-165		TUBE, Wing tank dive vent forward fuselage fitting to manifold RH	1	FR	
-58	3655-24D		COUPLING (WIG) (79326)	1	FR	
	3601-24D-9		. WASHER (WIG) (79326)	2	FR	
	MS29513-325		PACKING	1	FR	
-59	209-48373-2		FITTING, Wing tank vent thru fuselage cell forward RH	1	FR	
	ATTACHING PARTS					
	AN4-5A		BOLT	3	FR	
	AN4H5A		BOLT	1	FR	
	2W18-416M		WASHER, Flat (NA) (89372)	4	FR	
	MS29513-228		PACKING	1	FR	
	---*---					
-60	N50-150S	*1	COUPLING (NUCA) (94581)	1	FR	
	RS-5-150	*1	SLEEVE (NUCA) (94581)	1	FR	
-61	209-48801-117		TUBE, Wing tank dive vent forward fuselage fitting to manifold LH	1	FR	
-62	3655-24D		COUPLING (WIG) (79326)	1	FR	
	3601-24D-9		. WASHER (WIG) (79326)	2	FR	
	MS29513-325		PACKING	1	FR	
-63	209-48373-1		FITTING, Wing tank vent thru fuselage cell forward LH	1	FR	
	ATTACHING PARTS					
	AN4-5A		BOLT	3	FR	
	AN4H5A		BOLT	1	FR	
	2W18-416M		WASHER, Flat (NA) (89372)	4	FR	
	MS29513-228		PACKING	1	FR	
	---*---					
-64	209-48377		LINE ASSEMBLY, Wing tank vent forward cell	1	FR	
-65	209-48136-1		FITTING, Fuel vent inboard wing LH (see figure 97 for breakdown)	1	FR	
	209-48136-2		FITTING, Fuel vent inboard wing RH (see figure 97 for breakdown)	1	FR	
-66	209-48821-3		LINE ASSEMBLY, Manifold to shutoff valve fuselage station 180.906 (150-gallon drop tank)	1	FR	
-67	AN833-6D		ELBOW	1	FR	
	AN924-6D		NUT	1	FR	
	MS29512-6		GASKET	1	FR	
-68	117235		VALVE (WTR) (79318)	1	FR	
	ATTACHING PARTS					
	AN3-20A		BOLT	2	FR	
	2W18-10		WASHER, Flat (NA) (89372)	4	FR	
	AN365-1032		NUT	2	FR	
	---*---					
-69	AN804-6D		TEE	1	FR	
	AN924-6D		NUT	1	FR	
	MS29512-6		GASKET	1	FR	
-70	209-48821-37		LINE ASSEMBLY, Tee to pressure regulator	1	FR	
-71	209-48821-1		LINE ASSEMBLY, Manifold to shutoff valve fuselage station 180.906 dump	1	FR	
-72	AN815-8D		UNION	1	FR	
	MS29512-8		GASKET	1	FR	
-73	8-1400		VALVE (SAHR) (96736)	1	FR	
	ATTACHING PARTS					
	AN3-23A		BOLT	2	FR	
	2W18-10M		WASHER, Flat (NA) (89372)	4	FR	
	AN365-1032		NUT	2	FR	
	---*---					
-74	AN837-8D		ELBOW	1	FR	
	AN924-8D		NUT	1	FR	
	MS29512-8		GASKET	1	FR	
-75	209-48821-15		LINE ASSEMBLY, Shutoff valve to orifice tee fitting	1	FR	
-76	209-48821-39		LINE ASSEMBLY, Air supply port to manifold	1	FR	
-77	AN832-6D		UNION	1	FR	
	AN924-6D		NUT	1	FR	
-78	209-48821-65		LINE ASSEMBLY, Check valve to bulkhead fitting station 180.906 air supply	1	FR	
-79	859A-6BB		VALVE (JAPC) (91816)	1	FR	
-80	AN815-6D		UNION	2	FR	
	MS29512-6		GASKET	2	FR	
-81	209-48821-63		LINE ASSEMBLY, Heat and vent line to check valve air supply	1	FR	
-82	AN833-6D		ELBOW	1	FR	
	AN924-6D		NUT	1	FR	
	MS29512-6		GASKET	1	FR	
-83	209-48821-5		LINE ASSEMBLY, Manifold to shutoff valve fuselage station 180.906 (200-gallon drop tank)	1	FR	
-84	209-48801-89		TUBE ASSEMBLY, Drop tank pressure regulator drain LH side upper	1	FR	
-85	AN919-6D		REDUCER	1	FR	
-86	209-48821-55		LINE ASSEMBLY, Reducer to tee (200-gallon drop tank)	1	FR	
-87	209-48821-57		LINE ASSEMBLY, Pressure regulator to bushing (200-gallon drop tank)	1	FR	
-88	209-48821-7		LINE ASSEMBLY, Tee fitting to union	1	FR	
-89	AN919-6D		REDUCER	1	FR	
-90	209-48801-37		TUBE ASSEMBLY, Drop tank pressure regulator to tee RH	1	FR	
-91	209-48821-47		LINE ASSEMBLY, Pressure regulator drain to tee fitting	1	FR	
-92	209-48821-49		LINE ASSEMBLY, Pressure regulator drain to tee fitting	1	FR	
-93	AN324-8D		TEE	1	FR	
-94	209-48821-19		LINE ASSEMBLY, Elbow to reducer	1	FR	
-95	209-48821-23		LINE ASSEMBLY, Check valve to orifice tee fitting	1	FR	
-96	209-48821-51		LINE ASSEMBLY, Tee fitting to bulkhead fitting	1	FR	

AIR PRESSURE SYSTEM - APPLICABLE TO AIRCRAFT CODED (FR)

FIGURE & INDEX NO.	PART NUMBER	1 2 3 4 5 6 7 NOMENCLATURE	UNITS PER ASSY.	USABLE ON CODE	S/C NO.
94-97	AN837-8D	ELBOW	1	FR	
	AN924-8D	NUT	1	FR	
-98	209-48821-41	LINE ASSEMBLY, Tee fitting to wing fitting	1	FR	
-99	209-48821-13	LINE ASSEMBLY, Pressure regulator to union	1	FR	
-100	AN815-8D	UNION	1	FR	
-101	209-48801-45	TUBE ASSEMBLY, Drop tank pressure regulator to wing RH side	1	FR	
-102	AN815-6D	UNION	1	FR	
-103	209-48821-71	LINE ASSEMBLY, 150 gallon drop tank air supply RH intermediate	1	FR	
-104	209-48821-43	LINE ASSEMBLY, Check valve to tee fitting	1	FR	
-105	209-48821-27	LINE ASSEMBLY, Pressure regulator to tee fitting	1	FR	
-106	AN783D8	TEE	1	FR	
-107	AN919-12D	REDUCER	1	FR	
-108	209-48821-31	LINE ASSEMBLY, Pressure regulator drain to tee fitting	1	FR	
-109	209-48821-35	LINE ASSEMBLY, Pressure regulator to wing fitting	1	FR	
-110	209-48821-25	LINE ASSEMBLY, Tee fitting to wing fitting	1	FR	
-111	209-48821-33	LINE ASSEMBLY, Pressure regulator drain to tee fitting	1	FR	
-112	AN824-8D	TEE	1	FR	
-113	209-48821-61	LINE ASSEMBLY, Tee to bulkhead fitting LH pressure regulator drain	1	FR	
-114	209-48821-73	LINE ASSEMBLY, Wing fuel scavenger pump air supply station 180.906 upper	1	PL	
-115	117235	VALVE (WTR) (79318)	1	PL	
	ATTACHING PARTS				
	209-48323-11	BRACKET, Wing scavenger pump air pressure valve	1	PL	
	AN3-20A	BOLT	2	PL	
	2W18-10M	WASHER, Flat (NA) (89372)	4	PL	
	AN365-1032	NUT	2	PL	
	---+---				
-116	AN815-6D	UNION	2	PL	
	MS29512-6	GASKET	2	PL	
-117	209-48821-75	LINE ASSEMBLY, Wing fuel scavenger pump air supply station 180.906 lower	1	PL	
-118	AN833-6D	ELBOW	1	PL	
	AN924-6D	NUT	1	PL	
	2W18-916	WASHER, Flat (NA) (89372)	1	PL	
-119	AN824-8D	TEE	1	PL	
-120	209-48821-77	LINE ASSEMBLY, Wing fuel scavenger pump air supply intermediate	1	PL	
-121	209-48821-79	LINE ASSEMBLY, Wing fuel scavenger pump air supply LH	1	PL	
-122	209-48821-81	LINE ASSEMBLY, Wing fuel scavenger pump air supply RH	1	PL	
-123	AN929-6	CAP	2	KZ	
-124	AN924-6D	NUT	2	KZ	
-125	MS29513-15	PACKING	2	KZ	
-126	AN832-6D	UNION	2	KZ	
-127	AN924-6D	NUT	2	LZ	
-128	MS29513-15	PACKING	2	LZ	
-129	AN833-6D	ELBOW	2	LZ	
-130	AN929-6	CAP	2	LZ	
-131	AN833-8D	ELBOW	1	FR	
	AN924-8D	NUT	1	FR	
-132	AN821-6D	ELBOW	1	FR	
-133	209-48802-43	LINE ASSEMBLY, Outboard drop tank air pressure inboard LH	1	FR	
-134	AN815-6D	UNION	2	FR	
-135	209-48802-63	LINE ASSEMBLY, Outboard drop tank air pressure inboard LH	1	FR	
-136	AN821-6D	ELBOW	1	FR	
-137	209-48802-45	LINE ASSEMBLY, Outboard drop tank air pressure LH	1	FR	
-138	209-43802-47	LINE ASSEMBLY, Outboard drop tank air pressure outboard LH	1	FR	
-139	AN815-8D	UNION	1	FR	
-140	209-48802-69	LINE ASSEMBLY, Inboard drop tank air pressure LH (supersedes 209-48802-39 for future procurement)	1	FR	
-141	AN821-6D	ELBOW	2	FR	
-142	209-48802-49	LINE ASSEMBLY, Outboard drop tank air pressure inboard RH	1	FR	
-143	AN815-6D	UNION	2	FR	
-144	209-48802-65	LINE ASSEMBLY, Outboard drop tank air pressure inboard RH	1	FR	
-145	AN821-6D	ELBOW	1	FR	
-146	209-48802-51	LINE ASSEMBLY, Outboard drop tank air pressure RH	1	FR	
-147	209-48802-53	LINE ASSEMBLY, Outboard drop tank air pressure outboard RH	1	FR	
-148	209-48802-41	LINE ASSEMBLY, Inboard drop tank air pressure RH	1	FR	
-149	AN833-4D	ELBOW	2	FR	
-150	AN924-4D	NUT	2	FR	
-151	MS29512-4	GASKET	2	FR	
-152	1354-526177	REGULATOR (PA) (45681) (for breakdown see Technical Manual NA 03-10AB-552)	2	FR	
	ATTACHING PARTS				
	AN3-4A	BOLT	6	FR	
	2W18-10M	WASHER, Flat (NA) (89372)	12	FR	
	AN365-1032	NUT	6	FR	
	---+---				
-153	MS29512-4	GASKET	2	FR	
-154	AN894D6-4	BUSHING	2	FR	
-155	MS29512-6	GASKET	2	FR	
-156	AN924-6D	NUT	2	FR	
-157	AN833-6D	ELBOW	2	FR	
-158	AN919-6D	REDUCER	2	FR	
-159	MS29512-4	GASKET	2	FR	
-160	1354-526177	REGULATOR (PA) (45681) (for breakdown see Technical Manual NA 03-10AB-552)	2	FR	
	ATTACHING PARTS				
	AN3-4A	BOLT	6	FR	

AIR PRESSURE SYSTEM - APPLICABLE TO AIRCRAFT CODED (FR)

FIGURE & INDEX NO.	PART NUMBER	1 2 3 4 5 6 7 NOMENCLATURE	UNITS PER ASSY.	USABLE ON CODE	S/C NO.
94	2W18-10M	WASHER, Flat (NA) (89372)	12	FR	
	AN365-1032	NUT	6	FR	
		---*---			
-161	MS29512-4	GASKET	2	FR	
-162	AN894D6-4	BUSHING	2	FR	
-163	MS29512-6	GASKET	2	FR	
-164	AN924-6D	NUT	2	FR	
-165	AN833-6D	ELBOW	2	FR	
-166	AN837-8D	ELBOW	1	FR	
-167	AN924-8D	NUT	1	FR	
-168	MS29512-8	GASKET	3	FR	
-169	AN815-8D	UNION	1	FR	
-170	181-48026	FITTING, Fuel drop tank air pressure line orifice	1	FR	
-171	1111-517703	VALVE (PA) (45681)	1	FR	
-172	117235	VALVE (WTR) (79318)	1	FR	
	ATTACHING PARTS				
	AN3-20A	BOLT	2	FR	
	2W18-10M	WASHER, Flat (NA) (89372)	4	FR	
	AN365-1032	NUT	2	FR	
		---*---			
-173	MS29512-6	GASKET	3	FR	
-174	AN783D6	TEE	1	FR	
-175	AN924-6D	NUT	1	FR	
-176	AN815-6D	UNION	1	FR	
-177	AN919-6D	REDUCER	1	FR	
-178	AN919-12D	REDUCER	1	FR	
-179	MS29512-8	GASKET	3	FR	
-180	AN938-8D	TEE	1	FR	
-181	AN815-8D	UNION	1	FR	
-182	1111-517703	VALVE (PA) (45681)	1	FR	
-183	AN815-6D	UNION	3	FR	
-184	MS29512-6	GASKET	4	FR	
-185	209-483181-11	MANIFOLD ASSEMBLY, Air supply	1	FR	
	ATTACHING PARTS				
	AN3-4A	BOLT	2	FR	
	2W1AL13-16-62	WASHER, Plain (NA) (89372)	4	FR	
		---*---			
	3591-3CNx-.285	INSERT, Heli-coil (AF) (91767)	2	FR	
-186	AN924-6D	NUT	1	FR	
-187	AN833-6D	ELBOW	1	FR	
-188	AN929-6	CAP	1	KZ	

NOTE: *1 N50-150S (NUCA) (94581) along with RS-5-150 (NUCA) (94581) supersedes CF14-150 (MAR) (98625), C11-11150 (MAR) (98625) and/or C11-21150 (MAR) (98625) for future procurement

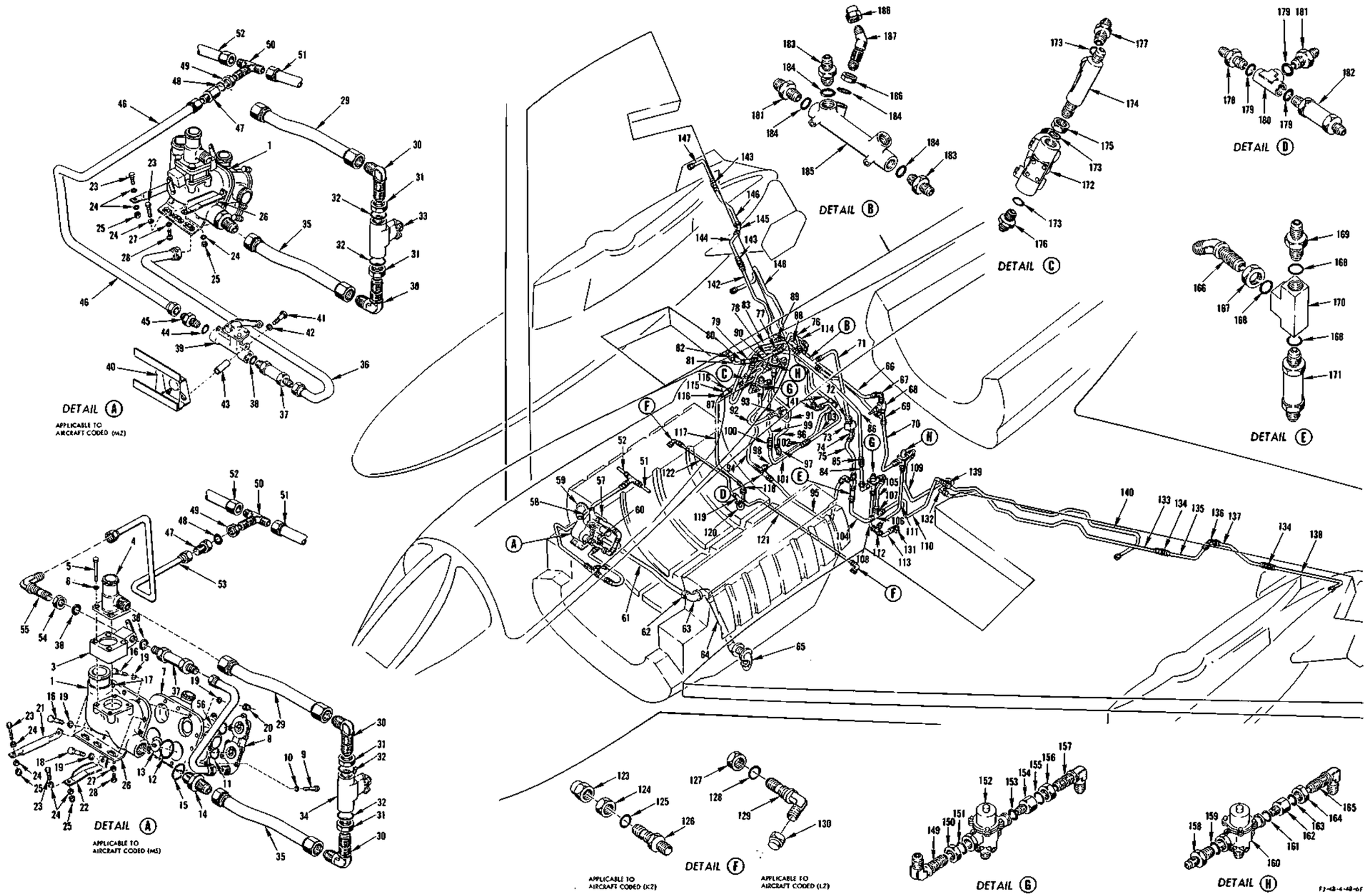

FIGURE 94 - AIR PRESSURE SYSTEM - APPLICABLE TO AIRCRAFT CODED (FR)

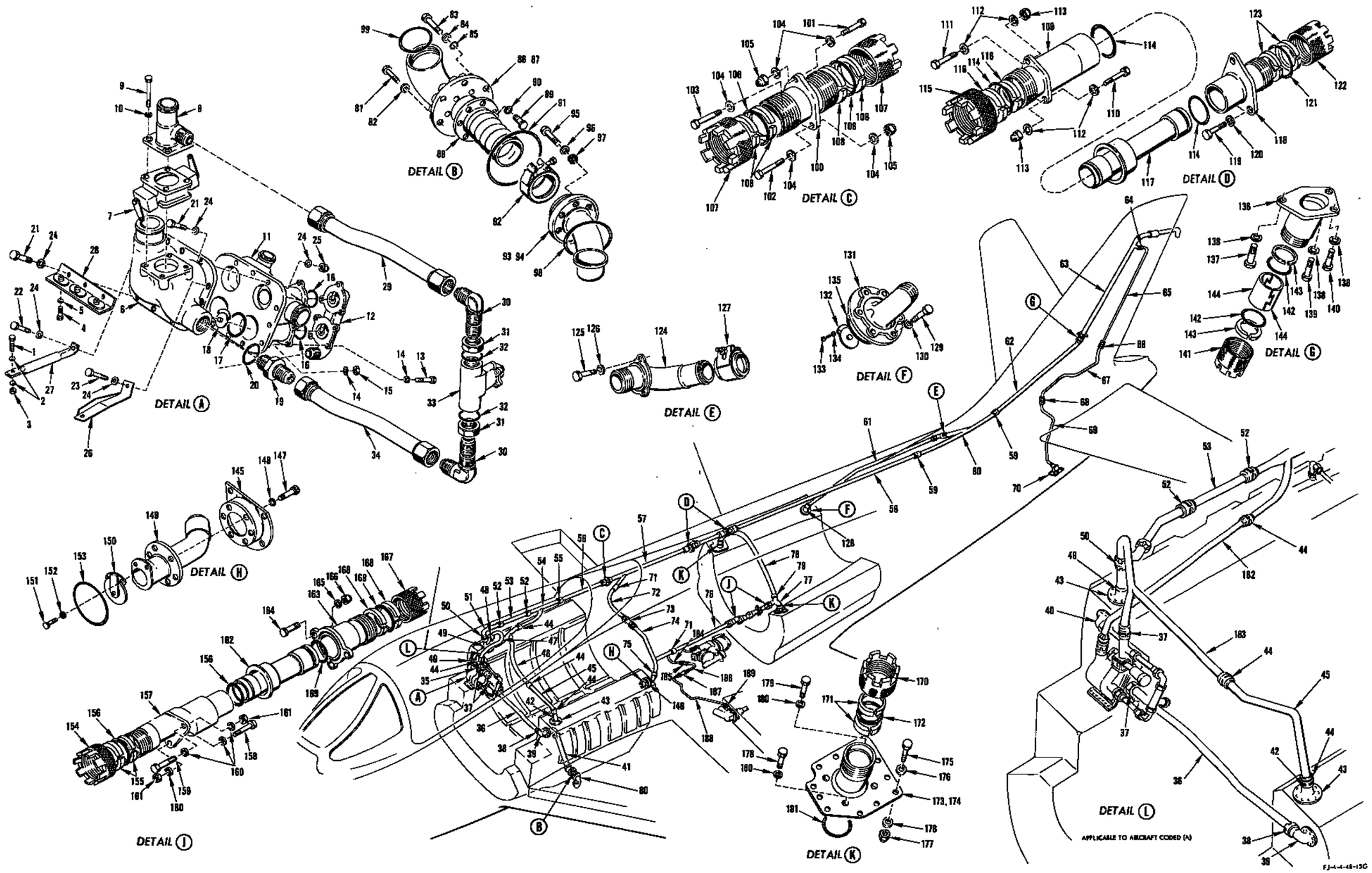

FIGURE 95 - VENT SYSTEM - APPLICABLE TO AIRCRAFT CODED (ET)

VENT SYSTEM - APPLICABLE TO AIRCRAFT CODED (ET)

FIGURE & INDEX NO.	PART NUMBER	1 2 3 4 5 6 7 NOMENCLATURE	UNITS PER ASSY.	USABLE ON CODE	S/C NO.
95	209-48251	MANIFOLD ASSEMBLY, Wing fuel tank venting and pressurizing (for breakdown see Technical Manual NAVAER 03-10ABN-505)	1	K	
	209-48251-11	MANIFOLD ASSEMBLY, Wing fuel tank venting and pressurizing (superseded by 209-48251-21 for future procurement) (for breakdown see Technical Manual NAVAER 03-10ABN-505)	1	JU	
	209-48251-21	MANIFOLD ASSEMBLY, Wing fuel tank venting and pressurizing (supersedes 209-48251-11 for future procurement)	1	JU	
-1	AN4-6A	BOLT	2	JU	
-2	2W18-416	WASHER, Flat (NA) (89372)	4	JU	
-3	AN365-428	NUT	2	JU	
-4	AN4-5A	BOLT	3	JU	
-5	2W18-416	WASHER, Flat (NA) (89372)	3	JU	
-6	209-48252-3	. MANIFOLD ASSEMBLY, Forward fuselage vent upper half	1	JU	
	1185-06CNx-.276	. . INSERT, Heli-coil (AF) (91767)	4	JU	
	RL28SB-8	. . RING (ROSN) (83324)	4	JU	
	RD206SB-6.5L	. . INSERT (ROSN) (83324)	4	JU	
-7	LH13301	. VALVE ASSEMBLY (Lourdes Hydraulics Inc.) (01178) (used on 209-48251-21 only) (supersedes LH1330 (Lourdes Hydraulics Inc. (01178) for future procurement)	1	JU	
-8	209-48309	. FITTING, Wing fuel vent valve by-pass	1	JU	
-9	AN4-22	. BOLT	4	JU	
-10	2W18-416M	. WASHER, Flat (NA) (89372)	4	JU	
-11	209-48253	. MANIFOLD ASSEMBLY, Fuel forward fuselage vent lower half	1	JU	
	1185-06CNx-.276	. . INSERT, Heli-coil (AF) (91767)	4	JU	
	RL28SB-8	. . RING (ROSN) (83324)	2	JU	
	RD206SB-6.5L	. . INSERT (ROSN) (83324)	2	JU	
-12	209-48310	. FITTING ASSEMBLY, Fuel wing air pressure swing check	1	JU	
	1211-517246	. . VALVE ASSEMBLY (PAET) (92003)	2	JU	
	1211-517115	. . PIN (PAET) (92003)	2	JU	
	8730-517251	. . SPRING (PAET) (92003)	2	JU	
	209-48311	. . FITTING, Fuel wing air pressure swing check	1	JU	
	209-48250	. . ORIFICE, Flow limiting wing tank dump	2	JU	
-13	AN4-7A	. BOLT	7	JU	
-14	2W18-416M	. WASHER, Flat (NA) (89372)	14	JU	
-15	AN365-428	. NUT	7	JU	
-16	MS29513-222	. PACKING	2	JU	
-17	MS29513-231	. PACKING	4	JU	
-18	MS29521-24	. VALVE (to be installed on 209-48252) (interchangeable with 37181 (KOE) (75361) or 6-2400 (SAHR) (96736)	2	JU	
	MS29521-20	. VALVE (to be installed on 209-48253) (interchangeable with 37181 (KOE) (75361) or 6-2000 (SAHR) (96736)	2	JU	
	ATTACHING PARTS				
	AN500A6-6	. SCREW	8	JU	
	2W1AL10-10-32	. WASHER, Plain (NA) (89372)	8	JU	
	---*---				
-19	AN815-12	. UNION	1	JU	
-20	MS29512-12	. GASKET	1	JU	
-21	AN4-10A	. BOLT	11	JU	
-22	AN4-11A	. BOLT	1	JU	
-23	AN4-5A	. BOLT	2	JU	
-24	2W18-416M	. WASHER, Flat (NA) (89372)	26	JU	
-25	AN365-428	. NUT	12	JU	
-26	209-48212	. BRACE, Fuel vent manifold support	1	JU	
-27	209-48327-2	. TUBE ASSEMBLY, Fuel vent manifold support RH	1	JU	
-28	209-48254	. BRACKET ASSEMBLY, Fuel vent support	1	JU	
-29	209-48801-27	LINE ASSEMBLY, Wing fuel pressure relief valve to vent valve by-pass fitting	1	ET	
-30	AN833-12D	ELBOW	2	ET	
-31	AN924-12D	NUT	2	ET	
-32	MS29512-12	GASKET	2	ET	
-33	5-354-1	VALVE (SZT) (82267)	1	ET	
-34	209-48801-25	LINE ASSEMBLY, Fuel vent manifold assembly to wing fuel pressure relief valve	1	K	
	209-48801-99	LINE ASSEMBLY, Fuel vent manifold assembly to wing fuel pressure relief valve	1	JU	
-35	209-48801-165	TUBE, Wing tank dive vent forward fuselage fitting to manifold RH	1	ET	
	CF14-150	COUPLING (MAR) (98625) (supersedes C11-11150 (MAR) (98625) and/or C11-21150 (MAR) (98625) for future procurement)	1	ET	
	3655-24D	COUPLING, Flexible half (WIG) (79326)	1	ET	
	3605-24D-3	. NUT, Coupling (WIG) (79326)	1	ET	
	3601-24D-9	. WASHER, Coupling (WIG) (79326)	2	ET	
	MS29513-325	PACKING	1	ET	
-36	209-48801-117	TUBE, Wing tank dive vent forward fuselage fitting to manifold LH	1		
-37	CF14-150	COUPLING (MAR) (98625) (supersedes C11-11150 (MAR) (98625) and/or C11-21150 (MAR) (98625) for future procurement)	2	ET	
-38	3655-24D	COUPLING, Flexible half (WIG) (79326)	1	ET	
	3605-24D-3	. NUT, Coupling (WIG) (79326)	1	ET	
	3601-24D-9	. WASHER, Coupling (WIG) (79326)	2	ET	
	MS29513-325	PACKING	1	ET	
-39	209-48373-1	FITTING, Wing tank vent thru fuselage cell forward LH	1	ET	
-40	209-48373-2	FITTING, Wing tank vent thru fuselage cell forward RH	1	ET	
	ATTACHING PARTS				
	AN4-6A	BOLT	6	ET	
	AN4H5A	BOLT	2	ET	
	2W18-416	WASHER, Flat (NA) (89372)	8	ET	
	MS29513-228	PACKING	1	ET	
	---*---				

VENT SYSTEM - APPLICABLE TO AIRCRAFT CODED (ET)

FIGURE & INDEX NO.	PART NUMBER	1 2 3 4 5 6 7	NOMENCLATURE	UNITS PER ASSY.	USABLE ON CODE	S/C NO.
95-41	209-48377		LINE ASSEMBLY, Wing tank vent forward cell	2	ET	
-42	209-48237		FITTING, Fuel cell forward fuselage balance line RH	1	ET	
	ATTACHING PARTS					
	AN4-5A		BOLT	4	ET	
	MS29513-228		PACKING	1	ET	
	2W18-416M		WASHER, Flat (NA) (89372)	4	ET	
	---*---					
-43	209-48238		BRACKET, Forward fuselage fuel tank balance line	2	ET	
	ATTACHING PARTS					
	AN3-4A		BOLT	4	ET	
	2W18-10M		WASHER, Flat (NA) (89372)	8	ET	
	AN365-1032		NUT	4	ET	
	---*---					
-44	CF14-200		COUPLING (MAR) (98625) (supersedes C11-11200 (MAR) (98625) and/or C11-21200(MAR)(98625) for future procurement)	4	ET	
-45	209-48801-97		TUBE, Forward fuel cell cross over vent LH	1	ET	
-46	209-483133		TUBE ASSEMBLY, Wing tank dive vent manifold to main vent line	1	HD	
-47	209-483132		LINE ASSEMBLY, Forward fuselage fuel cell climb vent	1	HD	
-48	3605-40D		COUPLING, Flexible (WIG) (79326)	1	ET	
	3605-40D-3		. NUT, Coupling (WIG) (79326)	1	ET	
	3601-40D-9		. WASHER, Coupling (WIG) (79326)	2	ET	
	3605-40D-24		. RETAINER HALF, Coupling (WIG) (79326)	2	ET	
	3601-40D-1		. BODY, Coupling (WIG) (79326)	1	ET	
	MS29513-333		PACKING	2	ET	
-49	209-48280		FITTING ASSEMBLY, Fuel cell balance line and climb vent RH forward fuselage	1	ET	
	ATTACHING PARTS					
	AN4-5A		BOLT	6	ET	
	MS29513-240		PACKING	1	ET	
	2W18-416M		WASHER, Flat (NA) (89372)	6	ET	
	---*---					
	209-48236		BRACKET, Forward fuselage tank balance line and climb RH	2	ET	
	AN3-4		BOLT	4	ET	
	2W18-10M		WASHER, Flat (NA) (89372)	8	ET	
	AN365-1032		NUT	4	ET	
-50	3605-32D		COUPLING, Flexible (WIG) (79326)	1	ET	
	3605-32D-3		. NUT, Coupling (WIG) (79326)	1	ET	
	3601-32D-9		. WASHER, Coupling (WIG) (79326)	2	ET	
	3605-32D-24		. RETAINER HALF, Coupling (WIG) (79326)	2	ET	
	3601-32D-1		. BODY, Coupling (WIG) (79326)	1	ET	
	MS29513-329		PACKING	2	ET	
-51	209-48801-351		TUBE, Climb vent fitting to main vent line (supersedes 209-48801-115 for future procurement)	1	ET	
-52	CF14-200		COUPLING (MAR) (98625)(supersedes C11-11200 (MAR) (98625) and/or C11-21200(MAR)(98625) for future procurement)	2	ET	
-53	209-48801-195		TUBE, Climb vent fuselage station 131 to fuselage station 140	1	ET	
-54	209-48316		LINE ASSEMBLY, Main fuel vent station 146 to station 170	1	ET	
-55	CF14-250		COUPLING (MAR) (98625) (supersedes C11-11250 (MAR) (98625) and/or C11-21250 (MAR) (98625) for future procurement)	1	ET	
-56	209-48801-111		TUBE, Main fuel vent fuselage station 170 to station 188	1	ET	
-57	209-48312	*1	LINE, Main fuel vent fuselage station 188 to station 227.5	1	ET	
	209-48318	*1	LINE ASSEMBLY, Main fuel vent fuselage station 188 to station 227.5	1	ET	
-58	209-48807		LINE, Fuel vent fuselage break to dive vent "Y"	1	ET	
-59	CF14-250		COUPLING (MAR) (98625) (supersedes C11-11250 (MAR) (98625) and/or C11-21250 (MAR) (98625) for future procurement)	2	ET	
-60	209-48808		LINE ASSEMBLY, Fuel aft cell dive vent "Y"	1	ET	
-61	209-48803-3		LINE ASSEMBLY, Fuel aft fuselage cell dive vent	1	ET	
-62	209-48810		LINE ASSEMBLY, Fuel vent "Y" to vertical tail complete	1	ET	
	209-48809		. LINE ASSEMBLY, Fuel vent "Y" to vertical tail	1	ET	
-63	209-48805		LINE ASSEMBLY, Fuel vent outlet complete	1	ET	
	209-48806		. LINE ASSEMBLY, Fuel vent outlet	1	ET	
-64	AN815-6D		UNION	1	ET	
	MS29512-6		GASKET	1	ET	
-65	209-48803-5		LINE ASSEMBLY, Vertical tail main vent fuel drain	1	ET	
-66	AN815-6D		UNION	1	ET	
-67	209-48803-7		LINE ASSEMBLY, Vertical deck to fuel drain	1	ET	
-68	AN832-6		UNION	1	ET	
	AN924-6		NUT	1	ET	
	2W15-38-24-20		WASHER, Lock (NA) (89372)	1	ET	
-69	209-48803-9		LINE ASSEMBLY, Empennage deck to overboard fuel drain	1	ET	
-70	209-48408		FITTING ASSEMBLY, Fuel vent overboard drain	1	ET	
-71	CF14-150		COUPLING (MAR) (98625) (supersedes C11-11150 (MAR) (98625) and/or C11-21150 (MAR) (98625) for future procurement)	2	ET	
-72	209-48801-205	*1	LINE ASSEMBLY, Forward fuselage fuel cell dive vent	1	ET	
	209-48801-9	*1	LINE ASSEMBLY, Forward fuselage fuel cell dive vent check valve to main vent connection	1	ET	
-73	MS28885-24		VALVE (interchangeable with 1111-517708 (PAET) (92003) or 2-21234 (KOE) (75361)	1	ET	
-74	209-48258		TUBE ASSEMBLY, Forward fuel tank dive vent	1	ET	
-75	3655-24D		COUPLING, Flexible half (WIG) (79326)	1	ET	
	3605-24D-3		. NUT, Coupling (WIG) (79326)	1	ET	
	3601-24D-9		. WASHER, Coupling (WIG) (79326)	2	ET	
	MS29513-325		PACKING	1	ET	
-76	209-48801-107		TUBE, Aft fuselage fuel cell climb vent fuselage station 193 to station 227.5	1	ET	
-77	209-48812		LINE ASSEMBLY, Fuel aft fuselage cell climb vent	1	ET	

VENT SYSTEM - APPLICABLE TO AIRCRAFT CODED (ET)

FIGURE & INDEX NO.	PART NUMBER	1 2 3 4 5 6 7 NOMENCLATURE	UNITS PER ASSY.	USABLE ON CODE	S/C NO.
95-78	209-48803-12	LINE ASSEMBLY, Fuel aft fuselage cell climb vent crossover	1	ET	
-79	CF14-125	COUPLING (MAR) (98625) (supersedes C11-11125 (MAR) (98625) and/or C11-21150 (MAR) (98625) for future procurement)	1	ET	
-80	209-48331-4	ELBOW ASSEMBLY, Wing vent line forward fuselage cell LH	1	ET	
	209-48331	ELBOW ASSEMBLY, Wing vent line forward fuselage cell RH	1	ET	
	ATTACHING PARTS				
-81	AN4-5A	BOLT	4	ET	
-82	2W18-416M	WASHER, Flat (NA) (89372)	4	ET	
-83	AN4-11A	BOLT	2	ET	
-84	2W18-416M	WASHER, Flat (NA) (89372)	2	ET	
-85	MS29513-10	PACKING	2	ET	
	---*---				
-86	209-48374-1	. ELBOW, Wing vent line forward fuselage cell LH	1	ET	
-87	209-48374-2	. ELBOW, Wing vent line forward fuselage cell RH	1	ET	
	1191-3CNx-.380	. . INSERT, Heli-coil (AF) (91767)	6	ET	
-88	91142	. BELLOWS ASSEMBLY (ARW) (91499)	1	ET	
-89	AN3H3A	. BOLT	6	ET	
-90	2W18-10M	. WASHER, Flat (NA) (89372)	6	ET	
-91	MS29513-237	PACKING	1	ET	
-92	4369-250S	COUPLING (MAR) (98625)	1	ET	
-93	209-48136-1	FITTING, Fuel vent inboard wing LH	1	ET	
-94	209-48136-2	FITTING, Fuel vent inboard wing RH	1	ET	
-95	AN4-11A	BOLT	8	ET	
-96	2W18-416M	WASHER, Flat (NA) (89372)	8	ET	
-97	600-015-1/4	STAT-O-SEAL (WFRC) (83259)	8	ET	
-98	MS29513-243	PACKING	1	ET	
-99	MS29513-222	PACKING	1	ET	
-100	209-48317	FITTING, Main fuel vent disconnect fuselage station 188	1	ET	
-101	AN3H6A	BOLT	1	ET	
-102	AN3H5A	BOLT	1	ET	
-103	AN3-5A	BOLT	1	ET	
-104	2W18-10M	WASHER, Flat (NA) (89372)	6	ET	
-105	AN365-1032	NUT	3	ET	
-106	MS29513-333	PACKING	2	ET	
	3655-40D	COUPLING, Flexible half (WIG) (79326)	2	ET	
-107	3605-40D-3	. NUT, Coupling (WIG) (79326)	2	ET	
-108	3601-40D-9	. WASHER, Coupling (WIG) (79326)	4	ET	
-109	209-48264	FITTING, Main fuel vent field break disconnect station 227.5	1	ET	
-110	AN3-5A	BOLT	2	ET	
-111	AN3H5A	BOLT	1	ET	
-112	2W18-10M	WASHER, Flat (NA) (89372)	6	ET	
-113	AN365-1032	NUT	3	ET	
-114	MS29513-333	PACKING	3	ET	
	3655-40D	COUPLING, Flexible half (WIG) (79326)	1	ET	
-115	3605-40D-3	. NUT, Coupling (WIG) (79326)	1	ET	
-116	3601-40D-9	. WASHER, Coupling (WIG) (79326)	2	ET	
-117	209-48811	TUBE ASSEMBLY, Fuel vent line disconnect	1	ET	
	AN960CU13	. WASHER	2	ET	
	9C1-2-5	. CHAIN, Safety and bead (NA) (89372)	1	ET	
-118	209-48415	FITTING, Fuel main vent field break disconnect	1	ET	
-119	AN3-5A	BOLT	3	ET	
-120	2W18-10M	WASHER, Flat (NA) (89372)	3	ET	
-121	MS29513-333	PACKING	2	ET	
	3655-40D	COUPLING, Flexible half (WIG) (79326)	1	ET	
-122	3605-40D-3	. NUT, Coupling (WIG) (79326)	1	ET	
-123	3601-40D-9	. WASHER, Coupling (WIG) (79326)	2	ET	
-124	209-48405	FITTING, Fuel drive vent fuselage station 331.5 bulkhead seal	1	ET	
	ATTACHING PARTS				
-125	AN3-4A	BOLT	2	ET	
	NAS221-8	SCREW	1	ET	
-126	2W17-10M	WASHER, Corrosion-resistant steel (NA) (89372)	3	ET	
-127	CF14-125	COUPLING (MAR) (98625) (supersedes C11-11125 (MAR) (98625)	1	ET	
	---*---				
-128	209-48406	FITTING ASSEMBLY, Fuel aft fuselage cell dive vent	1	ET	
	ATTACHING PARTS				
-129	AN4-10A	BOLT	6	ET	
-130	2W1AL18-24-51	WASHER, Plain (NA) (89372)	6	ET	
	---*---				
-131	209-48407	. FITTING, Aft fuselage cell dive vent fitting assembly	1	ET	
-132	1111-518112	. CHECK VALVE (PAET) (92003)	1	ET	
-133	AN515-6R4	. SCREW	2	ET	
-134	AN935-6L	. WASHER	2	ET	
-135	MS29513-231	PACKING	1	ET	
-136	209-48403	FITTING, Fuel vertical tail main vent attaching	1	ET	
-137	AN3-10A	BOLT	1	ET	
-138	2W18-416M	WASHER, Flat (NA) (89372)	3	ET	
-139	AN3H6A	BOLT	1	ET	
-140	AN3-6A	BOLT	1	ET	
-141	3605-32D-3	NUT, Coupling (WIG) (79326)	1	ET	
-142	MS29513-329	PACKING	2	ET	
-143	3601-32D-9	WASHER, Coupling (WIG) (79326)	2	ET	
-144	3605-32D-24	RETAINER HALF, Coupling (WIG) (79326)	2	ET	
-145	209-48241	BRACKET, Forward fuselage tank dive vent elbow	1	ET	

VENT SYSTEM - APPLICABLE TO AIRCRAFT CODED (ET)

FIGURE & INDEX NO.	PART NUMBER	1 2 3 4 5 6 7 NOMENCLATURE	UNITS PER ASSY.	USABLE ON CODE	S/C NO.
95-146	209-48239	ELBOW AND VALVE ASSEMBLY, Forward fuselage fuel tank dive vent	1	ET	
	ATTACHING PARTS				
-147	AN4-6A	BOLT	6	ET	
-148	2W18-416	WASHER, Flat (NA) (89372)	6	ET	
	---*---				
-149	209-48240	. ELBOW ASSEMBLY, Forward fuselage fuel tank dive vent	1	ET	
-150	MS29521-24	. VALVE ELEMENT (interchangeable with 37161 (KOE) (75361) or 6-2400 (SAHR) (96736)	1	ET	
-151	AN500A6-4	. SCREW	2	ET	
-152	2W18-8	. WASHER, Flat (NA) (89372)	2	ET	
-153	MS29513-231	PACKING	1	ET	
	3655-24D	COUPLING, Flexible half (WIG) (79326)	1	ET	
-154	3605-24D-3	. NUT, Coupling (WIG) (79326)	1	ET	
-155	3601-24D-9	. WASHER, Coupling (WIG) (79326)	2	ET	
-156	MS29513-325	PACKING	2	ET	
-157	209-48262	FITTING, Aft fuselage fuel tank climb vent field break disconnect	1	ET	
-158	AN4-6A	BOLT	1	ET	
-159	AN4H6A	BOLT	1	ET	
-160	2W18-416	WASHER, Flat (NA) (89372)	4	ET	
-161	AN365-428	NUT	2	ET	
-162	209-48259	TUBE ASSEMBLY, Fuselage fuel tank climb vent field break disconnect	1	ET	
	2W18-2	. WASHER, Flat (NA) (89372)	2	ET	
	9C1-2-5	. CHAIN, Safety and bead (NA) (89372)	1	ET	
-163	209-48424	FITTING, Fuel aft fuselage cell climb vent disconnect	1	ET	
-164	AN509-10R12	SCREW	3	ET	
-165	2W18-10M	WASHER, Flat (NA) (89372)	5	ET	
-166	AN365-1032	NUT	3	ET	
	3655-24D	COUPLING, Flexible half (WIG) (79326)	1	ET	
-167	3605-24D-3	. NUT, Coupling (WIG) (79326)	1	ET	
-168	3601-24D-9	. WASHER, Coupling (WIG) (79326)	2	ET	
-169	MS29513-325	PACKING	2	ET	
	3655-20D	COUPLING, Flexible half (WIG) (79326)	2	ET	
-170	3605-20D-3	. NUT, Coupling (WIG) (79326)	2	ET	
-171	3601-20D-3	. WASHER, Coupling (WIG) (79326)	2	ET	
-172	MS29513-218	PACKING	2	ET	
-173	209-48404-1	FITTING, Fuel aft fuselage cell climb vent LH	2	ET	
-174	209-48404-2	FITTING, Fuel aft fuselage cell climb vent RH	2	ET	
-175	AN3-5A	BOLT	24	ET	
-176	2W18-10M	WASHER, Flat (NA) (89372)	32	ET	
-177	AN365-1032	NUT	12	ET	
-178	AN4-11A	BOLT	6	ET	
-179	AN4H11A	BOLT	2	ET	
-180	2W18-416M	WASHER, Flat (NA) (89372)	8	ET	
-181	MS29513-222	PACKING	2	ET	
-182	209-48801-113	TUBE, Wing tank dive vent manifold to main vent line	1	A	
-183	209-48308	LINE ASSEMBLY, Fuel forward fuselage cell balance and wing climb vent	1	A	
-184	209-48801-243	LINE ASSEMBLY, Wing fuel transfer pump to inboard vent	1	ET	412
-185	AN919-10D	REDUCER	1	ET	412
-186	209-48801-249	LINE ASSEMBLY, Wing fuel transfer pump inboard vent (LH only)	1	ET	412
-187	209-482109	VALVE ASSEMBLY, Fuel air pressure system suction relief and fuel thermal expansion	1	ET	412
-188	209-48819	LINE ASSEMBLY, Wing fuel transfer pump vent (supersedes 209-48819-11 and 209-48819-21 for future procurement)	1	KK	412
	209-48819-11	LINE ASSEMBLY, Wing fuel transfer pump vent (superseded by 209-48819 for future procurement)	1	FW	412
-189	AN815-8D	UNION	1	ET	
	MS29512-8	GASKET	1	ET	

NOTE: *1 209-48312 together with 209-48801-205 supersedes 209-48318 together with 209-48801-9 for future procurement

REFUELING SYSTEM - APPLICABLE TO AIRCRAFT CODED (A)

FIGURE & INDEX NO.	PART NUMBER	1 2 3 4 5 6 7 NOMENCLATURE	UNITS PER ASSY.	USABLE ON CODE	S/C NO.
96		ATTACHING PARTS			
-42	AN520-10R8	SCREW	6	A	
-43	2W18-10M	WASHER, Flat (NA) (89372)	6	A	
		---*---			
-44	209-48431	FITTING ASSEMBLY, Fuel aft fuselage cell refueling unit complete	1	A	
		ATTACHING PARTS			
-45	AN4-5A	BOLT	6	A	
-46	2W18-416M	WASHER, Flat (NA) (89372)	6	A	
		---*---			
-47	209-48430	. FITTING ASSEMBLY, Fuel aft fuselage cell refueling inlet	1	A	
	RL18SB-6	. . RING (ROSN) (83324)	2	A	
	RD103SB-5L	. . INSERT (ROSN) (83324)	2	A	
-48	1111-518113	. VALVE ASSEMBLY (PAET) (92003)	2	A	
	AN515-6R4	. SCREW	2	A	
-49	MS29513-231	PACKING	1	A	
-50	MS28741-6-0334	HOSE ASSEMBLY	2	A	
-51	AN837-6D	ELBOW	2	A	
	MS29512-6	GASKET	2	A	
	AN924-6D	NUT	2	A	
-52	3-254-91	VALVE (SZT) (82267) (supersedes 3-254-1 (SZT) (82267) for future procurement)	1	A	
		ATTACHING PARTS			
-53	AN4-5A	BOLT	8	A	
-54	2W18-416M	WASHER, Flat (NA) (89372)	8	A	
-55	MS29513-253	PACKING	1	A	
		---*---			
-56	209-48290	BRACKET, Remote fuel level control float	1	A	
		ATTACHING PARTS			
-57	AN3-4A	BOLT	6	A	
-58	2W18-10M	WASHER, Flat (NA) (89372)	12	A	
-59	AN365-1032	NUT	6	A	
		---*---			
-60	209-48295	LINE ASSEMBLY, Defueling forward fuselage fuel cell	1	A	
	MS29513-222	PACKING	1	A	

VENT SYSTEM - APPLICABLE TO AIRCRAFT CODED (FR)

FIGURE & INDEX NO.	PART NUMBER	1 2 3 4 5 6 7 NOMENCLATURE	UNITS PER ASSY.	USABLE ON CODE	S/C NO.
97	209-48251-11	MANIFOLD ASSEMBLY, Wing fuel tank venting and pressurizing (superseded by 209-48251-21 for future procurement) (for breakdown see Technical Manual NAVAER 03-10ABN-505)	1	MZ	
	209-48251-21	MANIFOLD ASSEMBLY, Wing fuel tank venting and pressurizing (supersedes 209-48251-11 for future procurement)	1	MS	
-1	209-48252-3	. MANIFOLD ASSEMBLY, Fuel forward fuselage vent upper half	1	FR	
	1185-06CNx-.276	. . INSERT, Heli-coil (AF) (91767)	4	FR	
	RL28SB-8	. . RING (ROSN) (83324)	4	FR	
	RD296SB-6.5L	. . INSERT (ROSN) (83324)	4	FR	
-2	LH13301	. VALVE ASSEMBLY (Lourdes Hydraulics Inc) (01178) (supersedes LH1330 (Lourdes Hydraulics Inc) (01178) for future procurement) (used on 209-48251-21 only)	1	PX	
	LH1330	. VALVE ASSEMBLY (Lourdes Hydraulics Inc) (01178) (superseded by LH13301 (Lourdes Hydraulics Inc) (01178) for future procurement) (used on 209-48251-21 only)	1	PW	
-3	209-48309	. FITTING, Wing fuel vent valve by-pass	1	FR	
	ATTACHING PARTS				
-4	AN4-22	. BOLT	4	FR	
-5	2W18-416M	. WASHER, Flat (NA) (89372)	4	FR	
	---*---				
-6	209-48253	. MANIFOLD ASSEMBLY, Fuel forward fuselage vent lower half	1	FR	
	1185-06CNx-.276	. . INSERT, Heli-coil (AF) (91767)	4	FR	
	RL28SB-8	. . RING (ROSN) (83324)	2	FR	
	RD206SB-6.5L	. . INSERT (ROSN) (83324)	2	FR	
-7	209-48310	. FITTING ASSEMBLY, Fuel wing air pressure swing check	1	FR	
	1211-517246	. . VALVE ASSEMBLY (PAET) (92003)	2	FR	
	1211-517115	. . PIN (PAET) (92003)	2	FR	
	8730-517251	. . SPRING (PAET) (92003)	2	FR	
	209-48311	. . FITTING, Fuel wing air pressure swing check	1	FR	
	209-48250	. . ORIFICE, Flow limiting wing tank pump	2	FR	
-8	AN4-7A	. BOLT	7	FR	
-9	2W18-416M	. WASHER, Flat (NA) (89372)	14	FR	
-10	AN365-428	. NUT	7	FR	
-11	MS29513-222	. PACKING	2	FR	
-12	MS29513-231	. PACKING	4	FR	
-13	MS29521-24	. VALVE (to be installed on 209-48253) (interchangeable with 37161 (KOE) (75361) or 6-2400 (SAHR) (96736)	2	FR	
	MS29521-20	. VALVE (to be installed on 209-48253) (interchangeable with 37181 (KOE) (75361) or 6-2000 (SAHR) (96736)	2	FR	
	ATTACHING PARTS				
	AN500A6-6	. SCREW	8	FR	
	2W1AL10-10-32	. WASHER, Plain (NA) (89372)	8	FR	
	---*---				
-14	AN815-12	. UNION	1	FR	
-15	AN4-10A	. BOLT	11	FR	
-16	AN4-11A	. BOLT	1	FR	
-17	AN4-5A	. BOLT	2	FR	
-18	2W18-416M	. WASHER, Flat (NA) (89372)	28	FR	
-19	AN365-428	. NUT	14	FR	
-20	209-48212	. BRACE, Fuel vent manifold support	1	FR	
-21	209-48327-2	. TUBE ASSEMBLY, Fuel vent manifold support RH	1	FR	
-22	209-48254	. BRACKET ASSEMBLY, Fuel vent support	1	FR	
-23	MS29512-12	. GASKET	1	FR	
-24	209-48801-27	LINE ASSEMBLY, Wing fuel pressure relief valve to vent valve by-pass fitting	1	FR	
-25	AN833-12D	ELBOW	2	FR	
-26	AN924-12D	NUT	2	FR	
-27	MS29512-12	GASKET	2	FR	
-28	MC1621	VALVE (MCV) (76050) (MC1621 (MCV) (76050) together with MS21919DG22 supersedes 5-354-1 (SZT) (82267) together with MS21919DG24 for future procurement)	1	KY	
	5-354-1	VALVE (SZT) (82267) (5-354-1 (SZT) (82267) together with MS 21919DG24 is superseded by MC1621 (MCV) (76050) together with MS21919DG22 for future procurement)	1	LE	
-29	209-48801-99	LINE ASSEMBLY, Fuel vent manifold assembly to wing fuel pressure relief valve	1	FR	
-30	209-48801-165	TUBE, Wing tank dive vent forward fuselage fitting to manifold RH	1	FR	
	3605-24D	COUPLING, Flexible (WIG) (79326)	1	FR	
	3605-24D-3	. NUT, Coupling (WIG) (79326)	1	FR	
	3601-24D-9	. WASHER, Coupling (79326)	2	FR	
	3605-24D-24	. RETAINER HALF, Coupling (WIG) (79326)	2	FR	
	3601-24D-1	. BODY, Coupling (WIG) (79326)	1	FR	
	MS29513-325	PACKING	2	FR	
-31	CF14-150	COUPLING (MAR) (98625) (supersedes C11-21150 (MAR) (98625) and/or C11-11150 (MAR) (98625) for future procurement)	2	FR	
-32	209-48801-117	TUBE, Wing tank dive vent forward fuselage fitting to manifold LH	1	FR	
-33	3655-24D	COUPLING, Flexible half (WIG) (79326)	2	FR	
	3605-24D-3	. NUT, Coupling (WIG) (79326)	1	FR	
	3601-24D-9	. WASHER, Coupling (WIG) (79326)	2	FR	
	MS29513-325	PACKING	2	FR	
-34	209-48373-1	FITTING, Wing tank vent thru fuselage cell forward LH	1	FR	
	ATTACHING PARTS				
	AN4-5A	BOLT	3	FR	
	AN4H5A	BOLT	1	FR	
	2W18-416M	WASHER, Flat (NA) (89372)	4	FR	

VENT SYSTEM - APPLICABLE TO AIRCRAFT CODED (FR)

FIGURE & INDEX NO.	PART NUMBER	1 2 3 4 5 6 7 NOMENCLATURE	UNITS PER ASSY.	USABLE ON CODE	S/C NO.
97	MS29513-228	PACKING	1	FR	
		---*---			
-35	209-48373-2	FITTING, Wing tank vent thru fuselage cell forward RH	1	FR	
	ATTACHING PARTS				
	AN4-5A	BOLT	3	FR	
	AN4H5A	BOLT	1	FR	
	2W18-416M	WASHER, Flat (NA) (89372)	4	FR	
	MS29513-228	PACKING	1	FR	
		---*---			
-36	209-48377	LINE ASSEMBLY, Wing tank vent forward fuselage cell	2	FR	
-37	209-48237	FITTING, Fuel cell forward fuselage balance line LH	1	FR	
	ATTACHING PARTS				
	AN4-5A	BOLT	4	FR	
	MS29513-228	PACKING	1	FR	
	2W18-416M	WASHER, Flat (NA) (89372)	4	FR	
		---*---			
-38	209-48238	BRACKET, Forward fuselage fuel tank balance line LH	2	FR	
	ATTACHING PARTS				
	AN3-4A	BOLT	4	FR	
	2W18-10M	WASHER, Flat (NA) (89372)	8	FR	
	AN365-1032	NUT	4	FR	
		---*---			
-39	CF14-200	COUPLING (MAR) (98625) (supersedes C11-21200 (MAR) (98625) and/or C11-11200 (MAR) (98625) for future procurement)	1	FR	
-40	209-48801-97	TUBE, Forward fuel cell crossover vent LH	1	FR	
-41	CF14-200	COUPLING (MAR) (98625) (supersedes C11-21200 (MAR) (98625) and/or C11-11200 (MAR) (98625) for future procurement)	1	FR	
-42	209-483133	TUBE ASSEMBLY, Wing tank dive vent manifold to main vent line	1	FR	
-43	CF14-200	COUPLING (MAR) (98625) (supersedes C11-21200 (MAR) (98625) and/or C11-11200 (MAR) (98625) for future procurement)	1	FR	
-44	209-483132	LINE ASSEMBLY, Forward fuselage fuel cell climb vent	1	FR	
-45	3605-40D	COUPLING, Flexible (WIG) (79326)	1	FR	
	3605-40D-3	. NUT, Coupling (WIG) (79326)	1	FR	
	3601-40D-9	. WASHER, Coupling (WIG) (79326)	2	FR	
	3605-40D-24	. RETAINER HALF, Coupling (WIG) (79326)	2	FR	
	3601-40D-1	. BODY, Coupling (WIG) (79326)	1	FR	
	MS29513-333	PACKING	2	FR	
-46	209-48280	FITTING ASSEMBLY, Fuel cell balance line and climb vent RH forward fuselage	1	FR	
	ATTACHING PARTS				
	AN4-5A	BOLT	6	FR	
	MS29513-240	PACKING	1	FR	
	2W18-416M	WASHER, Flat (NA) (89372)	6	FR	
		---*---			
	209-48236	BRACKET, Forward fuselage fuel tank balance line and climb RH	2	FR	
	ATTACHING PARTS				
	AN3-4A	BOLT	4	FR	
	2W18-10M	WASHER, Flat (NA) (89372)	8	FR	
	AN365-1032	NUT	4	FR	
		---*---			
-47	3604-32D	COUPLING, Flexible (WIG) (79326)	1	FR	
	3605-32D-3	. NUT, Coupling (WIG) (79326)	1	FR	
	3601-32D-9	. WASHER, Coupling (WIG) (79326)	2	FR	
	3605-32D-24	. RETAINER HALF, Coupling (WIG) (79326)	2	FR	
	3601-32D-1	. BODY, Coupling (WIG) (79326)	1	FR	
	MS29513-329	PACKING	2	FR	
-48	209-48801-351	TUBE, Climb vent fitting to main vent line (supersedes 209-48801-115 for future procurement)	1	FR	
-49	CF14-200	COUPLING (MAR) (98625) (supersedes C11-21200 (MAR) (98625) and/or C11-11200 (MAR) (98625) for future procurement)	1	FR	
-50	209-48801-195	TUBE, Climb vent fuselage station 131 to fuselage station 140	1	FR	
-51	CF14-200	COUPLING (MAR) (98625) (supersedes C11-21200 (MAR) (98625) and/or C11-11200 (MAR) (98625) for future procurement)	1	FR	
-52	209-48316	LINE ASSEMBLY, Main fuel vent station 146 to station 170	1	FR	
-53	G51H-B	GROMMET (Nylon Molding Corp)	2	FR	
-54	CF14-250	COUPLING (MAR) (98625) (supersedes C11-11250 (MAR) (98625) for future procurement)	1	FR	
-55	209-48801-111	TUBE, Main fuel vent fuselage station 170 to station 188	1	FR	
-56	209-48312	LINE, Main fuel vent fuselage station 188 to station 227.5	1	FR	
-57	209-48807	LINE, Fuel vent fuselage break to dive vent "Y"	1	FR	
-58	CF14-250	COUPLING (MAR) (98625) (supersedes C11-11250 (MAR) (98625) for future procurement)	1	FR	
-59	209-48808	LINE ASSEMBLY, Fuel aft cell dive vent "Y"	1	FR	
-60	CF14-250	COUPLING (MAR) (98625) (supersedes C11-11250 (MAR) (98625) for future procurement)	1	FR	
-61	209-48803-3	LINE ASSEMBLY, Fuel aft fuselage cell dive vent	1	FR	
-62	209-48810	LINE ASSEMBLY, Fuel vent "Y" to vertical tail complete	1	FR	
	209-48809	. LINE ASSEMBLY, Fuel vent "Y" to vertical tail	1	FR	
-63	209-48805	LINE ASSEMBLY, Fuel vent outlet complete	1	FR	
	209-48806	. LINE ASSEMBLY, Fuel vent outlet	1	FR	
-64	AN815-6D	UNION	1	FR	
	MS29512-6	GASKET	1	FR	
-65	209-48803-5	LINE ASSEMBLY, Vertical tail main vent fuel drain	1	FR	
-66	AN815-6D	UNION	1	FR	

VENT SYSTEM - APPLICABLE TO AIRCRAFT CODED (FR)

FIGURE & INDEX NO.	PART NUMBER	1 2 3 4 5 6 7 NOMENCLATURE	UNITS PER ASSY.	USABLE ON CODE	S/C NO.
97-67	209-48803-7	LINE ASSEMBLY, Vertical to deck fuel drain	1	FR	
-68	AN832-6	UNION	1	FR	
	AN924-6	NUT	1	FR	
	2W15-38-24-20	WASHER, Lock (NA) (89372)	1	FR	
-69	209-48803-15	LINE ASSEMBLY, Empennage deck to overboard fuel drain	1	FR	
-70	209-48408	FITTING ASSEMBLY, Fuel vent overboard drain	1	FR	
-71	CF14-150	COUPLING (MAR) (98625) (supersedes C11-21150 (MAR) (98625) and/or C11-11150 (MAR) (98625) for future procurement)	2	FR	
-72	209-48801-205	TUBE ASSEMBLY, Forward fuselage fuel cell dive vent	1	MD	
-73	209-48801-261	TUBE ASSEMBLY, Forward fuselage fuel cell dive vent	1	ME	
-74	MS28885-24	VALVE, Check (interchangeable with 1111-517708 (PAET) (92003) or 2-21234 (KOE) (75361)	1	MD	
-75	AN815-24D	UNION	1	ME	
-76	209-48258	TUBE ASSEMBLY, Forward fuselage fuel tank dive vent	1	FR	
-77	3655-24D	COUPLING, Flexible half (WIG) (79326)	1	FR	
	3605-24D-3	. NUT, Coupling (WIG) (79326)	1	FR	
	3601-24D-9	. WASHER, Coupling (WIG) (79326)	2	FR	
	MS29513-325	PACKING	1	FR	
-78	CF14-125	COUPLING (MAR) (98625) (supersedes C11-11125 (MAR) (98625) and/or C11-21125 (MAR) (98625) for future procurement)	1	FR	
-79	209-48801-107	TUBE, Aft fuselage fuel cell climb vent fuselage station 193 to station 227.5	1	FR	
-80	209-48812	LINE ASSEMBLY, Fuel aft fuselage cell climb vent	1	FR	
-81	209-48803-12	LINE, Fuel aft fuselage cell climb vent crossover	1	MD	
-82	209-48803-18	LINE, Fuel aft fuselage cell climb vent crossover	1	ME	
-83	MS29513-222	PACKING	1	FR	
	209-48331-3	ELBOW ASSEMBLY, Wing vent line forward fuselage cell LH	1	FR	
	209-48331-4	ELBOW ASSEMBLY, Wing vent line forward fuselage cell RH	1	FR	
	ATTACHING PARTS				
-84	AN4-5A	BOLT	4	FR	
-85	2W18-416M	WASHER, Flat (NA) (89372)	4	FR	
-86	AN4-11A	BOLT	2	FR	
-87	2W18-416M	WASHER, Flat (NA) (89372)	2	FR	
-88	MS29513-10	PACKING	2	FR	
	---*---				
-89	209-48374-1	. ELBOW, Wing vent line forward fuselage cell LH	1	FR	
-90	209-48374-2	. ELBOW, Wing vent line forward fuselage cell RH	1	FR	
	1191-3CNx-.380	. . INSERT, Heli-coil (AF) (91767)	6	FR	
-91	91142	. BELLOWS ASSEMBLY (ARW) (91499) (supersedes 91050 (ARW) (91499) for future procurement)	1	FR	
	ATTACHING PARTS				
-92	AN3H3A	. BOLT	6	FR	
-93	2W18-10M	. WASHER, Flat (NA) (89372)	6	FR	
	---*---				
-94	MS29513-237	PACKING	1	FR	
-95	4369-250S	COUPLING (MAR) (98625)	1	FR	
-96	209-48136-1	FITTING, Fuel vent inboard wing LH	1	FR	
-97	209-48136-2	FITTING, Fuel vent inboard wing RH	1	FR	
	ATTACHING PARTS				
-98	AN4-11A	BOLT	8	FR	
-99	2W18-416M	WASHER, Flat (NA) (89372)	8	FR	
-100	600-015-1/4	STAT-O-SEAL (WFRC) (83259)	8	FR	
	---*---				
-101	MS29513-243	PACKING	1	FR	
-102	209-48317	FITTING, Main fuel vent disconnect fuselage station 188	1	FR	
	ATTACHING PARTS				
-103	AN3H6A	BOLT	1	FR	
-104	AN3H5A	BOLT	1	FR	
-105	AN3-5A	BOLT	1	FR	
-106	2W18-10M	WASHER, Flat (NA) (89372)	6	FR	
-107	AN365-1032	NUT	3	FR	
	---*---				
-108	MS29513-333	PACKING	2	FR	
	3655-40D	COUPLING, Flexible half (WIG) (79326)	2	FR	
-109	3605-40D-3	. NUT, Coupling (WIG) (79326)	2	FR	
-110	3601-40D-9	. WASHER, Coupling (WIG) (79326)	4	FR	
-111	209-48264	FITTING, Main fuel vent field break disconnect station 227.5	1	FR	
	ATTACHING PARTS				
-112	AN3H5A	BOLT	1	FR	
-113	AN3-5A	BOLT	2	FR	
-114	2W18-10M	WASHER, Flat (NA) (89372)	6	FR	
-115	AN365-1032	NUT	3	FR	
	---*---				
-116	MS29513-333	PACKING	3	FR	
	3655-40D	COUPLING, Flexible half (WIG) (79326)	1	FR	
-117	3605-40D-3	. NUT, Coupling (WIG) (79326)	1	FR	
-118	3601-40D-9	. WASHER, Coupling (WIG) (79326)	2	FR	
-119	209-48811	TUBE ASSEMBLY, Fuel vent line disconnect	1	FR	
	AN960CV13	. WASHER	2	FR	
	9C1-2-5	. CHAIN, Safety (NA) (89372)	1	FR	
-120	209-48415	FITTING, Fuel main vent field break disconnect	1	FR	
	ATTACHING PARTS				
-121	AN3-5A	BOLT	3	FR	
-122	2W18-10M	WASHER, Flat (NA) (89372)	3	FR	
	---*---				

VENT SYSTEM - APPLICABLE TO AIRCRAFT CODED (FR)

FIGURE & INDEX NO.	PART NUMBER	1 2 3 4 5 6 7 NOMENCLATURE	UNITS PER ASSY.	USABLE ON CODE	S/C NO.
97-123	MS29513-333	PACKING	1	FR	
	3655-40D	COUPLING, Flexible half (WIG) (79326)	1	FR	
-124	3605-40D-3	. NUT, Coupling (WIG) (79326)	1	FR	
-125	3601-40D-9	. WASHER, Coupling (WIG) (79326)	2	FR	
-126	209-48405	FITTING, Fuel dive vent fuselage station 331.5 bulkhead seal	1	FR	
	ATTACHING PARTS				
-127	AN3-4A	BOLT	2	FR	
	NAS221-8	SCREW	1	FR	
-128	2W17-10M	WASHER, Corrosion-resistant steel (NA) (89372)	3	FR	
	---*---				
-129	CF14-125	COUPLING (MAR) (98625) (supersedes C11-11125 (MAR) (98625) and/or C11-21125 (MAR) (98625) for future procurement)	1	FR	
	209-48406	FITTING ASSEMBLY, Fuel aft fuselage cell dive vent	1	FR	
	ATTACHING PARTS				
-130	AN4-10A	BOLT	6	FR	
-131	2W1AL18-24-51	WASHER, Plain (NA) (89372)	6	FR	
	---*---				
-132	209-48407	. FITTING, Aft fuselage cell dive vent fitting assembly	1	FR	
-133	1111-518112	. CHECK VALVE (PAET) (92003)	1	FR	
	ATTACHING PARTS				
-134	AN515-6R4	. SCREW	2	FR	
-135	AN935-6L	. WASHER	2	FR	
	---*---				
-136	MS29513-231	PACKING	1	FR	
-137	209-48403	FITTING, Fuel vertical tail main vent attaching	1	FR	
	ATTACHING PARTS				
-138	AN3-10A	BOLT	1	FR	
-139	2W18-10M	WASHER, Flat (NA) (89372)	1	FR	
-140	AN3H6A	BOLT	1	FR	
-141	2W18-10	WASHER, Flat (NA) (89372)	2	FR	
-142	AN3-6A	BOLT	1	FR	
	---*---				
-143	3605-32D-3	NUT ASSEMBLY (WIG) (79326)	1	FR	
-144	MS29513-329	PACKING	2	FR	
-145	3601-32D-9	WASHER (WIG) (79326)	2	FR	
-146	3605-32D-24	RETAINER HALF (WIG) (79326)	2	FR	
	209-48239	ELBOW AND VALVE ASSEMBLY, Forward fuselage fuel tank dive vent	1	FR	
-147	209-48240	. ELBOW ASSEMBLY, Forward fuselage fuel tank dive vent	1	FR	
	1185-06CNx-.207	. . INSERT, Heli-coil (AF) (91767)	2	FR	
-148	MS29521-24	. VALVE ELEMENT (interchangeable with 37161 (KOE) (75361) or 6-2400 (SAHR)) (96736)	1	FR	
	ATTACHING PARTS				
-149	AN500A6-5	. SCREW	2	FR	
-150	2W18-8	. WASHER, Flat (NA) (89372)	2	FR	
	---*---				
-151	MS29513-231	PACKING	1	FR	
-152	209-48241	BRACKET, Forward fuselage tank dive vent elbow	1	FR	
	ATTACHING PARTS				
-153	AN4-6A	BOLT	6	FR	
-154	2W18-416	WASHER, Flat (NA) (89372)	6	FR	
	---*---				
	3655-24D	COUPLING, Flexible half (WIG) (79326)	1	FR	
-155	3605-24D-3	. NUT, Coupling (WIG) (79326)	1	FR	
-156	3601-24D-9	. WASHER, Coupling (WIG) (79326)	2	FR	
-157	MS29513-325	PACKING	1	FR	
-158	209-48262	FITTING, Aft fuselage fuel tank climb vent field break disconnect	1	FR	
	ATTACHING PARTS				
-159	AN4H6A	BOLT	1	FR	
-160	AN4-6A	BOLT	1	FR	
-161	2W18-416	WASHER, Flat (NA) (89372)	4	FR	
-162	AN365-428	NUT	2	FR	
	---*---				
-163	209-48259	TUBE ASSEMBLY, Fuselage fuel tank climb vent field break disconnect	1	FR	
	2W18-2	. WASHER, Flat (NA) (89372)	1	FR	
	9C1-2-5	. CHAIN, Safety (NA) (89372)	1	FR	
-164	MS29513-325	PACKING	2	FR	
-165	209-48424	FITTING, Fuel aft fuselage cell climb vent disconnect	1	FR	
	ATTACHING PARTS				
-166	AN509-10R12	SCREW	3	FR	
-167	2W18-10M	WASHER, Flat (NA) (89372)	3	FR	
-168	AN365-1032	NUT	3	FR	
	---*---				
	3655-24D	COUPLING, Flexible half (WIG) (79326)	1	FR	
-169	3605-24D-3	. NUT, Coupling (WIG) (79326)	1	FR	
-170	3601-24D-9	. WASHER, Coupling (WIG) (79326)	2	FR	
-171	MS29513-325	PACKING	1	FR	
	3655-20D	COUPLING (WIG) (79326)	1	FR	
-172	3605-20D-3	. NUT, Coupling (WIG) (79326)	1	FR	
-173	3601-20D-9	. WASHER, Coupling (WIG) (79326)	2	FR	
-174	MS29513-218	PACKING	1	FR	
-175	MS29513-222	PACKING	1	FR	
-176	209-48404-1	FITTING, Fuel aft fuselage cell climb vent LH	1	FR	
-177	209-48404-2	FITTING, Fuel aft fuselage cell climb vent RH	1	MD	

VENT SYSTEM - APPLICABLE TO AIRCRAFT CODED (FR)

FIGURE & INDEX NO.	PART NUMBER	1 2 3 4 5 6 7 NOMENCLATURE	UNITS PER ASSY.	USABLE ON CODE	S/C NO.
97		ATTACHING PARTS			
-178	AN3-5A	BOLT	12	FR	
-179	2W18-10M	WASHER, Flat (NA) (89372)	18	FR	
-180	AN365-1032	NUT	8	FR	
		---*---			
-181	AN4H11A	BOLT	1	FR	
-182	AN4-11A	BOLT	3	FR	
-183	2W18-416M	WASHER, Flat (NA) (89372)	4	FR	
	3655-20D	COUPLING, Flexible half (WIG) (79326)	1	ME	
-184	3605-20D-3	. NUT, Coupling (WIG) (79326)	1	ME	
-185	3601-20D-9	. WASHER, Coupling (WIG) (79326)	2	ME	
-186	MS29513-218	PACKING	1	ME	
-187	209-48409	FITTING, Fuel aft fuselage climb vent	1	ME	
		ATTACHING PARTS			
-188	AN4H5A	BOLT	1	ME	
-189	AN4-5A	BOLT	3	ME	
-190	2W18-416M	WASHER, Flat (NA) (89372)	4	ME	
		---*---			
-191	MS29513-232	PACKING	1	ME	
-192	209-483241	FITTING, Fuel aft fuselage cell climb vent RH side	1	ME	
		ATTACHING PARTS			
-193	AN3-5A	BOLT	12	ME	
-194	2W18-10M	WASHER, Flat (NA) (89372)	18	ME	
-195	AN365-1032	NUT	6	ME	
		---*---			
	3585-2CNx-.246	. INSERT, Heli-coil (AF) (91767)	1	ME	
	3591-4CNx-.500	. INSERT, Heli-coil (AF) (91767)	4	ME	
-196	MS29513-222	PACKING	1	ME	
-197	209-543203	SWITCH ASSEMBLY, Electrical shutoff valve control float (see Electrical and Instrument)	1	ME	
		ATTACHING PARTS			
-198	AN4-11A	BOLT	4	ME	
-199	2W18-416M	WASHER, Flat (NA) (89372)	4	ME	
		---*---			
-200	MS29513-222	PACKING	1	ME	
-201	209-48821-59	LINE ASSEMBLY, Wing fuel transfer pump to inboard vent	1	FR	412
-202	AN815-8D	UNION	1	FR	412
-203	209-48821-67	LINE ASSEMBLY, Wing fuel transfer pump to inboard vent	1	FR	412
-204	209-482109	VALVE ASSEMBLY, Fuel air pressure system suction relief and fuel thermal expansion	1	FR	412
-205	209-48819	LINE ASSEMBLY, Wing fuel transfer pump vent	1	FR	412
-206	AN815-8D	UNION	1	FR	
	MS29512-8	PACKING	1	FR	

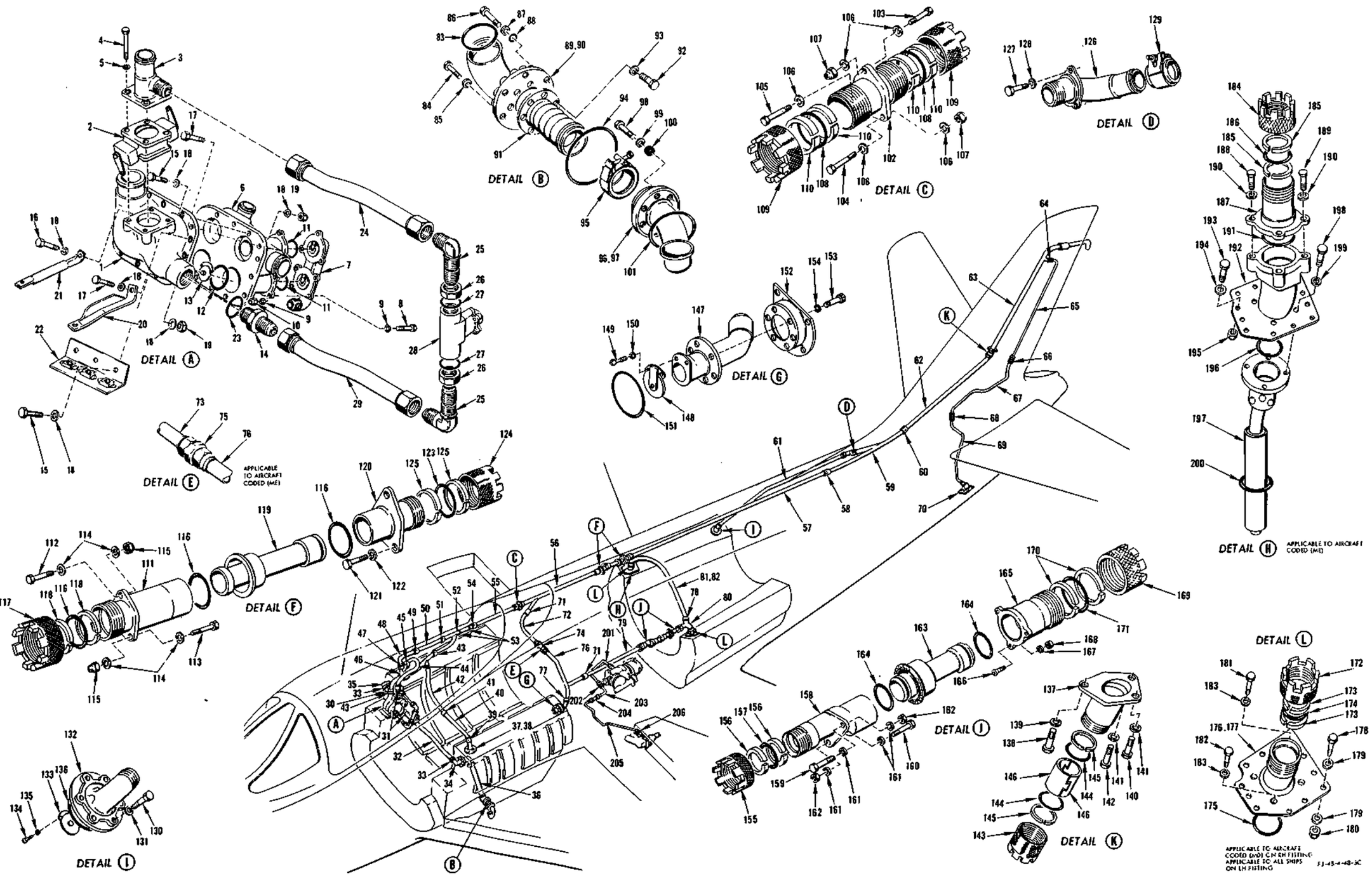

FIGURE 97 - VENT SYSTEM - APPLICABLE TO AIRCRAFT CODED (FR)

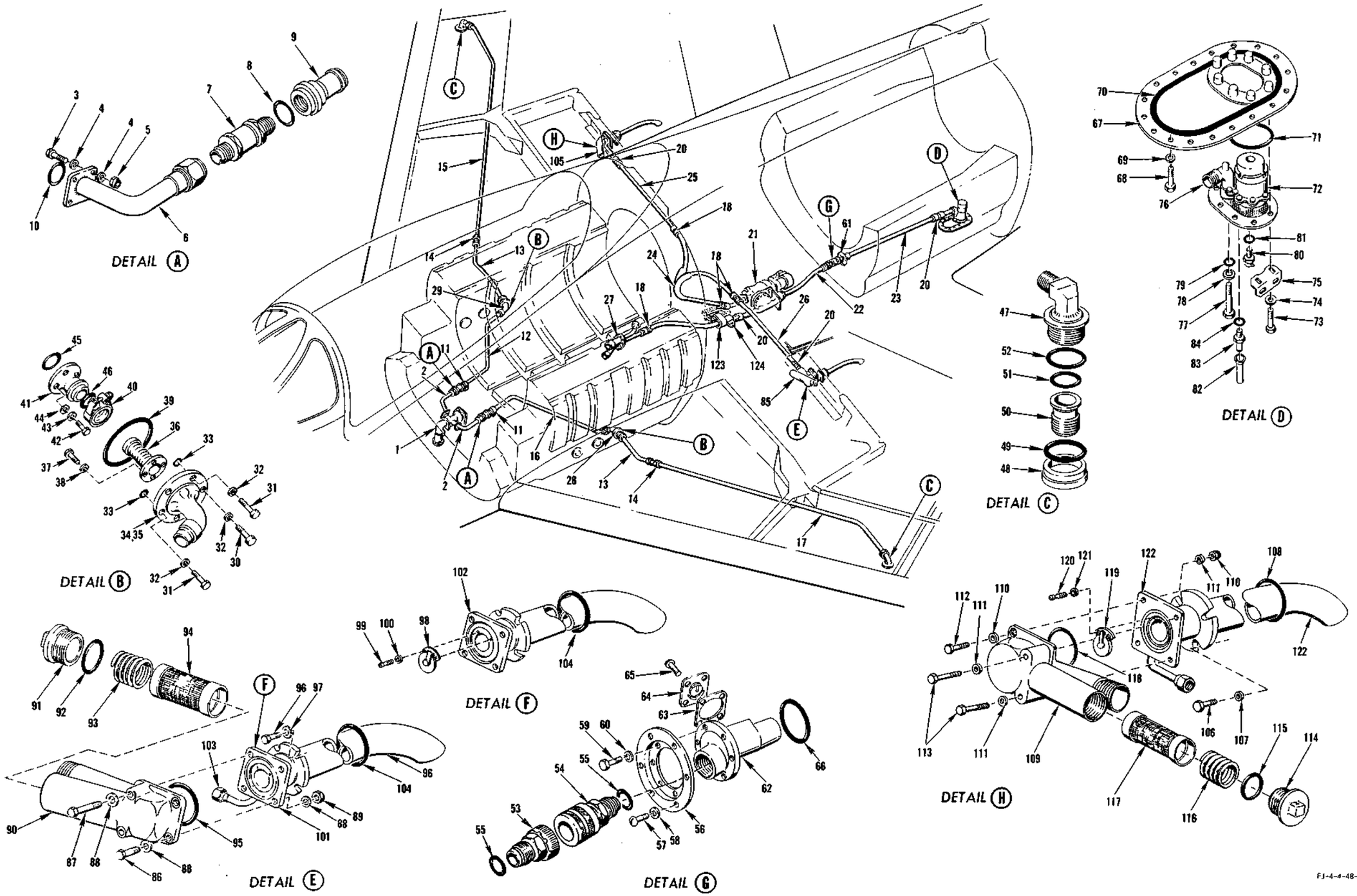

FIGURE 98 - TRANSFER SYSTEM - APPLICABLE TO AIRCRAFT CODED (A)

TRANSFER SYSTEM - APPLICABLE TO AIRCRAFT CODED (A)

FIGURE & INDEX NO.	PART NUMBER	1 2 3 4 5 6 7 NOMENCLATURE	UNITS PER ASSY.	USABLE ON CODE	S/C NO.
98-1	209-48206-21	RECEPTACLE ASSEMBLY, Single-point refuel and defuel unit (see figure 110 for breakdown) (supersedes 209-48206 for future procurement)	1	A	
-2	209-48360	LINE ASSEMBLY, Drop tank forward fuselage fuel cell	2	A	
	ATTACHING PARTS				
-3	AN3-5A	BOLT	8	A	
-4	2W18-10M	WASHER, Flat (NA) (89372)	16	A	
-5	AN363C1032	NUT	8	A	
	---*---				
-6	209-48361	. LINE ASSEMBLY, Drop tank forward fuselage fuel cell welded	1	A	
-7	MS28885-16	. VALVE (interchangeable with 37552 (KOE) (75361)	1	A	
-8	MS29512-16	. GASKET	1	A	
-9	209-48359	. NIPPLE, Forward fuselage fuel cell drop tank line assembly	1	A	
-10	MS29513-124	PACKING	2	A	
-11	C11-21100	COUPLING, Flexible joint (MAR) (98625) (supersedes C11-11100 (MAR) (98625) for future procurement)	2	A	
-12	209-48801-33	LINE ASSEMBLY, Single-point unit to drop tank RH	1	A	
-13	209-48167	LINE ASSEMBLY, Drop tank transfer	2	A	
-14	4177-16H	. COUPLING (Rubber-Teck Sales and Service Co.) (98159)	2	A	
	4178-16	RING (Rubber-Teck Sales and Service Co.) (98159)	2	A	
-15	209-48802-7	LINE ASSEMBLY, Drop tank transfer first section RH	1	A	
-16	209-48801-31	LINE ASSEMBLY, Single-point unit to drop tank LH	1	A	
-17	209-48802-5	LINE ASSEMBLY, Drop tank transfer first section LH	1	A	
-18	3605-20D	COUPLING (WIG) (79326)	4	A	
	3605-20D-3	. NUT, Coupling (WIG) (79326)	1	A	
	3601-20D-9	. WASHER, Coupling (WIG) (79326)	2	A	
	3605-20D-24	. RETAINER HALF, Coupling (WIG) (79326)	2	A	
	3601-20D-1	. BODY (WIG) (79326)	1	A	
	MS29513-218	PACKING	8	A	
-19	209-48801-163	TUBE, Forward fuselage fuel cell to wing transfer pump	1	A	
-20	3655-20D	COUPLING (WIG) (79326)	4	A	
	3605-20D-3	. NUT, Coupling (WIG) (79326)	1	A	
	3601-20D-9	. WASHER, Coupling (WIG) (79326)	2	A	
	MS29513-218	PACKING	4	A	
-21	209-48129-11	PUMP ASSEMBLY, Wing fuel transfer (supersedes 209-48129 for future procurement) (see figure 108 for breakdown)	1	A	
-22	MS28741-20-0155	HOSE ASSEMBLY	1	A	
-23	209-48804	LINE, Fuel aft fuselage cell transfer pump to outlet	1	A	
-24	209-48170	FITTING ASSEMBLY, Wing fuel transfer at fuselage centerline	1	A	
	ATTACHING PARTS				
	AN945-4P	WASHER	2	A	
	AN365-428	NUT	2	A	
	---*---				
	209-48375	. FITTING, Wing fuel transfer Y	1	A	
-25	209-48801-359	LINE, Wing fuel transfer to fuselage centerline RH (supersedes 209-48801-105 for future procurement)	1	A	
-26	209-48801-103	LINE ASSEMBLY, Wing fuel transfer to fuselage centerline LH	1	A	
	MS29513-218	PACKING	1	A	
-27	209-48215	FITTING ASSEMBLY, Canted station 180.906 fuel	1	A	
	ATTACHING PARTS				
	AN4-10A	BOLT	7	A	
	2W18-416	WASHER, Flat (NA) (89372)	7	A	
	MS29513-243	PACKING	1	A	
	---*---				
	6-2001	. VALVE (SAHR) (98736) (interchangeable with 37181-1 (KOE) (75361))	1	A	
	AN500A6-5	. SCREW	2	A	
	2W1AL12-8-32	. WASHER, Plain (NA) (89372)	2	A	
	1185-08CNx-.207	. INSERT, Heli-coil (AF) (91767)	2	A	
-28	209-48335-1	ELBOW ASSEMBLY, Drop tank fuel transfer LH	1	A	
-29	209-48335-2	ELBOW ASSEMBLY, Drop tank fuel transfer RH	1	A	
	ATTACHING PARTS				
-30	AN4-5A	BOLT	4	A	
-31	AN4-11A	BOLT	2	A	
-32	2W18-416M	WASHER, Flat (NA) (89372)	6	A	
-33	MS29513-10	PACKING	2	A	
	---*---				
-34	209-48334-1	. ELBOW, Drop tank fuel transfer LH	1	A	
-35	209-48334-2	. ELBOW, Drop tank fuel transfer RH	1	A	
	1191-3CNx-.380	. . INSERT, Heli-coil (AF) (91767)	4	A	
-36	91051	. BELLOWS ASSEMBLY (ARW) (91499)	1	A	
-37	AN3H4A	. BOLT	4	A	
-38	2W18-10M	. WASHER, Flat (NA) (89372)	4	A	
-39	MS29513-234	PACKING	1	A	
-40	4369-219S	COUPLING (MAR) (98625)	1	A	
-41	209-48161	FITTING, Drop tank transfer wing station 32.219	1	A	
	ATTACHING PARTS				
-42	AN4-11A	BOLT	4	A	
-43	2W18-416M	WASHER, Flat (NA) (89372)	4	A	
-44	600-015-1/4	STAT-O-SEAL (WFRC) (83259)	4	A	
-45	MS29513-237	PACKING	1	A	
	---*---				
-46	MS29513-214	PACKING	1	A	
-47	209-48192-1	FITTING ASSEMBLY, Drop tank transfer wing LH	1	A	
	209-48192-2	FITTING ASSEMBLY, Drop tank transfer wing RH	1	A	

TRANSFER SYSTEM - APPLICABLE TO AIRCRAFT CODED (A)

FIGURE & INDEX NO.	PART NUMBER	1 2 3 4 5 6 7	NOMENCLATURE	UNITS PER ASSY.	USABLE ON CODE	S/C NO.
98	1191-20CNx-.625	.	INSERT, Heli-coil (AF) (91767)	1	A	
-48	209-48193		NUT, Drop tank transfer fitting retaining	1	A	
-49	MS29513-225		PACKING	1	A	
-50	209-48194-11		PLUG, Drop tank transfer fitting (supersedes 209-48194 for future procurement)	1	A	
-51	MS29512-12		GASKET (use with 209-48194)	1	A	
	MS29513-119		PACKING (use with 209-48194-11)	1	A	
-52	MS29512-20		GASKET	1	A	
-53	20163-2		COUPLING (EAAC) (19069) (20163-2 together with 20162-21 (EAAC) (19069) supersedes 20060-4 together with 20060-21 (EAAC) (19069) for future procurement)	1	A	439
-54	20162-21		COUPLING (EAAC) (19069) (20162-21 together with 20163-2 (EAAC) (19069) supersedes 20062-21 together with 20060-4 (EAAC) (19069) for future procurement)	1	A	439
-55	MS29512-20		GASKET	2	A	
-56	209-48414		CUP, Fuel aft fuselage cell transfer outlet	1	A	
	ATTACHING PARTS					
-57	AN520-10R8		SCREW	6	A	
-58	2W18-10M		WASHER, Flat (NA) (89372)	6	A	
-59	AN4-5A		BOLT	6	A	
-60	2W18-416		WASHER, Flat (NA) (89372)	6	A	
	---*---					
-61	209-48412		FITTING ASSEMBLY, Fuel aft fuselage cell transfer outlet	1	A	
-62	209-48413	.	FITTING, Fuel aft fuselage cell transfer outlet	1	A	
-63	181-48068	.	GASKET, Aft fuel cell transfer fitting	1	A	
-64	1111-518038	.	VALVE ASSEMBLY (PAET) (92003)	1	A	
-65	AB502-10-8	.	SCREW	4	A	
-66	MS29513-237		PACKING	1	A	
-67	209-48420		DOOR ASSEMBLY, Fuel aft fuselage cell access	1	A	464
	ATTACHING PARTS					
-68	AN4-5A		BOLT	20	A	
-69	2W18-416M		WASHER, Flat (NA) (89372)	20	A	
	---*---					
	1191-4Cx1/2		INSERT, Heli-coil (AF) (91767)	8	A	
-70	5190-527710		"O" RING (PA) (45681)	1	A	
-71	MS29513-252		PACKING	1	A	
-72	TB116900	*1	PUMP ASSEMBLY, Fuel boost (TP) (59875) (interchangeable with RG-11510-C (RO) (51663))	1	A	
	RG-11510-C	*1	PUMP ASSEMBLY, Fuel boost (RO) (51663) (interchangeable with TP116900 (TP) (59875))	1	A	
	ATTACHING PARTS					
-73	AN4H6A		BOLT	8	A	
-74	2W18-416M		WASHER, Flat (NA) (89372)	8	A	
-75	209-48222		CLIP, Fuel aft fuselage cell access door support aft	2	A	
	---*---					
-76	209-48426		ELBOW, Fuel aft fuselage cell transfer pump outlet	1	A	
	ATTACHING PARTS					
-77	AN76A47		BOLT	1	A	
-78	2W17-616M		WASHER, Corrosion-resistant steel (NA) (89372)	1	A	
-79	MS29513-12		PACKING	1	A	
	---*---					
-80	CCA4300		DRAIN VALVE (CTAD) (82254)	1	A	
-81	MS29512-4		GASKET	1	A	
-82	10C2B13-1		CONDUIT (NA) (89372)	1	A	
-83	187-48370		NIPPLE, Fuel boost pump seal drain	1	A	
-84	MS29512-4		GASKET	1	A	
-85	209-48118		HOUSING ASSEMBLY, Wing fuel transfer strainer	1	A	
	ATTACHING PARTS					
-86	AN4-10A		BOLT	2	A	
-87	AN4-17A		BOLT	2	A	
-88	2W18-416M		WASHER, Flat (NA) (89372)	10	A	
-89	AN364-428		NUT	4	A	
	---*---					
-90	209-48171-1	.	HOUSING, Strainer valve transfer outlet LH	1	A	
-91	209-48175	.	PLUG, Wing fuel transfer screen	1	A	
-92	MS29512-20	.	GASKET	1	A	
-93	209-48177	.	SPRING, Compression	1	A	
-94	209-48176	.	STRAINER ASSEMBLY, Wing fuel transfer	1	A	
-95	MS29513-144		PACKING	1	A	
	209-48172-11		OUTLET ASSEMBLY, Fuel transfer inboard wing BL 36.25 LH (superseded by 209-48172-1 for future procurement)	1	A	
	209-48172-1		OUTLET ASSEMBLY, Fuel transfer inboard wing BL 36.25 LH (supersedes 209-48172-1 and superseded by 209-48172-21 for future procurement)	1	A	
	209-48172-21		OUTLET ASSEMBLY, Fuel transfer inboard wing BL 36.25 LH (supersedes 209-48172-1 for future procurement)	1	A	
	ATTACHING PARTS					
-96	AN4-13A		BOLT	2	A	
-97	2W18-416		WASHER, Flat (NA) (89372)	2	A	
	---*---					
-98	1111-58180	*3 .	VALVE, Wing fuel transfer check (PAET) (92003)	1	A	
	1111-548382	*5 .	VALVE, Wing fuel transfer check (PAET) (92003) interchangeable with 6-2004 (SAHR) (96736)	1	A	
-99	AN500A6-5	*4 .	SCREW	2	A	
-100	2W18-6L	*4 .	WASHER, Flat (NA) (89372)	2	A	

TRANSFER SYSTEM - APPLICABLE TO AIRCRAFT CODED (A)

FIGURE & INDEX NO.	PART NUMBER		1 2 3 4 5 6 7 NOMENCLATURE	UNITS PER ASSY.	USABLE ON CODE	S/C NO.
98-101	209-48169-1	*2	. ADAPTER, Fuel pump transfer outlet inboard wing	1	A	
-102	209-48198	*4	. ADAPTER, Fuel pump transfer and vent inboard wing	1	A	
-103	AN819-6Z	*2	. SLEEVE	1	A	
	AN818-6D	*2	. SLEEVE	1	A	
-104	MS29513-137		PACKING	1	A	
-105	209-48173-12		VALVE ASSEMBLY, Wing fuel transfer check RH (supersedes 209-48173-2 for future procurement)	1	A	
	ATTACHING PARTS					
-106	AN4-13A		BOLT	4	A	
-107	2W18-416		WASHER, Flat (NA) (89372)	4	A	
-108	MS29513-137		PACKING	1	A	
	---*---					
-109	209-48171-2		. HOUSING, Strainer valve transfer outlet RH	1	A	
-110	AN364-428		. NUT	4	A	
-111	2W18-416M		. WASHER, Flat (NA) (89372)	10	A	
-112	AN4-10A		. BOLT	2	A	
-113	AN4-17A		. BOLT	2	A	
-114	209-48175		. PLUG, Wing fuel transfer screen	1	A	
-115	MS29512-20		. GASKET	1	A	
-116	209-48177		. SPRING, Compression	1	A	
-117	209-48176		. STRAINER ASSEMBLY, Wing fuel transfer	1	A	
-118	MS29513-144		. PACKING	1	A	
-119	1111-548382		VALVE (PAET) (92003) (wing fuel transfer check) (interchangeable with 6-2004 (SAHR) (96736))	1	A	
-120	AN500A6-5		. SCREW	2	A	
-121	2W18-6L		. WASHER, Flat (NA) (89372)	2	A	
-122	209-48172-2		. OUTLET ASSEMBLY, Fuel transfer inboard wing BL 36.25 RH	1	A	
-123	209-48366		GUIDE, Fuel transfer to forward cell	1	A	
	ATTACHING PARTS					
	AN3-6A		BOLT	2	A	
	2W1AL-14-24-32		WASHER, Plain (NA) (89372)	4	A	
	AN365-1032		NUT	2	A	
	---*---					
-124	209-48365		FAIRLEAD, Fuel transfer to forward cell	1	A	
	ATTACHING PARTS					
	AN3-4A		BOLT	1	A	
	2W18-10M		WASHER, Flat (NA) (89372)	2	A	
	AN365-1032		NUT	1	A	
	---*---					

NOTE: *1 Supersedes 122637-221-02 (PE) (77200) and/or 122637-220-04 (PE) (77200) together with 12-557 (PE) (77200) and MS29513-28 for future procurement
*2 Used on 209-48172-11 only
*3 Used on 209-48172-1 only
*4 Used on 209-48172-1 and 209-48172-21
*5 Used on 209-48172-21

TRANSFER SYSTEM - APPLICABLE TO AIRCRAFT CODED (HD)

FIGURE & INDEX NO.	PART NUMBER	1 2 3 4 5 6 7	NOMENCLATURE	UNITS PER ASSY.	USABLE ON CODE	S/C NO.
99-1	209-48206-31		RECEPTACLE ASSEMBLY, Single point refuel and defuel unit (supersedes 209-48206-11 for future procurement) (see figure 110 for breakdown)	1	HD	
	ATTACHING PARTS					
-2	MS29513-250		PACKING	1	HD	
-3	AN4-5A		BOLT	8	HD	
-4	2W18-416M		WASHER, Flat (NA) (89372)	8	HD	
	---*---					
-5	209-48255		LINE ASSEMBLY, Weld RH drop tank forward fuselage fuel cell	1	HD	
	ATTACHING PARTS					
-6	AN363C428		NUT	4	HD	
-7	2W18-416		WASHER, Flat (NA) (89372)	8	HD	
-8	AN4-6A		BOLT	4	HD	
-9	MS29513-125		PACKING	1	HD	
	---*---					
-10	32P-101-1		VALVE ASSEMBLY, Two-way variable (AAPR) (82829)	1	HD	
	ATTACHING PARTS					
-11	AN363C428		NUT	4	HD	
-12	2W18-416M		WASHER, Flat (NA) (89372)	8	HD	
-13	AN4-6A		BOLT	4	HD	
-14	MS29513-137		PACKING	1	HD	
	---*---					
-15	N50-200S	*1	COUPLING (NUCA) (94581)	1	HD	
	RS-5-200	*1	SLEEVE (NUCA) (94581)	1	HD	
-16	209-48801-241		TUBE ASSEMBLY, Variable check valve to drop tank cell fitting LH	1	HD	
-17	20P-103-11		VALVE ASSEMBLY, Two-way variable (AAPR) (82829) (supersedes 209-948159 and/or 20P-103-1 (AAPR) (82829) for future procurement)	1	HD	
-18	209-48801-83		LINE ASSEMBLY, RH variable check valve to RH cell fitting	1	HD	
-19	209-48260		ELBOW ASSEMBLY, RH drop tank fuel transfer	1	HD	
-20	209-48113		LINE ASSEMBLY, Drop tank transfer RH inboard wing	1	HD	
-21	209-48126		LINE ASSEMBLY, Inflight refueling wing probe inboard (LH only)	1	HD	
-22	209-48125-11		LINE, Inflight refueling wing probe outboard (LH only)	1	HD	
-23	209-48102-101		FITTING ASSEMBLY, Inflight refueling LH wing probe (supersedes 209-48102 for future procurement) (see figure 102 for breakdown)	1	HD	
-24	209-48802-11		LINE ASSEMBLY, Drop tank transfer LH	1	HD	
-25	209-48801-163		TUBE, Forward fuselage fuel cell to wing transfer pump	1	HD	
-26	209-48129		PUMP ASSEMBLY, Wing fuel transfer (see figure 107 for breakdown)	1	HD	
-27	MS28741-20-0155		HOSE ASSEMBLY	1	HD	
-28	209-48804		LINE ASSEMBLY, Fuel aft fuselage cell transfer pump to outlet	1	HD	
-29	3655-20D		COUPLING, Flexible half (WIG) (79326)	5	HD	
	3605-20D-3		. NUT, Coupling (WIG) (79326)	1	HD	
	3601-20D-9		. WASHER, Coupling (WIG) (79326)	2	HD	
	MS29513-218		PACKING	5	HD	
-30	3605-20D		COUPLING, Flexible (WIG) (79326)	4	HD	
	3605-20D-3		. NUT, Coupling (WIG) (79326)	1	HD	
	3601-20D-9		. WASHER, Coupling (WIG) (79326)	2	HD	
	3605-20D-24		. RETAINER HALF, Coupling (WIG) (79326)	2	HD	
	3601-20D-1		. BODY, Coupling (WIG) (79326)	1	HD	
	MS29513-218		PACKING	8	HD	
-31	209-48170		FITTING ASSEMBLY, Wing fuel transfer at fuselage centerline	1	HD	
	209-48375		. FITTING, Wing fuel transfer "Y"	1	HD	
-32	209-48801-359		LINE, Wing fuel transfer to fuselage centerline RH (supersedes 209-48801-105 for future procurement)	1	HD	
-33	209-48801-103		TUBE, Wing fuel transfer to fuselage centerline RH	1	HD	
-34	6-3204		VALVE, Check (SAHR) (96736)	12	HD	
	ATTACHING PARTS					
	AN515-6R10		SCREW	24	HD	
	2W18-6		WASHER, Flat (NA) (89372)	48	HD	
	AN365-632		NUT	24	HD	
	---*---					
-35	6-3204		VALVE, Check (SAHR) (96736)	6	HD	
	ATTACHING PARTS					
	AN500A6-6		SCREW	12	HD	
	2W18-6		WASHER, Flat (NA) (89372)	12	HD	
	---*---					
	209-48260		ELBOW ASSEMBLY, RH drop tank transfer	1	HD	
	ATTACHING PARTS					
-36	AN4-5A		BOLT	4	HD	
-37	AN4-11A		BOLT	2	HD	
-38	2W18-416M		WASHER, Flat (NA) (89372)	6	HD	
-39	MS29513-10		PACKING	2	HD	
	---*---					
-40	209-48257		. ELBOW, RH drop tank transfer	1	HD	
-41	FT-986		. BELLOWS (FLTU) (83144) (interchangeable with 91059 (ARW) (91499))	1	HD	
-42	AN3H4A		. BOLT	4	HD	
-43	2W18-10M		. WASHER, Flat (NA) (89372)	4	HD	
-44	MS29513-234		PACKING	1	HD	
-45	4369-219S		COUPLING (MAR) (98625)	1	HD	
-46	209-48112		FITTING, RH drop tank transfer wing	1	HD	
	ATTACHING PARTS					
-47	AN4-11A		BOLT	4	HD	
-48	2W18-416M		WASHER, Flat (NA) (89372)	4	HD	
-49	600-015-1/4		STAT-O-SEAL (WFRC) (83259)	4	HD	

TRANSFER SYSTEM - APPLICABLE TO AIRCRAFT CODED (HD)

FIGURE & INDEX NO.	PART NUMBER	1 2 3 4 5 6 7 NOMENCLATURE	UNITS PER ASSY.	USABLE ON CODE	S/C NO.
99-50	MS29513-237	PACKING	1	HD	
		---*---			
-51	MS29513-124	PACKING	1	HD	
	209-48192-1	FITTING ASSEMBLY, Drop tank transfer wing LH	1	HD	
-52	209-48192-2	FITTING ASSEMBLY, Drop tank transfer wing RH	1	HD	
	1191-20CNx-.625	. INSERT, Heli-coil (AF) (91767)	2	HD	
-53	209-48193	NUT, Drop tank transfer fitting retaining	2	HD	
-54	MS29513-225	PACKING	2	HD	
-55	209-48194-11	PLUG, Drop tank transfer fitting (209-48194-11 together with MS29513-119 supersedes 209-48194 together with MS29512-12 for future procurement)	2	HD	
-56	MS29513-119	PACKING	2	HD	
-57	MS29512-20	GASKET	2	HD	
	209-48283	BELLOWS ASSEMBLY, Inflight refueling forward fuselage cell	1	HD	
	ATTACHING PARTS				
-58	AN4-11A	BOLT	2	HD	
-59	AN4-5A	BOLT	4	HD	
-60	2W18-416M	WASHER, Flat (NA) (89372)	6	HD	
-61	600-015-1/4	STAT-O-SEAL (WFRC) (83259)	2	HD	
		---*---			
-62	209-48222	. FITTING ASSEMBLY, Inflight refueling line forward fuselage cell	1	HD	
-63	FT-983	. BELLOWS ASSY (FLTU) (83144) (interchangeable with 91060 (ARW) (91499))	1	HD	
-64	AN3H4A	. BOLT	6	HD	
-65	2W18-10M	. WASHER, Flat (NA) (89372)	6	HD	
-66	MS29513-240	PACKING	1	HD	
-67	4369-300S	COUPLING (MAR) (98625)	1	HD	
-68	209-48151	FITTING, Inflight refueling inboard wing (LH only)	1	HD	
	ATTACHING PARTS				
-69	AN4-11A	BOLT	8	HD	
-70	2W18-416M	WASHER, Flat (NA) (89372)	8	HD	
-71	600-015-1/4	STAT-O-SEAL (WFRC) (83259)	8	HD	
		---*---			
-72	MS29513-244	PACKING	1	HD	
-73	MS29513-226	PACKING	1	HD	
-74	209-48154	NUT, Two-inch fuel line coupling male	1	HD	
-75	209-48123	SLEEVE, Fuel line connector two-inch OD	2	HD	
-76	4178-32	RING (Rubber-Teck Sales and Service Co) (98159)	1	HD	
-77	209-48155	NUT, Two-inch fuel line coupling female	1	HD	
-78	20163-2	COUPLING (EAAC) (19069) (20163-2 together with 20162-21 (EAAC) (19069) supersedes 20060-4 (EAAC) (19069) or 20060-41 (EAAC) (19069) together with 20060-21 (EAAC) (19069) for future procurement)	1	HD	439
-79	20162-21	COUPLING (EAAC) (19069) with 20163-2 (EAAC) (19069) supersedes 20060-21 (EAAC) (19069) together with 20060-4 (EAAC) (19069) or 20060-41 (EAAC) (19069) for future procurement)	1	HD	439
-80	MS29512-20	GASKET	2	HD	
-81	209-48414	CUP, Fuel aft fuselage cell transfer outlet	1	HD	
	ATTACHING PARTS				
-82	AN520-10R8	SCREW	6	HD	
-83	2W18-10M	WASHER, Flat (NA) (89372)	6	HD	
		---*---			
	209-48412	FITTING ASSEMBLY, Fuel aft fuselage cell transfer outlet	1	HD	
	ATTACHING PARTS				
-84	AN4H5A	BOLT	1	HD	
-85	AN4-5A	BOLT	5	HD	
-86	2W18-416	WASHER, Flat (NA) (89372)	6	HD	
		---*---			
-87	209-48413	. FITTING, Fuel aft fuselage cell transfer outlet	1	HD	
-88	181-48068	. GASKET, Aft fuel cell transfer fitting	1	HD	
-89	1111-518038	. VALVE ASSEMBLY (PAET) (92003)	1	HD	
-90	AN502-10-8	. SCREW	4	HD	
-91	MS29513-237	PACKING	1	HD	
-92	209-48420	DOOR ASSEMBLY, Fuel cell aft fuselage access	1	QC	464
-93	209-48432	DOOR, Fuel cell aft fuselage access assembly of	1	FH	
	ATTACHING PARTS				
-94	AN4-5A	BOLT	20	HD	
-95	2W18-416M	WASHER, Flat (NA) (89372)	20	HD	
		---*---			
	1191-4CNx-1/2	. INSERT, Heli-coil (AF) (91767)	8	QC	464
	3591-4CNx-1/2	. INSERT, Heli-coil (AF) (91767)	8	FH	
-96	CCA4300	DRAIN VALVE ASSEMBLY (CTAD) (82254)	1	FH	
-97	MS29512-4	GASKET	1	FH	
-98	F-8300-24	FLOAT SWITCH ASSEMBLY (RCO) (50625) (see Electrical and Instrument)	1	FH	
-99	MS29512-5	GASKET	1	FH	
-100	2W18-816M	WASHER, Flat (NA) (89372)	1	FH	
-101	AN364-820	NUT	1	FH	
-102	180-948040-5	SEAL, Fuel forward fuselage tank boost pump access door (NA Dwg Design Spec)	1	HD	
-103	MS29513-252	PACKING	1	HD	
-104	TB116900 *2	PUMP ASSY, Fuel boost (TP) (59875) (intchg with RG-11510-C (RO) (51663))	1	HD	
-105	RG11510-C *2	PUMP ASSY, Fuel boost (RO) (51663) (intchg with TB116900 (TP) (59875))	1	HD	
	ATTACHING PARTS				
-106	AN4H6A	BOLT	8	HD	
-107	2W18-416M	WASHER, Flat (NA) (89372)	8	HD	
-108	209-48422	CLIP, Fuel aft fuselage cell access door support	2	HD	
		---*---			
-109	209-48426	ELBOW, Fuel aft fuselage cell transfer pump outlet	1	HD	

TRANSFER SYSTEM - APPLICABLE TO AIRCRAFT CODED (HD)

FIGURE & INDEX NO.	PART NUMBER	1 2 3 4 5 6 7 NOMENCLATURE	UNITS PER ASSY.	USABLE ON CODE	S/C NO.
99		ATTACHING PARTS			
-110	AN76A47	BOLT	1	HD	
-111	2W17-616M	WASHER, Corrosion-resistant steel (NA) (89372)	1	HD	
-112	MS29513-12	PACKING	1	HD	
		---*---			
-113	CCA4300	VALVE ASSEMBLY, Fuel pump drain (CTAD) (82254)	1	HD	
-114	MS29512-4	GASKET	1	HD	
-115	10C2B13-1	CONDUIT (NA) (89372)	1	HD	
-116	187-48370	NIPPLE, Fuel booster pump seal drain	1	HD	
-117	MS29512-4	GASKET	1	HD	
-118	209-48215	FITTING ASSEMBLY, Canted station 180.906 fuel	1	HD	
		ATTACHING PARTS			
	AN4-10A	BOLT	7	HD	
	2W18-416	WASHER, Flat (NA) (89372)	7	HD	
	MS29513-243	PACKING	1	HD	
		---*---			
	209-48118	HOUSING ASSEMBLY, Wing fuel transfer strainer	1	HD	
		ATTACHING PARTS			
-119	AN4-10A	BOLT	2	HD	
-120	AN4-17A	BOLT	2	HD	
-121	2W18-416M	WASHER, Flat (NA) (89372)	10	HD	
-122	AN364-428	NUT	4	HD	
		---*---			
-123	209-48171-1	. HOUSING, Strainer valve transfer outlet LH	1	HD	
-124	209-48175	. PLUG, Wing fuel transfer screen	1	HD	
-125	MS29512-20	. GASKET	1	HD	
-126	209-48177	. SPRING, Compression	1	HD	
-127	209-48176	. STRAINER ASSEMBLY, Wing fuel transfer	1	HD	
-128	MS29513-144	PACKING	1	HD	
	209-48172-21	OUTLET ASSEMBLY, Fuel transfer inboard wing BL 36.25 LH (supersedes 209-48172-1 for future procurement)	1	HD	
		ATTACHING PARTS			
-129	AN4-13A	BOLT	2	HD	
-130	2W18-416	WASHER, Flat (NA) (89372)	2	HD	
		---*---			
-131	209-48198	. ADAPTER, Fuel transfer inboard wing BL 36.25 LH outlet assembly	1	HD	
-132	1111-548382	. VALVE (PAET) (92003) (interchangeable with 6-2004 (SAHR) (96736)) (used on 209-48172-21 only)	1	HD	
	1111-548180	. VALVE (PAET) (92003) (used on 209-48172-1 only)	1	HD	
-133	AN500A6-5	. SCREW	2	HD	
-134	2W18-6L	. WASHER, Flat (NA) (89372)	2	HD	
-135	MS29513-137	PACKING	1	HD	
	209-48173-12	VALVE ASSEMBLY, Wing fuel transfer check RH (supersedes 209-48173-2 for future procurement)	1	HD	
		ATTACHING PARTS			
-136	AN4-13A	BOLT	4	HD	
-137	2W18-416	WASHER, Flat (NA) (89372)	4	HD	
-138	MS29513-137	PACKING	1	HD	
		---*---			
-139	209-48171-2	. HOUSING, Strainer valve transfer outlet RH	1	HD	
-140	AN4-10A	. BOLT	2	HD	
-141	AN4-17A	. BOLT	2	HD	
-142	2W18-416M	. WASHER, Flat (NA) (89372)	10	HD	
-143	AN364-428	. NUT	4	HD	
-144	209-48175	. PLUG, Wing fuel transfer screen	1	HD	
-145	MS29512-20	. GASKET	1	HD	
-146	209-48177	. SPRING, Compression	1	HD	
-147	209-48176	. STRAINER ASSEMBLY, Wing fuel transfer	1	HD	
-148	MS29513-144	. PACKING	1	HD	
-149	1111-548382	. VALVE (PAET) (92003) (interchangeable with 6-2004 (SAHR) (96736) (used on 209-48173-12 only)	1	HD	
	1111-548180	. VALVE (PAET) (92003) (used on 209-48173-2 only)	1	HD	
-150	AN500A6-5	. SCREW	2	HD	
-151	2W18-6L	. WASHER, Flat (NA) (89372)	2	HD	
	209-48172-2	. OUTLET ASSEMBLY, Fuel transfer inboard wing BL 36.25 RH	1	HD	
-152	209-48169-2	. . ADAPTER, Fuel transfer inboard wing BL 36.25 RH outlet assembly	1	HD	
-153	209-48366	GUIDE, Fuel transfer to forward cell	1	HD	
		ATTACHING PARTS			
	AN3-6A	BOLT	2	HD	
	2W1AL-14-24-32	WASHER, Plain (NA) (89372)	4	HD	
	AN365-1032	NUT	2	HD	
		---*---			
-154	209-48385	FAIRLEAD, Fuel transfer to forward cell	1	HD	
		ATTACHING PARTS			
	AN3-4A	BOLT	1	HD	
	2W18-10M	WASHER, Flat (NA) (89372)	2	HD	
	AN365-1032	NUT	1	HD	
		---*---			

NOTE: *1 N50-200S together with RS-5-200 supersede CF14-200 (MAR) (98625) which supersedes C11-11200 (MAR) (98625) and/or C11-21200 (MAR) (98625) for future procurement
*2 Supersedes 122637-221-02 (PE) (77200) or 122637-220-04 (PE) (77200) together with 12-557 (PE) (77200) and MS29513-28 for future procurement

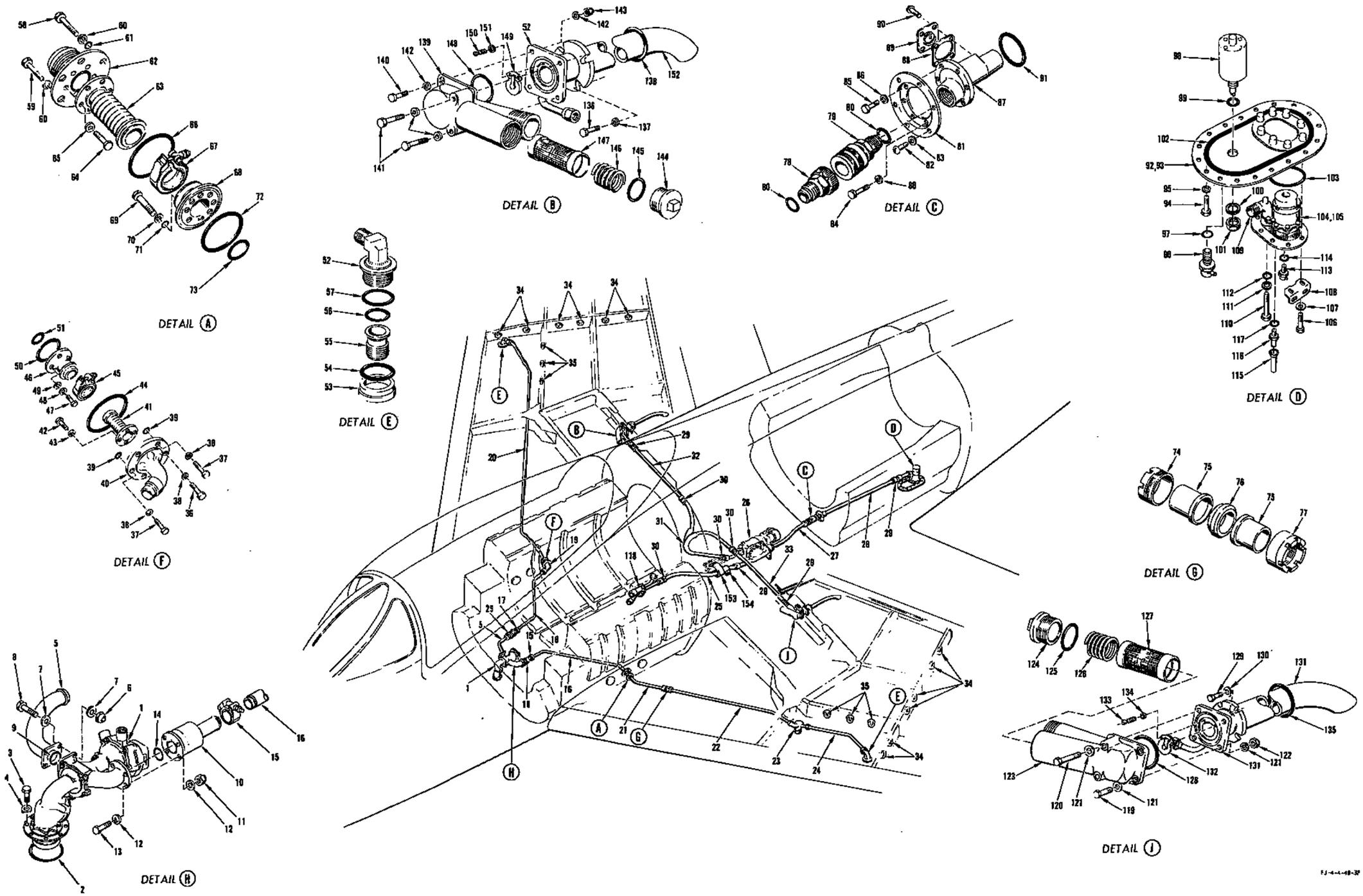

FIGURE 99 - TRANSFER SYSTEM - APPLICABLE TO AIRCRAFT CODED (HD)

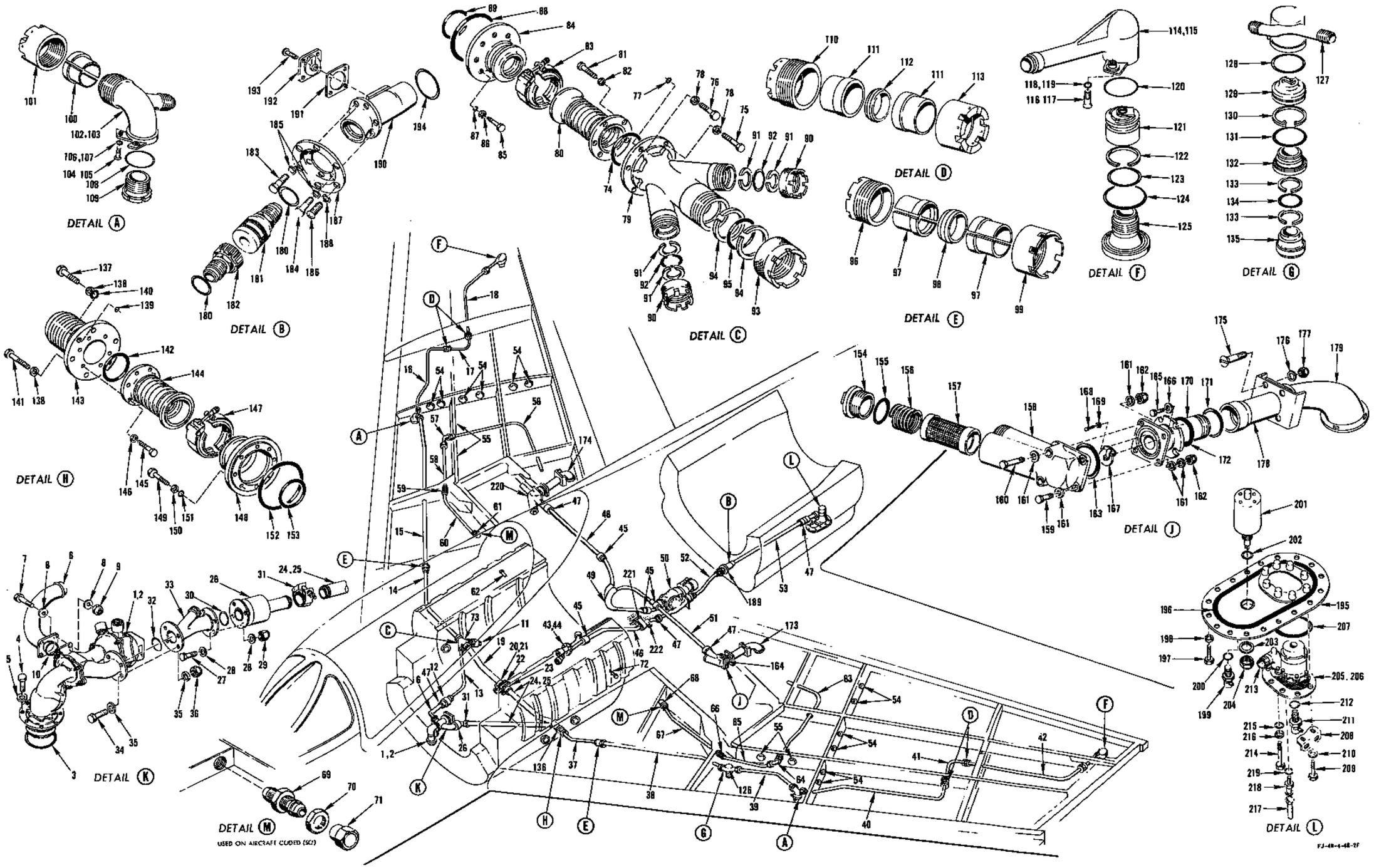

FIGURE 100 - TRANSFER SYSTEM - APPLICABLE TO AIRCRAFT CODED (FR)

TRANSFER SYSTEM - APPLICABLE TO AIRCRAFT CODED (FR)

FIGURE & INDEX NO.	PART NUMBER	1 2 3 4 5 6 7 NOMENCLATURE	UNITS PER ASSY.	USABLE ON CODE	S/C NO.
100-1	209-48206-31	RECEPTACLE ASSEMBLY, Single-point refuel and defuel unit (supersedes 209-48206-11 for future procurement) (see figure 110 for breakdown)	1	KY	
-2	209-48206-11	RECEPTACLE ASSEMBLY, Single-point refuel and defuel unit (superseded by 209-48206-31 for future procurement) (for breakdown see Technical Manual NAVAER 03-10ABN505)	1	KX	
		ATTACHING PARTS			
-3	MS29513-250	PACKING	1	FR	
-4	AN4-5A	BOLT	8	FR	
-5	2W18-416M	WASHER, Flat (NA) (89372)	8	FR	
		---*---			
-6	209-48255	LINE ASSEMBLY, Weld RH drop tank forward fuselage fuel cell	1	FR	
		ATTACHING PARTS			
-7	AN4-6A	BOLT	4	FR	
-8	2W18-416	WASHER, Flat (NA) (89372)	8	FR	
-9	AN363C428	NUT	4	FR	
		---*---			
-10	MS29513-125	PACKING	1	FR	
-11	1111-565455	VALVE (PAET) (92003) (see figure 105 for continuation)	1	FR	
-12	20P-103-11	VALVE (AAPR) (82829)	1	FR	
-13	209-48821-53	LINE ASSEMBLY, Fuel forward fuselage	1	FR	
-14	209-48126	LINE ASSEMBLY, Inflight refuel RH wing probe inboard	1	FR	
-15	209-48802-60	LINE ASSEMBLY, Drop tank transfer RH	1	FR	
-16	209-48802-31	LINE ASSEMBLY, Outboard drop tank transfer inboard RH	1	FR	
-17	209-48802-56	LINE ASSEMBLY, Drop tank transfer	1	FR	
-18	209-48802-37	LINE ASSEMBLY, Outboard drop tank transfer outboard RH	1	FR	
-19	209-482110	LINE ASSEMBLY, Drop tank fitting to cross manifold station 151.969	1	FR	
-20	209-48054	CROSS, Single-point refueling to wing aft fuselage and buddy tanker	1	MD	
	3591-4CNx-1/2	. INSERT, Heli-coil (AF) (91767)	4	MD	
	3591-3CNx-.380	. INSERT, Heli-coil (AF) (91767)	3	MD	
-21	209-483243	FITTING, Single-point refueling to wing and buddy tank	1	ME	
	3591-4CNx-1/2	. INSERT, Heli-coil (AF) (91767)	4	ME	
	3591-3CNx-.380	. INSERT, Heli-coil (AF) (91767)	3	ME	
-22	08-17180F	VALVE (SAI) (78493)	1	FR	
-23	209-48055	ADAPTER, Buddy tanker crossover line	1	FR	
		ATTACHING PARTS			
	AN4-21A	BOLT	3	FR	
	2W18-416M	WASHER, Flat (NA) (89372)	4	FR	
		---*---			
	MS29513-227	PACKING	2	FR	
-24	209-482111	LINE ASSEMBLY, Fuel transfer buddy tanker	1	MD	
-25	209-483228-11	TUBE, Fuel transfer buddy tank	1	ME	
-26	32P-101-1	VALVE ASSEMBLY, Two-way variable (AAPR) (82829)	1	FR	
		ATTACHING PARTS			
-27	AN4-6A	BOLT	4	FR	
-28	2W18-416M	WASHER, Flat (NA) (89372)	8	FR	
-29	AN363C428	NUT	4	FR	
		---*---			
-30	MS29513-137	PACKING	1	FR	
-31	CF14-200	COUPLING (MAR) (98625) (supersedes C11-11200 (MAR) (98625) and/or C11-21200 (MAR) (98625) for future procurement)	1	FR	
-32	MS29513-139	PACKING	1	ME	
-33	209-483229	TRANSFER TEE, Refeling forward tank	1	ME	
		ATTACHING PARTS			
-34	AN4-6A	BOLT	4	ME	
-35	2W18-416M	WASHER, Flat (NA) (89372)	8	ME	
-36	AN363C428	NUT	4	ME	
		---*---			
-37	209-48126	LINE ASSEMBLY, Inflight refueling LH wing probe inboard	1	FR	
-38	209-48802-67	LINE ASSEMBLY, Drop tank transfer inboard LH	1	FR	
-39	209-48802-57	LINE ASSEMBLY, Drop tank transfer outboard LH	1	FR	
-40	209-48802-29	LINE ASSEMBLY, Outboard drop tank transfer inboard LH	1	FR	
-41	209-48802-34	LINE, Drop tank transfer	1	FR	
-42	209-48802-35	LINE ASSEMBLY, Outboard drop tank transfer outboard LH	1	MD	
-43	209-48215	FITTING ASSEMBLY, Canted station 180.906 fuel	1	MD	
-44	209-483234	FITTING ASSEMBLY, Fuel canted station 180.906	1	ME	
		ATTACHING PARTS			
	AN4-10A	BOLT	7	FR	
	2W18-416	WASHER, Flat (NA) (89372)	7	FR	
	MS29513-243	PACKING	1	FR	
		---*---			
	1185-06CNx-.207	. INSERT, Heli-coil (AF) (91767)	2	FR	
	6-2001	. VALVE, Check (SAHR) (96736) (interchangeable with 37181-1 (KOE) (75361))	2	FR	
		ATTACHING PARTS			
	AN500A6-5	. SCREW	2	FR	
	2W1AL12-8-32	. WASHER, Plain (NA) (89372)	2	FR	
		---*---			
-45	3605-20D	COUPLING, Flexible (WIG) (79326)	4	FR	
	3605-20D-3	. NUT, Coupling (WIG) (79326)	1	FR	
	3601-20D-9	. WASHER, Coupling (WIG) (79326)	2	FR	
	3605-20D-24	. RETAINER HALF, Coupling (WIG) (79326)	2	FR	
	3601-20D-1	. BODY, Coupling (WIG) (79326)	1	FR	

TRANSFER SYSTEM - APPLICABLE TO AIRCRAFT CODED (FR)

FIGURE & INDEX NO.	PART NUMBER	1 2 3 4 5 6 7 NOMENCLATURE	UNITS PER ASSY.	USABLE ON CODE	S/C NO.
100	MS29513-218	PACKING	8	FR	
-46	209-48801-163	TUBE, Forward fuselage fuel cell to wing transfer pump	1	FR	
-47	3655-20D	COUPLING, Flexible half (WIG) (79326)	5	FR	
	3605-20D-3	. NUT, Coupling (WIG) (79326)	1	FR	
	3601-20D-9	. WASHER, Coupling (WIG) (79326)	2	FR	
	MS29513-218	PACKING	5	FR	
-48	209-48801-359	LINE, Wing fuel transfer to fuselage centerline RH (supersedes 209-48801-105 for future procurement)	1	FR	
-49	209-48170	FITTING ASSEMBLY, Wing fuel transfer at fuselage centerline	1	FR	
	209-48375	. FITTING, Wing fuel transfer "Y"	1	FR	
-50	209-48129-11	PUMP ASSEMBLY, Wing fuel transfer (see figure 108 for breakdown)	1	FR	
-51	209-48801-103	LINE ASSEMBLY, Wing fuel transfer to fuselage centerline LH	1	FR	
-52	MS28741-20-0150	HOSE ASSEMBLY	1	FR	
-53	209-48804	LINE ASSEMBLY, Fuel aft fuselage cell transfer pump to outlet	1	FR	
-54	6-3204	VALVE, Check (SAHR) (96736)	12	FR	
	ATTACHING PARTS				
	AN515-6R10	SCREW	36	FR	
	2W18-6	WASHER, Flat (NA) (89372)	48	FR	
	AN363-032	NUT	24	FR	
	---*---				
-55	6-3204	VALVE, Check (SAHR) (96736)	4	FR	
	ATTACHING PARTS				
	AN500A6-6	SCREW	8	FR	
	2W18-6	WASHER, Flat (NA) (89372)	16	FR	
	---*---				
-56	209-48801-221	TUBE ASSEMBLY, Wing fuel availability RH	1	SP	
-57	AN837-12D	ELBOW	1	SP	
	AN924-12D	NUT	1	SP	
-58	209-48801-217	LINE ASSEMBLY, Wing fuel availability RH	1	SP	
-59	AN832-12D	UNION	1	SP	
	AN924-12D	NUT	1	SP	
-60	209-48801-211	LINE ASSEMBLY, Forward wing fuel availability RH	1	SP	
-61	AN837-12D	ELBOW	1	SP	
	AN924-12D	NUT	1	SP	
	2W18-1216M	WASHER, Flat (NA) (89372)	1	SP	
	209-48817	COVER PLATE ASSEMBLY, Wing fuel pump access provision (LH and RH)	1	MD	
	ATTACHING PARTS				
	HT4M-8	BOLT, 100° countersunk head (HIS) (73197)	10	MD	
	MS29513-10	PACKING	10	MD	
	---*---				
	2772	. DRAIN VALVE ASSEMBLY (KOE) (75361)	1	MD	
	MS29513-125	. PACKING	1	MD	
-62	209-48821-81	LINE ASSEMBLY, Wing fuel scavenger pump air supply RH (see figure 94 for continuation)	1	ME	
-63	209-48801-219	TUBE ASSEMBLY, Wing fuel availability LH	1	SP	
-64	AN837-12D	ELBOW	1	SP	
	AN924-12D	NUT	1	SP	
-65	209-48801-215	LINE ASSEMBLY, Wing fuel availability LH	1	SP	
-66	AN832-12D	UNION	1	SP	
	AN924-12D	NUT	1	SP	
-67	209-48801-211	LINE ASSEMBLY, Forward wing fuel availability LH	1	SP	
-68	AN837-12D	ELBOW	1	SP	
	AN924-12D	NUT	1	SP	
	2W18-1216M	WASHER, Flat (NA) (89372)	1	SP	
-69	AN832-12D	UNION (Used prior to rework of 209-14103-31 and 209-14103-32 only)	2	SQ	
-70	AN924-12D	NUT (Used prior to rework of 209-14103-31 and 209-14103-32 only)	2	SQ	
-71	AN929-12	CAP (Used prior to rework of 209-14103-31 and 209-14103-32 only)	2	SQ	
-72	209-48821-79	LINE ASSEMBLY, Wing fuel scavenger pump air supply LH (see figure 94 for continuation)	1	ME	
-73	209-483196	BELLOWS ASSEMBLY, Drop tank and buddy transfer	1	FR	
	ATTACHING PARTS				
-74	MS29513-240	PACKING	1	FR	
-75	AN4-5A	BOLT	4	FR	
-76	AN4-11A	BOLT	2	FR	
-77	MS29513-10	PACKING	2	FR	
-78	2W18-416M	WASHER, Flat (NA) (89372)	6	FR	
	---*---				
-79	209-483194	. FITTING ASSEMBLY, Drop tank and buddy transfer	1	FR	
	3691-3CNx-.285	. . INSERT, Heli-coil (AF) (91767)	6	FR	
-80	FT-983	. BELLOWS ASSEMBLY (FLTU) (83144) (interchangeable with 91060 (ARW) (91499))	1	FR	
-81	AN3-4A	. BOLT	6	FR	
-82	2W18-10M	. WASHER, Flat (NA) (89372)	6	FR	
-83	4369-300S	COUPLING (MAR) (98625)	1	FR	
-84	209-48151	FITTING, Inflight refueling inboard wing RH	1	FR	
	ATTACHING PARTS				
-85	AN4-11A	BOLT	8	FR	
-86	2W18-416M	WASHER, Flat (NA) (89372)	8	FR	
-87	600-015-1/4	STAT-O-SEAL (WFRC) (83259)	8	FR	
-88	MS29513-244	PACKING	1	FR	
	---*---				
-89	MS29513-226	PACKING	1	FR	
	3655-20D	COUPLING, Flexible half (WIG) (79326)	2	FR	

TRANSFER SYSTEM - APPLICABLE TO AIRCRAFT CODED (FR)

FIGURE & INDEX NO.	PART NUMBER	1 2 3 4 5 6 7 NOMENCLATURE	UNITS PER ASSY.	USABLE ON CODE	S/C NO.
100-90	3605-20D-3	. NUT, Coupling (WIG) (79326)	2	FR	
-91	3601-20D-9	. WASHER, Coupling (WIG) (79326)	4	FR	
-92	MS29513-218	PACKING	2	FR	
	3655-32D	COUPLING, Flexible half (WIG) (79326)	1	FR	
-93	3605-32D-3	. NUT, Coupling (WIG) (79326)	1	FR	
-94	3601-32D-9	. WASHER, Coupling (WIG) (79326)	2	FR	
-95	MS29513-329	PACKING	1	FR	
-96	209-48154	NUT, 2-inch fuel line coupling male	2	FR	
-97	209-48123	SLEEVE, Fuel line connector 2-inch OD	8	FR	
-98	4178-32	RING (Rubber-Teck Sales and Service Co) (98159)	2	FR	
-99	209-48155	NUT, 2-inch fuel line coupling male	2	FR	
-100	209-48123	SLEEVE, Fuel line connector 2-inch OD	4	FR	
-101	209-48155	NUT, 2-inch fuel line coupling male	2	FR	
-102	209-483152-11	FITTING ASSEMBLY, Drop tank fuel BL 105 LH (supersedes 209-483152-1 for future procurement)	1	FR	
	209-483152-1	FITTING ASSEMBLY, Drop tank fuel BL 105 LH (superseded by 209-483152-11 for future procurement)	1	FR	
-103	209-483152-12	FITTING ASSEMBLY, Drop tank fuel BL 105 RH (supersedes 209-483152-2 for future procurement)	1	FR	
	209-483152-2	FITTING ASSEMBLY, Drop tank fuel BL 105 RH (superseded by 209-483152-12 for future procurement)	1	FR	
	ATTACHING PARTS				
-104	HT4M-16	BOLT, 100° countersunk head (HIS) (73197)(used on 209-483152-11 only)	3	FR	
-105	HT4M-16	BOLT, 100° countersunk head (HIS) (73197) (used on 209-483152-12 only)	2	FR	
-106	MS29513-10	PACKING (used on 209-483152-11 only)	3	FR	
-107	MS29513-10	PACKING (used on 209-483152-12 only)	2	FR	
	---*---				
	911-36CNx-3/4	. INSERT, Heli-coil (AF) (91767)	2	FR	
-108	MS29513-145	PACKING	2	FR	
-109	209-483164	PLUG, Drop tank fuel BL 105	2	FR	
-110	209-48046	NUT, Fuel line coupling male 1-inch	4	FR	
-111	209-48045	SLEEVE, Fuel line connector 1-inch	8	FR	
-112	4178-16	RING (Rubber-Teck Sales and Service Co) (98159)	4	FR	
-113	209-48047	NUT, Fuel line coupling female 1-inch	4	FR	
-114	209-483154-11	FITTING ASSEMBLY, Drop tank fuel BL 153 LH (supersedes 209-483154-1 for future procurement)	1	FR	
	209-483154-1	FITTING ASSEMBLY, Drop tank fuel BL 153 LH (superseded by 209-483154-11 for future procurement	1	FR	
-115	209-483154-12	FITTING ASSEMBLY, Drop tank fuel BL 153 RH (supersedes 209-483154-2 for future procurement)	1	FR	
	209-483154-2	FITTING ASSEMBLY, Drop tank fuel BL 153 RH (superseded by 209-483154-12 for future procurement)	1	FR	
	ATTACHING PARTS				
-116	HT4M-16	BOLT, 100° countersunk head (HIS) (73197) (used on 209-483154-11 only)	4	FR	
-117	HT4M-16	BOLT, 100° countersunk head (HIS) (73197) (used on 209-483154-12 only)	2	FR	
-118	MS29513-10	PACKING (used on 209-483154-11 only)	4	FR	
-119	MS29513-10	PACKING (used on 209-483154-12 only)	2	FR	
	---*---				
-120	MS29513-228	PACKING	2	FR	
-121	209-483211	FITTING, Fuel 150 gallon drop tank upper	2	FR	
-122	209-483213	RING, Fuel 150 gallon drop tank retainer	2	FR	
-123	MS29513-125	PACKING	2	FR	
-124	MS29513-232	PACKING	2	FR	
-125	209-483215	PLUG, Fuel 150 gallon drop tank wing	2	FR	
-126	209-483158	FITTING ASSEMBLY, Inflight refueling probe	1	FR	
-127	209-483157	. FITTING, Inflight refueling probe	1	FR	
-128	MS29513-234	. PACKING	1	FR	
-129	15-7300-3	. VALVE (SAHR) (96736)	1	FR	
-130	NAS50-325	. RING	1	FR	
-131	MS29513-238	PACKING	1	FR	
-132	194-48843	RETAINER, Extended wet leading edge wing probe fitting	1	FR	
-133	3601-32D-9	WASHER (WIG) (79326)	2	FR	
-134	MS29513-329	PACKING	1	FR	
-135	194-48851	CAP, Extended wet leading edge inflight refueling	1	FR	
-136	209-48283	BELLOWS ASSEMBLY, Inflight refueling forward fuselage cell	1	FR	
	ATTACHING PARTS				
-137	AN4-11A	BOLT	2	FR	
-138	2W18-416M	WASHER, Flat (NA) (89372)	6	FR	
-139	MS29513-10	PACKING	2	FR	
-140	600-015-1/4OS	STAT-O-SEAL (WFRC) (83259)	2	SR	
-141	AN4-5A	BOLT	4	FR	
-142	MS29513-240	PACKING	1	FR	
	---*---				
-143	209-48222	. FITTING ASSEMBLY, Inflight refueling line forward fuselage cell	1	FR	
	1191-3CNx-.285	. . INSERT, Heli-coil (AF) (91767)	6	FR	
-144	FT-983	. BELLOWS ASSEMBLY (FLTU) (83144) (interchangeable with 91060 (ARW) (91499))	1	FR	
-145	AN3H4A	. BOLT	6	FR	
-146	2W18-10M	. WASHER, Flat (NA) (89372)	6	FR	
-147	4369-300S	COUPLING (MAR) (98625)	1	FR	
-148	209-48151	FITTING, Inflight refueling inboard wing LH	1	FR	
	ATTACHING PARTS				
-149	AN4-11A	BOLT	8	FR	

TRANSFER SYSTEM - APPLICABLE TO AIRCRAFT CODED (FR)

FIGURE & INDEX NO.	PART NUMBER	1 2 3 4 5 6 7	NOMENCLATURE	UNITS PER ASSY.	USABLE ON CODE	S/C NO.
100-150	2W18-416M		WASHER, Flat (NA) (89372)	8	FR	
-151	600-015-1/4		STAT-O-SEAL (WFRC) (83259)	8	FR	
-152	MS29513-244		PACKING	1	FR	
		---*---				
-153	MS29513-226		PACKING	1	FR	
	209-48118		HOUSING ASSEMBLY, Wing fuel transfer strainer	1	FR	
-154	209-48175		. PLUG, Wing fuel transfer screen	1	FR	
-155	MS29512-30		. PACKING	1	FR	
-156	209-48177		. SPRING, Compression	1	FR	
-157	209-48176		. STRAINER ASSEMBLY, Wing fuel transfer	1	FR	
-158	209-48171-1		. HOUSING, Strainer valve transfer outlet wing LH	1	FR	
-159	AN4-10A		BOLT	2	FR	
-160	AN4-17A		BOLT	2	FR	
-161	2W18-416M		WASHER, Flat (NA) (89372)	10	FR	
-162	AN364-428		NUT	4	FR	
-163	MS29513-144		PACKING	1	FR	
-164	209-481118		OUTLET ASSEMBLY, Fuel transfer inboard wing BL 36.250 LH	1	FR	
	ATTACHING PARTS					
-165	AN4-13A		BOLT	4	FR	
-166	2W18-418		WASHER, Flat (NA) (89372)	4	FR	
		---*---				
-167	1111-548382		. VALVE (PAET) (92003) (interchangeable with 6-2004 (SAHR) (96736))	1	FR	
-168	AN500A6-5		. SCREW	2	FR	
-169	2W18-6L		. WASHER, Flat (NA) (89372)	2	FR	
-170	209-48198-11		. ADAPTER, Fuel pump transfer and vent inboard wing	1	FR	
	1185-06CNx-.207		. . INSERT, Heli-coil (AF) (91767)	2	FR	
-171	MS29513-128		PACKING	1	FR	
-172	209-483161-1		PICKUP ASSEMBLY, Fuel transfer wing LH	1	FR	
-173	209-483161-2		PICKUP ASSEMBLY, Fuel transfer wing RH	1	FR	
-174	AN509-416-13		. SCREW	4	FR	
-175	2W18-416		. WASHER, Flat (NA) (89372)	4	FR	
-176	AN364-428		. NUT	4	FR	
-177	209-483161-11		. PICKUP SUB-ASSEMBLY, Fuel transfer wing LH	1	FR	
	209-483161-12		. PICKUP SUB-ASSEMBLY, Fuel transfer wing RH	1	FR	
-178	209-483162-1		. PICKUP, Fuel transfer wing LH	1	FR	
	209-483162-2		. PICKUP, Fuel transfer wing RH	1	FR	
-179	MS29512-20		GASKET	2	FR	
-180	20162-21		COUPLING (EAAC) (19069) (20162-21 (EAAC) (19069) (together with 20163-2 (EAAC) (19069) supersede 20060-21 (EAAC) (19069) together with 20060-41 (EAAC) (19069) for future procurement)	1	FR	439
-181	20163-2		COUPLING (EAAC) (19069) (20163-2 (EAAC) (19069)(together with 20162-21 (EAAC) (19069) supersede 20060-41 (EAAC) (19069) together with 20060-21 (EAAC) (19069) for future procurement)	1	FR	439
-182	AN4-5A		BOLT	5	FR	
-183	AN4H5A		BOLT	1	FR	
-184	2W18-416		WASHER, Flat (NA) (89372)	6	FR	
-185	AN520-10R8		SCREW	6	FR	
-186	2W18-10M		WASHER, Flat (NA) (89372)	6	FR	
-187	209-48414		CUP, Fuel aft fuselage cell transfer outlet	1	FR	
-188	209-48412		FITTING ASSEMBLY, Fuel aft fuselage cell transfer outlet	1	FR	
-189	209-48413		. FITTING, Fuel aft fuselage cell transfer outlet	1	FR	
-190	181-48068		. GASKET, Aft fuel cell transfer fitting	1	FR	
-191	1111-518038		. VALVE (PAET) (92003)	1	FR	
-192	AN502-10-8		. SCREW	4	FR	
-193	MS29513-237		PACKING	1	FR	
-194	209-48432		DOOR, Fuel cell aft fuselage access	1	FR	
	ATTACHING PARTS					
-195	180-948040-5		SEAL, Forward fuselage tank boost pump access door (NA Dwg Design Spec)	1	FR	
-196	AN4-5A		BOLT	20	FR	
-197	2W18-416M		WASHER, Flat (NA) (89372)	20	FR	
		---*---				
	3591-4CNx-1/2		. INSERT, Heli-coil (AF) (91767)	8	FR	
-198	CCA4300		VALVE ASSEMBLY, Aft fuel cell access door drain (CTAD) (82254)	1	FR	
-199	MS29512-4		GASKET	1	FR	
-200	F8300-24		FLOAT SWITCH ASSEMBLY (RCO) (50625) (see Electrical and Instrument)	1	FR	
-201	MS92512-5		GASKET	1	FR	
-202	2W18-816M		WASHER, Flat (NA) (89372)	1	FR	
-203	AN364-820		NUT	1	FR	
-204	TB116900	*1	PUMP ASSEMBLY, Fuel boost (TP) (59875) (interchangeable with RG-11510-C (RO) (51663))	1	FR	
-205	RG-11510-C	*1	PUMP ASSEMBLY, Fuel boost (RO) (51663) (interchangeable with TB116900 (TP) (59875))	1	FR	
	ATTACHING PARTS					
-206	MS29513-252		PACKING	1	FR	
-207	209-48422		CLIP, Fuel aft fuselage cell access door support aft	2	FR	
-208	AN4H6A		BOLT	8	FR	
-209	2W18-416M		WASHER, Flat (NA) (89372)	8	FR	
		---*---				
-210	CCA4300		VALVE ASSEMBLY, Aft pump fuel drain (CTAD) (82254)	1	FR	
-211	MS29512-5		PACKING	1	FR	
-212	209-48426		ELBOW, Fuel aft fuselage cell transfer pump outlet	1	FR	
-213	AN76A47		BOLT	1	FR	
-214	MS29513-12		PACKING	1	FR	
-215	2W17-616M		WASHER, Corrosion-resistant (NA) (89372)	1	FR	

TRANSFER SYSTEM - APPLICABLE TO AIRCRAFT CODED (FR)

FIGURE & INDEX NO.	PART NUMBER	1 2 3 4 5 6 7 NOMENCLATURE	UNITS PER ASSY.	USABLE ON CODE	S/C NO.
100-215	MS29513-12	PACKING	1	FR	
-216	2W17-616M	WASHER, Corrosion-resistant (NA) (89372)	1	FR	
-217	10C2B13-1	CONDUIT (NA) (89372)	1	FR	
-218	187-48370	NIPPLE, Fuel boost pump seal drain	1	FR	
-219	MS29512-4	PACKING	1	FR	
-220	209-481119	VALVE ASSEMBLY, Wing fuel transfer check RH (see figure 106 for breakdown)	1	FR	
-221	209-48366	GUIDE, Fuel transfer to forward cell	1	FR	
	ATTACHING PARTS				
	AN3-6A	BOLT	2	FR	
	2W1AL-14-24-32	WASHER, Plain (NA) (89372)	4	FR	
	AN365-1032	NUT	2	FR	
	---*---				
-222	209-48365	FAIRLEAD, Fuel transfer to forward cell	1	FR	
	ATTACHING PARTS				
	AN3-4A	BOLT	1	FR	
	2W18-10M	WASHER, Flat (NA) (89372)	2	FR	
	AN365-1032	NUT	1	FR	
	---*---				

NOTE: *1 N50-200S together with RS-5-200 supersede CF-14-200 (MAR) (98625) which supersedes C11-11200 (MAR) (98625) and/or C11-21200 (MAR) (98625) for future procurement
*2 Supersedes 122637-221-02 (PE) (77200) and/or 122637-220-04 (PE) (77200) together with 12-557 (PE) (77200) and MS29513-28 for future procurement

THIS PAGE LEFT BLANK INTENTIONALLY

REFUELING SYSTEM - APPLICABLE TO AIRCRAFT CODED (MD)

FIGURE & INDEX NO.	PART NUMBER	1 2 3 4 5 6 7 NOMENCLATURE	UNITS PER ASSY.	USABLE ON CODE	S/C NO.
101-1	209-48206-11	RECEPTACLE ASSEMBLY, Single-point refuel and defuel unit (superseded by 209-48206-31 for future procurement) (for breakdown see Technical Manual NAVAER 03-10-ABN503)	1	NT	
	209-48206-31	RECEPTACLE ASSEMBLY, Single-point refuel and defuel unit (supersedes 209-48206-11 for future procurement) (see figure 110 for breakdown)	1	KX	
-2	AN4-5A	BOLT	8	MD	
-3	2W18-416M	WASHER, Flat (NA) (89372)	8	MD	
-4	MS29513-350	PACKING	1	MD	
-5	209-48295	LINE ASSEMBLY, Defuel forward fuselage	1	MD	
	MS29513-222	PACKING	1	MD	
-6	32P-101-1	VALVE ASSEMBLY, Two-way variable (AAPR) (82829)	1	MD	
	ATTACHING PARTS				
-7	AN363C428	NUT	4	MD	
-8	2W18-416M	WASHER, Flat (NA) (89372)	8	MD	
-9	AN4-6A	BOLT	4	MD	
	---*---				
-10	MS29513-137	PACKING	1	MD	
-11	C11-21200	COUPLING (MAR) (98625) (superseded by F14-200 (MAR) (98625) for future procurement)	1	MD	
	CF14-200	COUPLING (MAR) (98625) (supersedes C11-21200 (MAR) (98625) for	1	MD	
-12	209-482111	LINE ASSEMBLY, Fuel transfer buddy tanker	1	MD	
-13	209-482110	LINE ASSEMBLY, Drop tank fitting to cross manifold station 151.369	1	MD	
-14	209-483196	BELLOWS ASSEMBLY, Drop tank and buddy transfer (see figure 100 for breakdown and attaching parts)	1	MD	
-15	209-48621-53	LINE ASSEMBLY, RH variable check valve to RH cell fitting	1	MD	
-16	20P-103-11	VALVE ASSEMBLY (AAPR) (82829)	1	MD	
-17	3655-20D	COUPLING (WIG) (79326)	1	MD	
	3601-20D-9	. WASHER (WIG) (79326)	2	MD	
	MS28513-218	PACKING	1	MD	
-18	209-48255	LINE ASSEMBLY, Weld RH drop tank forward fuselage fuel cell	1	MD	
	ATTACHING PARTS				
-19	AN4-6A	BOLT	4	MD	
-20	AN363C428	NUT	4	MD	
-21	2W18-410	WASHER, Flat (NA) (89372)	8	MD	
	---*---				
-22	MS29513-125	PACKING	1	MD	
-23	209-48126	LINE ASSEMBLY, Inflight refueling wing probe inboard (LH only)	1	MD	
-24	209-48802-67	LINE ASSEMBLY, Inflight refueling wing probe	1	MD	
-25	209-481102-11	PROBE ASSEMBLY, Inflight refueling (see figure 121 for breakdown)	1	MD	
-26	1111-548062	CHECK VALVE (PAET) (92003)	1	MD	
	MS29512-20	GASKET	1	MD	
-27	209-48358	STANDPIPE ASSEMBLY, Single-point refueling forward fuselage fuel cell	1	MD	
-28	C11-21200	COUPLING (MAR) (98625) (superseded by CF14-200 (MAR) (98625) for future procurement)	1	MD	
	CF14-200	COUPLING (MAR) (98625) (supersedes C11-21200 (MAR) (98625) for future procurement)	1	MD	
-29	209-481116	VALVE ASSEMBLY, Single-point refueling limiter fuel flow control	1	MD	
-30	209-481115	. TUBE ASSEMBLY, Single-point refueling assembly to cross	1	MD	
	MS29513-229	. PACKING	1	MD	
-31	6124	. CONTROL VALVE (CAJC) (86090)	1	MD	
	AN365-524	. NUT	4	MD	
	2W18-516M	. WASHER, Flat (NA) (89372)	8	MD	
	AN5H7A	. BOLT	4	MD	
-32	3655-32D	COUPLING (WIG) (79326)	1	MD	
	3601-32D-9	. WASHER (WIG) (79326)	2	MD	
	MS29513-329	PACKING	1	MD	
-33	209-48054	CROSS, Single-point refueling to wing aft fuselage and buddy tanker	1	MD	
	3591-4CNx-1/2	. INSERT, Heli-coil (AF) (91767)	4	MD	
	3591-3CNx-.38	. INSERT, Heli-coil (AF) (91767)	3	MD	
-34	209-48055	ADAPTER, Buddy tank crossover line	1	MD	
-35	209-540137	CLIP, Electric clamp mounting	1	MD	
-36	MS29513-226	PACKING	2	MD	
-37	AN4-22A	BOLT	1	MD	
-38	AN4-21A	BOLT	3	MD	
-39	2W18-416	WASHER, Flat (NA) (89372)	1	MD	
-40	2W18-416M	WASHER, Flat (NA) (89372)	4	MD	
-41	08-17180F	VALVE, Gate (SAI) (78493)	1	MD	
-42	MS29513-227	PACKING	2	MD	
-43	MS29513-222	PACKING	2	MD	
	3655-32D	COUPLING, Flexible half (WIG) (79326)	1	MD	
-44	3605-32D-3	. NUT, Coupling (WIG) (79326)	1	MD	
-45	3601-32D-9	. WASHER, Coupling (WIG) (79326)	2	MD	
-46	MS29513-329	PACKING	1	MD	
-47	AN3-4A	BOLT	3	MD	
-48	2W18-10M	WASHER, Flat (NA) (89372)	3	MD	
-49	209-48436	SUPPORT, Forward fuel cell buddy tank transfer 1-1/4 inch gate valve assembly of	1	MD	
	ATTACHING PARTS				
-50	AN74A15	BOLT	2	MD	
-51	AN74A16	BOLT	1	MD	
-52	600-015-1/4	STAT-O-SEAL (WFRC) (83259)	3	MD	
-53	2W18-416M	WASHER, Flat (NA) (89372)	3	MD	
	---*---				

REFUELING SYSTEM - APPLICABLE TO AIRCRAFT CODED (MD)

FIGURE & INDEX NO.	PART NUMBER	1 2 3 4 5 6 7 NOMENCLATURE	UNITS PER ASSY.	USABLE ON CODE	S/C NO.
101	3591-4CNx-1/2	. INSERT, Heli-coil (AF) (91767)	4	MD	
-54	209-48256-31	LINE ASSEMBLY, Cross manifold to LH wing tank interconnector (supersedes 209-48256 for future procurement)	1	MD	
	MS29513-222	PACKING	1	MD	
-55	209-48135	LINE ASSEMBLY, Single-point refueling inboard	1	MD	
-56	209-48801-323	LINE, Wing single-point refueling LH	1	MD	
-57	209-48256-2	LINE ASSEMBLY, Cross manifold to RH wing tank interconnector	1	MD	
	MS29513-222	PACKING	1	MD	
-58	209-48135	LINE ASSEMBLY, Single-point refueling inboard	1	MD	
-59	209-48802-62	LINE, Wing single-point refueling RH	1	MD	
-60	209-48291	LINE ASSEMBLY, Single-point refueling forward to aft cell	1	MD	
	MS29513-222	PACKING	1	MD	
	3605-20D	COUPLING (WIG) (79326)	1	MD	
-61	3601-20D-1	. BODY (WIG) (79326)	1	MD	
-62	3601-20D-9	. WASHER (WIG) (79326)	2	MD	
-63	3605-20D-24	. RETAINER HALF (WIG) (79326)	2	MD	
-64	3605-20D-3	. NUT (WIG) (79326)	1	MD	
-65	MS29513-218	PACKING	2	MD	
-66	209-48378	LINE ASSEMBLY, Single-point refueling fuselage station 180.906 to fuselage station 206	1	MD	
-67	209-48379	GUIDE ASSEMBLY, Single-point refueling line station 195	1	MD	
	ATTACHING PARTS				
	AN3-20A	BOLT	2	MD	
	2W18-10M	WASHER, Flat (NA) (89372)	2	MD	
	---*---				
-68	209-48297	HOSE ASSEMBLY, Refueling aft cell disconnect	1	MD	
	700H24	. SOCKET ASSEMBLY (WIG) (79326)	1	MD	
-69	209-48283	BELLOWS ASSEMBLY, Inflight refueling forward fuselage cell	1	MD	
	ATTACHING PARTS				
-70	AN4-11A	BOLT	2	MD	
-71	2W18-416M	WASHER, Flat (NA) (89372)	2	MD	
-72	MS29513-10	PACKING	2	MD	
-73	AN4-5A	BOLT	4	MD	
-74	2W18-416M	WASHER, Flat (NA) (89372)	4	MD	
	---*---				
-75	209-48222	. FITTING ASSEMBLY, Inflight refueling line forward fuselage cell	1	MD	
-76	FT-983	. BELLOWS ASSEMBLY (FLTU) (83144) (interchangeable with 91060 (ARW) (91499)	1	MD	
-77	AN3H4A	. BOLT	6	MD	
-78	2W18-10M	. WASHER, Flat (NA) (89372)	6	MD	
-79	MS29513-240	PACKING	1	MD	
-80	4369-300S	COUPLING (MAR) (98625)	1	MD	
-81	209-48151	FITTING, Inflight refueling inboard wing LH	1	MD	
	ATTACHING PARTS				
-82	AN4-11A	BOLT	8	MD	
-83	2W18-416M	WASHER, Flat (NA) (89372)	8	MD	
-84	600-015-1/4	STAT-O-SEAL (WFRC) (83259)	8	MD	
	---*---				
-85	MS29513-244	PACKING	1	MD	
-86	MS29513-266	PACKING	1	MD	
-87	209-48154	NUT, Two inch fuel line coupling male	1	MD	
-88	209-48123	SLEEVE, Fuel line connector two inch OD	2	MD	
-89	4178-32	RING (Rubber-Teck Sales and Service Co.) (98159)	1	MD	
-90	209-48155	NUT, Two inch fuel line coupling female	1	MD	
-91	209-483158	FITTING ASSEMBLY, Inflight refueling probe	1	MD	
-92	209-483157	. FITTING ASSEMBLY, Inflight refueling probe	1	MD	
-93	MS29513-234	. PACKING	1	MD	
-94	15-7300-3	. VALVE ASSEMBLY (SAHR) (96736)	1	MD	
-95	NAS50-325	. RING	1	MD	
-96	MS29513-238	PACKING	1	MD	
-97	194-48843	RETAINER, Extended wet leading edge wing probe fitting (superseded by 194-48843-3 for future procurement)	1	MD	
	194-48843-3	RETAINER, Extended wet leading edge wing probe fitting (supersedes 194-48843 for future procurement)	1	MD	
-98	3601-32-9D	WASHER (WIG) (79326)	2	MD	
-99	MS29513-329	PACKING	1	MD	
-100	194-48851	CAP, Extended wet leading edge inflight refueling	1	MD	
-101	209-48333	BELLOWS ASSEMBLY, Single-point refueling forward fuselage cell	1	MD	
	ATTACHING PARTS				
-102	AN4-11A	BOLT	2	MD	
-103	2W18-416M	WASHER, Flat (NA) (89372)	2	MD	
-104	MS29513-10	PACKING	2	MD	
-105	AN4-5A	BOLT	4	MD	
-106	2W18-416M	WASHER, Flat (NA) (89372)	4	MD	
	---*---				
-107	209-48332	. FITTING ASSEMBLY, Single-point refueling line forward fuel cell	1	MD	
	1191-3CNx-.285	. . INSERT, Heli-coil (AF) (91767)	6	MD	
-108	91050	. BELLOWS ASSEMBLY (ARW) (91499) (superseded by 91142 (ARW) (91499) for future procurement)	1	MD	
	91142	. BELLOWS ASSEMBLY (ARW) (91499) (supersedes 91050 (ARW) (91499) for future procurement)	1	MD	
-109	AN3H3A	. BOLT	6	MD	
-110	2W18-10M	. WASHER, Flat (NA) (89372)	6	MD	

REFUELING SYSTEM - APPLICABLE TO AIRCRAFT CODED (HD)

FIGURE & INDEX NO.	PART NUMBER	1 2 3 4 5 6 7 NOMENCLATURE	UNITS PER ASSY.	USABLE ON CODE	S/C NO.
102-1	209-48206-31	RECEPTACLE ASSEMBLY, Single-point refuel and defuel unit (supersedes 209-48206-11 for future procurement) (see figure 110 for breakdown)	1	HD	
		ATTACHING PARTS			
-2	MS29513-250	PACKING	1	HD	
-3	AN4-5A	BOLT	8	HD	
-4	2W18-416M	WASHER, Flat (NA) (89372)	8	HD	
		---*---			
-5	209-48295	LINE ASSEMBLY, Defuel forward fuselage fuel cell	1	HD	
-6	MS29513-222	PACKING	1	HD	
-7	32P-101-1	VALVE ASSEMBLY, Two-way variable (AAPR) (82829)	1	HD	
		ATTACHING PARTS			
-8	AN4-6A	BOLT	4	HD	
-9	2W18-416M	WASHER, Flat (NA) (89372)	8	HD	
-10	AN363C428	NUT	4	HD	
		---*---			
-11	MS29513-137	PACKING	1	HD	
-12	CF14-200	COUPLING (MAR) (98625) (supersedes C11-21200 (MAR) (98625) and/or C11-11200 (MAR) (98625) for future procurement)	1	HD	
-13	209-48601-241	TUBE ASSEMBLY, Variable check valve to drop tank cell fitting LH	1	HD	
-14	209-48126	LINE ASSEMBLY, Inflight refueling wing probe inboard (LH only)	1	HD	
-15	209-48125-11	LINE, Inflight refueling wing probe outboard (LH only)	1	HD	
-16	209-481102	PROBE ASSEMBLY, Inflight refueling (see figure 121 for breakdown)	1	HD	
-17	209-48358	STANDPIPE ASSEMBLY, Single-point refuel forward fuselage fuel cell	1	HD	
-18	CF14-200	COUPLING (MAR) (98625) (supersedes C11-21200 (MAR) (98625) and/or C11-11200 (MAR) (98625) for future procurement)	1	HD	
-19	209-481116	VALVE ASSEMBLY, Single-point refueling limiter fuel flow control	1	HD	
-20	209-481115	. TUBE ASSEMBLY, Single-point refueling assembly to cross	1	HD	
	MS29513-229	. PACKING	1	HD	
	6124	. CONTROL VALVE (CAJC) (86090)	1	HD	
	AN365-524	. NUT	4	HD	
	2W18-516M	. WASHER, Flat (NA) (89372)	8	HD	
	AN5H7A	. BOLT	4	HD	
	3655-32D	COUPLING, Flexible half (WIG) (79326)	1	HD	
-21	3605-32D-3	. NUT, Coupling (WIG) (79326)	1	HD	
-22	3601-32D-9	. WASHER, Coupling (WIG) (79326)	2	HD	
-23	MS29513-329	PACKING	1	HD	
-24	209-48208	CROSS, Single-point refueling to wing tank and aft fuselage tank	1	HD	
	1191-3CNx-.380	. INSERT, Heli-coil (AF) (91767)	3	HD	
-25	AN73-3	BOLT	3	HD	
-26	2W18-10M	WASHER, Flat (NA) (89372)	3	HD	
-27	209-48289	SUPPORT ASSEMBLY, Upper cross manifold single-point refueling	1	HD	
		ATTACHING PARTS			
-28	AN74A14	BOLT	3	HD	
-29	2W18-416M	WASHER, Flat (NA) (89372)	3	HD	
-30	600-015-1/4OS	STAT-O-SEAL (WFRC) (83259)	3	HD	
		---*---			
-31	MS29513-222	PACKING	2	HD	
-32	209-48256-31	LINE ASSEMBLY, Cross manifold to LH wing tank interconnector (supersedes 209-48256 for future procurement)	1	HD	
-33	209-48135	LINE ASSEMBLY, Single-point refueling inboard wing LH	1	HD	
-34	209-48196-1	LINE, Wing single-point refueling LH	1	CT	
-35	209-48801-323	LINE, Wing single-point refueling LH	1	FX	
-36	209-48287	LINE ASSEMBLY, Cross manifold to RH wing tank interconnector	1	HD	
-37	209-48160	LINE ASSEMBLY, Single-point refueling inboard RH	1	HD	
-38	209-48196-2	LINE, Wing single-point refueling RH	1	CT	
-39	209-48801-325	LINE, Wing single-point refueling RH	1	FX	
-40	209-48291	LINE ASSEMBLY, Single-point refuel forward to aft cell	1	HD	
-41	209-48378	LINE ASSEMBLY, Single-point refueling fuselage station 80.908 to fuselage station 206	1	HD	
-42	209-48379	GUIDE ASSEMBLY, Single-point refueling line station 195	1	HD	
		ATTACHING PARTS			
	AN3-20A	BOLT	2	HD	
	2W18-10M	WASHER, Flat (NA) (89372)	2	HD	
		---*---			
-43	209-48297	HOSE ASSEMBLY, Refueling aft cell disconnect	1	HD	
-44	7000H24	. SOCKET ASSEMBLY, 1-1/2 inch self seal fuel (WIG) (79326)	1	HD	
-45	209-48283	BELLOWS ASSEMBLY, Inflight refueling forward fuselage cell	1	HD	
		ATTACHING PARTS			
-46	AN4-11A	BOLT	2	HD	
-47	2W18-416M	WASHER, Flat (NA) (89372)	2	HD	
-48	MS29513-10	PACKING	2	HD	
-49	AN4-5A	BOLT	4	HD	
-50	2W18-416M	WASHER, Flat (NA) (89372)	4	HD	
		---*---			
-51	209-48222	. FITTING ASSEMBLY, Inflight refueling line forward fuselage cell	1	HD	
	1191-3CNx-.285	. . INSERT, Heli-coil (AF) (91767)	6	HD	
-52	FT-983	. BELLOWS ASSEMBLY (FLTU) (83144) (interchangeable with 91060 (ARW) (91499))	1	HD	
-53	AN3H4A	. BOLT	6	HD	
-54	2W18-10M	. WASHER, Flat (NA) (89372)	6	HD	
-55	MS29513-240	PACKING	1	HD	
-56	4369-300S	COUPLING (MAR) (98625)	1	HD	
-57	209-48151	FITTING, Inflight refueling inboard wing (LH only)	1	HD	

REFUELING SYSTEM - APPLICABLE TO AIRCRAFT CODED (HD)

FIGURE & INDEX NO.	PART NUMBER	1 2 3 4 5 6 7 NOMENCLATURE	UNITS PER ASSY.	USABLE ON CODE	S/C NO.
102		ATTACHING PARTS			
-58	AN4-11A	BOLT	8	HD	
-59	2W18-416M	WASHER, Flat (NA) (89372)	8	HD	
-60	600-015-1/4	STAT-O-SEAL (WFRC) (83259)	8	HD	
		---*---			
-61	MS29513-244	PACKING	1	HD	
-62	MS29513-226	PACKING	1	HD	
-63	209-48154	NUT, Two-inch fuel line coupling male	1	HD	
-64	209-48123	SLEEVE, Fuel line connector two-inch OD	4	HD	
-65	4178-32	RING (Rubber Teck Inc) (98159)	1	HD	
-66	209-48155	NUT, Two-inch fuel line coupling female	1	HD	
-67	209-48102-101	FITTING ASSEMBLY, Inflight refueling LH wing probe (supersedes 209-48102 for future procurement)	1	HD	
-68	209-48101-3	. FIT., Inflight refueling probe (supersedes 209-58101 for future procurement)	1	HD	
-69	NAS50-325	. RING	1	HD	
-70	15-7300-3	. VALVE ASSEMBLY (SAHR) (98736)	1	HD	
-71	MS29513-234	. PACKING	1	HD	
-72	194-48851	CAP, Extended wet leading edge inflight refueling	1	HD	
-73	3601-32D-9	WASHER (WIG) (79326)	2	HD	
-74	MS29513-329	PACKING	1	HD	
-75	194-48843	RETAINER, Extended wet leading edge wing probe fitting (superseded by 194-48843-3 for future procurement)	1	HD	
	194-48843-3	RETAINER, Extended wet leading edge wing probe fitting (supersedes 194-48843 for future procurement)	1	HD	
-76	MS29513-238	PACKING	1	HD	
-77	209-48333	BELLOWS ASSEMBLY, Single-point refuel forward fuselage cell	1	HD	
		ATTACHING PARTS			
-78	AN4-11A	BOLT	2	HD	
-79	2W18-416M	WASHER, Flat (NA) (89372)	2	HD	
-80	MS29513-10	PACKING	2	HD	
-81	AN4-5A	BOLT	4	HD	
-82	2W18-416M	WASHER, Flat (NA) (89372)	4	HD	
		---*---			
-83	209-48332	. FITTING ASSEMBLY, Single-point refuel line forward fuel cell	1	HD	
	1191-3CNx-.285	. . INSERT, Heli-coil (AF) (91767)	6	HD	
-84	91142	. BELLOWS ASSEMBLY (ARW) (91499) (supersedes 91050 (ARW) (91499) for future procurement)	1	HD	
-85	AN3H3A	. BOLT	6	HD	
-86	2W18-10M	. WASHER, Flat (NA) (89372)	6	HD	
-87	MS29513-237	PACKING	1	HD	
-88	4369-250S	COUPLING (MAR) (98625)	1	HD	
-89	209-48117-1	FITTING ASSEMBLY, Single-point refueling inboard wing LH	1	HD	
		ATTACHING PARTS			
-90	AN4-11A	BOLT	8	HD	
-91	2W18-416M	WASHER, Flat (NA) (89372)	8	HD	
-92	600-015-1/4-OS	STAT-O-SEAL (WFRC) (83259)	8	HD	
		---*---			
-93	209-48159-1	. FITTING ASSEMBLY, Single-point refueling inboard wing LH	1	HD	
	1185-06CNx-.281	. . INSERT, Heli-coil (AF) (91767)	2	HD	
-94	MS29521-24	. VALVE ELEMENT	1	HD	
-95	AN515-6-6	. SCREW	2	HD	
-96	AN936A6	. WASHER	2	HD	
-97	2W18-6L	. WASHER, Flat (NA) (89372)	2	HD	
-98	MS29513-243	PACKING	1	HD	
-99	MS29513-230	PACKING	1	HD	
-100	209-48152	NUT, 1-1/2 inch fuel line coupling male	1	HD	
-101	209-48124	SLEEVE, Fuel line connector 1-1/2 inch OD	4	HD	
-102	4178-24	RING (Rubber Teck Inc) (98159)	1	HD	
-103	209-48153	NUT, 1-1/2 inch fuel line coupling female	1	HD	
-104	209-48333	BELLOWS ASSEMBLY, Single-point refuel forward fuselage cell	1	HD	
		ATTACHING PARTS			
-105	AN4-11A	BOLT	2	HD	
-106	2W18-416M	WASHER, Flat (NA) (89372)	2	HD	
-107	MS29513-10	PACKING	2	HD	
-108	AN4-5A	BOLT	4	HD	
-109	2W18-416M	WASHER, Flat (NA) (89372)	4	HD	
		---*---			
-110	209-48332	. FITTING ASSEMBLY, Single-point refuel line forward fuel cell	1	HD	
	1191-3CNx-.285	. . INSERT, Heli-coil (AF) (91767)	6	HD	
-111	91142	. BELLOWS ASSEMBLY (ARW) (91499) (supersedes 91050 (ARW) (91499) for future procurement)	1	HD	
-112	AN3H3A	. BOLT	6	HD	
-113	2W18-10M	. WASHER, Flat (NA) (89372)	6	HD	
-114	MS29513-237	PACKING	1	HD	
-115	4369-250S	COUPLING (MAR) (98625)	1	HD	
-116	209-48117-2	FITTING ASSEMBLY, Single-point refueling inboard wing RH	1	HD	
		ATTACHING PARTS			
-117	AN4-11A	BOLT	8	HD	
-118	2W18-416M	WASHER, Flat (NA) (89372)	8	HD	
-119	600-015-1/4-OS	STAT-O-SEAL (WFRC) (83259)	8	HD	
		---*---			
-120	209-48159-2	. FITTING ASSEMBLY, Single-point refueling inboard wing RH	1	HD	
	1185-06CNx-.281	. . INSERT, Heli-coil (AF) (91767)	2	HD	
-121	MS29521-24	. VALVE ELEMENT	1	HD	

REFUELING SYSTEM - APPLICABLE TO AIRCRAFT CODED (HD)

FIGURE & INDEX NO.	PART NUMBER	1 2 3 4 5 6 7 NOMENCLATURE	UNITS PER ASSY.	USABLE ON CODE	S/C NO.
102-122	AN515-6-6	. SCREW	2	HD	
-123	AN936A6	. WASHER	2	HD	
-124	2W18-6L	. WASHER, Flat (NA) (89372)	2	HD	
-125	MS29513-243	PACKING	1	HD	
-126	MS29513-230	PACKING	1	HD	
-127	MS29513-243	PACKING	1	HD	
-128	209-48215	FITTING ASSEMBLY, Canted station 180.906 fuel	1	HD	
	ATTACHING PARTS				
-129	AN4-10A	BOLT	7	HD	
-130	2W18-416	WASHER, Flat (NA) (89372)	7	HD	
	---*---				
-131	6-2001	. VALVE (SAHR) (96736) (interchangeable with 37181-1 (KOE) (75361))	1	HD	
-132	AN500A6-5	. SCREW	2	HD	
-133	2W1AL12-8-32	. WASHER, Flat (NA) (89372)	2	HD	
	1185-06CNx-.207	. INSERT, Heli-coil (AF) (91767)	2	HD	
-134	MS29513-222	PACKING	1	HD	
	3605-20D	COUPLING, Flexible (WIG) (79326)	1	HD	
-135	3605-20D-3	. NUT, Coupling (WIG) (79326)	1	HD	
-136	3601-20D-9	. WASHER, Coupling (WIG) (79326)	2	HD	
-137	3605-20D-24	. RETAINER HALF, Coupling (WIG) (79326)	2	HD	
-138	3601-20D-1	. BODY, Coupling (WIG) (79326)	1	HD	
-139	MS29513-218	PACKING	2	HD	
-140	7005D24	COUPLING (WIG) (79326)	1	HD	
	7005-24-2	. NIPPLE (WIG) (79326)	1	HD	
	A7000-24-810	. VALVE (WIG) (79326)	1	HD	
	6000-24-11	. VALVE SPRING (WIG) (79326)	1	HD	
	A13-141	. "O" RING (WIG) (79326)	1	HD	
	7000D24-15	. END (WIG) (79326)	1	HD	
-141	MS29512-24	GASKET	1	HD	
-142	209-48417	SEAL, Fuel aft fuselage cell refueling inlet	1	HD	
	ATTACHING PARTS				
-143	AN520-10R8	SCREW	6	HD	
-144	2W18-10M	WASHER, Flat (NA) (89372)	6	HD	
	---*---				
-145	209-48431	FITTING ASSEMBLY, Fuel aft fuselage cell refueling unit complete	1	HD	
	ATTACHING PARTS				
-146	AN4-5A	BOLT	6	HD	
-147	2W18-416M	WASHER, Flat (NA) (89372)	6	HD	
	---*---				
-148	209-48430	. FITTING ASSEMBLY, Fuel aft fuselage cell refueling inlet	1	HD	
	RL18SB-6	. . RING (ROSN) (83324)	2	HD	
	RD103SB-5L	. . INSERT (ROSN) (83324)	2	HD	
-149	1111-518113	. VALVE ASSEMBLY (PAET) (92003)	1	HD	
-150	AN515-6R4	. SCREW	2	HD	
-151	MS29513-231	PACKING	1	HD	
-152	MS28741-6-0500	HOSE ASSEMBLY (fuel level control)	2	HD	
-153	AN815-6D	UNION	4	HD	
-154	MS29512-6	PACKING	4	HD	
-155	MS29513-253	PACKING	1	HD	
-156	3-254-91	VALVE, Float level (SZT) (82267) (supersedes 3-254-1 (SZT) (82267) for future procurement) (for breakdown of 3-254-1 (SZT) (82267) see Technical Manual NA 03-10AB-528)	1	HD	
	ATTACHING PARTS				
-157	AN4-5A	BOLT	8	HD	
-158	2W18-416M	WASHER, Flat (NA) (89372)	8	HD	
	---*---				
-159	209-48290	BRACKET, Remote fuel level control float	1	HD	
	ATTACHING PARTS				
-160	AN3-4A	BOLT	6	HD	
-161	2W18-10M	WASHER, Flat (NA) (89372)	12	HD	
-162	AN365-1032	NUT	6	HD	
	---*---				

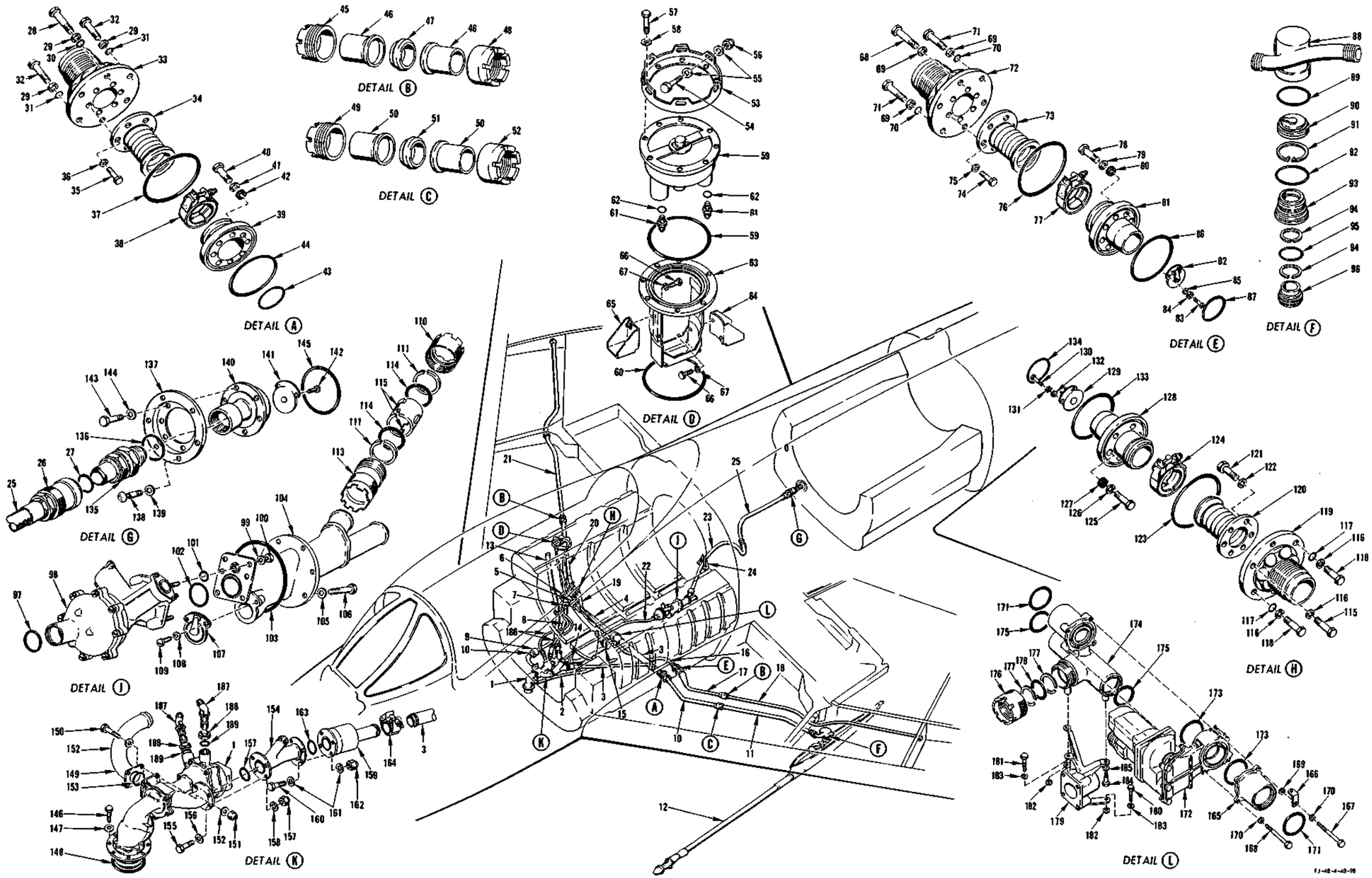

FIGURE 103- REFUELING SYSTEM - APPLICABLE TO AIRCRAFT CODED (ME)

REFUELING SYSTEM - APPLICABLE TO AIRCRAFT CODED (ME)

FIGURE & INDEX NO.	PART NUMBER	1 2 3 4 5 6 7 NOMENCLATURE	UNITS PER ASSY.	USABLE ON CODE	S/C NO.
103-1	209-48206-31	RECEPTACLE ASSEMBLY, Single point refuel and defuel unit (supersedes 209-48206-11 for future procurement) (see figure 110 for breakdown)	1	ME	
-2	209-48295	LINE ASSEMBLY, Defuel forward fuselage fuel cell	1	ME	
-3	209-483228-11	TUBE, Fuel transfer buddy tank assembly of	1	ME	
-4	209-482110	LINE ASSEMBLY, Drop tank fitting to cross manifold station 151.369	1	ME	
-5	3655-32D	COUPLING, Flexible half (WIG) (79326)	1	ME	
	3605-32D-3	. NUT, Coupling (WIG) (79326)	1	ME	
	3601-32D-9	. WASHER, Coupling (WIG) (79326)	2	ME	
	MS29513-329	PACKING	1	ME	
-6	209-483196	BELLOWS ASSEMBLY, Drop tank and buddy transfer (see figure 100 for breakdown and attaching parts)	2	ME	
-7	3655-20D	COUPLING, Flexible half (WIG) (79326)	4	ME	
	3605-20D-3	. NUT, Coupling (WIG) (79326)	2	ME	
	3601-20D-9	. WASHER, Coupling (WIG) (79326)	4	ME	
	MS29513-218	PACKING	4	ME	
-8	209-48821-53	LINE ASSEMBLY, RH variable check valve to RH cell fitting	1	ME	
-9	20P-103-11	VALVE ASSEMBLY (AAPR) (82829)	1	ME	
-10	209-48126	LINE ASSEMBLY, Inflight refueling wing probe inboard LH	1	ME	
-11	209-48802-62	LINE ASSEMBLY, Inflight refueling wing probe	1	ME	
-12	209-481102	PROBE ASSEMBLY, Inflight refueling (see figure 121 for breakdown)	1	ME	
-13	209-48358	STANDPIPE ASSEMBLY, Single point refueling forward fuselage fuel cell	1	ME	
-14	C11-21200	COUPLING (MAR) (98625) (superseded by CF14-200 (MAR) (98625) for future procurement)	1	ME	
	CF14-200	COUPLING (MAR) (98625) (supersedes C11-21200 (MAR) (98625) for future procurement)	1	ME	
-15	209-48821-88	LINE, Single point refueling assembly to cross	1	ME	
-16	209-48256-31	LINE ASSEMBLY, Cross manifold to LH wing tank interconnector	1	ME	
-17	209-48135	LINE ASSEMBLY, Single point refueling inboard	1	ME	
-18	209-48801-323	LINE, Wing single point refueling LH	1	ME	
-19	209-48256-2	LINE ASSEMBLY, Cross manifold to RH wing tank interconnector	1	ME	
-20	209-48135	LINE ASSEMBLY, Single point refueling inboard	1	ME	
-21	209-48802-62	LINE, Wing single point refueling RH	1	ME	
-22	209-48410	LINE ASSEMBLY, Fuel transfer forward cell	1	ME	
-23	209-48378	LINE ASSEMBLY, Single point refueling fuselage station 180.906 to fuselage station 206	1	ME	
-24	209-48379	GUIDE ASSEMBLY, Single point refueling line station 195	1	ME	
	ATTACHING PARTS				
	AN3-20A	BOLT	2	ME	
	2W18-10M	WASHER, Flat (NA) (89372)	2	ME	
	---*---				
-25	209-48297	HOSE ASSEMBLY, Refueling aft cell disconnect	1	ME	
-26	7000H24	. SOCKET ASSEMBLY, 1-1/2 inch self seal fuel (WIG) (79326)	1	ME	
-27	MS29513-130	. . PACKING	1	ME	
	209-48283	BELLOWS ASSEMBLY, Inflight refueling forward fuselage cell	1	ME	
	ATTACHING PARTS				
-28	AN4-11A	BOLT	2	ME	
-29	2W18-416M	WASHER, Flat (NA) (89372)	6	ME	
-30	600-015-1/4OS	STAT-O-SEAL (WFRC) (83259)	2	SR	
-31	MS29513-10	PACKING	4	ME	
-32	AN4-5A	BOLT	1	ME	
	---*---				
-33	209-48222	. FITTING ASSEMBLY, Inflight refueling line forward fuselage cell	1	ME	
-34	FT-983	. BELLOWS ASSEMBLY (FLTU) (83144)	1	ME	
-35	AN3H4A	. BOLT	6	ME	
-36	2W18-10M	. WASHER, Flat (NA) (89372)	6	ME	
-37	MS29513-240	PACKING	1	ME	
-38	4369-300-S	COUPLING (MAR) (98625)	1	ME	
-39	209-48151	FITTING, Inflight refueling inboard wing LH	1	ME	
	ATTACHING PARTS				
-40	AN4-11A	BOLT	8	ME	
-41	2W18-416M	WASHER, Flat (NA) (89372)	8	ME	
-42	600-015-1/4	STAT-O-SEAL(WRFC)(83259)	8	ME	
	---*---				
-43	MS29513-244	PACKING	1	ME	
-44	MS29513-336	PACKING	1	ME	
-45	209-48152	NUT, 1-1/2 inch fuel line coupling male	1	ME	
-46	209-48124	SLEEVE, Fuel line connector 1-1/2 inch OD	2	ME	
-47	4178-24	RING (Rubber-Teck Sales and Service Co) (98159)	1	ME	
-48	209-48153	NUT, 1-1/2 inch fuel line coupling female	1	ME	
-49	209-48154	NUT, Two inch fuel line coupling male	1	ME	
-50	209-48123	SLEEVE, Fuel line connector two inch OD	2	ME	
-51	4178-32	RING (Rubber-Teck Sales and Service Co) (98159)	1	ME	
-52	209-48155	NUT, Two inch fuel line coupling female	1	ME	
-53	209-48290	BRACKET, Remote fuel level control float	1	ME	
	ATTACHING PARTS				
-54	AN3-4A	BOLT	6	ME	
-55	2W18-10M	WASHER, Flat (NA) (89372)	12	ME	
-56	AN365-1032	NUT	6	ME	
	---*---				
-57	AN4-7A	BOLT	8	ME	
-58	2W18-416M	WASHER, Flat (NA) (89372)	8	ME	
-59	3-254-91	VALVE, Float level (SZT) (82267)	1	ME	

REFUELING SYSTEM - APPLICABLE TO AIRCRAFT CODED (ME)

FIGURE & INDEX NO.	PART NUMBER	1 2 3 4 5 6 7 NOMENCLATURE	UNITS PER ASSY.	USABLE ON CODE	S/C NO.
103-60	MS29513-253	PACKING	2	ME	
-61	AN815-6D	UNION	2	ME	
-62	MS29512-6	PACKING	2	ME	
-63	209-483235	HANGER, Forward fuel cell float switch assembly of	1	ME	
-64	209-483231-11	BRACKET, Forward fuel cell float switch assembly of	1	ME	
-65	209-483231-1	BRACKET, Forward fuel cell float switch assembly of	1	ME	
-66	AN3-3A	BOLT	4	ME	
-67	2W18-10M	WASHER, Flat (NA) (89372)	4	ME	
	209-48333	BELLOWS ASSEMBLY, Single point refueling forward fuselage cell	1	ME	
	ATTACHING PARTS				
-68	AN4-11A	BOLT	2	ME	
-69	2W18-416M	WASHER, Flat (NA) (89372)	6	ME	
-70	MS29513-10	PACKING	2	ME	
-71	AN4-5A	BOLT	4	ME	
	---*---				
-72	209-48332	. FITTING ASSEMBLY, Single point refueling line forward fuel cell	1	ME	
	1191-3CNx-.285	. . INSERT, Heli-coil (AF) (91767)	6	ME	
	91050	. BELLOWS ASSEMBLY (ARW) (91499) (superseded by 91142 (ARW) (91499) for future procurement)	1	ME	
-73	91142	. BELLOWS ASSEMBLY (ARW) (91499) (supersedes 91050 (ARW) (91499) for future procurement)	1	ME	
-74	AN3H3A	. BOLT	6	ME	
-75	2W18-10M	. WASHER, Flat (NA) (89372)	6	ME	
-76	MS29513-237	PACKING	1	ME	
-77	4369-250-S	COUPLING (MAR) (98625)	1	ME	
	209-48117-1	FITTING ASSEMBLY, Single point refueling inboard wing LH	1	ME	
	ATTACHING PARTS				
-78	AN4-11A	BOLT	8	ME	
-79	2W18-416M	WASHER, Flat (NA) (89372)	8	ME	
-80	600-015-1/4	STAT-O-SEAL (WFRC) (83259)	8	ME	
	---*---				
-81	209-48159-1	. FITTING ASSEMBLY, Single point refueling inboard wing LH	1	ME	
	1185-06CNx-.281	. . INSERT, Heli-coil (AF) (91767)	2	ME	
-82	MS29521-24	. VALVE ELEMENT	1	ME	
-83	AN515-6-6	. SCREW	2	ME	
-84	AN936A6	. WASHER, Lock	2	ME	
-85	2W18-6L	. WASHER, Flat (NA) (89372)	2	ME	
-86	MS29513-243	PACKING	1	ME	
-87	MS29513-230	PACKING	1	ME	
	209-483158	FITTING ASSEMBLY, Inflight refueling probe	1	ME	
-88	209-483157	. FITTING ASSEMBLY, Inflight refueling probe	1	ME	
-89	MS29513-234	. PACKING	1	ME	
-90	15-7300-3	. VALVE ASSEMBLY (SAHR) (96736)	1	ME	
-91	NAS50-325	. RING	1	ME	
-92	MS29513-238	PACKING	1	ME	
-93	194-48843	RETAINER, Extended wet leading edge wing probe fitting	1	ME	
-94	3601-32-9D	WASHER (WIG) (79326)	2	ME	
-95	MS29513-329	PACKING	1	ME	
-96	194-48851	CAP, Extended wet leading edge inflight refueling	1	ME	
-97	MS29513-222	PACKING	1	ME	
-98	7-70205	VALVE, Shutoff (KOE) (75361)	1	ME	
	ATTACHING PARTS				
-99	2W18-416M	WASHER, Flat (NA) (89372)	7	ME	
-100	AN4-10A	BOLT	7	ME	
	---*---				
-101	MS29513-15	PACKING	1	ME	
-102	MS29513-13	PACKING	1	ME	
-103	MS29513-243	PACKING	1	ME	
-104	209-483234	FITTING ASSEMBLY, Fuel canted station 180.906	1	ME	
	ATTACHING PARTS				
-105	2W18-416	WASHER, Flat (NA) (89372)	7	ME	
-106	AN4-10A	BOLT	7	ME	
	---*---				
	1185-06CNx-.207	. INSERT, Heli-coil (AF) (91767)	2	ME	
-107	6-2001	. VALVE (SAHR) (96736) (interchangeable with 37181-1 (KOE) (75361))	1	ME	
	ATTACHING PARTS				
-108	2W1AL12-8-32	. WASHER, Plain (NA) (89372)	2	ME	
-109	AN500A6-5	. SCREW	2	ME	
	---*---				
	3605-20D	COUPLING, Flexible (WIG) (79326)	1	ME	
-110	3605-20D-3	. NUT, Coupling (WIG) (79326)	1	ME	
-111	3601-20D-9	. WASHER, Coupling (WIG) (79326)	2	ME	
-112	3605-20D-24	. RETAINER HALF, Coupling (WIG) (79326)	2	ME	
-113	3601-20D-1	. BODY, Coupling (WIG) (79326)	1	ME	
-114	MS29513-218	PACKING	2	ME	
	209-48333	BELLOWS ASSEMBLY, Single point refueling forward fuselage cell	1	ME	
	ATTACHING PARTS				
-115	AN4-11A	BOLT	2	ME	
-116	2W18-416M	WASHER, Flat (NA) (89372)	6	ME	
-117	MS29513-10	PACKING	2	ME	
-118	AN4-5A	BOLT	4	ME	
	---*---				
-119	209-48332	. FITTING ASSEMBLY, Single point refueling line forward fuel cell	1	ME	

REFUELING SYSTEM - APPLICABLE TO AIRCRAFT CODED (ME)

FIGURE & INDEX NO.	PART NUMBER	1 2 3 4 5 6 7 NOMENCLATURE	UNITS PER ASSY.	USABLE ON CODE	S/C NO.
103-	1191-3CNx-.285	. . INSERT, Heli-coil (AF) (91767)	6	ME	
	91050	. BELLOWS ASSEMBLY (ARW) (91499) (superseded by 91142 (ARW) (91499) for future procurement)	1	ME	
-120	91142	. BELLOWS ASSEMBLY (ARW) (91499) (supersedes 91050 (ARW) (91499) for future procurement)	1	ME	
-121	AN3H3A	. BOLT	6	ME	
-122	2W18-10M	. WASHER, Flat (NA) (89372)	6	ME	
-123	MS29513-237	PACKING	1	ME	
-124	4369-250-5	COUPLING (MAR) (98625)	1	ME	
	209-48117-2	FITTING ASSEMBLY, Single point refueling inboard wing RH	1	ME	
	ATTACHING PARTS				
-125	AN4-11A	BOLT	8	ME	
-126	2W18-416M	WASHER, Flat (NA) (89372)	8	ME	
-127	600-015-1/4	STAT-O-SEAL (WFRC) (83259)	8	ME	
	---*---				
-128	209-48159-2	. FITTING ASSEMBLY, Single point refueling inboard wing RH	1	ME	
	1185-06CNx-.281	. . INSERT, Heli-coil (AF) (91767)	2	ME	
-129	MS29521-24	. VALVE ELEMENT	1	ME	
-130	AN515-6-6	. SCREW	2	ME	
-131	AN936A6	. WASHER	2	ME	
-132	2W18-6L	. WASHER, Flat (NA) (89372)	2	ME	
-133	MS29513-243	PACKING	1	ME	
-134	MS29513-230	PACKING	1	ME	
-135	7005D24	NIPPLE ASSEMBLY, Fuel 1-1/2 inch self seal (WIG) (79326)	1	ME	
	7005-24-2	. NIPPLE (WIG) (79326)	1	ME	
	A7000-24-810	. VALVE (WIG) (79326)	1	ME	
	6000-24-11	. VALVE SPRING (WIG) (79326)	1	ME	
	A13-141	. "O" RING (WIG) (79326)	1	ME	
	7000D24-15	. END (WIG) (79326)	1	ME	
-136	MS29512-24	PACKING	1	ME	
-137	209-48417	SEAL, Fuel aft fuselage cell refueling inlet	1	ME	
	ATTACHING PARTS				
-138	AN520-10R8	SCREW	6	ME	
-139	2W18-10M	WASHER, Flat (NA) (89372)	6	ME	
	---*---				
	209-48431	FITTING ASSEMBLY, Fuel aft fuselage cell refueling unit complete	1	ME	
-140	209-48430	. FITTING ASSEMBLY, Fuel aft fuselage cell refueling inlet	1	ME	
	RL18SB-6	. . RING (ROSN) (83324)	2	ME	
	RD103SB-51	. . INSERT (ROSN) (83324)	2	ME	
-141	1111-518113	. VALVE ASSEMBLY (PAET) (92003)	1	ME	
-142	AN515-6R4	. SCREW	2	ME	
-143	AN4-5A	BOLT	6	ME	
-144	2W18-416M	WASHER, Flat (NA) (89372)	6	ME	
-145	MS29513-231	PACKING	1	ME	
-146	AN4-5A	BOLT	8	ME	
-147	2W18-416M	WASHER, Flat (NA) (89372)	8	ME	
-148	MS29513-250	PACKING	1	ME	
-149	209-48255	LINE ASSEMBLY, Weld RH drop tank forward fuselage fuel cell	1	ME	
	ATTACHING PARTS				
-150	AN4-6A	BOLT	4	ME	
-151	AN363C428	NUT	4	ME	
-152	2W18-416	WASHER, Flat (NA) (89372)	8	ME	
	---*---				
-153	MS29513-125	PACKING	1	ME	
-154	209-483229	TRANSFER TEE, Refueling forward cell	1	ME	
	ATTACHING PARTS				
-155	AN4-6A	BOLT	4	ME	
-156	2W18-416M	WASHER, Flat (NA) (89372)	8	ME	
-157	AN363C428	NUT	4	ME	
	---*---				
-158	MS29513-139	PACKING	1	ME	
-159	32P101-1	VALVE ASSEMBLY, Two-way variable (AAPR) (82829)	1	ME	
	ATTACHING PARTS				
-160	AN4-6A	BOLT	4	ME	
-161	2W18-416M	WASHER, Flat (NA) (89372)	8	ME	
-162	AN363C428	NUT	4	ME	
	---*---				
-163	MS29513-137	PACKING	1	ME	
-164	C11-21200	COUPLING (MAR) (98625) (superseded by CF14-200 (MAR) (98625) for future procurement)	1	ME	
	CF14-200	COUPLING (MAR) (98625) (supersedes C11-21200 (MAR) (98625) for future procurement)	1	ME	
-165	209-48055	ADAPTER, Buddy tank cross over line	1	ME	
-166	209-540137	CLIP, Electric clamp mounting	1	ME	
	ATTACHING PARTS				
-167	AN4-22A	BOLT	1	ME	
-168	AN4-21A	BOLT	3	ME	
-169	2W18-416	WASHER, Flat (NA) (89372)	1	ME	
-170	2W18-416M	WASHER, Flat (NA) (89372)	4	ME	
-171	MS29513-226	PACKING	2	ME	
-172	08-17180F	VALVE, Gate (SAI) (78493)	1	ME	
-173	MS29513-227	PACKING	2	ME	

REFUELING SYSTEM - APPLICABLE TO AIRCRAFT CODED (ME)

FIGURE & INDEX NO.	PART NUMBER	1 2 3 4 5 6 7 NOMENCLATURE	UNITS PER ASSY.	USABLE ON CODE	S/C NO.
103-174	209-483243	FITTING, Single point refueling to wing and buddy tank assembly of	1	ME	
-175	MS29513-222	PACKING	2	ME	
	3655-32D	COUPLING, Flexible half (WIG) (79326)	1	ME	
-176	3605-32D-3	. NUT, Coupling (WIG) (79326)	1	ME	
-177	3601-32D-9	. WASHER, Coupling (WIG) (79326)	2	ME	
-178	MS29513-329	PACKING	1	ME	
-179	209-48436	SUPPORT, Forward fuel cell buddy tank transfer 1-1/4 inch gate valve assembly of	1	ME	
	ATTACHING PARTS				
-180	AN74A15	BOLT	2	ME	
-181	AN74A16	BOLT	1	ME	
-182	600-015-1/4	STAT-O-SEAL (WFRC) (83259)	3	ME	
-183	2W18-416M	WASHER, Flat (NA) (89372)	3	ME	
-184	AN3-4A	BOLT	3	ME	
-185	2W18-10M	WASHER, Flat (NA) (89372)	3	ME	
	---•---				
-186	MS28741-6-0500	HOSE ASSEMBLY (fuel level control)	2	ME	
-187	AN837-6D	ELBOW	2	ME	
-188	AN924-6D	NUT	2	ME	
-189	MS29512-6	PACKING	2	ME	

FEED SYSTEM - APPLICABLE TO AIRCRAFT CODED (FR)

FIGURE & INDEX NO.	PART NUMBER	1 2 3 4 5 6 7 NOMENCLATURE	UNITS PER ASSY.	USABLE ON CODE	S/C NO.
105-1	TB116900	*1 PUMP ASSEMBLY, Fuel boost (TP) (59875) (interchangeable with RG-11510-C (RO) (51663))	2	FR	
-2	RG-11510-C	*1 PUMP ASSEMBLY, Fuel boost (RO) (51663) (interchangeable with TB116900 (TP) (59875))	2	FR	
		ATTACHING PARTS			
-3	AN4-5A	BOLT	16	FR	
-4	2W18-416M	WASHER, Flat (NA) (89372)	16	FR	
		---*---			
-5	MS29513-252	PACKING	2	FR	
-6	K83501-1	VALVE (KOE) (75361) (for breakdown see Technical Manual AN 03-1-84)	2	FR	
-7	MS29512-4	GASKET	2	FR	
-8	209-483218	DRAIN, Forward fuselage fuel pump seal (supersedes 209-48328 for future procurement)	2	FR	
-9	MS29512-4	GASKET	2	FR	
-10	209-48292	ELBOW, Fuel boost pump outlet (on forward pump only)	1	FR	
-11	MS29513-12	PACKING	2	FR	
-12	2W17-616M	WASHER, Corrosion-resistant steel (NA) (89372)	2	FR	
-13	AN76A51	BOLT (on forward pump only)	1	FR	
	AN76A41	BOLT (on aft pump only)	1	FR	
-14	209-483198	LINE ASSEMBLY, Forward booster pump fuel feed and buddy tanker	1	FR	
-15	MS29513-218	PACKING	2	FR	
-16	209-483193	ADAPTER, Fuel transfer to buddy tanker internal	1	FR	
-17	MS29513-219	PACKING	2	FR	
-18	08-17531D	VALVE (SAI) (78493)	1	FR	
-19	209-48436	SUPPORT ASSEMBLY, Forward fuel cell buddy tanker transfer 1-1/4 gate valve-	1	FR	
-20	AN4-20A	BOLT	4	FR	
-21	2W18-416M	WASHER, Flat (NA) (89372)	4	FR	
-22	209-483199	LINE ASSEMBLY, Forward fuel cell pump feed to buddy tanker	1	FR	
-23	MS29513-218	PACKING	1	FR	
-24	209-48223	MANIFOLD ASSEMBLY, Fuel feed	1	FR	
		ATTACHING PARTS			
-25	AN364-428C	NUT	4	FR	
-26	2W18-416M	WASHER, Flat (NA)	4	FR	
-27	COMM	SETSCREW, Flat point Allen head 1/4-28 NF-3 x 1-1/4	2	FR	
		---*---			
-28	209-48224	. MANIFOLD ASSEMBLY, Fuel feed	1	FR	
	RD206SB-6.5L	. . INSERT (ROSN) (83324)	12	FR	
	RL28SB-8	. . RING (ROSN) (83324)	12	FR	
-29	209-48225	. ADAPTER, Forward booster pump to fuel feed manifold	1	FR	
		ATTACHING PARTS			
-30	AN4H5A	. BOLT	4	FR	
-31	2W18-416	. WASHER, Flat (NA) (89372)	4	FR	
		---*---			
	1165-06CNx-.250	. . INSERT, Heli-coil (AF) (91767)	2	FR	
-32	MS29513-228	. PACKING	1	FR	
-33	25-1000	. VALVE (SAHR) (96736)	1	FR	
-34	AN500A6-5	. SCREW	2	FR	
-35	2W1AL12-8-32	. WASHER, Plain (NA) (89372)	2	FR	
-36	209-48325	. ADAPTER ASSEMBLY, Suction fuel feed manifold	1	FR	
		ATTACHING PARTS			
-37	AN4H5A	. BOLT	4	FR	
-38	2W18-416	. WASHER, Flat (NA) (89372)	4	FR	
		---*---			
	1185-06CNx-.207	. . INSERT, Heli-coil (AF) (91767)	2	FR	
-39	MS29513-229	. PACKING	1	FR	
-40	6-2404	. VALVE (SAHR) (96736)	1	FR	
-41	AN500A6-5	. SCREW	2	FR	
-42	2W1AL12-8-32	. WASHER, Plain (NA) (89372)	2	FR	
-43	209-48285	. ADAPTER ASSEMBLY, Fuel feed manifold aft boost pump	1	FR	
		ATTACHING PARTS			
-44	AN4H5A	. BOLT	4	FR	
-45	2W18-416	. WASHER, Flat (NA) (89372)	4	FR	
		---*---			
	1185-6CNx-.563	. . INSERT, Heli-coil (AF) (89372)	1	FR	
	1185-06CNx-.207	. . INSERT, Heli-coil (AF) (89372)	2	FR	
-46	MS29513-228	. PACKING	1	FR	
-47	25-1000	. VALVE (SAHR) (96736)	1	FR	
-48	AN500A6-5	. SCREW	2	FR	
-49	2W1AL12-8-32	. WASHER, Plain (NA) (89372)	2	FR	
-50	MS29513-218	PACKING (at manifold end)	1	FR	
-51	209-48226	LINE ASSEMBLY, Fuel feed manifold to fitting at fuselage station 179.9	1	FR	
-52	MS29513-226	PACKING	1	FR	
-53	209-48233	FITTING, Fuel feed at station 180.906	1	FR	
		ATTACHING PARTS			
-54	AN4-6A	BOLT	4	FR	
-55	2W18-416M	WASHER, Flat (NA) (89372)	4	FR	
-56	209-48801-129	TUBE, Forward fuselage fuel cell to fuel filter (see figure 111)	1		
		---*---			
-57	209-48234	BRACKET, Fuel feed fitting at station 179.9	1	FR	
		ATTACHING PARTS			
-58	AN4-4A	BOLT	2	FR	
-59	AN4H4A	BOLT	1	FR	
-60	2W18-416M	WASHER, Flat (NA) (89372)	3	FR	
		---*---			

FEED SYSTEM - APPLICABLE TO AIRCRAFT CODED (FR)

FIGURE & INDEX NO.	PART NUMBER	1 2 3 4 5 6 7 NOMENCLATURE	UNITS PER ASSY.	USABLE ON CODE	S/C NO.
105-61	209-48326	FITTING, Fuel filter strut support station 180.906	1	FR	
	ATTACHING PARTS				
-62	AN4-5A	BOLT	2	FR	
-63	2W18-416M	WASHER, Flat (NA)	2	FR	
	---*---				
-64	209-48077	FILTER ASSEMBLY, Fuel system (see figure 111 for breakdown)	1	FR	
-65	209-48307	HOSE ASSEMBLY, Fuel filter to engine (see Power Plant)	1	FR	
-66	1111-565455	VALVE, Check (PAET) (92003) (see figure 100 for continuation) (supersedes 209-482116 for future procurement)	1	FR	
-67	022664-021-02	PUMP ASSEMBLY, Fuel (PE) (77200) (GFP) (interchangeable with TG77200-4 (TP) (59875) (GFP))	1		
-68	TG77200-4	PUMP ASSEMBLY, Fuel (PE) (77200) (GFP) (interchangeable with 022664-021-02 (PE) (77200) (GFP))	1		
	ATTACHING PARTS				
	AN122584	WASHER	4		
	6087D4	NUT, Self locking high temperature (WAC) (66640)	4		
	AN4044-1	GASKET	1		
	---*---				

NOTE: *1 Supersedes 122637-221-02 (PE) (77200) and 122637-220-04 (PE) (77200) together with 12-557 (PE) (77200) and MS 29513-28 for future procurement

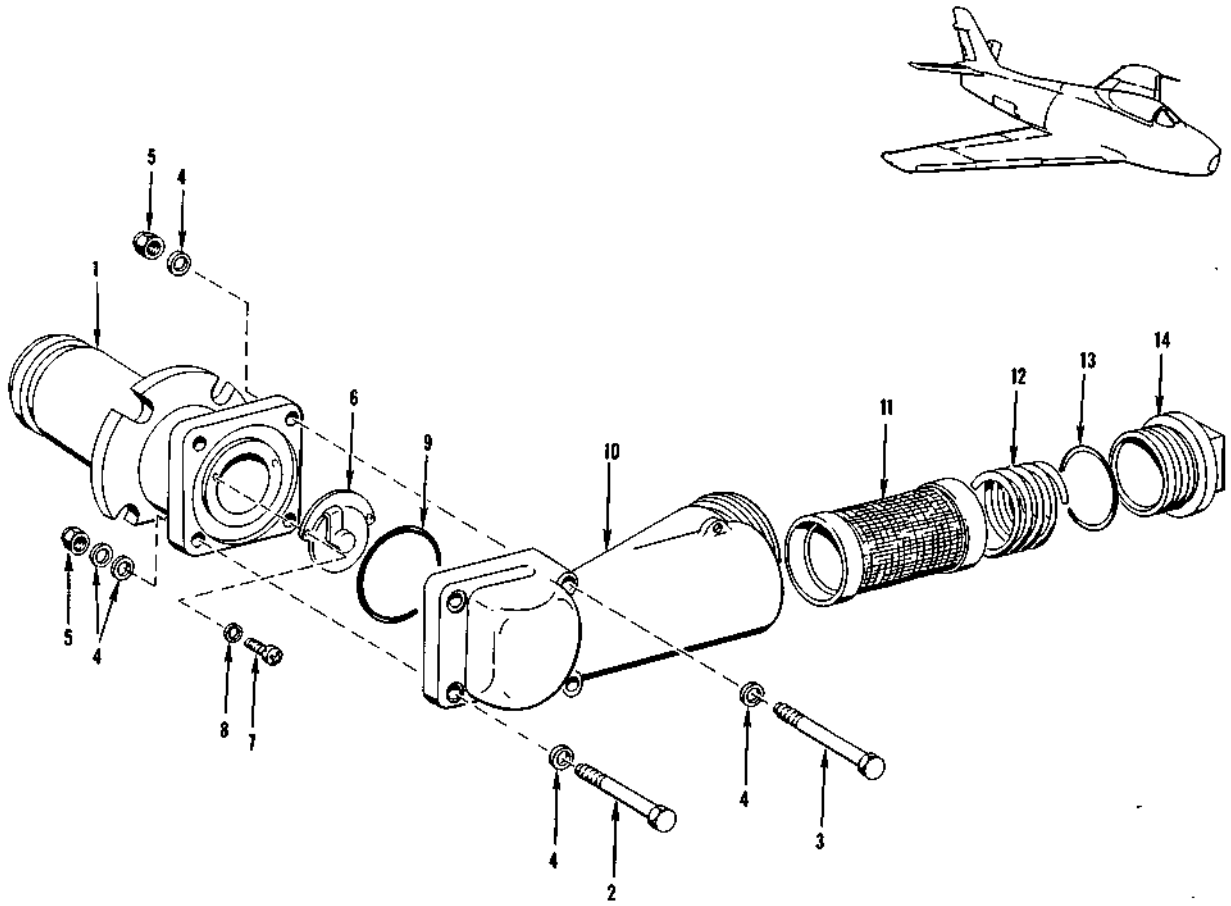

FIGURE 106 - VALVE ASSEMBLY, WING FUEL TRANSFER CHECK RH

FIGURE & INDEX NO.	PART NUMBER	1 2 3 4 5 6 7 NOMENCLATURE	UNITS PER ASSY.	USABLE ON CODE
106	209-481119	VALVE ASSEMBLY, Wing fuel transfer check RH	1	FR
-1	209-48169-12	. ADAPTER, Fuel transfer outlet inboard wing	1	FR
	1185-06CNx-. 207	. . INSERT, Heli-coil (AF)	2	FR
-2	AN4-10A	. BOLT	2	FR
-3	AN4-17A	. BOLT	2	FR
-4	2W18-416M	. WASHER, Flat (NA)	9	FR
-5	AN364-428	. NUT	4	FR
-6	1111-548382	. VALVE (PAET) (interchangeable with 6-2004 (SAHR))	1	FR
-7	AN500A6-5	. SCREW	2	FR
-8	2W18-6L	. WASHER, Flat (NA)	2	FR
-9	MS29513-144	. PACKING	1	FR
-10	209-48171-2	. HOUSING, Strainer valve transfer outlet wing	1	FR
-11	209-48176	. STRAINER ASSEMBLY, Wing fuel transfer	1	FR
-12	209-48177	. SPRING, Compression	1	FR
-13	MS29512-20	. PACKING	1	FR
-14	209-48175	. PLUG, Wing fuel transfer screen	1	FR

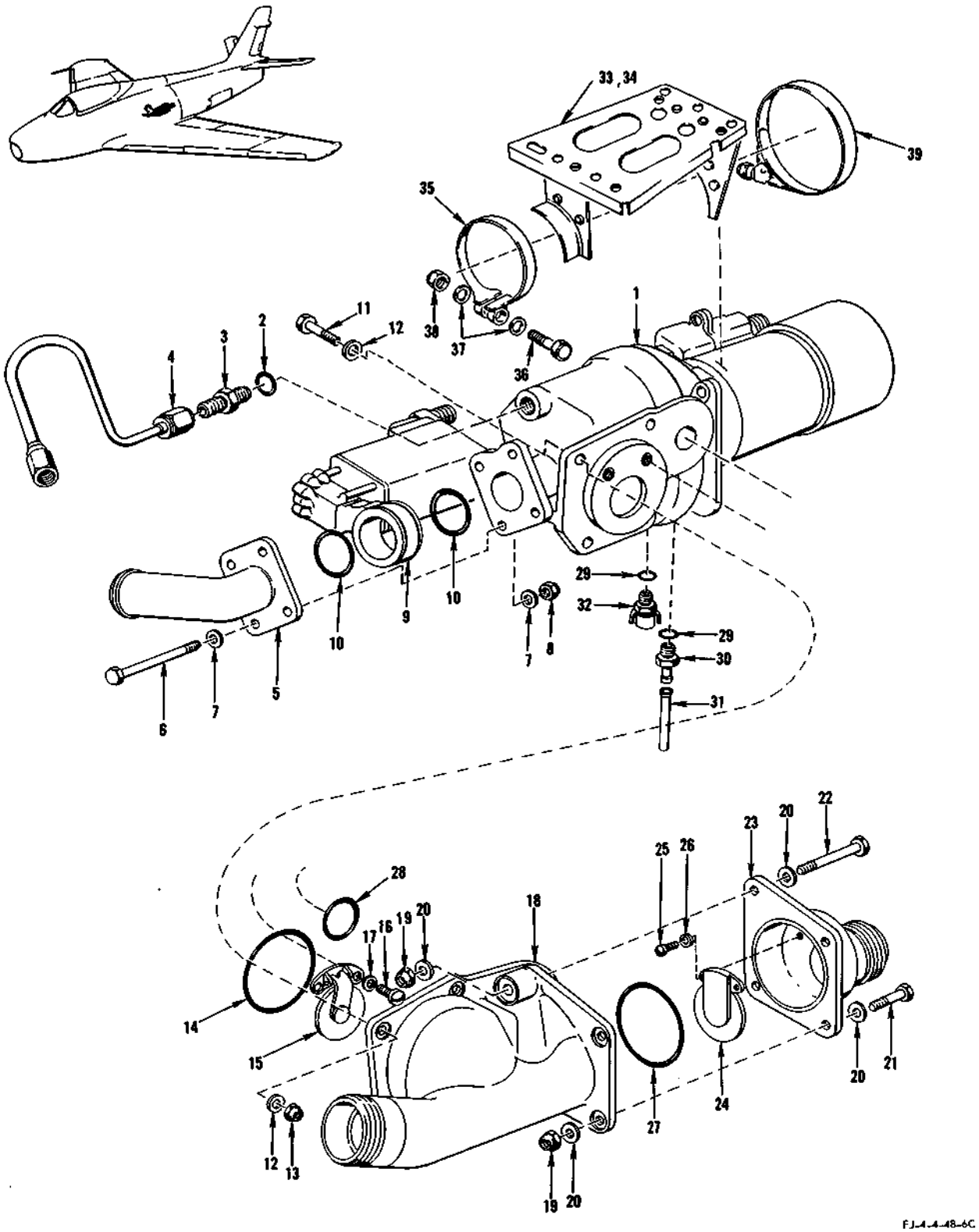

FIGURE 107 - WING FUEL TRANSFER PUMP ASSEMBLY AND ATTACHING PARTS - APPLICABLE TO AIRCRAFT CODED (ET)

WING FUEL TRANSFER PUMP ASSEMBLY AND ATTACHING PARTS - APPLICABLE TO AIRCRAFT CODED (ET)

FIGURE & INDEX NO.	PART NUMBER	1 2 3 4 5 6 7 NOMENCLATURE	UNITS PER ASSY.	USABLE ON CODE	S/C NO.
107	209-48129	*1 PUMP ASSEMBLY, Wing fuel transfer (see figure 108 for breakdown of 209-48129-11)	1	ET	
-1	122913-010-02	. BOOSTER PUMP (PE) (77200) (for breakdown see Technical Manual NA 03-30CB-544)	1	KE	
	122913-010-01	. BOOSTER PUMP (PE) (77200) (for breakdown see Technical Manual NA 03-30CB-544)	1	P	
-2	MS29512-4	. GASKET	1	ET	
-3	AN815-4D	. UNION	1	ET	
-4	209-48801-243	. TUBE ASSEMBLY, Transfer pump to vent line	1	ET	
-5	209-48174	. ADAPTER ASSEMBLY, Wing fuel shutoff valve	1	ET	466
	209-482120	. ADAPTER ASSEMBLY, Wing fuel shutoff valve	1	ET	466
-6	AN4-23A	. BOLT	4	ET	466
	AN4-7A	. BOLT	4	ET	466
-7	2W18-416	. WASHER, Flat (NA) (89372)	8	ET	
-8	AN365-428	. NUT	4	ET	
-9	30-037	. VALVE (HOA) (81982) (for breakdown see Technical Manual NA 03-10ABB-632)	1	ET	466
-10	MS29513-218	. PACKING	2	ET	466
	MS29513-128	. PACKING	1	ET	466
-11	AN4-7A	. BOLT	4	ET	
-12	2W18-416	. WASHER, Flat (NA) (89372)	8	ET	
-13	AN365-428	. NUT	4	ET	
-14	MS29513-229	. PACKING	1	ET	
-15	1111-548180	. VALVE (PAET) (92003)	1	ET	
-16	AN500A6-5	. SCREW	2	ET	
-17	2W1AL12-8-32	. WASHER, Plain (NA) (89372)	2	ET	
-18	209-48131	. MANIFOLD FITTING, Wing and rear fuselage fuel transfer	1	ET	
-19	AN365-428	. NUT	4	ET	
-20	2W18-416	. WASHER, Flat (NA) (89372)	8	ET	
-21	AN4-7A	. BOLT	3	ET	
-22	AN4-15A	. BOLT	1	ET	
-23	209-48158	. HOUSING ASSEMBLY, Fuel line transfer check valve	1	ET	
-24	37181-1	. VALVE (KOE) (75361) (interchangeable with 6-2001 (SAHR) (96736))	1	ET	
-25	AN500A6-5	. SCREW	2	ET	
-26	2W1AL12-8-32	. WASHER, Plain (NA) (89372)	2	ET	
-27	MS29513-229	. PACKING	1	ET	
-28	MS29513-215	. PACKING	1	ET	
-29	MS29512-4	GASKET	2	ET	
-30	187-48370	NIPPLE, Fuel pump seal drain	1	ET	
-31	10C2B13-1-3/4	CONDUIT (NA) (89372)	1	ET	
-32	83501-1	VALVE (KOE) (for breakdown see Technical Manual AN 03-184)	1	ET	
-33	209-48184	SUPPORT ASSEMBLY, Wing transfer fuel pump (superseded by 209-48184-41 for future procurement)	1	BR	
-34	209-48184-41	SUPPORT ASSEMBLY, Wing transfer fuel pump (superseded by 209-48184-31 for future procurement)	1	BS	
-35	209-48195	CLAMP ASSEMBLY, Wing fuel pump support forward	1	ET	
		ATTACHING PARTS			
-36	AN4-12A	BOLT	1	ET	
-37	2W18-416	WASHER, Flat (NA) (89372)	2	ET	
-38	AN365-428	NUT	1	ET	
		---*---			
-39	945-375-300D	CLAMP, Wing fuel pump support aft (MAR) (98625)	1	ET	

NOTE: *1 209-48129 together with MS28741-20-0155, 209-48184-41 and/or 209-48184 is superseded by 209-48129-11 together with MS28741-20-0150, 209-48052, 209-48184-31, 209-48821-59 and 209-48821-67 for future procurement

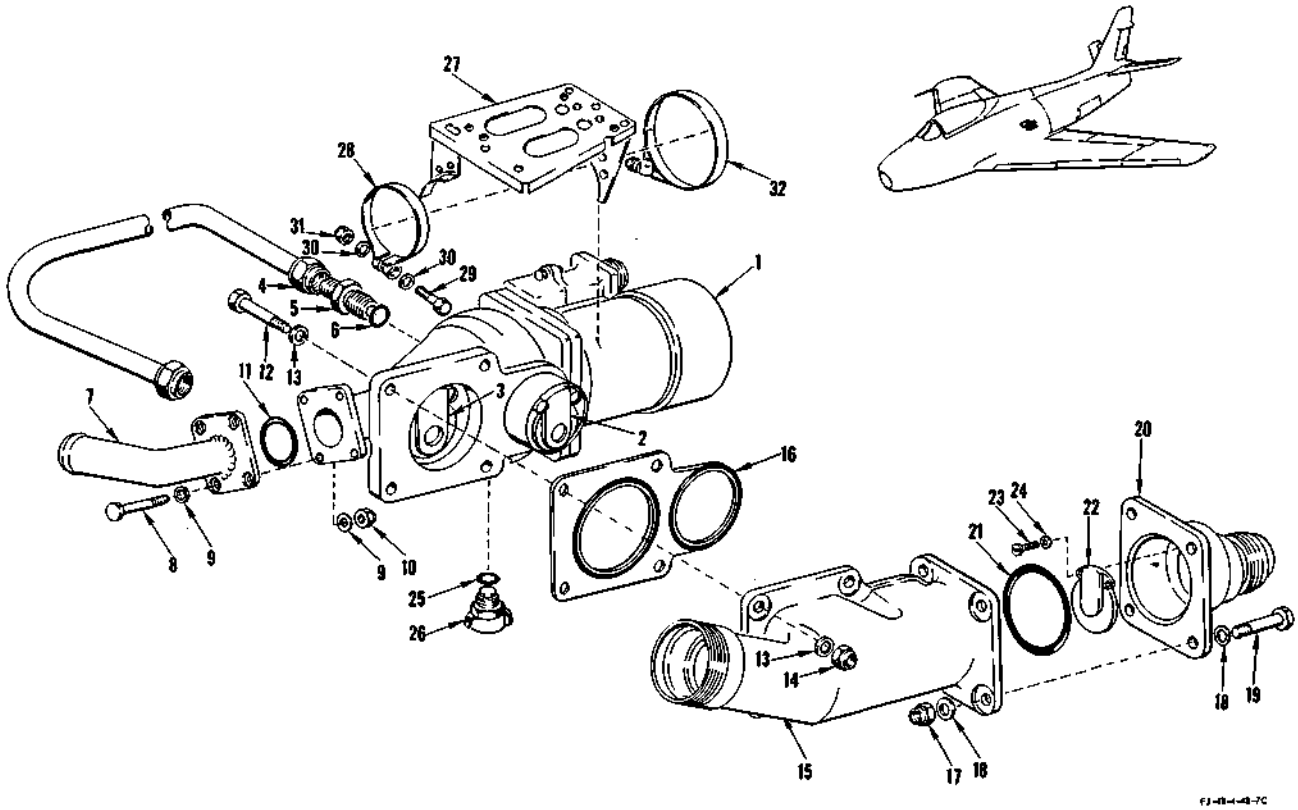

FIGURE 108 - WING FUEL TRANSFER PUMP ASSEMBLY AND ATTACHING PARTS - APPLICABLE TO AIRCRAFT CODED (FR)

FIGURE & INDEX NO.	PART NUMBER	1 2 3 4 5 6 7 NOMENCLATURE	UNITS PER ASSY.	USABLE ON CODE	S/C NO.
108	209-48129-11 *1	PUMP ASSEMBLY, Wing fuel transfer	1	FR	
-1	122901-010-01	. BOOSTER PUMP (PE)	1	FR	
-2	MS29521-16	. . VALVE ELEMENT (discharge)	1	FR	
-3	MS29521-20	. . VALVE ELEMENT (by-pass)	1	FR	
-4	209-48821-59	. LINE ASSEMBLY, Wing fuel transfer pump air vent inboard	1	FR	
-5	AN919-12D	. REDUCER	1	FR	
-6	MS29512-6	. PACKING	1	FR	
-7	209-482120	. ADAPTER ASSEMBLY, Wing fuel shutoff valve	1	FR	
-8	AN4-7A	. BOLT	4	FR	
-9	2W18-416	. WASHER, Flat (NA)	8	FR	
-10	AN365-428	. NUT	4	FR	
-11	MS29513-128	. PACKING	1	FR	
-12	AN4-7A	. BOLT	4	FR	
-13	2W18-416	. WASHER, Flat (NA)	8	FR	
-14	AN365-428	. NUT	4	FR	
-15	209-48397	. FITTING, Manifold center wing and rear fuselage fuel transfer	1	FR	
-16	062156	. GASKET (WFRC)	1	FR	
-17	AN365-428	. NUT	4	FR	
-18	2W18-416	. WASHER, Flat (NA)	8	FR	
-19	AN4-7A	. BOLT	4	FR	
-20	209-48158	. HOUSING ASSEMBLY, Fuel line transfer check valve	1	FR	
-21	MS29513-229	. PACKING	1	FR	
-22	37181-1	. VALVE (KOE) (interchangeable with 6-2001 (SAHR))	1	FR	
-23	AN500A6-5	. SCREW	2	FR	
-24	2W1AL12-8-32	. WASHER, Plain (NA)	2	FR	
-25	MS29512-4	PACKING	1	FR	
-26	83 501-1	VALVE (KOE) (for breakdown see Technical Manual AN 03-1-84)	1	FR	
-27	209-48184-31	SUPPORT ASSEMBLY, Wing fuel transfer fuel pump	1	FR	
	209-48052	DRAIN, Wing fuel pump assembly	1	FR	
-28	209-48056	CLAMP ASSEMBLY, Wing fuel pump support forward	1	FR	
	ATTACHING PARTS				
-29	AN4-12A	BOLT	1	FR	
-30	2W18-416	WASHER, Flat (NA)	2	FR	
-31	AN365-428	NUT	1	FR	
	---*---				
-32	945-375-300-D	CLAMP, Wing fuel pump support aft (MAR)	1	FR	

NOTE: *1 209-48129-11 together with MS28741-20-0150, 209-48052, 209-48184-31, 209-48821-59 and 209-48821-67 supersedes 209-48129, together with MS28741-20-0155, 209-48184-41 and/or 209-48184 for future procurement

SINGLE POINT REFUEL AND DEFUEL UNIT RECEPTACLE ASSEMBLY

FIGURE & INDEX NO.	PART NUMBER	1 2 3 4 5 6 7 NOMENCLATURE	UNITS PER ASSY.	USABLE ON CODE	S/C NO.
110	209-48206	RECEPTACLE ASSEMBLY, Single point refuel and defuel unit (superseded by 209-48206-21 for future procurement) (for breakdown see Technical Manual NAVAER 03-10ABN-503)	1	A	
	209-48206-21	RECEPTACLE ASSEMBLY, Single point refuel and defuel unit (supersedes 209-48206 for future procurement)	1	A	
	209-48206-11	RECEPTACLE ASSEMBLY, Single point refuel and defuel unit (superseded by 209-48206-31 for future procurement) (for breakdown see Technical Manual NAVAER 03-10ABN-503)	1	B	
	209-48206-31	RECEPTACLE ASSEMBLY, Single point refuel and defuel unit (supersedes 209-48206-11 for future procurement)	1	B	
-1	209-48207	. RECEPTACLE FITTING ASSEMBLY, Single point refuel and defuel (used on 209-48206-21 only)	1	A	
	209-48207-11	. RECEPTACLE FITTING ASSEMBLY, Single point refuel and defuel (used on 209-48206-31 only)	1	B	
	1185-06CNx-.207	. . INSERT, Heli-coil (AF) (91767)	2	A	
	1191-3CNx-.285	. . INSERT, Heli-coil (AF) (91767)	15		
-2	MS29521-32	. VALVE ELEMENT (used on 209-48206-21 only) (interchangeable with 37152 - (KOE) (75361) and 6-3200 (SAHR) (96736))	1	A	
	ATTACHING PARTS				
	AN500A6-5	. SCREW	2	A	
	2W18-6L	. WASHER, Flat (NA) (89372)	2	A	
	---*---				
-3	4-254-151	. VALVE, Fuel level control (SZT) (82267) (used on 209-48206-21 only)	1	A	
-4	4-254-91	. VALVE, Fuel level control (SZT) (82267) (used on 209-48206-31 only)	1	B	
-5	AN363-524	. NUT	5		
-6	2W18-516M	. WASHER, Flat (NA) (89372)	10		
-7	AN5-6A	. BOLT	5		
-8	209-48345	. FITTING, Single point refuel receptacle assembly	1		
-9	AN5-4	. BOLT	4		483
-10	2W18-516M	. WASHER, Flat (NA) (89372)	4		
-11	MS29513-228	. PACKING	1		
-12	MS29512-20	. GASKET	1		
-13	1111-548052	. CHECK VALVE (PAET) (92003)	1		
-14	MS29513-237	. PACKING	1		
-15	209-48342	. RECEPTACLE, Defuel single point refuel unit	1		
-16	AN502-10-8	. SCREW	6		
-17	2W18-10M	. WASHER, Flat (NA) (89372)	6		
-18	MS29513-148	. PACKING	1		
-19	MS29521-24	. VALVE ELEMENT (interchangeable with 37161 (KOE) (75361) and 6-2400 (SAHR) (96736))	1		
	ATTACHING PARTS				
	AN500A6-5	. SCREW	2		
	2W18-6L	. WASHER, Flat (NA) (89372)	2		
	---*---				
-20	MS29526-1	. CAP	1		
-21	MS29514-1	. FLANGE	1		
-22	AN3H6A	. BOLT	9		
-23	2W18-10M	. WASHER, Flat (NA) (89372)	9		
-24	MS29524-1	. GASKET	2		
-25	MS29519-1	. ADAPTER	1		

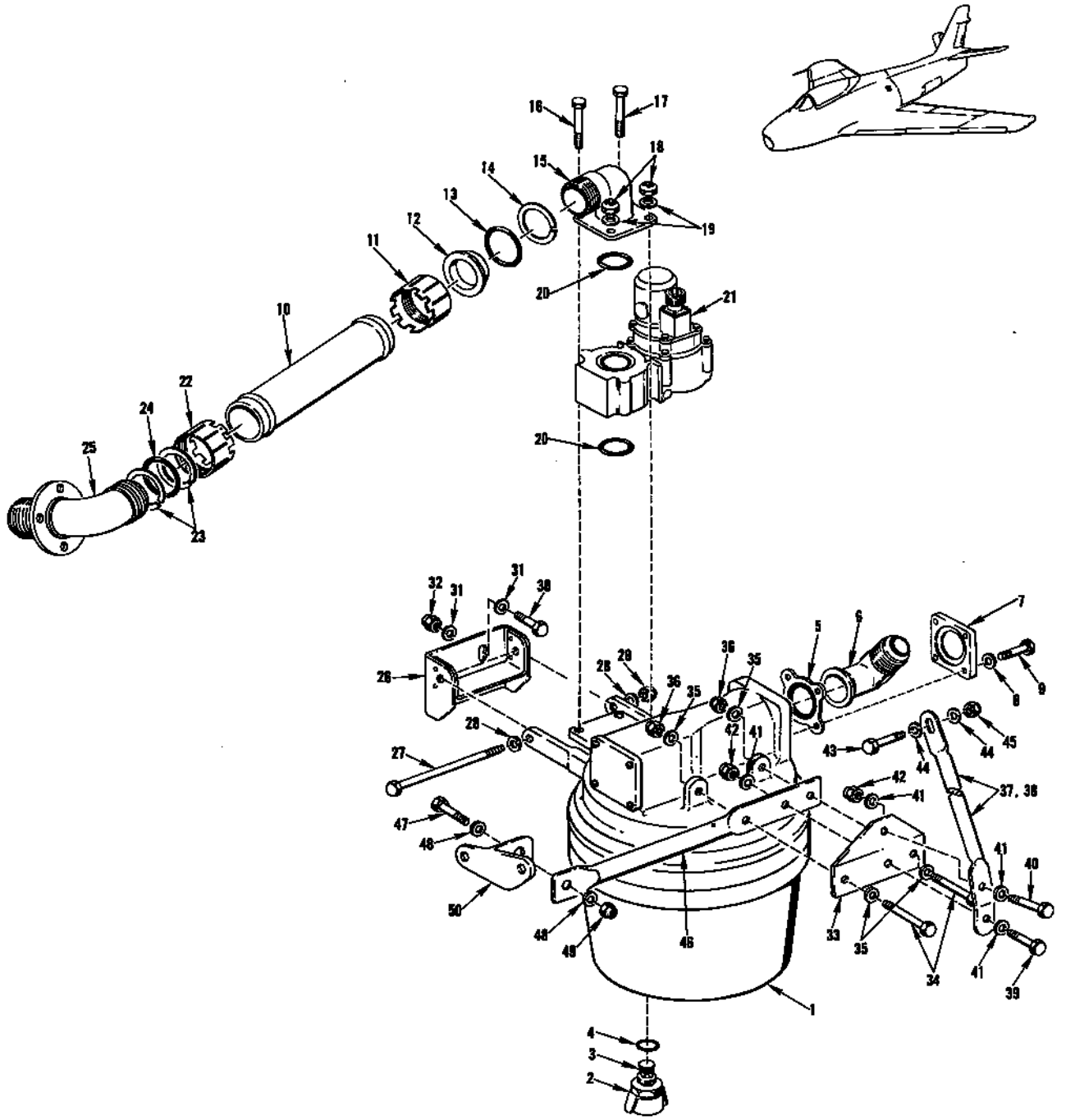

FIGURE 111 - FILTER ASSEMBLY AND ATTACHING PARTS

FILTER ASSEMBLY AND ATTACHING PARTS

FIGURE & INDEX NO.	PART NUMBER	1 2 3 4 5 6 7 NOMENCLATURE	UNITS PER ASSY.	USABLE ON CODE	S/C NO.
111	209-48077	FILTER ASSEMBLY, Fuel system	1		
-1	53038-2	. FUEL FILTER (PUP) (81321) (53038-1 will represent (NA) rework of 53038 (PUP) (81321) distinguished by two jam nuts (194-48080) on attaching bolt 39855 (PUP) (81321) which may have been used until 53038-2 was available) (see Technical Manual NA 03-10-632 for breakdown)	1		
	MS29513-263	. . PACKING (interchangeable with 39854 (PUP) (81321)	1		
-2	83501-1	. DRAIN VALVE (KOE) (75361) (for breakdown see Technical Manual AN 03-1-84)	1		
-3	83081	. . SEAL (KOE) (75361)	1		
-4	MS29513-12	. PACKING	1		
-5	460-615420	. GASK-O-SEAL (WFRC) (83259)	1		
-6	AN761D20	. ELBOW	1		
-7	AN756D20	. FLANGE	1		
-8	2W18-416M	. WASHER, Flat (NA) (89372)	4		
-9	AN4H6A	. BOLT	4		
-10	209-48801-129	. TUBE, Forward fuselage fuel cell to fuel filter	1		
-11	3651-20D-3	. NUT (WIG) (79326)	1		
-12	3651-20D-15	. GLAND (WIG) (79326)	1		
-13	MS29513-218	. PACKING	1		
-14	3651-20D-9	. WASHER (WIG) (79326)	1		
-15	209-48275	. ELBOW, Fuel filter shutoff valve	1		
-16	AN4H23A	. BOLT	1		
	AN365-428	. NUT	1		
-17	AN4-23A	. BOLT	1		
	2W13-416M	. WASHER, Flat (NA) (89372) (use under nut)	1		
	AN365-428	. NUT	1		
-18	AN365-428	. NUT	2		
-19	2W18-416M	. WASHER, Flat (NA) (89372)	2		
	MS29512-2	. PACKING (use under bolthead)	2		
	AN4-23A	. BOLT	2		
-20	MS29513-220	. PACKING (interchangeable with 1606-A23-25 (GCO) (73760))	2		
-21	AV16B-1307D	. GATE VALVE (GCO) (73760) (supersedes AV16B-1197D (GCO) (73760) for future procurement) (for breakdown see Technical Manual NA 03-10ABB-567)	1		
	3655-20D	COUPLING, Flexible half (WIG) (79326)	1		
-22	3605-20D-3	. NUT, Coupling (WIG) (79326)	1		
-23	3601-20D-9	. WASHER, Coupling (WIG) (79326)	2		
-24	MS29513-218	PACKING	1		
-25	209-48233	FITTING, Fuel feed line at station 180.906 (see figures 104 and 105 for continuation)	1		
-26	209-48246	BRACKET ASSEMBLY, Fuel filter fuselage support	1		
	ATTACHING PARTS				
-27	AN4-40A	BOLT	1		
-28	2W18-416	WASHER, Flat (NA) (89372)	2		
-29	AN365-428	NUT	1		
-30	AN4-5A	BOLT	2		
-31	2W18-416M	WASHER, Flat (NA) (89372)	4		
-32	AN365-428	NUT	2		
	---*---				
-33	209-48300	ANGLE, Fuel filter support adapter	1		
	ATTACHING PARTS				
-34	AN4-11A	BOLT	2		
-35	2W18-416	WASHER, Flat (NA) (89372)	4		
-36	AN365-428	NUT	2		
	---*---				
-37	209-48298-11	TUBE ASSEMBLY, Fuel filter vertical support	1	ET	
-38	209-483167	TUBE ASSEMBLY, Fuel filter vertical support	1	FR	
	ATTACHING PARTS				
-39	AN4-6A	BOLT	1		
-40	AN4-7A	BOLT	1		
-41	2W18-416	WASHER, Flat (NA) (89372)	4		
-42	AN365-428	NUT	2		
-43	AN4-7A	BOLT	1		
-44	2W18-416	WASHER, Flat (NA) (89372)	2		
-45	AN365-428	NUT	1		
	---*---				
-46	209-48299	TUBE ASSEMBLY, Fuel filter horizontal support	1		
	ATTACHING PARTS				
-47	AN4-7A	BOLT	1		
-48	2W18-416	WASHER, Flat (NA) (89372)	2		
-49	AN365-428	NUT	1		
	---*---				
-50	209-48326	FITTING, Fuel filter strut support station 180.906 (see figures 104 and 105 for continuation)	1		

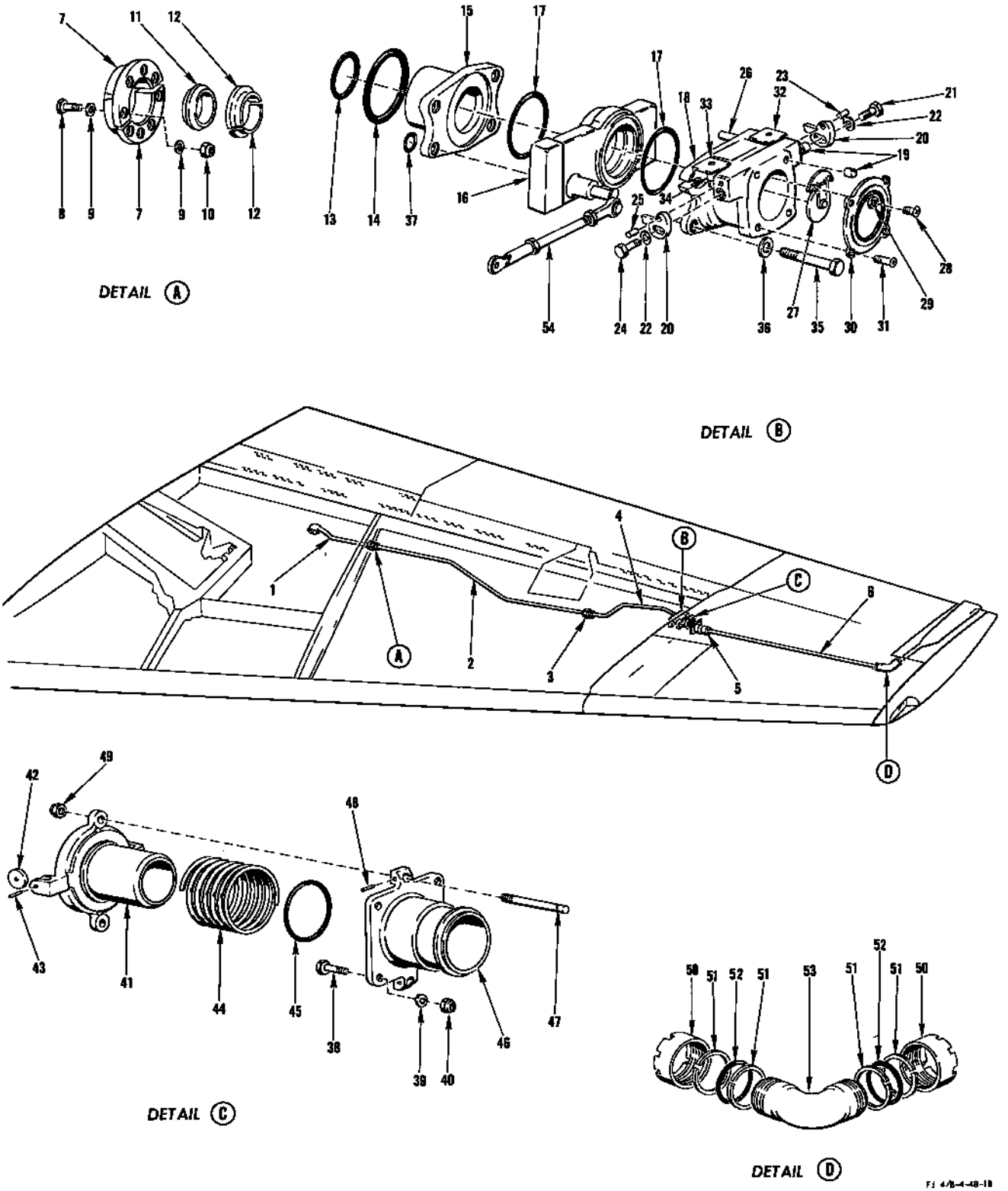

FIGURE 112 - DUMP SYSTEM

DUMP SYSTEM

FIGURE & INDEX NO.	PART NUMBER	1 2 3 4 5 6 7 NOMENCLATURE	UNITS PER ASSY.	USABLE ON CODE	S/C NO.
112-1	209-48187-1	TUBE ASSEMBLY, Inboard wing fuel dump pickup LH	1		
	209-48187-2	TUBE ASSEMBLY, Inboard wing fuel dump pickup RH	1		
-2	209-48186-1	LINE ASSEMBLY, Fuel dump tube inboard wing LH	1		
	209-48186-2	LINE ASSEMBLY, Fuel dump tube inboard wing RH	1		
-3	4176-32H	. NUT (Rubber-Teck Sales and Service Co) (98159)	1		
-4	209-48140-1	LINE ASSEMBLY, Fuel dump second section inboard wing LH	1		
	209-48140-2	LINE ASSEMBLY, Fuel dump second section inboard wing RH	1		
	4177-32H	. COUPLING (Rubber-Teck Sales and Service Co) (98159)	1		
	4178-32	RING (Rubber-Teck Sales and Service Co) (98159)	1		
-5	CF14-175	COUPLING (MAR) (98625) (supersedes C11-21175 (MAR) (98625) and/or C11-11175 (MAR) (98625) for future procurement)	1		
-6	209-48802-2	LINE ASSEMBLY, Wing fuel system outboard wing fuel dump	1		
-7	209-48110-3	RETAINER, Fuel dump inboard wing	2		
	ATTACHING PARTS				
-8	AN3-10A	BOLT	8		
-9	2W18-10M	WASHER, Flat (NA) (89372)	16		
-10	AN363-1032	NUT	8		
	---*---				
-11	4178-32	RING (Rubber-Teck Sales and Service Co) (98159)	1		
-12	209-48108	SLEEVE, Fuel dump inboard wing	2		
-13	MS29513-234	PACKING	1		
-14	MS29513-325	PACKING	1		
-15	209-48121	ADAPTER, Fuel dump line inboard wing	1		
-16	111865	VALVE ASSEMBLY, Manually operated gate shutoff (WTR) (79318) (used on LH wing) (for breakdown see Technical Manual NA 03-30EB-591)	1		
-17	MS29513-228	. PACKING	2		
	111875	VALVE ASSEMBLY, Manually operated gate shutoff (WTR) (79318) (used on RH wing) (for breakdown see Technical Manual NA 03-30EB-592)	1		
	MS29513-228	. PACKING	2		
	209-48119-1	FITTING ASSEMBLY, Fuel dump line inboard wingfold (LH wing)	1	ET	
	209-48119-2	FITTING ASSEMBLY, Fuel dump line inboard wingfold (RH wing)	1	ET	
	209-48119-11	FITTING ASSEMBLY, Fuel dump line inboard wingfold (LH wing)	1	FR	
	209-48119-12	FITTING ASSEMBLY, Fuel dump line inboard wingfold (RH wing)	1	FR	
-18	209-48120-1	. FITTING ASSEMBLY, Fuel dump line inboard wing LH	1		
	209-48120-2	. FITTING ASSEMBLY, Fuel dump line inboard wing RH	1		
	RD205SB-5.5L	. . INSERT (ROSN) (83324)	6		
	RL24SB-7	. . RING (ROSN) (83324)	6		
-19	AN565D6H3	. . SETSCREW	2		
-20	209-48149	. CAM, Fuel dump fitting assembly	2	ET	
	209-483176-1	. CAM, Fuel dump fitting assembly LH	2	FR	
	209-483176-2	. CAM, Fuel dump fitting assembly RH	2	FR	
-21	AN3-6A	. BOLT	1		
-22	2W1AL13-24-63	. WASHER, Plain (NA) (89372)	2		
-23	79-028-125-0625	. ROLLPIN (EN) (72962)	1		
-24	AN3-5A	. BOLT	1		
-25	79-028-125-0500	. ROLLPIN (EN) (72962)	1		
-26	209-48146	. PIN, Fuel dump line inboard wing	2		
-27	MS29521-32	. VALVE ASSEMBLY (37152 (KOE) (75361) or 6-3200 (SAHR) (96736) may be substituted)	1		
	ATTACHING PARTS				
-28	AN515-6-4	. SCREW	2		
-29	AN936A6	. WASHER	2		
	---*---				
-30	020854B	. GASK-O-SEAL (WFRC) (83259)	1		
	ATTACHING PARTS				
-31	AN507-1032-7	. SCREW	4		
	---*---				
-32	209-483172	BRACKET, Wingfold fuel dump mechanism	1	FR	
-33	209-483174	BRACE, Wingfold fuel dump mechanism	1	FR	
-34	209-483173	CAM, Wingfold fuel dump mechanism pad	2	FR	
	7S13-1032-20A	SCREW, 100° flush head corrosion-resistant (forward) (NA) (89372)	1	FR	
	7S13-1032-19A	SCREW, 100° flush head corrosion-resistant (aft) (NA) (89372)	1	FR	
	AN315-3R	NUT	4	FR	
-35	AN4-27A	BOLT	4		
-36	2W18-416	WASHER, Flat (NA) (89372)	4		
-37	MS29513-10	PACKING	4		
	209-48103	FITTING ASSEMBLY, Fuel dump housing and bayonet wing outer panel	1	ET	
	209-48103-11	FITTING ASSEMBLY, Fuel dump housing and bayonet wing outer panel	1	FR	
	ATTACHING PARTS				
-38	AN3-11A	BOLT	4		
-39	2W18-10L	WASHER, Flat (NA) (89372)	8		
-40	AN365-1032	NUT	4		
	---*---				
-41	209-48105	. FITTING, Fuel dump bayonet wing outer panel	1	ET	
	209-48105-11	. FITTING, Fuel dump bayonet wing outer panel	1	FR	
-42	209-48147	. ROLLER, Fuel dump fitting wing outer panel	2		
-43	2P9-7-8	. PIN (NA) (89372) (supersedes AN122693 for future procurement)	2		
-44	209-48106-5	. SPRING, Compression	1		
-45	MS29513-325	. PACKING	1		
-46	209-48104	. FITTING, Fuel dump housing wing outer panel	1		
-47	209-48148	. PIN, Fuel dump fitting assembly guide	2		
-48	79-012-062-0500	. ROLLPIN (EN) (72962)	2		
-49	AN364-1032	. NUT	2		

DUMP SYSTEM

FIGURE & INDEX NO.	PART NUMBER	1 2 3 4 5 6 7 NOMENCLATURE	UNITS PER ASSY.	USABLE ON CODE	S/C NO.
112	3655-28D	COUPLING (WIG) (79326)	2		
-50	3605-28D-3	. NUT, Coupling (WIG) (79326)	2		
-51	3601-28D-9	. WASHER, Coupling (WIG) (79326)	4		
-52	MS29513-327	PACKING	2		
-53	209-48150	ELBOW, Fuel dump line wing outer panel	1		
-54	209-487130	ROD ASSEMBLY, Wing fuel dump valve control (see Surface and Secondary Controls for continuation and attaching parts)	1		

FORWARD AND AFT FUEL CELL ASSEMBLY

FIGURE & INDEX NO.	PART NUMBER	1 2 3 4 5 6 7 NOMENCLATURE	UNITS PER ASSY.	USABLE ON CODE	S/C NO.
113-1	209-48002-201	FUEL CELL ASSEMBLY, Forward fuselage (supersedes 209-48002 for future procurement)	1	A	
	209-48002-301	FUEL CELL ASSEMBLY, Forward fuselage (supersedes 209-48002-101 for future procurement)	1	HD	
	209-48002-401	FUEL CELL ASSEMBLY, Forward fuselage	1	FR	
-2	209-48608-1	GROMMET, Forward fuselage fuel cell (make from 295246-44C (UC) (61864))	2	B	
-3	209-48608-3	GROMMET, Forward fuselage fuel cell (make from 295202-46C (UC) (61864))	2	B	
-4	209-48608-5	GROMMET, Forward fuselage fuel cell (make from 295202-40C (UC) (61864))	2	B	
-5	209-483112-1	BAFFLE ASSEMBLY, Forward fuselage fuel cell	1	A	
	209-483112-101	BAFFLE ASSEMBLY, Forward fuselage fuel cell	1	HD	
	209-483112-201	BAFFLE ASSEMBLY, Forward fuselage fuel cell	1	FR	
	AN230A10	. GROMMET	53		
-6	209-483102	BRACE ASSEMBLY, Forward fuselage fuel cell baffle	1		
	ATTACHING PARTS				
-7	AN4-6A	BOLT	2		
	2W1AL17-16-64	WASHER, Plain (NA) (89372)	2		
	AN363-428	NUT	2		
	---*---				
-8	209-483105-1	BRACKET, Single point refueling receptacle spacer	1		
	ATTACHING PARTS				
-9	AN4-11A	BOLT	2		
	2W1AL17-16-64	WASHER, Plain (NA) (89372)	2		
	AN363-428	NUT	2		
	---*---				
-10	209-48209	BRACKET, Single point refueling receptacle	1		
	ATTACHING PARTS				
-11	AN4-10A	BOLT	2		
	2W18-416M	WASHER, Flat (NA) (89372)	4		
	AN365-428	NUT	2		
	---*---				
-12	AN3-11A	BOLT	2		
	2W1AL13-14-32	WASHER, Plain (NA) (89372)	2		
	AN363-1032	NUT	2		
-13	AN4-6A	BOLT	1	FR	
	AN4-5A	BOLT	3	FR	
	AN4-5A	BOLT	4	ET	
	2W18-416	WASHER, Flat (NA) (89372)	2	FR	
	2W1AL17-16-64	WASHER, Plain (NA) (89372)	3	FR	
	2W1AL17-16-64	WASHER, Plain (NA) (89372)	4	ET	
	AN363-428	NUT	3	FR	
	AN363-428	NUT	4	ET	
-14	209-31531-13	FITTING, Fuselage station 131 catapult hook and wing support	1		
	ATTACHING PARTS				
-15	AN8-20A	BOLT	4	FR	
	AN8-21A	BOLT	4	ET	
-16	2W17-816	WASHER, Corrosion-resistant steel (NA) (89372)	4		
-17	209-48213	BUSHING, Forward fuel cell "A" frame	4		
-18	MS29513-112	PACKING	4		
-19	NAS464-16A62	BOLT	2		
-20	2W18-1616M	WASHER, Flat (NA) (89372)	4		
-21	AN364-1614C	NUT	2		
	---*---				
-22	MS29513-260	PACKING	2		
-23	209-31450-5	LINK ASSEMBLY, Fuselage station 131 wing and catapult attaching fitting to longeron (see Fwd Fus - Structure)	2		
	ATTACHING PARTS				
-24	4B20M-S16-110	BUSHING, Press fit flanged (NA) (89372)	2		
-25	209-314120	BUSHING, Fuselage station 131 lower longeron attaching fitting	2		
-26	AN4-5A	BOLT	20		
-27	2W18-416M	WASHER, Flat (NA) (89372)	20		
	---*---				
	209-31450-3	. LINK, Fuselage station 131 wing and catapult attaching fitting to	1		
	1191-4CNx-3/8	. INSERT, Heli-coil (AF) (91767)	10		
-28	59-552-1-5	SEAL, Fuel forward fuselage tank boost pump access door (Parker Appliance Co Rubber Products Div.) (03818) (interchangeable with 5190-527710 (PA) (45681))	1		
-29	MS29513-243	PACKING	1		
-30	209-48215	FITTING ASSEMBLY, Canted station 180.906 fuel	1	NH	
	209-483234	FITTING ASSEMBLY, Canted station 180.906 fuel	1	ME	
	ATTACHING PARTS				
-31	2W18-416	WASHER, Flat (NA) (89372)	7		
-32	AN4-10A	BOLT	7		
	---*---				
-33	209-31518-101	DOOR ASSEMBLY, Fuel access canted station 172 (supersedes 209-31518 for future procurement)	1	ET	
	209-31518-151	DOOR ASSEMBLY, Fuel access canted station 172	1	FR	
	ATTACHING PARTS				
-34	AN4-7A	BOLT	82		
-35	2W18-416	WASHER, Flat (NA) (89372)	82		
-36	AN5-11A	BOLT	2		
-37	2W18-516	WASHER, Flat (NA) (89372)	2		
-38	AN4-5A	BOLT	20		
-39	2W18-416	WASHER, Flat (NA) (89372)	20		

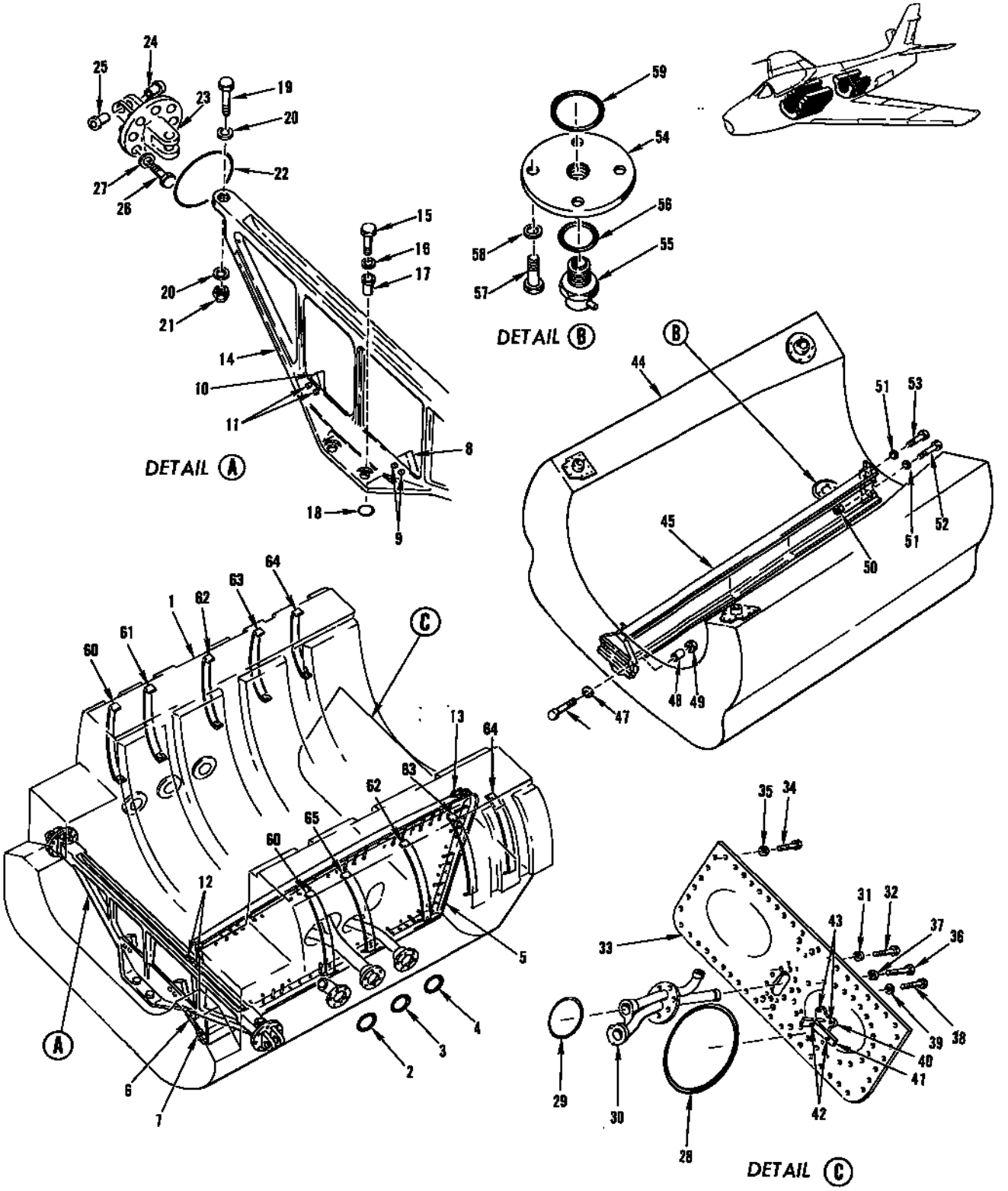

FIGURE 113 - FORWARD AND AFT FUEL CELL ASSEMBLY

FORWARD AND AFT FUEL CELL ASSEMBLY

FIGURE & INDEX NO.	PART NUMBER	1 2 3 4 5 6 7	NOMENCLATURE	UNITS PER ASSY.	USABLE ON CODE	S/C NO.
113	AN4-5A		BOLT	12	FR	
	2W18-416M		WASHER, Flat (NA) (89372)	24	FR	
	AN365-428		NUT	12	FR	
		---*---				
-40	209-483106		. FITTING ASSEMBLY, Forward fuselage fuel baffle float attaching	1		
-41	209-483129		. ANGLE, Fuel level lead clamp support	1	ET	
-42	AN4-7A		. BOLT	2		
-43	AN4-6A		. BOLT	2		
	600-015-1/4OS		. STAT-O-SEAL (WFRC) (83259)	4		
	2W18-416M		. WASHER, Flat (NA) (89372)	8		
	AN363-428		. NUT	4		
	209-315180-11		. FITTING, Canted station 180.906 landing gear door hinge and actuating cylinder support	1		
	4B20S7-009		. . BUSHING, Press fit flanged (NA) (89372)	2		
	4B19S7-006		. . BUSHING, Press fit plain (NA) (89372)	2		
-44	209-48401	*1	CELL ASSEMBLY, Fuel aft fuselage complete	1	BP	
	209-48003		. CELL ASSEMBLY, Fuel aft fuselage	1	BP	
	181-48166		. SPRING, Fuel aft support 5-59/64	24	BP	
	209-48491-11	*1	CELL ASSEMBLY, Fuel system aft fuselage complete	1	BQ	
	209-48003-101		. CELL ASSEMBLY, Fuel aft fuselage	1	BQ	
	181-48166		. SPRING, Fuel aft support 5-59/64	28	BQ	
-45	209-483119	*1	BAFFLE ASSEMBLY, Aft fuselage fuel cell	1	R	
	ATTACHING PARTS					
	209-483115	*1	FILLER, Fuel baffle conical spacer	2	BP	
-46	AN4-5A	*1	BOLT	2	BP	
-47	209-483117	*1	WASHER, Aft fuel cell baffle attaching	2	BP	
-48	NAS43DD4-30	*1	SPACER	2	R	
-49	AN363-428	*1	NUT	2	R	
-50	AN320-4	*1	NUT	2	R	
-51	2W18-416M	*1	WASHER, Flat (NA) (89372)	2	BP	
-52	AN174-7A	*1	BOLT	1	BP	
	2W1AL17-38-62	*1	WASHER, Plain (NA) (89372)	1	BP	
-53	AN174-12A	*1	BOLT	1	BP	
		---*---				
-54	209-48423		FITTING, Fuel aft fuselage cell drain	1		
	ATTACHING PARTS					
-55	CCA4300		DRAIN VALVE (CTAD) (82254) (aft fuel cell sump drain)	1		
-56	MS29512-4		GASKET	1		
-57	AN4-5A		BOLT	4		
-58	2W1AL18-24-64		WASHER, Plain (NA) (89372)	4		
		---*---				
-59	MS29513-216		PACKING	1		
-60	209-48832-121		RETAINER ASSEMBLY, Forward fuselage fuel cell internal	2		
-61	209-48832-131		RETAINER ASSEMBLY, Forward fuselage fuel cell internal RH	1		
-62	209-48832-141		RETAINER ASSEBMLY, Forward fuselage fuel cell internal	2		
-63	209-48832-151		RETAINER ASSEMBLY, Forward fuselage fuel cell internal	2		
-64	209-48832-161		RETAINER ASSEMBLY, Forward fuselage fuel cell internal	2		
-65	209-48832-171		RETAINER ASSEMBLY, Forward fuselage fuel cell internal LH	1		

NOTE: *1 209-48401 together with 209-483119, 209-483115, AN4-5A, 209-483117, NAS43DD4-30, AN363-428, AN320-4, 2W18-416M, AN174-7A, 2W1AL17-38-62 and AN174-12A is superseded by 209-48401-11 on ships coded (R)

209-48401 together with 209-483115, AN4-5A, 209-483117, 2W18-416M, AN174-7A, 2W1AL17-38-62 and AN174-12A is superseded by 209-48401-11 on ships coded (S)

If 209-48201 is reworked, 209-483119, NAS43DD4-30, AN363-428 and AN320-4 are not replaced.

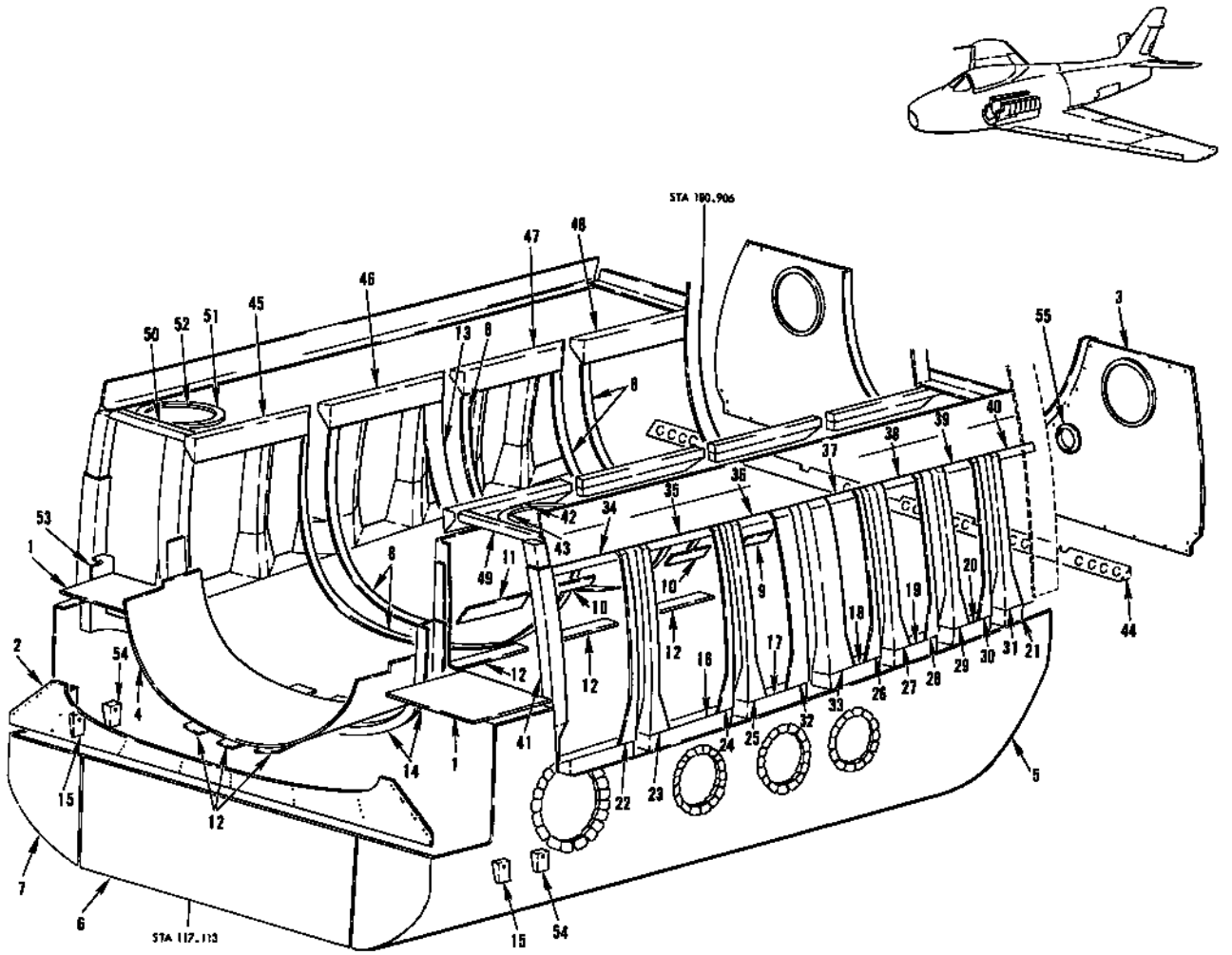

FJ-4/B-4-48-7

FIGURE 114 - FORWARD FUSELAGE FUEL CELL LINERS

FIGURE & INDEX NO.	PART NUMBER	1 2 3 4 5 6 7 NOMENCLATURE	UNITS PER ASSY.	USABLE ON CODE	S/C NO.
114-1	209-48602	LINER SHEET, Forward fuselage fuel cell wl-14.25	2		
-2	209-48607	LINER SHEET, Forward fuselage fuel cell station 117.312	1		
-3	209-48635	LINER SHEET, Forward fuselage cell fuselage station 179.906	1		
-4	209-48636	LINER, Duct station 117 to station 131	1		
-5	209-48621-41	LINER BOARD ASSEMBLY, Forward fuselage fuel cell	1	A	
	209-48621-141	LINER BOARD ASSEMBLY, Forward fuselage fuel cell	1	B	
-6	209-48621-51	LINER BOARD ASSEMBLY, Forward fuselage fuel cell	1		
-7	209-48621-61	LINER BOARD ASSEMBLY, Forward fuselage fuel cell	1	ET	
	209-48621-161	LINER BOARD ASSEMBLY, Forward fuselage fuel cell	1	FR	
-8	209-48641-3	CUSHION, Forward fuselage fuel tank liner installation	5		
-9	209-48641-5	CUSHION, Forward fuselage fuel tank liner installation (one each RH and LH side)	2		
-10	209-48641-9	CUSHION, Forward fuselage fuel tank liner installation (two each RH and LH side)	4		
-11	209-48641-7	CUSHION, Forward fuselage fuel tank liner installation (one each RH and LH side)	2		
-12	209-48641-9	CUSHION, Forward fuselage fuel tank liner installation	6		
-13	209-48641-11	CUSHION, Forward fuselage fuel tank liner installation	1		
-14	209-48641-13	CUSHION, Forward fuselage fuel tank liner installation (one each RH and LH side)	2		

200 GALLON UNDERWING DROP TANK ASSEMBLY

FIGURE & INDEX NO.	PART NUMBER	1 2 3 4 5 6 7 NOMENCLATURE	UNITS PER ASSY.	USABLE ON CODE	S/C NO.
116	181-484150-1	TANK ASSEMBLY, 200 gallon fuel underwing drop LH	1		
	181-484150-2	TANK ASSEMBLY, 200 gallon fuel underwing drop RH	1		
-1	MS29513-214	. PACKING	2		
-2	3655-16D	. COUPLING (WIG) (79326)	2		
-3	3601-16D-9	. . WASHER (WIG) (79326)	4		
-4	181-484110-11	. LINE ASSEMBLY, 200 gallon type II underwing fuel tank float valve	1		
-5	MS29513-120	. PACKING	1		
-6	2-0600	. FLOAT VALVE (SAHR) (96736)	1		
-7	AN4-6A	. BOLT	2		
-8	2W18-416	. WASHER, Flat (NA) (89372)	2		
-9	181-484124	. LINE ASSEMBLY, 200 gallon type II underwing fuel tank air pressure valve	1		
-10	AN815-8D	. UNION	1		
-11	MS29512-8	. GASKET	1		
-12	MS29512-16	. GASKET	1		
-13	AN815-16D	. UNION	1		
-14	3300-200	. RELIEF VALVE (Benton Corp) (98656)	1		
-15	AN4-6A	. BOLT	2		
	AN4-4A	. BOLT	1		
-16	2W18-416	. WASHER, Flat (NA) (89372)	3		
-17	181-484125-11	. LINE ASSEMBLY, 200 gallon type II underwing fuel tank pressure relief (181-484125-11 together with AN815-16D supersedes 181-484125 together with MS28885-16 for future procurement)	1		
-18	181-484102-1	. TANK ASSEMBLY, 200 gallon type II underwing fuel LH	1		
	181-484102-2	. TANK ASSEMBLY, 200 gallon type II underwing fuel RH	1		
-19	181-484105	. . BAFFLE ASSEMBLY, 200 gallon type II underwing fuel tank forward	1		
	176-48259-5	. . . FITTING ASSEMBLY, 200 gallon underwing fuel tank forward attaching	1		
	176-48259-3	FITTING ASSEMBLY, 200 gallon underwing fuel tank forward attaching	1		
-20	NAS147-34	. . BOLT	4		
-21	2W10-7	. . WASHER, Countersunk (NA) (89372)	4		
-22	176-48288-3	. . WASHER, 200 gallon underwing fuel tank post attaching seal	4		
-23	MS92513-13	. . PACKING	4		
-24	181-484120	. . GASKET, 200 gallon underwing fuel tank forward split	1		
-25	181-484145-1	. . BRACE ASSEMBLY, 200 gallon type II fuel tank internal sway LH	1		
-26	181-484145-2	. . BRACE ASSEMBLY, 200 gallon type II fuel tank internal sway RH	1		
-27	181-484142-1	. . . FITTING, 200 gallon type II fuel tank internal sway brace upper LH	1		
	181-484142-2	. . . FITTING, 200 gallon type II fuel tank internal sway brace upper RH	1		
-28	1452-070	. . . NUT, Barrel (EN) (72962)	1		
-29	HS98480	. . . RETAINER (UC) (61864)	1		
-30	181-484143-1	. . . BRACE, 200 gallon underwing fuel tank internal sway	1		
	181-484143-2	. . . BRACE, 200 gallon underwing fuel tank internal sway	1		
-31	AN8-21A	. . . BOLT	4		
-32	AN365-720	. . . NUT	4		
-33	2W18-716	. . . WASHER, Flat (NA) (89372)	8		
-34	181-484144-1	. . . FITTING, 200 gallon type II fuel tank internal sway brace lower LH	1		
	181-484144-2	. . . FITTING, 200 gallon type II fuel tank internal sway brace lower RH	1		
-35	AN9-16A	. . BOLT	2		
-36	2W18-916	. . WASHER, Flat (NA) (89372)	2		
-37	AN365-918	. . NUT	2		
-38	181-484141	. . FITTING, 200 gallon type II fuel tank sway brace tank attaching	1		
-39	NAS147DH19	. . BOLT	1		
-40	MS29513-111	. . PACKING	1		
-41	NAS225-16	. . SCREW	1		
-42	2W18-616M	. . WASHER, Flat (NA) (89372)	1		
-43	205AC-7/16	. . LOCK-O-SEAL (WFRC) (83259)	1		
-44	AN5-13A	. . BOLT	14		
	2W18-516L	. . WASHER, Flat (NA) (89372)	28		
-45	AN5-10A	. . BOLT	2		
	2W18-516	. . WASHER, Flat (NA) (89372)	2		
-46	176-48261-21	. . BAFFLE ASSEMBLY, 200 gallon underwing fuel tank aft	1		
	176-48263-5	. . . FITTING ASSEMBLY, 200 gallon underwing fuel tank aft attaching	1		
	94879	. . . . RETAINER (UC) (61864)	2		
	S-1452-064	. . . . NUT, Barrel (EN) (72962)	2		
	176-48263-3	. . FITTING ASSEMBLY, 200 gallon underwing fuel tank aft attaching	1		
	94879	. . . RETAINER (UC) (61864)	2		
	S-1452-064	. . . NUT, Barrel (EN) (72962)	2		
-47	AN4-13A	. . BOLT	2		
	2W18-416	. . WASHER, Flat (NA) (89372)	4		
-48	AN4-11A	. . BOLT	12		
	2W18-416	. . WASHER, Flat (NA) (89372)	12		
-49	AN4-11A	. . BOLT	1		
	2W18-416	. . WASHER, Flat (NA) (89372)	2		
-50	AN4-7A	. . BOLT	2		
	2W18-416	. . WASHER, Flat (NA) (89372)	2		
-51	NAS146-26	. . BOLT	4		
-52	2W10-6	. . WASHER, Countersunk (NA) (89372)	4		
-53	176-48288-5	. . WASHER, 200 gallon underwing fuel tank post attaching seal	4		
-54	MS29513-12	. . PACKING	4		
-55	181-484121	. . GASKET, 200 gallon underwing fuel tank aft split	1		
-56	181-484107	. . COVER ASSEMBLY, 200 gallon type II underwing fuel tank outlet	1		
-57	176-48269	. . GASKET, 200 gallon underwing fuel tank	1		
-58	205AC-10	. . LOCK-O-SEAL (WFRC) (83259)	16		
-59	2W18-10M	. . WASHER, Flat (NA) (89372)	16		

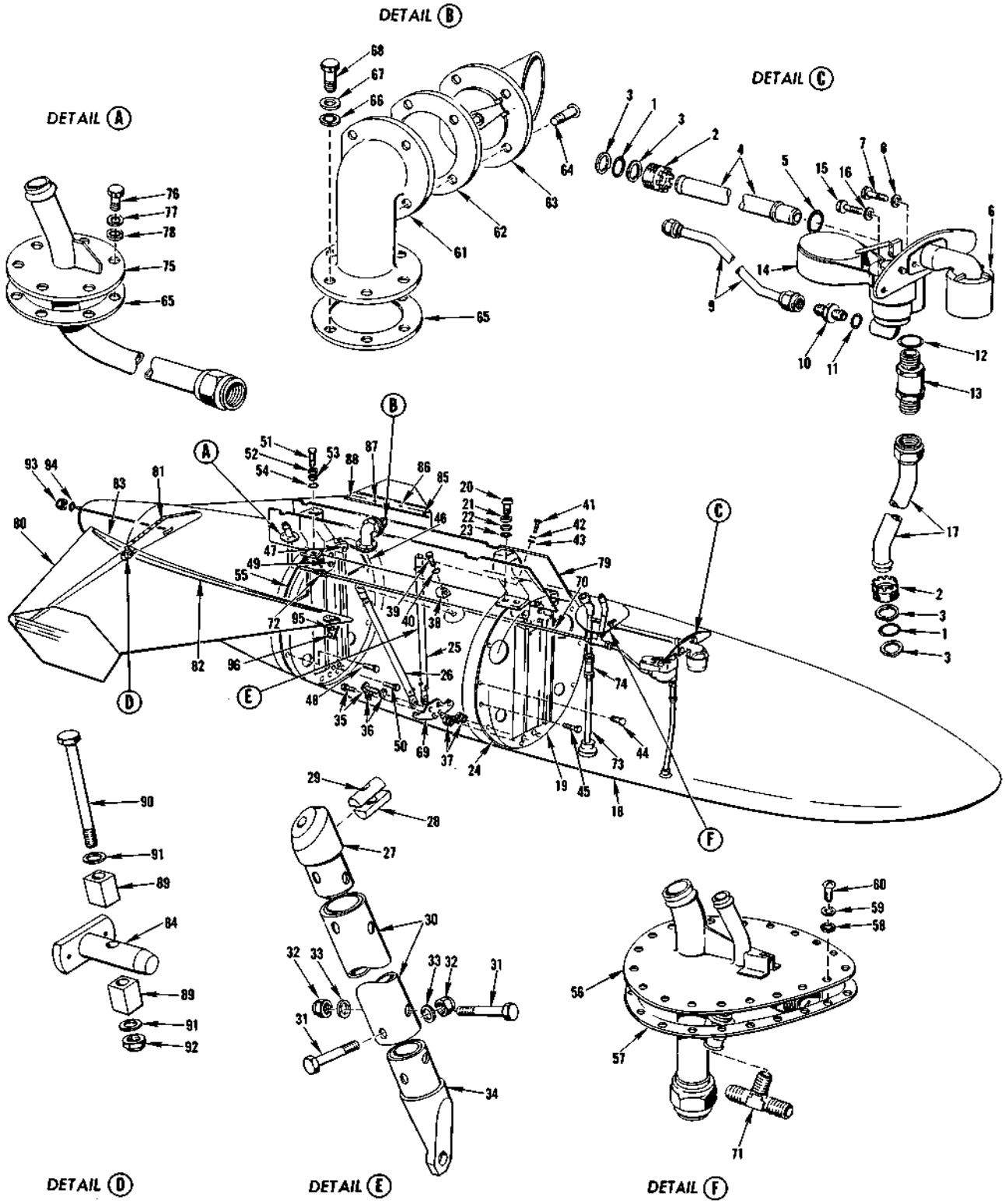

FIGURE 116 - 200 GALLON UNDERWING DROP TANK ASSEMBLY

200 GALLON UNDERWING DROP TANK ASSEMBLY

FIGURE & INDEX NO.	PART NUMBER	1	2	3	4	5	6	7	NOMENCLATURE	UNITS PER ASSY.	USABLE ON CODE	S/C NO.
116-60	NAS221-11	.	.						SCREW	16		
-61	176-48277-31	.	.						HOUSING, 200 gallon underwing fuel tank vent flapper	1		
-62	176-48276	.	.						GASKET, 200 gallon underwing fuel tank dive vent housing	1		
-63	1111-565153	.	.						VALVE ASSEMBLY (PA) (45681) (interchangeable with 5-2200-5 (SAHR) (96736)	1		
-64	AN509-416R13	.	.						SCREW	4		
-65	176-48283	.	.						GASKET, 200 gallon underwing fuel tank dive vent valve	2		
-66	205AC-1/4	.	.						LOCK-O-SEAL (WFRC) (83259)	6		
-67	2W18-4161	.	.						WASHER, Flat (NA) (89372)	6		
-68	AN4H5A	.	.						BOLT	6		
-69	176-48297	.	.						FITTING ASSEMBLY, Underwing fuel tank sway brace	1		
-70	181-484123	.	.						LINE ASSEMBLY, 200 gallon type II underwing tank air pressure	1		
-71	AN824-8D	.	.						TEE	1		
-72	AN815-8D	.	.						UNION	1		
-73	181-484119	.	.						LINE ASSEMBLY, 200 gallon type II underwing tank fuel outlet	1		
-74	MS28885-16	.	.						VALVE (interchangeable with 1111-517706 (PA) (45681)	1		
-75	181-484116	.	.						PLATE ASSEMBLY, 200 gallon type II underwing fuel tank air line	1		
-76	AN4H5A	.	.						BOLT	6		
-77	2W18-416L	.	.						WASHER, Flat (NA) (89372)	6		
-78	205AC-1/4	.	.						LOCK-O-SEAL (WFRC) (83259)	6		
-79	181-484126	.	.						FAIRING ASSEMBLY, 200 gallon type II underwing fuel tank center (see figure 117 for complete breakdown)	1		511 511B
-80	191-48255-51	.	.						FIN ASSEMBLY, 200 gallon underwing fuel tank (supersedes 176-48255 for future procurement)	1		
-81	AN520-10R10	.	.	.					SCREW	9		
	AN365-1032	.	.	.					NUT	9		
	2W18-10M	.	.	.					WASHER, Flat (NA) (89372)	18		
-82	191-48318-1	.	.	.					SEAL, 200 gallon underwing fuel tank fin	1		
	191-48318-2	.	.	.					SEAL, 200 gallon underwing fuel tank fin	1		
-83	191-48270-1	.	.	.					SEAL, 200 gallon underwing fuel tank fin aft	1		
	191-48270-2	.	.	.					SEAL, 200 gallon underwing fuel tank fin aft	1		
-84	176-48254	.	.	.					PIN, 200 gallon underwing fuel tank fin attaching	2		
-85	NAS221-15	.	.	.					SCREW	2		
	AN960D10L	.	.	.					WASHER	2		
	AN365-1032	.	.	.					NUT	2		
-86	NAS221-18	.	.	.					SCREW	2		
	AN960D10L	.	.	.					WASHER	2		
	AN365-1032	.	.	.					NUT	2		
-87	NAS221-20	.	.	.					SCREW	2		
	AN960D10L	.	.	.					WASHER	2		
	AN365-1032	.	.	.					NUT	2		
-88	NAS221-23	.	.	.					SCREW	2		
	AN960D10L	.	.	.					WASHER	2		
	AN365-1032	.	.	.					NUT	2		
-89	176-48260	.	.						BUSHING, 200 gallon underwing fuel tank fin attaching	4		
-90	AN4-21A	.	.						BOLT	2		
-91	2W18-416M	.	.						WASHER, Flat (NA) (89372)	4		
-92	AN364-428	.	.						NUT	2		
-93	AN365-428	.	.						NUT	1		
-94	2W18-416	.	.						WASHER, Flat (NA) (89372)	1		
-95	AN4-10A	.	.						BOLT	2		
	2W18-416	.	.						WASHER, Flat (NA) (89372)	2		
	181-484189-5	.	.						SPACER, 200 gallon type II drop tank fin to tank	2		
	205AC-1/4	.	.						LOCK-O-SEAL (WFRC) (83259)	2		
-96	AN4-10A	.	.						BOLT	2		
	2W18-416	.	.						WASHER, Flat (NA) (89372)	2		
	181-484189-3	.	.						SPACER, 200 gallon type II drop tank fin to tank	2		
	205AC-1/4	.	.						LOCK-O-SEAL (WFRC) (83259)	2		

FORWARD CENTER AND AFT FUEL DROP TANK SECTIONS
(see figure 118 for breakdown)

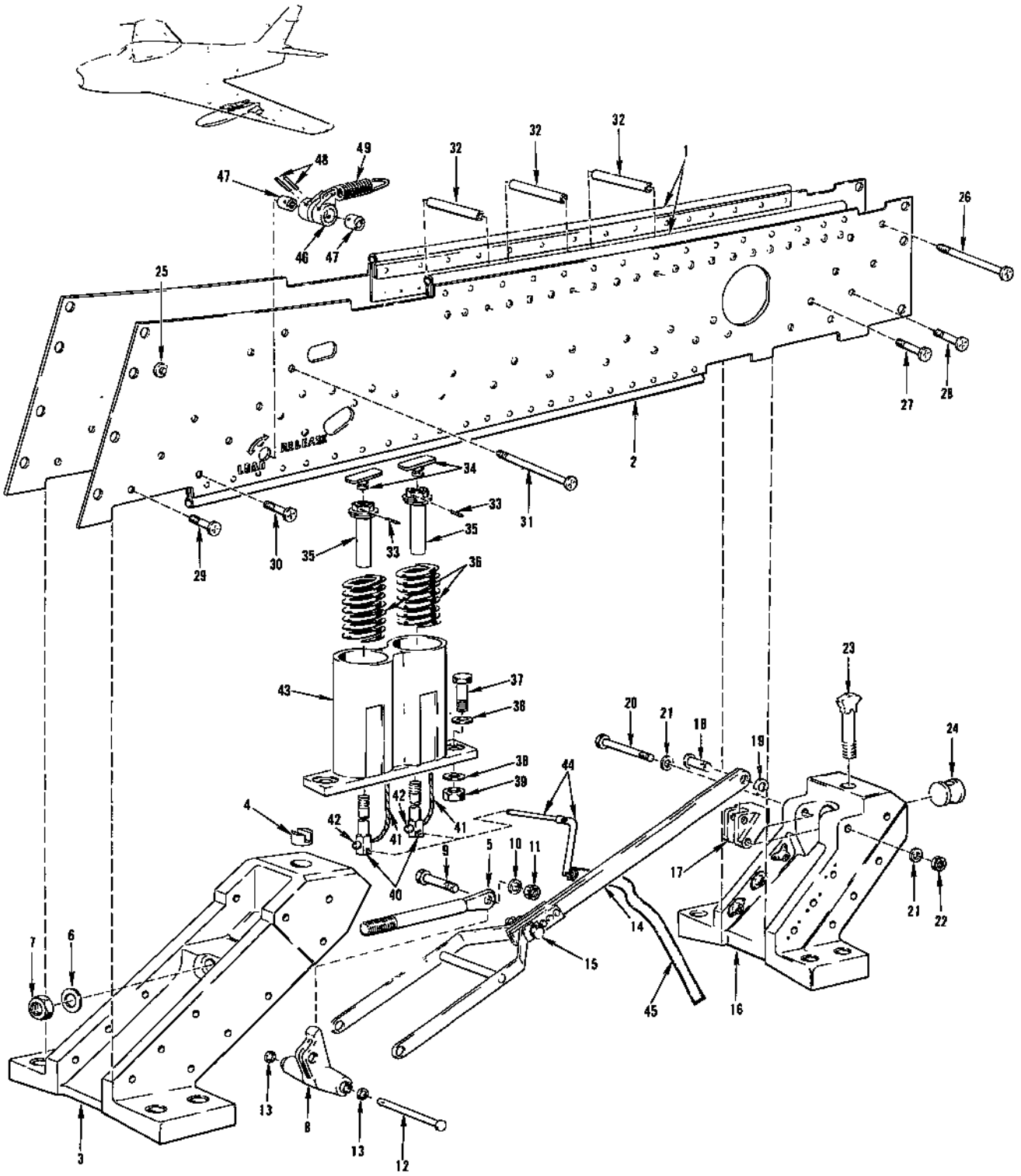

FIGURE 117 - 200 GALLON TYPE II UNDERWING FUEL TANK CENTER FAIRING ASSEMBLY AND EJECTOR CAP ASSEMBLY KIT

200 GALLON TYPE II UNDERWING FUEL TANK CENTER FAIRING ASSEMBLY AND EJECTOR CAP ASSEMBLY KIT

FIGURE & INDEX NO.	PART NUMBER	1	2	3	4	5	6	7	NOMENCLATURE	UNITS PER ASSY.	USABLE ON CODE	S/C NO.
117	181-484126-1								FAIRING ASSEMBLY, 200 gallon type II underwing fuel tank center LH (superseded by 181-484126-21) (see figure 116 for next assembly)	1		511
	181-484126-21								FAIRING ASSEMBLY, 200 gallon type II underwing fuel tank center LH (supersedes 181-484126-1) (superseded by 181-484126-31) (see figure 116 for next assembly)	1		511B
	181-484126-31								FAIRING ASSEMBLY, 200 gallon type II underwing fuel tank center LH (supersedes 181-484126-21) (see figure 116 for next assembly)	1		
	181-484126-2								FAIRING ASSEMBLY, 200 gallon type II underwing fuel tank center RH (superseded by 181-484126-22) (see figure 116 for next assembly)	1		511
	181-484126-22								FAIRING ASSEMBLY, 200 gallon type II underwing fuel tank center RH (supersedes 181-484126-2) (superseded by 181-484126-32) (see figure 116 for next assembly)	1		511B
	181-484126-32								FAIRING ASSEMBLY, 200 gallon type II underwing fuel tank center RH (supersedes 181-484126-22) (see figure 116 for next assembly)	1		
-1	5W1-9-21-12		.						WEATHER SEAL (NA) (89372)	2		
-2	5W1-6-27-10	*1	.						WEATHER SEAL (NA) (89372)	2		
	5W1-9-21-12	*2	.						WEATHER SEAL (NA) (89372)	2		
-3	181-484127-11		.						POST ASSEMBLY, 200 gallon type II underwing fuel tank forward	1		
-4	181-48277		.						. INSERT, 200 gallon underwing fuel tank forward	1		
-5	181-484131		.						BOLT, 200 gallon type II underwing fuel tank release	1		
-6	2W17-816		.						WASHER, Corrosion-resistant steel (NA) (89372)	1		
-7	1N7-8A		.						NUT, Check (NA) (89372)	1		
-8	181-484178		.						LEVER, 200 gallon fuel tank front post support	1		
-9	NAS464-5-11		.						BOLT	1		
-10	2W18-516M		.						WASHER, Flat (NA) (89372)	1		
-11	AN320-5		.						NUT	1		
-12	AN394-69		.						PIN	1		
-13	2W1-16-24-63		.						WASHER, Plain (NA) (89372)	2		
-14	181-484182		.						STRAP ASSEMBLY, 200 gallon droppable fuel tank release lever actuator	1		
-15	AN4-11A		.						. BOLT	1		
	2W18416		.						. WASHER, Flat (NA) (89372)	2		
	AN365-428		.						. NUT	1		
-16	181-484128-11		.						POST ASSEMBLY, 200 gallon type II underwing fuel tank (used on 181-484126-1, 181-484126-2, 181-484126-21, and 181-484126-22 assemblies)	1		511B
	181-484128-21		.						POST ASSEMBLY, 200 gallon type II underwing fuel tank (used on 181-484126-31 and 181-484126-32 assemblies only)	1		
-17	181-48230-3		.						LEVER, 200 gallon fuel tank rear post release	1		
-18	AN394-17		.						PIN	1		
-19	2W17-416M		.						WASHER, Corrosion-resistant steel (NA) (89372)	1		
-20	NAS464-4-37		.						BOLT	1		
-21	2W18-416		.						WASHER, Flat (NA) (89372)	2		
-22	AN320-4		.						NUT	1		
-23	181-48235		.						STUD, 200 gallon fuel tank rear support attaching	1		
-24	181-48276		.						NUT, 200 gallon underwing fuel tank aft past	1		
-25	AN3117-1		.						RECEPTACLE	1		
-26	HT5M-35		.						BOLT, 100° countersunk head (HIS) (73197)	1		
	2W18-516		.						WASHER, Flat (NA) (89372)	1		
	AN365-524		.						NUT	1		
-27	HT5M-5		.						BOLT, 100° countersunk head (HIS) (73197)	6		
-28	HT5M-5		.						BOLT, 100° countersunk head (HIS) (73197)	6		
	2W18-516		.						WASHER, Flat (NA) (89372)	6		
	AN365-524		.						NUT	6		
-29	HT5M-6		.						BOLT, 100° countersunk head (HIS) (73197)	6		
	2W18-516		.						WASHER, Flat (NA) (89372)	6		
	AN365-524		.						NUT	6		
-30	HT5M-5		.						BOLT, 100° countersunk head (HIS) (73197)	6		
-31	NAS336CPA26		.						BOLT	3		
	2W18-616		.						WASHER, Flat (NA) (89372)	3		
	AN365-624		.						NUT	3		
-32	NAS42DD6-120		.						SPACER	3		
-33	79-022-94-0937		.						ROLLPIN (EN) (72962)	2		
-34	181-484185		.						CAP ASSEMBLY, Spring loaded fuel tank ejector	2		516
	181-484185-11		.						CAP ASSEMBLY, Spring loaded fuel tank ejector	2		
-35	181-484179		.						PLUNGER, Spring loaded fuel tank ejector	2		
-36	181-484177		.						SPRING, Compression	2		
-37	AN4-6A		.						BOLT	2		
-38	2W17-416M		.						WASHER, Corrosion-resistant steel (NA) (89372)	4		
-39	AN365-428		.						NUT	2		
	181-484173		.						CABLE ASSEMBLY, Spring loaded fuel tank ejector	2		
-40	181-484180		.						. SHAFT, Spring loaded fuel tank ejector	1		
-41	181-484173-3		.						. CABLE, Spring loaded fuel tank ejector	1		
-42	AN664C2		.						. TERMINAL	2		
-43	181-484181		.						HOUSING, Spring loaded fuel tank ejector	1		
	181-484190		.						PIN ASSEMBLY, Spring loaded fuel tank ejector	2		
-44	181-484175		.						. RIG PIN, Spring loaded fuel tank ejector	1		
-45	12S2		.						. STREAMER, Red warning (NA) (89372)	1		
	5R10		.						. RING, Chain retainer (NA) (89372)	1		
-46	244-48310-3		.						BELLCRANK, 200 gallon fuel tank spring (used on 181-484126-21, 181-484126-22, 181-484126-31, and 181-484126-32)	1		
-47	244-48313		.						INSERT, 200 gallon fuel tank bellcrank (used on 181-484126-21, 181-484126-22, 181-484126-31, and 181-484126-32)	2		

200 GALLON TYPE II UNDERWING FUEL TANK CENTER FAIRING ASSEMBLY AND EJECTOR CAP ASSEMBLY KIT

FIGURE & INDEX NO.	PART NUMBER	1	2	3	4	5	6	7	NOMENCLATURE	UNITS PER ASSY.	USABLE ON CODE	S/C NO.
117-48	NAS561C4-16	.							PIN (used on 181-484126-21, 181-484126-22, 181-484126-31, and 181-484126-32)	2		
-49	244-48311	.							SPRING, Tension	1		

NOTE: *1 Used on kits H-0001 thru H-1842
*2 Used on kits H-1843 and subsequent

200 GALLON TYPE II UNDERWING FUEL TANK CENTER FAIRING ASSEMBLY

FIGURE & INDEX NO.	PART NUMBER	1 2 3 4 5 6 7 NOMENCLATURE	UNITS PER ASSY.	USABLE ON CODE	S/C NO.
117	181-484126-1	FAIRING ASSEMBLY, 200 gallon type II underwing fuel tank center LH (superseded by 181-484126-2) (see figure 116 for next assembly)	1		
	181-484126-21	FAIRING ASSEMBLY, 200 gallon type II underwing fuel tank center LH (supersedes 181-484126-1) (see figure 116 for next assembly)	1		
	181-484126-2	FAIRING ASSEMBLY, 200 gallon type II underwing fuel tank center RH (superseded by 181-484126-22) (see figure 116 for next assembly)	1		
	181-484126-22	FAIRING ASSEMBLY, 200 gallon type II underwing fuel tank center RH (supersedes 181-484126-2) (see figure 116 for next assembly)	1		
-1	5W1-9-21-12	. WEATHERSEAL (NA) (89372)	2		
-2	5W1-6-27-10	. WEATHERSEAL (NA) (89372)	2		
-3	181-484127-11	. POST ASSEMBLY, 200 gallon type II underwing fuel tank forward	1		
-4	181-48277	. . INSERT, 200 gallon underwing fuel tank forward	1		
-5	181-484131	. BOLT, 200 gallon type II underwing fuel tank release	1		
-6	2W17-816	. WASHER, Corrosion-resistant steel (NA) (89372)	1		
-7	1N7-8A	. NUT, Check (NA) (89372)	1		
-8	181-484178	. LEVER, 200 gallon fuel tank front post support	1		
-9	NAS464-5-11	. BOLT	1		
-10	2W18-516M	. WASHER, Flat (NA) (89372)	1		
-11	AN320-5	. NUT	1		
-12	AN394-69	. PIN	1		
-13	2W1-16-24-63	. WASHER, Plain (NA) (89372)	2		
-14	181-484182	. STRAP ASSEMBLY, 200 gallon droppable fuel tank release lever actuator	1		
-15	AN4-11A	. . BOLT	1		
	2W18-416	. . WASHER, Flat (NA) (89372)	2		
	AN365-428	. . NUT	1		
-16	181-484128-11	. POST ASSEMBLY, 200 gallon type II underwing fuel tank	1		
-17	181-48230-3	. LEVER, 200 gallon fuel tank rear post release	1		
-18	AN394-17	. PIN	1		
-19	2W17-416M	. WASHER, Corrosion-resistant steel (NA) (89372)	1		
-20	NAS464-4-37	. BOLT	1		
-21	2W18-416	. WASHER, Flat (NA) (89372)	2		
-22	AN320-4	. NUT	1		
-23	181-48235	. STUD, 200 gallon fuel tank rear support attaching	1		
-24	181-48276	. NUT, 200 gallon underwing fuel tank aft post	1		
-25	AN3117-1	. RECEPTACLE	1		
-26	HT5M-35	. BOLT, 100° countersunk head (HIS) (73197)	1		
	2W18-516	. WASHER, Flat (NA) (89372)	1		
	AN365-524	. NUT	1		
-27	HT5M-5	. BOLT, 100° countersunk head (HIS) (73197)	6		
-28	HT5M-5	. BOLT, 100° countersunk head (HIS) (73197)	6		
	2W18-516	. WASHER, Flat (NA) (89372)	6		
	AN365-524	. NUT	6		
-29	HT5M-6	. BOLT, 100° countersunk head (HIS) (73197)	6		
	2W18-516	. WASHER, Flat (NA) (89372)	6		
	AN365-524	. NUT	6		
-30	HT5M-5	. BOLT, 100° countersunk head (HIS) (73197)	6		
-31	NAS336CPA26	. BOLT	3		
	2W18-616	. WASHER, Flat (NA) (89372)	3		
	AN365-624	. NUT	3		
-32	NAS42DD6-120	. SPACER	3		
-33	79-022-94-0937	. ROLLPIN (EN) (72962)	2		
-34	181-484185	. CAP ASSEMBLY, Spring loaded fuel tank ejector	2		
-35	181-484179	. PLUNGER, Spring loaded fuel tank ejector	2		
-36	181-484177	. SPRING, Compression	2		
-37	AN4-6A	. BOLT	2		
-38	2W17-416M	. WASHER, Corrosion-resistant steel (NA) (89372)	4		
-39	AN365-428	. NUT	2		
	181-484173	. CABLE, Spring loaded fuel tank ejector assembly of	2		
-40	181-484180	. . SHAFT, Spring loaded fuel tank ejector	1		
-41	181-484173-3	. . CABLE, Spring loaded fuel tank ejector	1		
-42	AN664C2	. . TERMINAL	2		
-43	181-484181	. HOUSING, Spring loaded fuel tank ejector	1		
	181-484190	. PIN ASSEMBLY, Spring loaded fuel tank ejector	2		
-44	181-484175	. . RIGPIN, Spring loaded fuel tank ejector	1		
-45	12S2	. . STREAMER, Red warning (NA) (89372)	1		
	5R10	. . RING, Chain retainer (NA) (89372)	1		
-46	244-48310	. BELLCRANK, 200 gallon fuel tank spring (used on 181-484126-21 and 181-484126-22 only)	1		
-47	244-48313	. INSERT, 200 gallon fuel tank bellcrank (used on 181-484126-21 and 181-484126-22 only)	2		
-48	NAS561C4-16	. PIN (used on 181-484126-21 and 181-484126-22 only)	2		

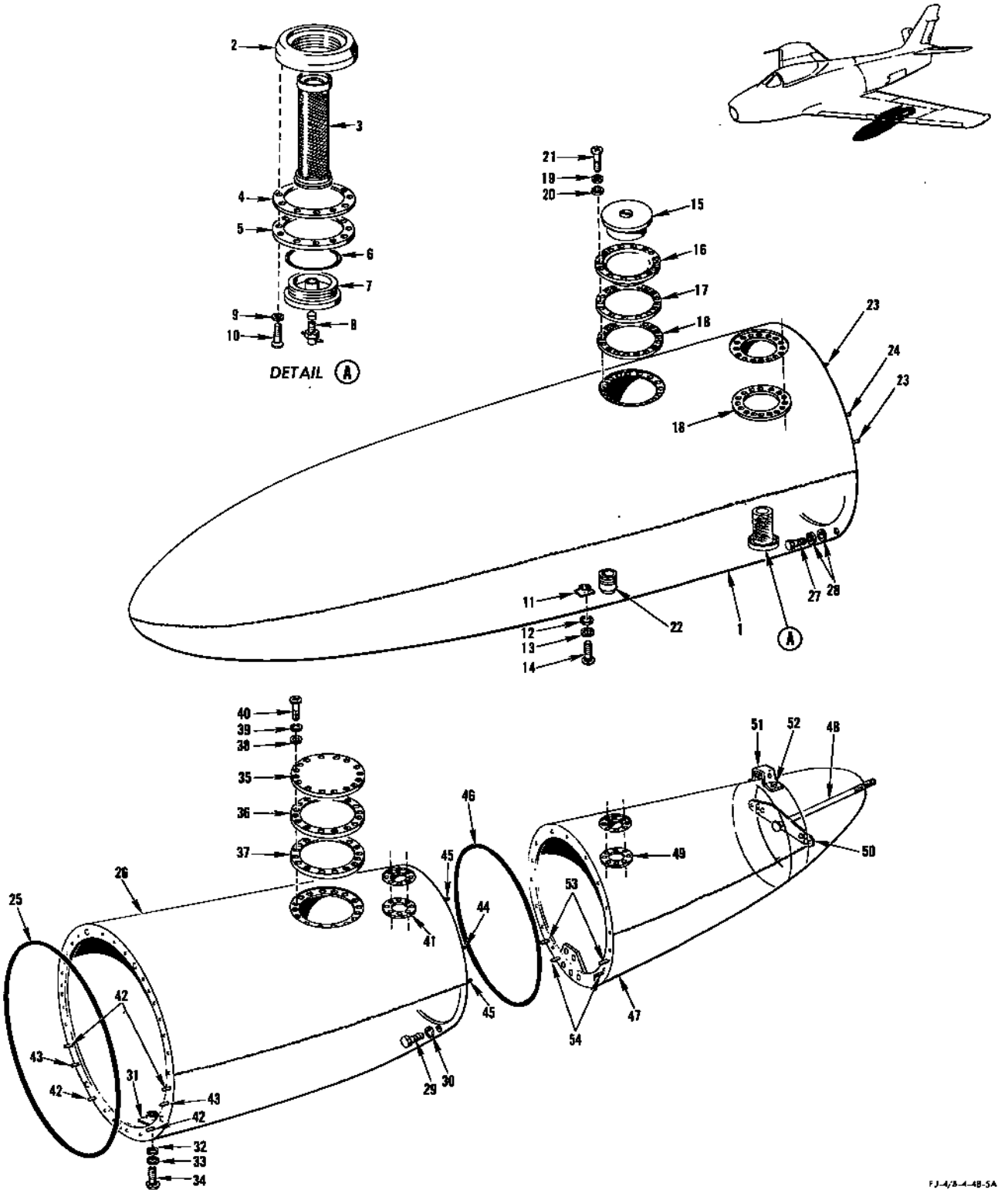

FIGURE 118 - FORWARD, CENTER AND AFT FUEL DROP TANK SECTIONS

FORWARD CENTER AND AFT FUEL DROP TANK SECTIONS

FIGURE & INDEX NO.	PART NUMBER	1 2 3 4 5 6 7 NOMENCLATURE	UNITS PER ASSY.	USABLE ON CODE	S/C NO.
118-1	181-484103-21	TANK ASSEMBLY, 200 gallon underwing type II fuel forward section (supersedes 181-484103 for future procurement)	1		
-2	161-48283	. FLANGE, Drop fuel tank strainer support	1		
-3	1260	. STRAINER (Ohio Fabricators Co) (99537)	1		
-4	161-48284	. GASKET, Drop tank strainer support flange	1		
-5	161-48285	. RETAINER, Drop fuel tank strainer support flange	1		
-6	AN900-34	. GASKET	1		
-7	134-48331	. PLUG, Combat fuel tank strainer retainer	1		
-8	AN913-1	. PLUG	1		
-9	AN935-10	. WASHER	12		
-10	NAS221-10	. SCREW	12		
-11	161-48286	. BRACKET ASSEMBLY, Drop fuel tank plug	1		
-12	205AC-1/4	. LOCK-O-SEAL (WFRC) (83259)	1		
-13	2W18-416M	. WASHER, Flat (NA) (89372)	1		
-14	161-48322	. SCREW, Drop fuel tank drain	1		
-15	CM2430	. CAP ASSEMBLY (EM) (81118)	1		
-16	NM2669	. ADAPTER (EM) (81118)	1		
-17	176-48269	. GASKET, 200 gallon underwing fuel tank	1		
-18	176-48271	. RING ASSEMBLY, 200 gallon underwing fuel tank outlet	2		
-19	2W18-10M	. WASHER, Flat (NA) (89372)	16		
-20	205AC-10	. LOCK-O-SEAL (WFRC) (83259)	16		
-21	NAS221-11	. SCREW	16		
-22	181-484113	. FITTING, 200 gallon underwing type II fuel tank relief line	1		
-23	2R6-8-4-8	. STUD, Hi-shear rivet (NA) (89372)	4		
	2W18-416	. WASHER, Flat (NA) (89372)	8		
	NAS179-8	. COLLAR	4		
-24	2R6-8-4-10	. STUD, Hi-shear rivet (NA) (89372)	2		
	2W18-416	. WASHER, Flat (NA) (89372)	4		
	NAS179-8	. COLLAR	2		
-25	181-484120	GASKET, 200 gallon underwing fuel tank forward split	1		
-26	181-484104	TANK ASSEMBLY, 200 gallon underwing type II fuel center section	1		
	ATTACHING PARTS				
-27	AN5-13A	BOLT	14		
-28	2W18-516L	WASHER, Flat (NA) (89372)	28		
-29	AN4-11A	BOLT	12		
-30	2W18-416	WASHER, Flat (NA) (89372)	12		
	---*---				
-31	161-48286	. BRACKET ASSEMBLY, Drop fuel tank plug	1		
-32	205AC-1/4	. LOCK-O-SEAL (WFRC) (83259)	1		
-33	2W18-416M	. WASHER, Flat (NA) (89372)	1		
-34	161-48322	. SCREW, Drop fuel tank drain	1		
-35	181-484117	. INSPECTION PLATE, 200 gallon underwing type II fuel tank	1		
-36	176-48269	. GASKET, 200 gallon underwing fuel tank	1		
-37	176-48271	. RING ASSEMBLY, 200 gallon underwing fuel tank outlet	1		
-38	205AC-10	. LOCK-O-SEAL (WFRC) (83259)	16		
-39	2W18-10M	. WASHER, Flat (NA) (89372)	16		
-40	NAS221-11	. SCREW	16		
-41	176-48275-11	. RING, 200 gallon underwing fuel tank dive vent	1		
-42	2R6-8-4-8	. STUD, Hi-shear rivet (NA) (89372)	4		
	2W18-416	. WASHER, Flat (NA) (89372)	8		
	NAS179-8	. COLLAR	4		
-43	2R6-8-4-10	. STUD, Hi-shear rivet (NA) (89372)	2		
	2W18-416	. WASHER, Flat (NA) (89372)	4		
	NAS179-8	. COLLAR	2		
-44	2R6-6-3-10	. STUD, Hi-shear rivet (NA) (89372)	2		
	2W18-10	. WASHER, Flat (NA) (89372)	4		
	NAS179-6	. COLLAR	2		
-45	2R6-6-3-8	. STUD, Hi-shear rivet (NA) (89372)	4		
	2W18-10	. WASHER, Flat (NA) (89372)	8		
	NAS179-6	. COLLAR	4		
-46	181-484121	GASKET, 200 gallon underwing fuel tank aft split	1		
-47	176-48253-41	TANK ASSEMBLY, 200 gallon underwing fuel aft section	1		
-48	176-48272	. BOLT, 200 gallon underwing fuel tank cone attaching	1		
-49	176-48275-11	. RING, 200 gallon underwing fuel tank dive vent	1		
-50	181-48451	. BRACKET, Fuel tank aft fin attaching (supersedes 176-48256 for future procurement)	1		
	ATTACHING PARTS				
	HT4M-5	. BOLT, 100° countersunk head (HIS) (73197)	6		
	MS29513-10	. PACKING	6		
	---*---				
-51	181-484112	. BRACKET, 200 gallon underwing type II fuel tank fairing aft	1		
	ATTACHING PARTS				
-52	AN4-6A	. BOLT	2		
	2W18-416	. WASHER, Flat (NA) (89372)	4		
	800-501-1/4	. LOCK-O-SEAL (WFRC) (83259) (use under bracket)	2		
	AN365-428	. NUT	2		
	---*---				
-53	2R6-6-3-10	. STUD, Hi-shear rivet (NA) (89372)	2		
	AN960D10	. WASHER	2		
	NAS179-6	. COLLAR	2		
-54	2R6-6-3-8	. STUD, Hi-shear rivet (NA) (89372)	2		
	AN960D10	. WASHER	2		
	NAS179-6	. COLLAR	2		

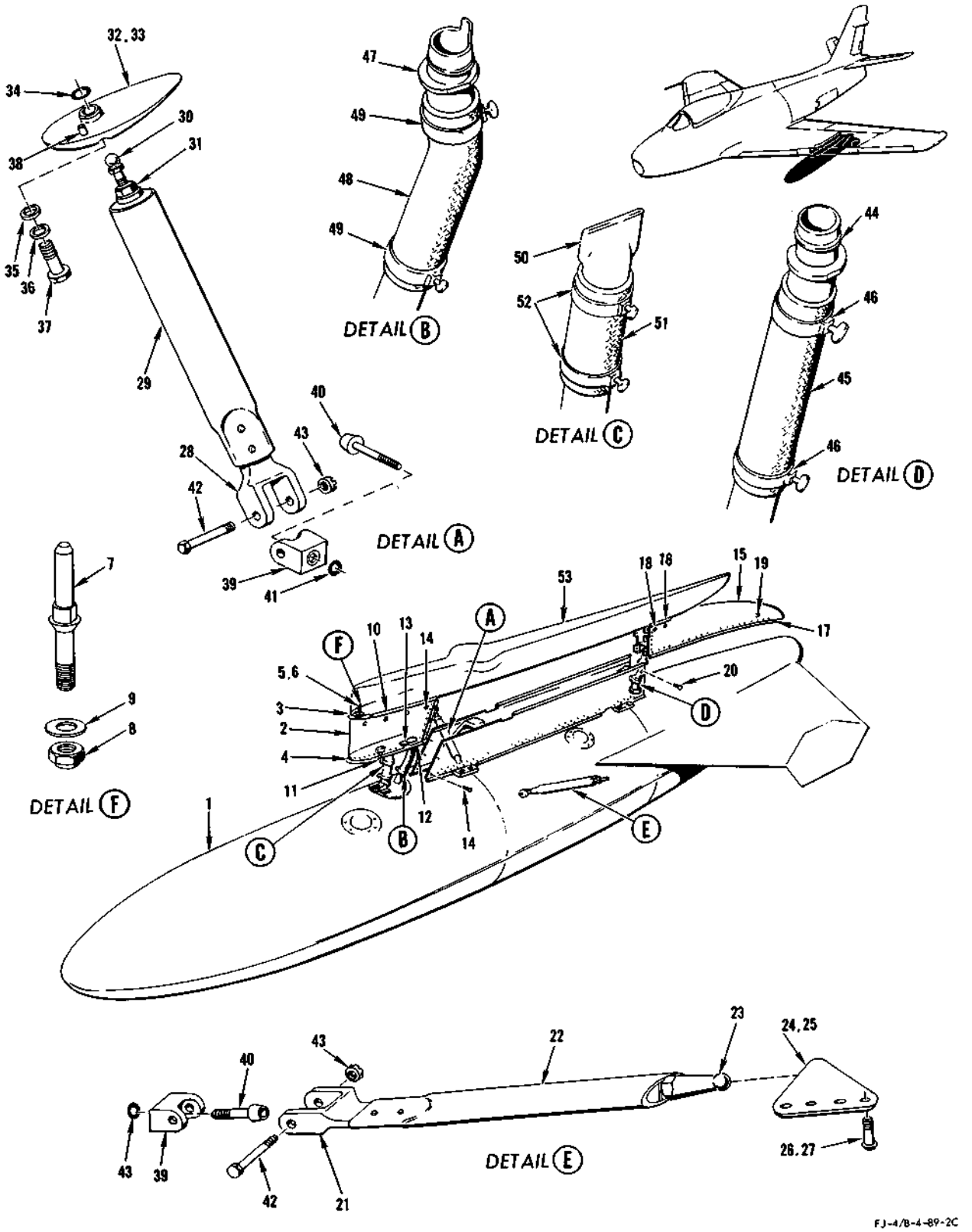

FIGURE 119 - 200 GALLON TYPE II UNDERWING FUEL TANK FAIRING AND ATTACHING FITTINGS

200 GALLON TYPE II UNDERWING FUEL TANK FAIRING AND ATTACHING FITTINGS

FIGURE & INDEX NO.	PART NUMBER	1 2 3 4 5 6 7 NOMENCLATURE	UNITS PER ASSY.	USABLE ON CODE	S/C NO.
119-1	181-484150	TANK ASSEMBLY, 200 gallon fuel underwing drop (see figure 116 for complete breakdown)	1		
-2	209-48392-1	FAIRING ASSEMBLY, 200 gallon type II underwing fuel drop tank LH	1		479
	209-48392-2	FAIRING ASSEMBLY, 200 gallon type II underwing fuel drop tank RH	1		479
-3	S-9281-1	. WEATHERSEAL (KH) (75345) (interchangeable with TR-12008 (TRB) (82689)	1		
-4	S-9281-2	. WEATHERSEAL (KH) (75345) (interchangeable with TR-12008 (TRB) (82689)	1		
	209-48392-21	*1 . FAIRING SUBASSEMBLY, 200 gallon type II underwing fuel drop tank LH (superseded by 209-48392-31 for future procurement)	1		
	209-48392-22	*1 . FAIRING SUBASSEMBLY, 200 gallon type II underwing fuel drop tank RH (superseded by 209-48392-32 for future procurement)	1		
	209-48392-31	*2 . FAIRING SUBASSEMBLY, 200 gallon type II underwing fuel drop tank LH (supersedes 209-48392-21 for future procurement)	1		
	209-48392-32	*2 . FAIRING SUBASSEMBLY, 200 gallon type II underwing fuel drop tank RH (supersedes 209-48392-22 for future procurement)	1		
-5	HS2018-6-7-22	*2 . . STUD PIN, Hi-shear rivet (HIS) (73197)	1		
-6	HS10-6-7-14	*1 . . STUD PIN, Hi-shear rivet (HIS) (73197)	1		479
-7	209-483244	. . PIN, Type II underwing fuel tank nose fairing	1		479
-8	AN365-1032	. . NUT	1		479
-9	2W18-10	. . WASHER, Flat (NA) (89372)	1		479
-10	5W1-9-14	. . WEATHERSEAL (NA) (89372)	2		
	209-48392-11	. FAIRING SUBASSEMBLY, 200 gallon type II underwing fuel drop tank LH	1		
	209-48392-12	. FAIRING SUBASSEMBLY, 200 gallon type II underwing fuel drop tank RH	1		
-11	2R6-8-7-12	. . STUD, Hi-shear rivet (NA) (89372)	1		
-12	5W1-6-10-8	. . WEATHERSEAL (NA) (89372)	2		
-13	181-484148	. SUPPORT, 200 gallon underwing type II fuel tank fuel line nipple	1		
	ATTACHING PARTS				
	AN3-4	. BOLT	1		
	2W18-10M	. WASHER, Flat (NA) (89372)	1		
	---*---				
-14	SP1561-1032-8	SCREW (SH) (78189)	14		
-15	181-484115	FAIRING ASSEMBLY, Type II underwing tank aft	1		
-16	181-484115-13	. SEAL, Type II underwing tank aft fairing assembly	1		
-17	5W1-6-25-9	. WEATHERSEAL (NA) (89372)	2		
-18	SP1561-1032-8	. SCREW (SH) (78189)	4		
-19	SP1561-1032-10	SCREW (SH) (78189)	2		
-20	SP1561-1032-8	SCREW (SH) (78189)	6		
	181-484155-11	SWAYBRACE, 200 gallon type II underwing fuel tank outboard	1		
-21	181-484157-3	. FITTING, 200 gallon underwing type II fuel tank swaybrace (magnetic inspected)	1		
-22	181-484155-3	. TUBE, 200 gallon underwing type II fuel tank outboard swaybrace (magnetic inspected)	1		
	181-484187	. BALL ASSEMBLY, 200 gallon underwing type II fuel tank swaybrace outboard	1		
-23	181-484186-3	. . PLUNGER, 200 gallon underwing type II fuel tank swaybrace ball (magnetic inspected)	1		
	ATTACHING PARTS				
	AN23-25	. . BOLT	1		
	2W17-10M	. . WASHER, Corrosion-resistant steel (NA) (89372)	1		
	AN320-3	. . NUT	1		
	---*---				
	181-484159	. . GUIDE, 200 gallon underwing type II fuel tank swaybrace	1		
	181-484163	. . SPRING, Compression	1		
-24	209-48343-5	FITTING, Drop tank strut outboard LH (magnetic inspected) (supersedes 209-48343-3 for future procurement)	1	ET	479
	209-48343-6	FITTING, Drop tank strut outboard RH (magnetic inspected) (supersedes 209-48343-4 for future procurement)	1	ET	479
-25	209-483217-3	FITTING, Drop tank strut outboard LH (magnetic inspected)	1	FR	479
	209-483217-4	FITTING, Drop tank strut outboard RH (magnetic inspected)	1	FR	479
	ATTACHING PARTS				
-26	NAS223-15	SCREW	4	ET	479
-27	NAS223-22	SCREW	4	FR	479
	---*---				
	181-484156-11	SWAYBRACE, 200 gallon type II underwing fuel tank inboard	1		479
-28	181-484157-3	. FITTING, 200 gallon underwing type II fuel tank swaybrace (magnetic inspected)	1		
-29	181-484156-3	. TUBE, 200 gallon underwing type II fuel tank inboard swaybrace (magnetic inspected)	1		
	181-484158	. BALL ASSEMBLY, 200 gallon underwing type II fuel tank swaybrace	1		
-30	181-484161-11	*4 . . BALL, 200 gallon underwing type II fuel tank swaybrace (magnetic inspected) (supersedes 181-484161 for future procurement)	1		479
	181-484161	*3 . . BALL, 200 gallon underwing type II fuel tank swaybrace (magnetic inspected) (superseded by 181-484161-11 for future procurement)	1		479
	ATTACHING PARTS				
	AN23-25	. . BOLT	1		
	2W17-10M	. . WASHER, Corrosion-resistant steel (NA) (89372)	1		
	AN320-3	. . NUT	1		
	---*---				
-31	181-484162	. . NUT, 200 gallon underwing type II fuel tank swaybrace	1		
	181-484160	. . PLUNGER, 200 gallon underwing type II fuel tank swaybrace (magnetic inspected)	1		
	181-484163	. . SPRING, Compression	1		
	181-484159	. . GUIDE, 200 gallon underwing type II fuel tank swaybrace	1		
-32	209-48346-11	FITTING, Drop tank strut inboard LH	1	ET	479

200 GALLON TYPE II UNDERWING FUEL TANK FAIRING AND ATTACHING FITTINGS

FIGURE & INDEX NO.	PART NUMBER	1 2 3 4 5 6 7 NOMENCLATURE	UNITS PER ASSY.	USABLE ON CODE	S/C NO.
119	209-48346-12	FITTING, Drop tank strut inboard RH	1	ET	479
-33	209-48305-11	FITTING, Drop tank strut inboard LH	1	FR	479
	209-48305-12	FITTING, Drop tank strut inboard RH	1	FR	479
	ATTACHING PARTS				
-34	AN6227B11	PACKING	1		
-35	600-001-1/2	STAT-O-SEAL (WFRC) (83259)	1		
-36	2W17-816M	WASHER, Corrosion-resistant steel (NA) (89372)	1		
-37	AN8H11A	BOLT	1		
	---*---				
-38	209-63062	. PIN, Strut fitting alignment	1		
-39	181-484141	FITTING, 200 gallon type II fuel tank swaybrace attaching (magnetic inspected)	2		
-40	NAS147DH19	BOLT	2		
-41	MS29513-13	PACKING	2		
-42	NAS464-6-29	BOLT	2		
-43	AN320-6	NUT	2		
-44	181-484140	NIPPLE, 200 gallon underwing fuel tank air line disconnect	1		
-45	3H2-8-33	HOSE (NA) (89372) (cut to fit)	1		
-46	AN737RM30	CLAMP	2		
-47	181-484122	NIPPLE, 200 gallon underwing fuel tank fuel line disconnect	1		
-48	3H2-16-31	HOSE (NA) (89372) (cut to fit)	1		
-49	AN737RM46	CLAMP	2		
-50	181-484118	PLUG, 200 gallon underwing fuel tank air line	1		
-51	3H2-8-15	HOSE (NA) (89372) (cut to fit)	1		
-52	AN737RM30	CLAMP	2		
-53	209-63011	BEAM ASSEMBLY, BL 105 adapter (see Armament)	1	ET	
	209-63513	BEAM ASSEMBLY, BL 105 adapter (see Armament)	1	FR	

NOTE: *1 Designates component parts of tank assemblies stamped No. 001-796
*2 Designates component parts of tank assemblies stamped No. 797-
*3 Designates component parts of tank assemblies stamped No. 001-967
*4 Designates component parts of tank assemblies stamped No. 968-

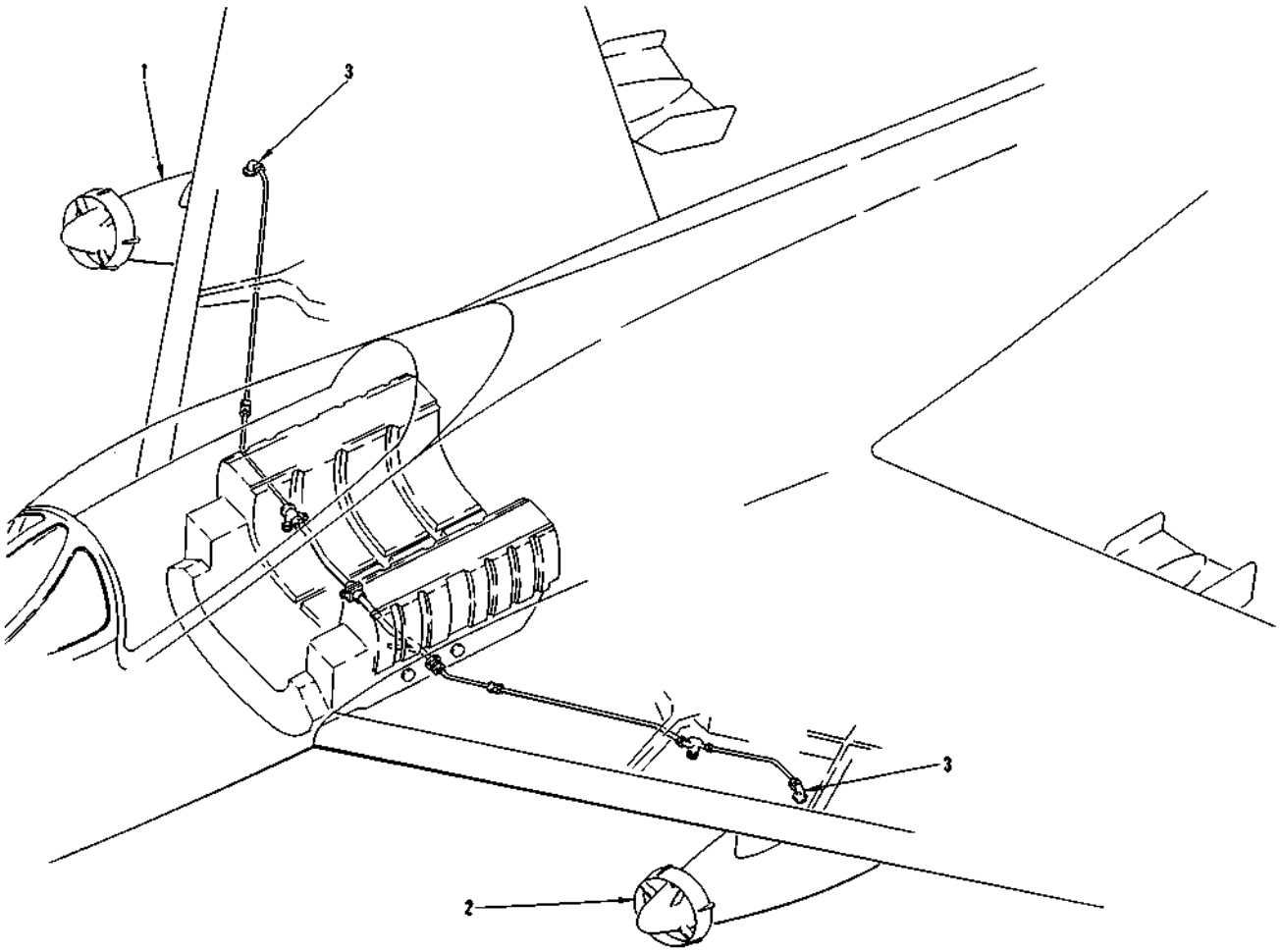

FIGURE 120 - BUDDY TANK REFUELING PACKAGE

FIGURE & INDEX NO.	PART NUMBER	1 2 3 4 5 6 7 NOMENCLATURE	UNITS PER ASSY.	USABLE ON CODE	S/C NO.
120	209-48901	PACKAGE, Buddy tanker complete (for breakdown see Technical Manual NA 03-100-504)	1	FR	529
	209-48901-11	PACKAGE, Buddy tanker complete (for additional breakdown see Technical Manual NA 03-100-504)	1		
	209-543142	. CONTROL BOX ASSEMBLY, Buddy tanker (for breakdown see Technical Manual NA 03-100-504)	1	FR	
-1	209-48910	. POD ASSEMBLY, Complete refueling (for breakdown see Technical Manual NA 03-100-504)	1	FR	529, 538
	209-48910-11	. POD ASSEMBLY, Complete refueling (for breakdown see Technical Manual NA 03-100-504)	1		
-2	209-48911	. TANK ASSEMBLY, 355 gallon tank (for breakdown see Technical Manual NA 03-100-504)	1	FR	529, 538
	209-48911-11	. TANK ASSEMBLY, 355 gallon tank (for breakdown see Technical Manual NA 03-100-504)	1		
	1500	. SHIPPING CONTAINER, Re-usable (HBB) (for breakdown see Technical Manual NA 03-100-504)	2	FR	
	E6408	. PIN, Buddy pod reel seal replacement rig assembly of (for breakdown see Technical Manual NA 03-100-504)	1	FR	
	E6409	. COVER, Buddy refueling system ram air assembly of (for breakdown see Technical Manual NA 03-100-504)	2	FR	529
	E-6409-101	. COVER, Buddy refueling system ram air assembly of (for breakdown see Technical Manual NA 03-100-504)	1		
	F-70785	. INDICATOR (RCO) (fuel quantity transfer) (for breakdown see Technical Manual NA 03-100-504)	1	FR	
	10500	. CLAMP (MAIV) (indicator mounting) (for breakdown see Technical Manual NA 03-100-504)	1	FR	
-3		TRANSFER SYSTEM, Applicable to aircraft coded (FR) (see figure 100)			

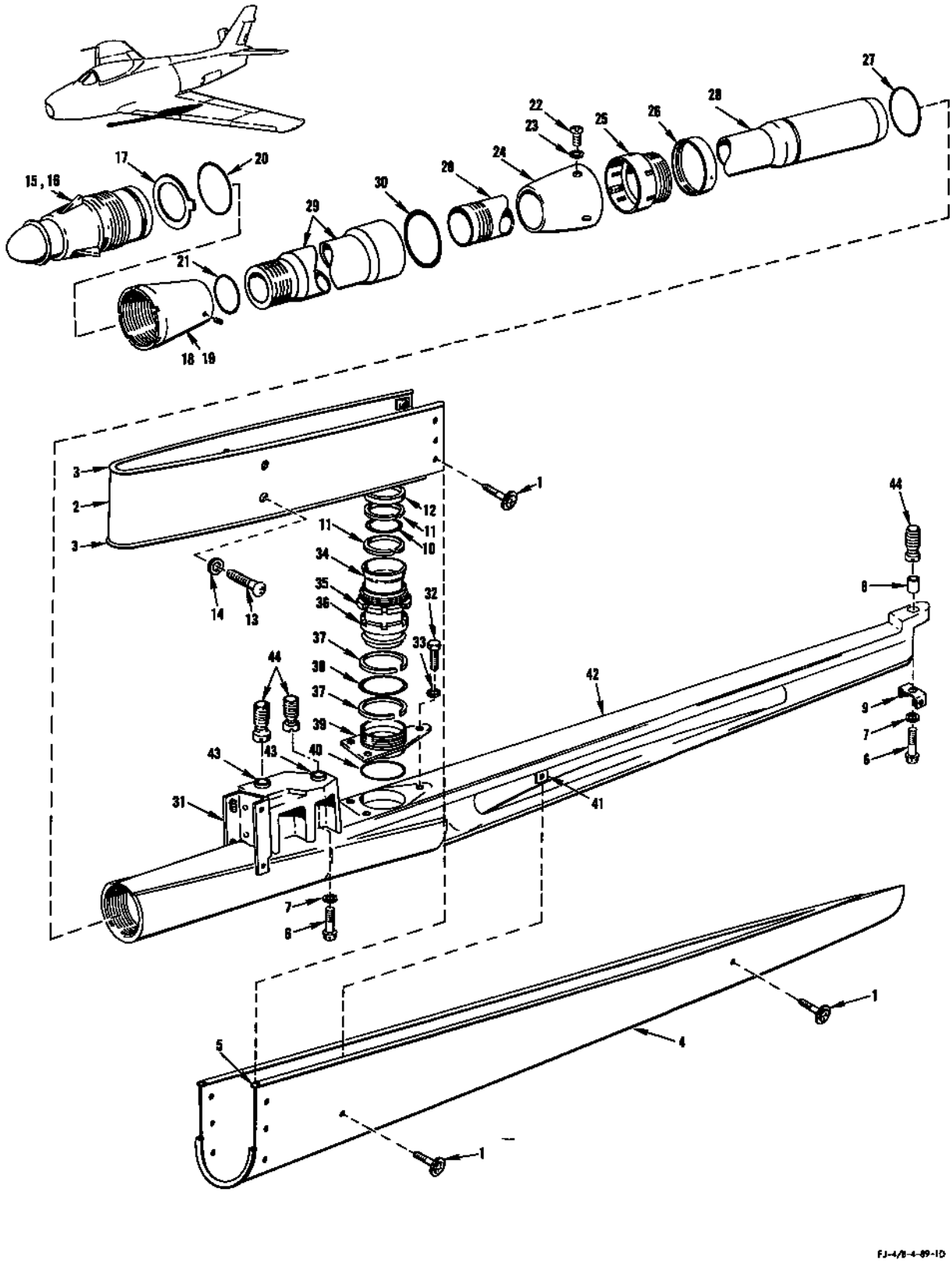

FIGURE 121 - INFLIGHT REFUELING PROBE - APPLICABLE TO AIRCRAFT CODED (B)

INFLIGHT REFUELING PROBE - APPLICABLE TO AIRCRAFT CODED (B)

FIGURE & INDEX NO.	PART NUMBER	1	2	3	4	5	6	7	NOMENCLATURE	UNITS PER ASSY.	USABLE ON CODE	S/C NO.
121	209-89853								PACKAGE, Inflight refueling probe	1	RD	513
	209-89853-10								PACKAGE, Inflight refueling probe	1	RD	513
	209-89853-20								PACKAGE, Inflight refueling probe	1	RE	513
	209-89853-30								PACKAGE, Inflight refueling probe	1	SD	513
-1	SP1561-032-8		.						SCREW ASSEMBLY (SH) (78189)	10	B	
-2	209-481105-31		.						FAIRING ASSEMBLY, Inflight refueling probe	1	B	
-3	5W1-3-34		.	.					WEATHERSEAL (NA) (89372)	2	B	
-4	209-481105-21		.						FAIRING ASSEMBLY, Inflight refueling probe	1	B	
-5	5W1-3-35		.	.					WEATHERSEAL (NA) (89372)	2	B	
-6	NAS145DH20		.						BOLT	3	B	
-7	2W10-5		.						WASHER, Countersunk (NA) (89372)	3	B	
-8	4B21S5-006		.						BUSHING, Spacer (NA) (89372)	1	B	
-9	209-481108		.						CLIP ASSEMBLY, Inflight refueling probe fairing aft	1	B	
-10	MS29513-329		.						PACKING	1	B	
-11	3601-32D-9		.						WASHER (WIG) (79326)	2	B	
-12	194-48206		.						SPACER, Inflight refueling probe to wing interconnector seal	1	B	
-13	AN520-10-10		.						SCREW	4	B	
-14	2W18-10		.						WASHER, Flat (NA) (89372)	8	B	
	209-481102		.						PROBE ASSEMBLY, Inflight refueling	1	RD	
	209-481102-11		.						PROBE ASSEMBLY, Inflight refueling (superseded by 209-481102-21 for future procurement)	1	RE	
	209-481102-21		.						PROBE ASSEMBLY, Inflight refueling (supersedes 209-481102-11 for future procurement)	1	RE	
-15	13A003M	*1	.	.					NOZZLE (Type MA-1) (FLRE) (81892) (for breakdown see Technical Manual NAVAER 03-100A-501)	1	MN	
-16	7-653-171-1	*2	.	.					NOZZLE (SZT) (82267) (for further breakdown see Technical Manual NA 10ABG-511)	1	B	
-17	MS24360		.	.	.				RING-LOCK, MA-2 Flight pressure refueling nozzle (supersedes USAF drawing 55B9063)	1	B	
-18	194-48227	*1	.	.					ADAPTER ASSEMBLY, Inflight refueling probe nozzle type MA-1	1	MN	
	194-48227-3		.	.	.				ADAPTER, Inflight refueling probe nozzle type MA-1	1	MN	
	194-48227-5		.	.	.				INSERT, Inflight refueling probe nozzle type MA-1	1	MN	
	194-48227-7		.	.	.				INSERT, Inflight refueling probe nozzle type MA-1	1	MN	
-19	194-48207-11	*2	.	.					ADAPTER ASSEMBLY, Inflight refueling probe nozzle	1	B	
	194-48207-3	*2	.	.	.				ADAPTER, Inflight refueling probe nozzle	1	B	
	194-48218	*2	.	.	.				INSERT, Inflight refueling probe nozzle adapter lock	3	B	
-20	MS29513-234		.	.					PACKING	1	B	
-21	MS29513-229		.	.					PACKING	1	B	
-22	AN520-10R8		.	.					SCREW	3	B	
-23	2W18-10M		.	.					WASHER, Flat (NA) (89372)	3	B	
-24	194-48221		.	.					FAIRING, Inflight refueling probe locknut	1	B	
-25	194-48209		.	.					NUT ASSEMBLY, Inflight refueling probe lock	1	B	
-26	194-48223		.	.					NUT, Inflight refueling probe jam	1	B	
-27	MS29513-236		.	.					PACKING	1	B	
-28	209-481104		.	.					PROBE, Inflight refueling	1	B	
-29	209-481122	*3	.	.	.				ADAPTER ASSEMBLY, Inflight refueling probe extension (added by Service Change No. 513)	1	B	
	209-481122-3	*3	.	.	.	.			ADAPTER, Inflight refueling probe extension	1	B	
	194-48218	*3	.	.	.	.			INSERT, Inflight refueling probe nozzle adapter lock	3	B	
-30	MS29513-229	*3	.	.	.				PACKING (added by Service Change No. 513)	1	B	
-31	209-481106-21		.	.					CLIP ASSEMBLY, Inflight refueling probe fairing	1	B	
-32	AN3H5A		.	.					BOLT	3	B	
-33	2W18-10M		.	.					WASHER, Flat (NA) (89372)	3	B	
	194-48204		.	.					TUBE ASSEMBLY, Inflight refueling probe to wing interconnector	1	B	
-34	194-48204-3		.	.	.				TUBE, Inflight refueling probe to wing interconnector tube assembly	1	B	
-35	194-48205		.	.	.				NUT, Inflight refueling probe to wing interconnector seal	1	B	
-36	3655-32D		.	.					COUPLING, Flexible half (WIG) (79326)	1	B	
-37	3601-32D-9		.	.	.				WASHER (WIG) (79326)	2	B	
-38	MS29513-329		.	.					PACKING	1	B	
-39	194-48219		.	.					FITTING, Inflight refueling probe interconnector	1	B	
-40	MS29513-229		.	.					PACKING	1		
-41	209-481107		.	.					CLIP ASSEMBLY, Inflight refueling probe fairing center	2	B	
	209-481103-11		.	.					SUPPORT ASSEMBLY, Inflight refueling probe	1	B	
-42	209-481103-3		.	.	.				SUPPORT, Inflight refueling probe support assembly	1	B	
-43	4B20M-S5-017		.	.	.				BUSHING, Press fit flanged (NA) (89372)	2	B	
	1191-3CNx-3/8		.	.	.				INSERT, Heli-coil (AF) (91767)	3	B	
-44	209-14329								PLUG, Inflight refueling probe attach (see Structures for next assembly)	3	B	

NOTE: *1 Component part of 209-89853 and 209-89853-30 package only
*2 Component part of 209-89853-10 and 209-89853-20 package only
*3 Use only on 209-481102-21 probe assemblies

NO. 1 FLIGHT CONTROL AND EMERGENCY SYSTEM - APPLICABLE TO AIRCRAFT CODED (ET)

FIGURE & INDEX NO.	PART NUMBER	1 2 3 4 5 6 7 NOMENCLATURE	UNITS PER ASSY.	USABLE ON CODE	S/C NO.
122-1	209-58650-11	HYDRAULIC EQUIPMENT ASSEMBLY, Pump variable volume engine driven	1	ET	
	ATTACHING	PARTS			
-2	AN4044-1	GASKET	1	ET	
-3	6087D4	NUT, Self locking high temperature (WAC) (66640)	4	ET	
-4	AN4044-1	GASKET	4	ET	
	---*---				
-5	AA-65306-R	. PUMP ASSEMBLY, Variable delivery (VI) (62983) (supersedes AA-60306-R (VI) (62983) for future procurement and interchangeable with AA-60306-RB(VI) (62983))	1	ET	
-6	AN837-4D	. ELBOW	1	ET	
	AN6289-4	. NUT	1	ET	
	AN6291-4	. RING	1	ET	
	AN6290-4	. GASKET	1	ET	
-7	AN833-6D	. ELBOW	1	ET	
	AN6289-6	. NUT	1	ET	
	AN6291-6	. RING	1	ET	
	AN6290-6	. GASKET	1	ET	
-8	AN6292-8-14-1/2	HOSE ASSEMBLY (pressure)	1	ET	
-9	209-58401-3	TAG, Hydraulic hose assembly identification (flight control system pressure No. 1)	1	ET	
-10	AN815D8	UNION	1	ET	
	AN6290-8	GASKET	1	ET	
	AN939D8	ELBOW	1	ET	
-11	150-S1-8	COUPLING HALF, Self-sealing (AQ) (00624)	1	ET	
	C155-25-8	NUT, Union (AQ) (00624)	1	ET	
-12	MS28741-6-0280	HOSE ASSEMBLY (case drain)	1	ET	
-13	209-58401-11	TAG, Hydraulic hose assembly identification (flight control system No. 1 case drain)	1	ET	
-14	150-S1-6	COUPLING HALF, Self-sealing (AQ) (00624)	1	ET	
	C155-25-8	NUT, Union (AQ) (00624)	1	ET	
-15	MS28741-12-0240	HOSE ASSEMBLY (suction)	1	ET	
-16	209-58401-15	TAG, Hydraulic hose assembly identification (flight control system No. 1 suction)	1	ET	
-17	150-S1-12	COUPLING HALF, Self-sealing (AQ) (00624)	1	ET	
	C155-25-12	NUT, Union (AQ) (00624)	1	ET	
-18		NO. 1 FLIGHT CONTROL EQUIPMENT AND EMERGENCY PUMP ASSEMBLY (see figure 124 for breakdown)			
-19	6520N45C6	SOCKET ASSEMBLY, Quick disconnect 3/8" self-sealing (WIG) (79326)	1	ET	
-20	150-S1-6	COUPLING HALF, Self-sealing (AQ) (00624)	1	ET	
	C155-25-8	NUT, Union (AQ) (00624)	1	ET	
-21	AN6292-6-18-1/2	HOSE ASSEMBLY (pressure)	1	ET	
-22	MS28741-6-0174	HOSE ASSEMBLY (return)	1	ET	
-23	MS21901D6	UNION	2	ET	
	AN924-6D	NUT	2	ET	
-24	209-58810-53	LINE ASSEMBLY, No. 1 flight control system pressure from fitting station 236.5 LH to union station 246.032 LH	1	ET	
-25	209-58810-59	LINE ASSEMBLY, No. 1 flight control system return from fitting fuselage station 236.5 LH to union station 246.032 LH	1	ET	
-26	MS21903-6	UNION	6	ET	445
	2W18-916	WASHER, Flat (NA) (89372)	6	ET	
	AN924-6	NUT	6	ET	
-27	209-58810-55	LINE ASSEMBLY, No. 1 flight control system pressure from union 246.032 LH to union station 286.5	1	ET	
-28	209-58810-61	LINE ASSEMBLY, No. 1 flight control system return from union station 246.032 LH to union station 286.5	1	ET	
-29	209-58810-57	LINE ASSEMBLY, No. 1 flight control system pressure from union station 286.5 to union station 331.5 LH	1	ET	
-30	209-58810-63	LINE ASSEMBLY, No. 1 flight control system return from union station 286.5 to union station 331.5 RH	1	ET	445
-31	209-58812-3	LINE ASSEMBLY, No. 1 flight control system pressure from union in bulkhead station 331.5 to elbow in filter	1	Y	445
	209-58812-21	LINE ASSEMBLY, No. 1 flight control system pressure from union in bulkhead station 331.5 to elbow in filter	1	FS	445
-32	209-58679	HYDRAULIC EQUIPMENT ASSEMBLY, No. 1 flight control system filter stabilizer	1	ET	
-33	MS21908-6	. ELBOW	1	ET	
	AN6289-6	. NUT	1	ET	
	AN6291-6	. RING	1	ET	
	AN6290-6	. GASKET	1	ET	
-34	MS28720-6	. FILTER (see figure 169 for breakdown)	1	ET	445
	AN6290-6	. GASKET	1	ET	
	MS21902-6	. UNION	1	ET	
-35	209-58812-5	LINE ASSEMBLY, No. 1 flight control system pressure from union in filter to elbow in deck station 365.125	1	Y	
	209-58812-23	LINE ASSEMBLY, No. 1 flight control system pressure from union in filter to elbow in deck station 365.125	1	FS	
-36	209-58812-9	LINE ASSEMBLY, No. 1 flight control system return from union in bulkhead station 331.5 to elbow in deck station 368.375	1	Y	445
	209-58812-25	LINE ASSEMBLY, No. 1 flight control system return from union station 331.5 to elbow in deck station 368.75	1	FS	445
-37	MS21908D6	ELBOW	2	ET	445
	2W18-916	WASHER, Flat (NA) (89372)	2	ET	
	AN924-6D	NUT	2	ET	

NO. 1 FLIGHT CONTROL AND EMERGENCY SYSTEM - APPLICABLE TO AIRCRAFT CODED (ET)

FIGURE & INDEX NO.	PART NUMBER	1 2 3 4 5 6 7 NOMENCLATURE	UNITS PER ASSY.	USABLE ON CODE	S/C NO.
122-38	209-58812-7	LINE ASSEMBLY, No. 1 flight control system pressure from elbow to deck fuselage station 365.125 to check valve station 375.125 LH	1	ET	445
-39	209-58812-11	LINE ASSEMBLY, No. 1 flight control system return from elbow in deck to union station 375.125	1	ET	445
-40	MS21916D-4	REDUCER	1	ET	
-41	AN6290-4	GASKET	3	ET	
-42	AN6280-4	VALVE	1	ET	
-43	AN832-4D	UNION	1	ET	
-44	AN924-4D	NUT	1	ET	
-45	AN894D6-4	BUSHING	1	ET	
-46	MS21903D6	UNION	1	ET	
-47	AN924-6D	NUT	1	ET	
-48	3H3-4-0324	HOSE ASSEMBLY, Plastic covered (NA) (89372) (pressure) (make from MS28741-4-0324)	1	ET	
-49	3H3-4-0240	HOSE ASSEMBLY, Plastic covered (NA) (89372) (return) (make from MS28741-4-0240)	1	ET	
-50	209-58706	ACTUATOR ASSEMBLY, Hydraulic flight control stabilizer (see figure 131 for breakdown)	1	ET	
-51	209-52237	SECTOR, Horizontal stabilizer control rear fuselage (see Surface and Secondary Controls)	1	ET	
-52	209-58795	BOLT, Hydraulic power control cylinder rod end	2	ET	
	2W18-1216M	WASHER, Flat (NA) (89372) (under head of bolt)	2	ET	
	209-58789	WASHER, Hydraulic flight control stabilizer rod end (under nut)	2	ET	
	AN320-8	NUT	2	ET	
-53	MS21903D6	UNION	1	ET	
	AN924-6D	NUT	1	ET	
-54	209-58821-33	LINE ASSEMBLY, Flight control reservoir overflow vent from union station 201 LH to union station 195	1	ET	
-55	AN924-6D	NUT	1	ET	
-56	2W18-916	WASHER, Flat (NA) (89372)	1	ET	
-57	MS21903D6	UNION	1	ET	
-58	AN6290-6	GASKET	3	ET	
-59	AN938D6	TEE	1	ET	
-60	AN6291-6	RING	2	ET	
-61	AN6289-6	NUT	2	ET	
-62	MS21907D8	ELBOW	1	ET	
-63	MS21908D6	ELBOW	1	ET	
-64	209-58821-11	LINE ASSEMBLY, No. 1 flight control system pressure from elbow station 134.5 to tee station 182.5 RH	1	ET	
-65	209-58821-13	LINE ASSEMBLY, No. 1 flight control system return from elbow station 184.5 to tee station 182.5	1	ET	
-66	MS21905D6	TEE	2	ET	
-67	209-58821-9	LINE ASSEMBLY, No. 1 flight control system pressure from elbow fuselage station 176.5 to tee station 182.5 RH	1	ET	
-68	209-58821-3	LINE ASSEMBLY, No. 1 flight control system return from elbow station 177 to tee station 182.5 RH	1	ET	
-69	209-58821-7	LINE ASSEMBLY, No. 1 flight control system pressure from elbow station 176.5 to tee station 182.5 LH	1	ET	
-70	209-58821-5	LINE ASSEMBLY, No. 1 flight control system return from elbow station 177 to tee station 182.5 RH	1	ET	
-71	209-58824-29	LINE ASSEMBLY, No. 1 flight control reservoir drain from tee fuselage station 187 to overboard drain station 197	1	ET	
-72	MS21902D6	UNION	1	ET	
-73	MS21908D6	ELBOW	4	ET	
	AN924-6D	NUT	4	ET	
-74	209-58824-15	LINE ASSEMBLY, No. 1 flight control pressure from union fuselage station 45 to elbow in bulkhead station 178 LH	1	W	
	209-58824-73	LINE ASSEMBLY, No. 1 flight control pressure from union fuselage station 45 to elbow in bulkhead station 178 LH	1	KQ	
-75	209-58824-17	LINE ASSEMBLY, No. 1 flight control system pressure from union at fuselage station 45 to elbow in bulkhead station 178 RH	1	W	
	209-58824-75	LINE ASSEMBLY, No. 1 flight control system pressure from union at fuselage station 45 to elbow in bulkhead station 178 RH	1	KQ	
-76	209-58824-11	LINE ASSEMBLY, No. 1 flight control system return from union at fuselage station 45 to elbow in bulkhead station 178 RH	1	W	
	209-58824-77	LINE ASSEMBLY, No. 1 flight control system return from union at fuselage station 45 to elbow in bulkhead station 178 LH	1	KQ	
-77	209-58824-13	LINE ASSEMBLY, No. 1 flight control system return from union fuselage station 45 to elbow in bulkhead station 178 RH	1	W	
	209-58824-79	LINE ASSEMBLY, No. 1 flight control system return from union fuselage station 45 to elbow in bulkhead station 178 RH	1	KQ	
-78	MS21902D6	UNION	4	ET	
-79	209-58296-1	DRAIN ASSEMBLY, Hydraulic fluid overboard	1	DE	
	209-58296-101	DRAIN ASSEMBLY, Hydraulic fluid overboard	1	HY	
-80	209-58817-7	LINE ASSEMBLY, No. 1 flight control system pressure from union fuselage station 45 to union station 185 LH	1	ET	
-81	209-58817-9	LINE ASSEMBLY, No. 1 flight control system pressure from union fuselage station 45 to union station 185 RH	1	ET	
-82	209-58817-11	LINE ASSEMBLY, No. 1 flight control return from union fuselage station 45 to union station 185 LH	1	ET	
-83	209-58817-13	LINE ASSEMBLY, No. 1 flight control return from union fuselage station 45 to union station 185 RH	1	ET	
-84	MS21916D6-4	REDUCER	4	ET	

NO. 1 FLIGHT CONTROL AND EMERGENCY SYSTEM - APPLICABLE TO AIRCRAFT CODED (ET)

FIGURE & INDEX NO.	PART NUMBER	1 2 3 4 5 6 7 NOMENCLATURE	UNITS PER ASSY.	USABLE ON CODE	S/C NO.
122-85	209-58814-3	LINE ASSEMBLY, No. 1 flight control system pressure from union at front spar (rear spar station 134) to elbow at aft intermediate spar LH	4	ET	
-86	209-58844-59	LINE ASSEMBLY, No. 1 flight control system pressure from union at front spar thru tunnel assembly to elbow in aileron well RH	1	ET	
-87	209-58814-7	LINE ASSEMBLY, No. 1 flight control system return from union at front spar (rear spar station 132) to elbow at aft intermediate spar LH	1	ET	
-88	209-58844-61	LINE ASSEMBLY, No. 1 flight control system return from union at front spar thru tunnel assembly to elbow in aileron well RH	1	ET	
-89	MS21907D4	ELBOW	4	ET	
-90	209-58844-43	LINE ASSEMBLY, No. 1 flight control system pressure from elbow at tunnel assembly to check valve in manifold LH	1	ET	
-91	209-58844-45	LINE ASSEMBLY, No. 1 flight control system pressure from elbow at tunnel assembly to check valve in manifold RH	1	ET	
-92	209-58844-47	LINE ASSEMBLY, No. 1 flight control system return from elbow at tunnel assembly to union in manifold LH	1	ET	
-93	209-58844-49	LINE ASSEMBLY, No. 1 flight control system return from elbow at tunnel assembly to union in manifold RH	1	ET	
-94	209-58739	SUPPORT ASSEMBLY, Hydraulic aileron flight control manifold (see figure 133 for complete breakdown)	1	ET	
-95	3H3-4-0224	HOSE ASSEMBLY, Plastic covered (NA) (89372) (No. 1 system pressure) (make from MS28741-4-0224)	2	ET	
-96	3H3-4-0224	HOSE ASSEMBLY, Plastic covered (NA) (89372) (No. 1 system return) (make from MS28741-4-0224)	2	ET	
-97	209-58708	BOLT, Hydraulic aileron flight control rod end	2	ET	
	2W18-1416	WASHER, Flat (NA) (89372)	2	ET	
	2W1-57-48-125	WASHER, Plain (NA) (89372)	2	ET	
	AN310-12	NUT	2	ET	
-98	209-58705	ACTUATOR ASSEMBLY, Hydraulic aileron flight control (see figure 128 for complete breakdown)	1	ET	
-99	209-58729-11	BOLT, Hydraulic aileron flight control fitting	2	ET	
	2W18-516	WASHER, Flat (NA) (89372)	2	ET	
	AN365-524	NUT	2	ET	
-100	209-58736	LINK ASSEMBLY, Hydraulic aileron flight control valve aft (see Surface and Secondary Controls)	2	ET	
-101	209-58253	SUPPORT, Hydraulic line, wing rear spar inboard	2	DC	
-102	209-58251	SUPPORT, Hydraulic line, wing rear spar outboard	10	DC	
-103	209-58339-3	BLOCK, Hydraulic line, wing rear spar inboard	2	JW	
-104	209-58339-5	BLOCK, Hydraulic line, wing rear spar inboard	2	JW	
-105	209-58340-1	BLOCK, Hydraulic line, wing rear spar canted LH	1	JW	
-106	209-58340-2	BLOCK, Hydraulic line, wing rear spar canted RH	1	JW	

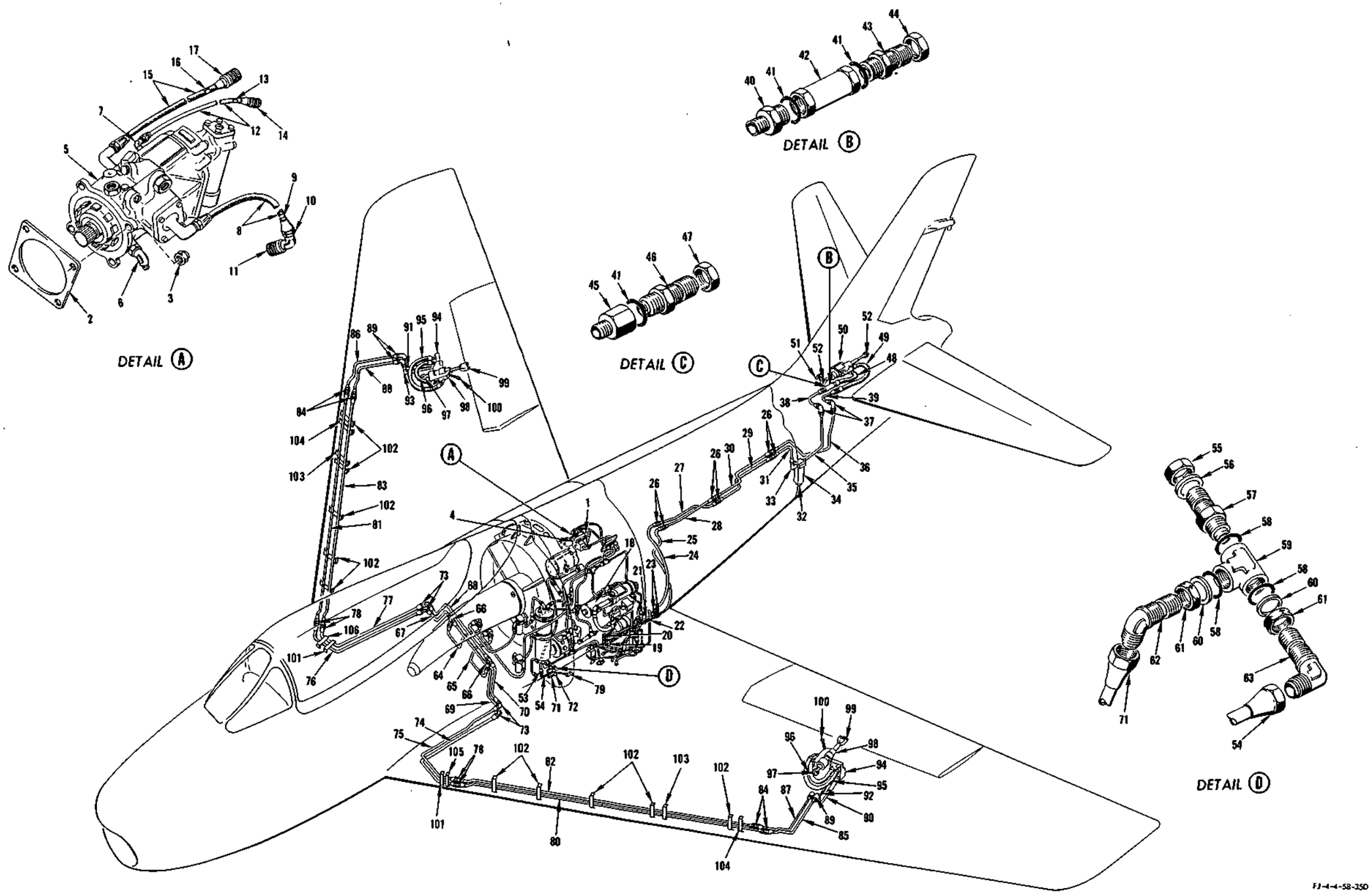

FIGURE 122 - NO. 1 FLIGHT CONTROL AND EMERGENCY SYSTEM - APPLICABLE TO AIRCRAFT CODED (ET)

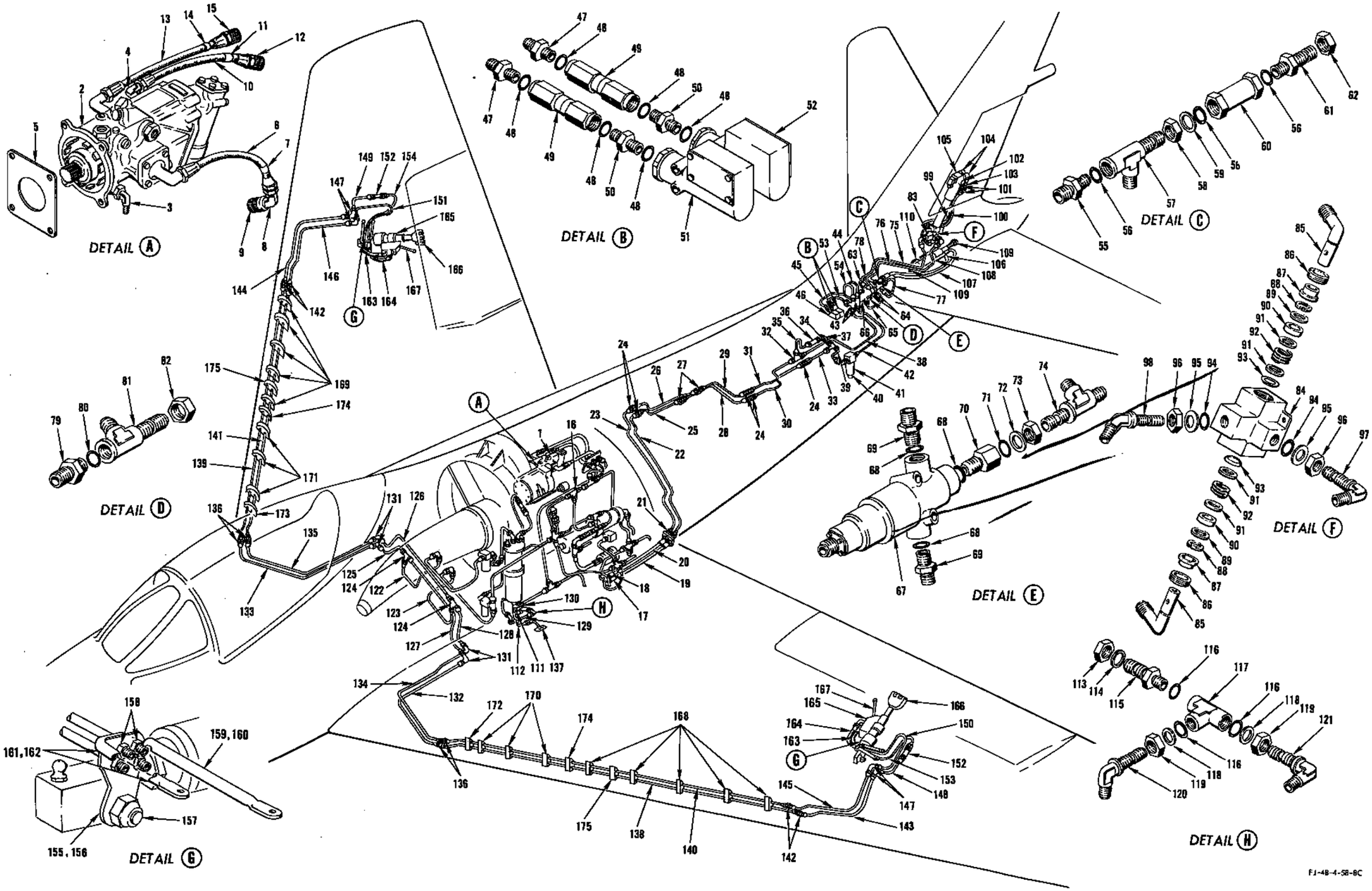

FIGURE 123 - NO. 1 FLIGHT CONTROL AND RUDDER BOOST SYSTEM - APPLICABLE TO AIRCRAFT CODED (FR)

NO. 1 FLIGHT CONTROL AND RUDDER BOOST SYSTEM - APPLICABLE TO AIRCRAFT CODED (FR)

FIGURE & INDEX NO.	PART NUMBER	1 2 3 4 5 6 7 NOMENCLATURE	UNITS PER ASSY.	USABLE ON CODE	S/C NO.
123-1	209-48650-11	HYDRAULIC EQUIPMENT ASSEMBLY, Pump variable volume engine driven	1	FR	
	ATTACHING PARTS				
	6087D4	NUT, Self-locking high temperature (Wright Aeronautical Corp) (66640)	4	FR	
	AN122584	WASHER	4	FR	
	---*---				
-2	AA-65306-R	. PUMP ASSEMBLY, Variable delivery (VI) (62983) (supersedes AA-60306-R - (VI) (62983) for future procurement) (interchangeable with AA-60306-RB (VI) (62983))	1	FR	
-3	AN837-4D	. ELBOW	1	FR	
	AN6289-4	. NUT	1	FR	
	AN6291-4	. RING	1	FR	
	AN6290-4	. GASKET	1	FR	
-4	AN833-6D	. ELBOW	1	FR	
	AN6289-6	. NUT	1	FR	
	AN6291-6	. RING	1	FR	
	AN6290-6	. GASKET	1	FR	
-5	AN4044-1	GASKET	1	FR	
-6	AN6292-8-14-1/2	HOSE ASSEMBLY (pressure)	1	FR	
-7	209-58401-3	TAG, Hydraulic hose assembly identification (flight control system pressure)	1	FR	
-8	AN815D8	UNION	1	FR	
	AN6290-8	GASKET	1	FR	
	AN939D8	ELBOW	1	FR	
-9	150-S1-8	COUPLING HALF, Self-sealing (AQ) (00624)	1	FR	
	C155-25-8	NUT, Union (AQ) (00624)	1	FR	
-10	MS28741-6-0290	HOSE ASSEMBLY (case drain)	1	FR	
-11	209-58401-11	TAG, Hydraulic hose assembly identification (flight control system No. 1 case drain)	1	FR	
-12	150-S1-6	COUPLING HALF, Self-sealing (AQ) (00624)	1	FR	
	C155-25-8	NUT, Union (AQ) (00624)	1	FR	
-13	MS28741-12-0240	HOSE ASSEMBLY (suction)	1	FR	
-14	209-58401-15	TAG, Hydraulic hose assembly identification (flight control system No. 1 suction)	1	FR	
-15	150-S1-12	COUPLING HALF, Self-sealing (AQ) (00624)	1	FR	
	C155-25-12	NUT, Union (AQ) (00624)	1	FR	
-16		NO. 1 FLIGHT CONTROL EQUIPMENT AND EMERGENCY PUMP ASSEMBLY (see figure 124 for breakdown)			
-17	6520N45C6	SOCKET ASSEMBLY, Quick disconnect 3/8-inch self-sealing (WIG) (79326) (supersedes 6520D6 (WIG) (79326) for future procurement)	1	FR	
-18	150-S1-6	COUPLING HALF, Self-sealing (AQ) (00624)	1	FR	
	C155-25-8	NUT, Union (AQ) (00624)	1	FR	
-19	AN6292-6-18-1/2	HOSE ASSEMBLY (pressure)	1	FR	
-20	MS28741-6-0174	HOSE ASSEMBLY (return)	1	FR	
-21	MS21901D6	UNION	2	FR	
	AN924-6D	NUT	2	FR	
-22	209-58822-9	LINE ASSEMBLY, No. 1 flight control system pressure from fitting station 236.5 LH to union station 240.032	1	FR	
-23	209-58822-3	LINE ASSEMBLY, No. 1 flight control system return from fitting station 236.5 LH to union station 246.032	1	FR	
-24	MS21903-6	UNION	5	FR	
	2W18-916	WASHER, Flat (NA) (89372)	5	FR	
	AN924-6	NUT	5	FR	
-25	209-58822-11	LINE ASSEMBLY, No. 1 flight control system pressure from union station 246.032 LH to union station 271.5 LH	1	FR	
-26	209-58822-5	LINE ASSEMBLY, No. 1 flight control system return from union station 246.032 LH to union station 274.5 LH	1	FR	
-27	MS21902-6	UNION	2	FR	
-28	209-58822-13	LINE ASSEMBLY, No. 1 flight control system pressure from union station 271.5 LH to union station 286.5	1	FR	
-29	209-58822-7	LINE ASSEMBLY, No. 1 flight control system return from union station 274.5 LH to union station 286.5 LH	1	FR	
-30	209-58810-57	LINE ASSEMBLY, No. 1 flight control system pressure from union station 286.5 LH to union station 331.5 LH	1	FR	
-31	209-58822-65	LINE ASSEMBLY, No. 1 flight control system return from union station 286.5 to bulkhead tee station 331.5 LH	1	FR	
-32	MS21912-6	TEE	1	FR	
	2W18-916M	WASHER, Flat (NA) (89372)	1	FR	
	AN924-6D	NUT	1	FR	
-33	209-58820-65	LINE ASSEMBLY, No. 1 flight control system pressure from bulkhead union fuselage station 331.5 to tee in filter station 346	1	FR	
-34	MS21905-6	TEE	2	FR	
-35	209-58820-67	LINE ASSEMBLY, No. 1 flight control system return from tee in bulkhead station 331 to check valve station 338.5	1	FR	
-36	AN6280-6	VALVE	1	FR	
	MS21902-6	UNION	2	FR	
	AN6290-6	GASKET	2	FR	
-37	209-58820-69	LINE ASSEMBLY, No. 1 flight control system return from check valve station 338.5 to tee in pressure line station 347	1	FR	
-38	209-58820-29	LINE ASSEMBLY, No. 1 flight control system return from bulkhead tee fuselage - station 364.5 LH to bulkhead tee fuselage station 331.5	1	FR	
-39	209-58820-71	LINE ASSEMBLY, No. 1 flight control system pressure from tee station 347 to elbow in filter	1	FR	
-40	209-58679-11	HYDRAULIC EQUIPMENT ASSEMBLY, Stabilizer No. 1 flight control system filter	1	FR	

NO. 1 FLIGHT CONTROL AND RUDDER BOOST SYSTEM - APPLICABLE TO AIRCRAFT CODED (FR)

FIGURE & INDEX NO.	PART NUMBER	1 2 3 4 5 6 7 NOMENCLATURE	UNITS PER ASSY.	USABLE ON CODE	S/C NO.
123		ATTACHING PARTS			
	AN4-23A	BOLT	2	FR	
	2W18-416	WASHER, Flat (NA) (89372)	2	FR	
	NAS43DD4-20	SPACER	2	FR	
		---*---			
-41	MS28720-6	. FILTER	1	FR	
	MS21908-6	. ELBOW	1	FR	
	MS21902-6	. UNION	1	FR	
	AN6290-6	. GASKET	2	FR	
	AN6291-6	. RING	2	FR	
	AN6289-6	. NUT	2	FR	
-42	209-58820-19	LINE ASSEMBLY, No. 1 flight control system pressure from filter fuselage station 350 LH to tee fuselage station 364.75 LH	1	FR	
-43	MS21912-6	TEE	2	FR	
	2W18-916	WASHER, Flat (NA) (89372)	4	FR	
	AN924-6D	NUT	2	FR	
-44	209-58820-15	LINE ASSEMBLY, No. 1 flight control system pressure from tee fuselage station 364.75 LH to check valve fuselage station 375.125 LH	1	FR	
-45	209-58820-25	LINE ASSEMBLY, No. 1 flight control system pressure from bulkhead tee fuselage station 364.5 LH to pressure switch fuselage station 359	1	FR	
-46	209-58664-3	HYDRAULIC EQUIPMENT ASSEMBLY, Pressure switch flight control	1	FR	
	209-58664-5	HYDRAULIC EQUIPMENT ASSEMBLY, Pressure switch flight control	1	FR	
		ATTACHING PARTS			
	AN3-33A	BOLT	1	FR	
	2W18-10M	WASHER, Flat (NA) (89372)	1	FR	
		---*---			
-47	MS21916D6-4	. REDUCER	1	FR	
-48	AN6290-4	. GASKET	3	FR	
-49	18D-2	. SNUBBER, Pressure (OPS) (76906)	1	FR	
-50	MS21902D4	. UNION	1	FR	
-51	90000-2	. SWITCH, Hydraulic pressure (HYRM) (81873) (interchangeable with 4000-24 (Frebank Co) (98087) or 106130 (LADM) (91864))	1	FR	
-52	90000-12	. SWITCH, Hydraulic pressure (HYRM) (81873) (interchangeable with 2170-2 (Frebank Co) (98087) or 106130-9 (LADM) (91864)	1	FR	
-53	209-58820-27	LINE ASSEMBLY, No. 1 flight control system return from bulkhead tee fuselage station 363 LH to pressure switch fuselage station 357.5	1	FR	
-54	209-58820-17	LINE ASSEMBLY, No. 1 flight control system return from bulkhead union station 375.125 LH to tee fuselage station 368.25 LH	1	FR	
-55	MS21916D6-4	REDUCER	1	FR	
-56	AN6290-4	GASKET	3	FR	
-57	MS21911-4	TEE	1	FR	
-58	AN6289-4	NUT	1	FR	
-59	AN6291-4	RING	1	FR	
-60	AN6280-4	VALVE	1	FR	
-61	AN832-4D	UNION	1	FR	
-62	AN924-4D	NUT	1	FR	
-63	209-58820-21	LINE ASSEMBLY, No. 1 flight control system pressure from union in check valve fuselage station 371 LH to tee in check valve station 369.25	1	FR	
-64	AN6280-4	VALVE	2	FR	
	AN6290-4	GASKET	4	FR	
	MS21902D4	UNION	4	FR	
-65	209-58820-49	LINE ASSEMBLY, No. 1 flight control system pressure from union in check valve fuselage station 371 LH	1	FR	
-66	209-58665	HYDRAULIC EQUIPMENT ASSEMBLY, Valve hydraulic rudder boost control	1	FR	
		ATTACHING PARTS			
	AN3-22A	BOLT	2	FR	
	2W18-10M	WASHER, Flat (NA) (89372)	4	FR	
	AN365-1032	NUT	2	FR	
		---*---			
-67	25036	. VALVE, Solenoid 2-position 3-way 3000 psi (AP) (00502)	1	FR	
-68	AN6290-6	. GASKET	3	FR	
-69	MS21916D6-4	. REDUCER	2	FR	
-70	AN893-2D	. BUSHING	1	FR	
-71	AN6290-4	. GASKET	1	FR	
-72	AN6291-4	. RING	1	FR	
-73	AN6289-4	. NUT	1	FR	
-74	MS21912D4	. TEE	1	FR	
-75	209-58820-3	LINE ASSEMBLY, No. 1 flight control system pressure from tee fuselage station 364.75 LH to swivel assembly fuselage station 375.5	1	FR	
-76	209-58820-9	LINE ASSEMBLY, No. 1 flight control system return from swivel assembly fuselage station 375.5 to tee fuselage station 368.25 LH	1	FR	
-77	209-58820-47	LINE ASSEMBLY, No. 1 flight control system return from tee in solenoid valve-- fuselage station 370 LH to union in check valve fuselage station 373 LH	1	FR	
-78	209-58820-23	LINE ASSEMBLY, No. 1 flight control system return from union in check valve-- fuselage station 374 LH to bulkhead tee station 375	1	FR	
-79	MS21916D6-4	REDUCER	1	FR	
-80	AN6290-4	GASKET	1	FR	
-81	MS21911D4	TEE	1	FR	
-82	AN924-4D	NUT	1	FR	
-83	209-58611	HYDRAULIC EQUIPMENT ASSEMBLY, Swivel rudder boost	1	FR	
		ATTACHING PARTS			
	AN3-5A	BOLT	2	FR	
	2W18-10M	WASHER, Flat (NA) (89372)	4	FR	

NO. 1 FLIGHT CONTROL AND RUDDER BOOST SYSTEM - APPLICABLE TO AIRCRAFT CODED (FR)

FIGURE & INDEX NO.	PART NUMBER	1 2 3 4 5 6 7 NOMENCLATURE	UNITS PER ASSY.	USABLE ON CODE	S/C NO.
123	AN365-1032	NUT	2	FR	
		---*---			
-84	6900	. JOINT ASSEMBLY, Hydraulic swivel 3000 psi (Benton Corp) (98656)	1	FR	
-85	6902	. . FITTING ASSEMBLY (Benton Corp) (98656)	2	FR	
	6903	. . . FITTING (Benton Corp) (98656)	1	FR	
	2504	. . . PLUG (Benton Corp) (98656)	1	FR	
-86	6906	. . RETAINER (Benton Corp) (98656)	2	FR	
-87	6907	. . ADAPTER (Benton Corp) (98656)	2	FR	
-88	6905	. . RING, Split (Benton Corp) (98656)	2	FR	
-89	6904	. . WASHER (Benton Corp) (98656)	2	FR	
-90	2509	. . SEAL (Benton Corp) (98656)	2	FR	
-91	2511	. . WASHER (Benton Corp) (98656)	4	FR	
-92	2512	. . SPRING (Benton Corp) (98656)	2	FR	
-93	2508	. . SEAL (Benton Corp) (98656)	4	FR	
-94	AN6290-4	. GASKET	2	FR	
-95	AN6291-4	. RING	2	FR	
-96	AN6289-4	. NUT	2	FR	
-97	MS21908D4	. ELBOW	1	FR	
-98	MS21907D4	. ELBOW	1	FR	
-99	209-58820-5	LINE ASSEMBLY, No. 1 flight control system pressure from swivel assembly -- fuselage station 375.5 to union rudder station 39.5	1	FR	
-100	209-58820-11	LINE ASSEMBLY, No. 1 flight control system return from union rudder station -- 39.5 to swivel fuselage station 375.5	1	FR	
-101	MS21902-4	UNION	2	FR	
-102	209-58820-7	LINE ASSEMBLY, No. 1 flight control system pressure from union rudder ------ station 39.5 to rudder boost servo	1	FR	
-103	209-58820-13	LINE ASSEMBLY, No. 1 flight control system return from rudder boost servo to union rudder station 39.5	1	FR	
-104	MS21908D4	ELBOW	2	FR	
	AN6290-4	GASKET	2	FR	
	AN6291-4	RING	2	FR	
	AN6289-4	NUT	2	FR	
-105	476-2	SERVO UNIT, Rotary rudder (Gray and Huleguard, Inc) (99447)	1	FR	491
-106	3H3-4-0324	HOSE ASSEMBLY, Plastic covered (NA) (89372) (make from MS28741-4-0324) -- (No. 1 flight control pressure)	1	FR	
-107	MS28751-4-0240	HOSE ASSEMBLY (No. 1 flight control return)	1	FR	
-108	209-58706	ACTUATOR ASSEMBLY, Hydraulic flight control stabilizer (see figure 131 for -- breakdown)	1	FR	
-109	209-58795	BOLT, Hydraulic power control cylinder rod end	2	FR	
	2W18-1216M	WASHER, Flat (NA) (89372) (use under bolthead)	2	FR	
	209-58789	WASHER, Hydraulic flight control stabilizer rod end (use under nut)	2	FR	
	AN320-8	NUT	2	FR	
-110	209-524171	TRANSDUCER ASSEMBLY, Rudder pedal force (see Surface and Secondary ---- Controls)	1	FR	
-111	MS21903D6	UNION	1	FR	
	AN924-6D	NUT	1	FR	
-112	209-58821-33	LINE ASSEMBLY, Flight control reservoir overflow vent from union station 201 - LH to union station 195	1	FR	
-113	AN924-6D	NUT	1	FR	
-114	2W18-916	WASHER, Flat (NA) (89372)	1	FR	
-115	MS21903D6	UNION	1	FR	
-116	AN6290-6	GASKET	3	FR	
-117	AN938D6	TEE	1	FR	
-118	AN6291-6	RING	2	FR	
-119	AN6289-6	NUT	2	FR	
-120	MS21907D6	ELBOW	1	FR	
-121	MS21908D6	ELBOW	1	FR	
-122	209-58821-11	LINE ASSEMBLY, No. 1 flight control system pressure from elbow station ------ 184.5 to tee station 182.5 RH	1	FR	
-123	209-58821-37	LINE ASSEMBLY, No. 1 flight control system return from elbow station 184.5 -- to tee station 182.5 LH	1	FR	
-124	MS21905D6	TEE	2	FR	
-125	209-58821-9	LINE ASSEMBLY, No. 1 flight control system pressure from elbow fuselage ---- station 176.5 to tee station 182.5 RH	1	FR	
-126	209-58821-3	LINE ASSEMBLY, No. 1 flight control system return from elbow station 177 to -- tee station 182.5 RH	1	FR	
-127	209-58821-7	LINE ASSEMBLY, No. 1 flight control system pressure from elbow station ------ 176.5 to tee station 182.5 LH	1	FR	
-128	209-58821-5	LINE ASSEMBLY, No. 1 flight control system return from elbow station -------- 177 to tee station 182.5 RH	1	FR	
-129	209-58824-29	LINE ASSEMBLY, No. 1 flight control reservoir drain from tee fuselage station - 197 to overboard drain station 197	1	FR	
-130	MS21902D6	UNION	1	FR	
-131	MS21908D6	ELBOW	4	FR	
	AN924-6D	NUT	4	FR	
-132	209-58824-73	LINE ASSEMBLY, No. 1 flight control pressure from union fuselage station 45 to elbow in bulkhead station 178 LH	1	FR	
-133	209-58824-75	LINE ASSEMBLY, No. 1 flight control system pressure from union at fuselage -- station 45 to elbow in bulkhead station 178 RH	1	FR	
-134	209-58824-77	LINE ASSEMBLY, No. 1 flight control system return from union at fuselage ---- station 45 to elbow in bulkhead station 178 LH	1	FR	
-135	209-58824-79	LINE ASSEMBLY, No. 1 flight control system return from union fuselage ------ station 178 RH	1	FR	

NO. 1 FLIGHT CONTROL AND RUDDER BOOST SYSTEM - APPLICABLE TO AIRCRAFT CODED (FR)

FIGURE & INDEX NO.	PART NUMBER	1 2 3 4 5 6 7 NOMENCLATURE	UNITS PER ASSY.	USABLE ON CODE	S/C NO.
123-136	MS21902D6	UNION	4	FR	
-137	209-58296-101	DRAIN ASSEMBLY, Hydraulic fluid overboard	1	FR	
-138	209-58817-7	LINE ASSEMBLY, No. 1 flight control system pressure from union fuselage station 45 to union station 185 LH	1	FR	
-139	209-58817-9	LINE ASSEMBLY, No. 1 flight control system pressure from union fuselage station 45 to union station 185 RH	1	FR	
-140	209-58817-11	LINE ASSEMBLY, No. 1 flight control return from union fuselage station 45 to union station 185 LH	1	FR	
-141	209-58817-13	LINE ASSEMBLY, No. 1 flight control return from union fuselage station 45 to union station 185 RH	1	FR	
-142	MS21916D6-4	REDUCER	4	FR	
-143	209-58864-43	LINE ASSEMBLY, No. 1 flight control system pressure from union on front spar thru tunnel assembly to elbow in aileron well LH	1	FR	
-144	209-58864-45	LINE ASSEMBLY, No. 1 flight control system pressure from union on front spar thru tunnel assembly to elbow in aileron well RH	1	FR	
-145	209-58864-19	LINE ASSEMBLY, No. 1 flight control system return from union on front spar thru tunnel to elbow in aileron well LH	1	FR	
-146	209-58864-21	LINE ASSEMBLY, No. 1 flight control system return from union on front spar thru tunnel to elbow in aileron well RH	1	FR	
-147	MS21904-4D	ELBOW	4	FR	
-148	209-58864-35	LINE ASSEMBLY, No. 1 flight control system pressure from elbow at tunnel assembly to check valve (on floor) LH	1	FR	
-149	209-58864-37	LINE ASSEMBLY, No. 1 flight control system pressure from elbow at tunnel assembly to check valve (on floor) RH	1	FR	
-150	209-58864-55	LINE ASSEMBLY, No. 1 flight control system return from elbow at tunnel assembly to adapter at flex hose bracket LH	1	FR	
-151	209-58864-57	LINE ASSEMBLY, No. 1 flight control system return from elbow at tunnel assembly to adapter at flex hose bracket RH	1	FR	
-152	AN6280-4	VALVE	2	FR	
	MS21902D4	UNION	4	FR	
	AN6290-4	GASKET	4	FR	
-153	209-58864-39	LINE ASSEMBLY, No. 1 flight control system pressure from check valve on floor to adapter on flex hose bracket LH	1	FR	
-154	209-58864-41	LINE ASSEMBLY, No. 1 flight control system pressure from check valve on floor to adapter on flex hose bracket RH	1	FR	
-155	209-58797-3	BRACKET, Aileron actuator flex hose support LH	1	FR	
-156	209-58797-4	BRACKET, Aileron actuator flex hose support RH	1	FR	
-157	209-58708	BOLT, Hydraulic aileron flight control rod end	1	FR	
	2W1AL57-48-125	WASHER, Plain (NA) (89372)	1	FR	
	AN310-12	NUT	1	FR	
-158	MS21901-4D	ADAPTER	4	FR	
	2W18-716M	WASHER, Flat (NA) (89372)	4	FR	
	AN924-4	NUT	4	FR	
-159	209-523161-1	BRACE ASSEMBLY, Aileron control hose support bracket aft LH	1	FR	
-160	209-523161-2	BRACE ASSEMBLY, Aileron control hose support bracket aft RH	1	FR	
	ATTACHING PARTS				
	AN509-10R12	SCREW	1	FR	
	2W18-10	WASHER, Flat (NA) (89372)	1	FR	
	AN365-1032	NUT	1	FR	
	---*---				
-161	209-523160-1	BRACE ASSEMBLY, Aileron control nose support bracket forward LH	1	FR	
-162	209-523160-2	BRACE ASSEMBLY, Aileron control hose support bracket forward RH	1	FR	
	ATTACHING PARTS				
	AN520-10R10	SCREW	1	FR	
	AN509-10R12	SCREW	1	FR	
	2W18-10	WASHER, Flat (NA) (89372)	2	FR	
	AN365-1032	NUT	2	FR	
	---*---				
-163	3H3-4-0145	HOSE ASSEMBLY, Plastic covered (NA) (89372) (make from MS28741-4-0145) (pressure)	1	FR	
-164	3H3-4-0135	HOSE ASSEMBLY, Plastic covered (NA) (89372) (make from MS28741-4-0135) (return)	1	FR	
-165	209-58705	ACTUATOR ASSEMBLY, Hydraulic aileron flight control (see figure 128 for complete breakdown)	1	FR	
-166	209-58729-11	BOLT, Hydraulic aileron flight control fitting	1	FR	
	2W18-516	WASHER, Flat (NA) (89372)	1	FR	
	AN365-524	NUT	1	FR	
-167	209-58772	ROD ASSEMBLY, Aileron flight control actuator (see Surface and Secondary Controls)	1	FR	
-168	209-52681	GROMMET, Tube support wing leading edge LH	5	FR	
-169	209-52680	GROMMET, Tube support wing leading edge RH	5	FR	
-170	209-52687	GROMMET, Tube support wing leading edge inboard LH	3	FR	
-171	209-52686	GROMMET, Tube support wing leading edge inboard RH	3	FR	
-172	209-58340-1	BLOCK, Hydraulic line, wing rear spar canted LH	1	HZ	
-173	209-58340-2	BLOCK, Hydraulic line, wing rear spar canted RH	1	HZ	
-174	209-58339-3	BLOCK, Hydraulic line, wing rear spar inboard	2	HZ	
-175	209-58339-5	BLOCK, Hydraulic line, wing rear spar inboard	2	HZ	

NO. 1 FLIGHT CONTROL SYSTEM EQUIPMENT AND EMERGENCY PUMP ASSEMBLY

FIGURE & INDEX NO.	PART NUMBER	1 2 3 4 5 6 7 NOMENCLATURE	UNITS PER ASSY.	USABLE ON CODE	S/C NO.
124-1	3005-S4-12D	COUPLING HALF, Hydraulic self-sealing (AQ) (00624)	1		
-2	3005-S4-6D	COUPLING HALF, Hydraulic self-sealing (AQ) (00624)	3		
	ATTACHING PARTS				
	AN520-10R10	SCREW	12		
	2W18-10M	WASHER, Flat (NA) (89372)	24		
	AN365-1032	NUT	12		
	---*---				
-3	209-58811-27	LINE ASSEMBLY, No. 1 flight control pressure from engine pump disconnect fuselage station 214 to check valve station 213	1		
-4	AN6280-6	VALVE	1		
	MS21902D6	UNION	2		
	AN6290-6	GASKET	2		
-5	209-58811-23	LINE ASSEMBLY, No. 1 flight control pressure from check valve fuselage station 213 to cross station 210	1		
-6	MS21906D6	CROSS	3		
-7	209-58811-21	LINE ASSEMBLY, No. 1 flight control pressure from cross fuselage station 210 to tee station 196	1		
-8	MS21910D6	TEE (2 used on ships BJ)	1		366
	MS21916D6-4	REDUCER (2 used on ships BJ)	1		366
	AN6290-6	GASKET (2 used on ships BJ)	1		366
-9	209-58811-91	LINE ASSEMBLY, No. 1 flight control pressure from tee fuselage station 106 to elbow in reservoir	1		
-10	209-58654	HYDRAULIC EQUIPMENT ASSEMBLY, No. 1 flight control system reservoir (see figure 130 for complete breakdown)	1		
	209-58302	SECTOR ASSEMBLY, Hydraulic flight control system reservoir support	1		
	ATTACHING PARTS				
	AN3-12A	BOLT	2		
	2W18-10M	WASHER, Flat (NA) (89372)	2		
	---*---				
-11	325-62-606SH	CLAMP (MAR) (98625)	2		
-12	209-58811-29	LINE ASSEMBLY, No. 1 flight control pressure from tee fuselage station 196 to aileron filter station 187	1		
	209-58678	HYDRAULIC EQUIPMENT ASSEMBLY, No. 1 flight control system aileron filter	1		
	ATTACHING PARTS				
	AN4-24A	BOLT	2		
	2W18-416M	WASHER, Flat (NA) (89372)	2		
	NAS43DD4-32	SPACER	2		
	---*---				
-13	MS28720-6	. FILTER (see figure 169 for breakdown)	1		
	MS21908D6	. ELBOW	2		
	AN6290-6	. GASKET	2		
	AN6291-6	. RING	2		
	AN6289-6	. NUT	2		
-14	209-58811-31	LINE ASSEMBLY, No. 1 flight control pressure from filter fuselage station 186 LH to elbow in wheel well deck station 184 RH	1		
-15	MS21908D6	ELBOW	2		
	2W18-916	WASHER, Flat (NA) (89372)	2		
	AN924-6D	NUT	2		
-16	209-58811-53	LINE ASSEMBLY, No. 1 flight control return from elbow in wheel well deck fuselage station 186 RH to tee in filter station 188 LH	1		
	209-58677	HYDRAULIC EQUIPMENT ASSEMBLY, No. 1 flight control system return filter	1		
	ATTACHING PARTS				
	AN4-24A	BOLT	2		
	2W18-416M	WASHER, Flat (NA) (89372)	2		
	NAS43DD4-32	SPACER	2		
	---*---				
-17	MS28720-6	. FILTER (see figure 169 for breakdown)	1		
	MS21909D6	. TEE	1		
	MS21908D6	. ELBOW	1		
	AN6290-6	. GASKET	2		
	AN6291-6	. RING	2		
	AN6289-6	. NUT	2		
-18	209-58811-51	LINE ASSEMBLY, No. 1 flight control return from elbow in filter fuselage station 188 to elbow in reservoir	1		
-19	209-58841-11	LINE ASSEMBLY, No. 1 flight control reservoir drain from reservoir to 90° elbow fuselage station 192	1	ET	366
	209-58841-45	LINE ASSEMBLY, No. 1 flight control reservoir drain to 90° elbow station 192	1	FR	
-20	209-58811-49	LINE ASSEMBLY, No. 1 flight control return from elbow in filter fuselage station 188 to tee station 205	1	BJ	366
-21	209-58841-25	LINE ASSEMBLY, No. 1 flight control emergency pump case drain from emergency pump to fuselage station 205.5	1	BJ	366
-22	209-58841-23	LINE ASSEMBLY, No. 1 flight control return from tee fuselage station 205.5 to tee station 215.5	1	BJ	366
	209-58841-37	LINE ASSEMBLY, No. 1 flight control return from tee station 215.5 to tee on return filter station 187	1	BK	
-23	MS21905D6	TEE	2		
-24	209-58841-13	LINE ASSEMBLY, No. 1 flight control return from tee fuselage station 215.5 to tee station 223	1		
-25	209-58811-43	LINE ASSEMBLY, No. 1 flight control engine pump case drain from engine pump disconnect fuselage station 221 to tee station 222	1		
-26	209-58811-35	LINE ASSEMBLY, No. 1 flight control return from tee station 222 to elbow in relief valve station 224	1		
	209-58624	HYDRAULIC EQUIPMENT ASSEMBLY, No. 1 flight control system relief valve	1		

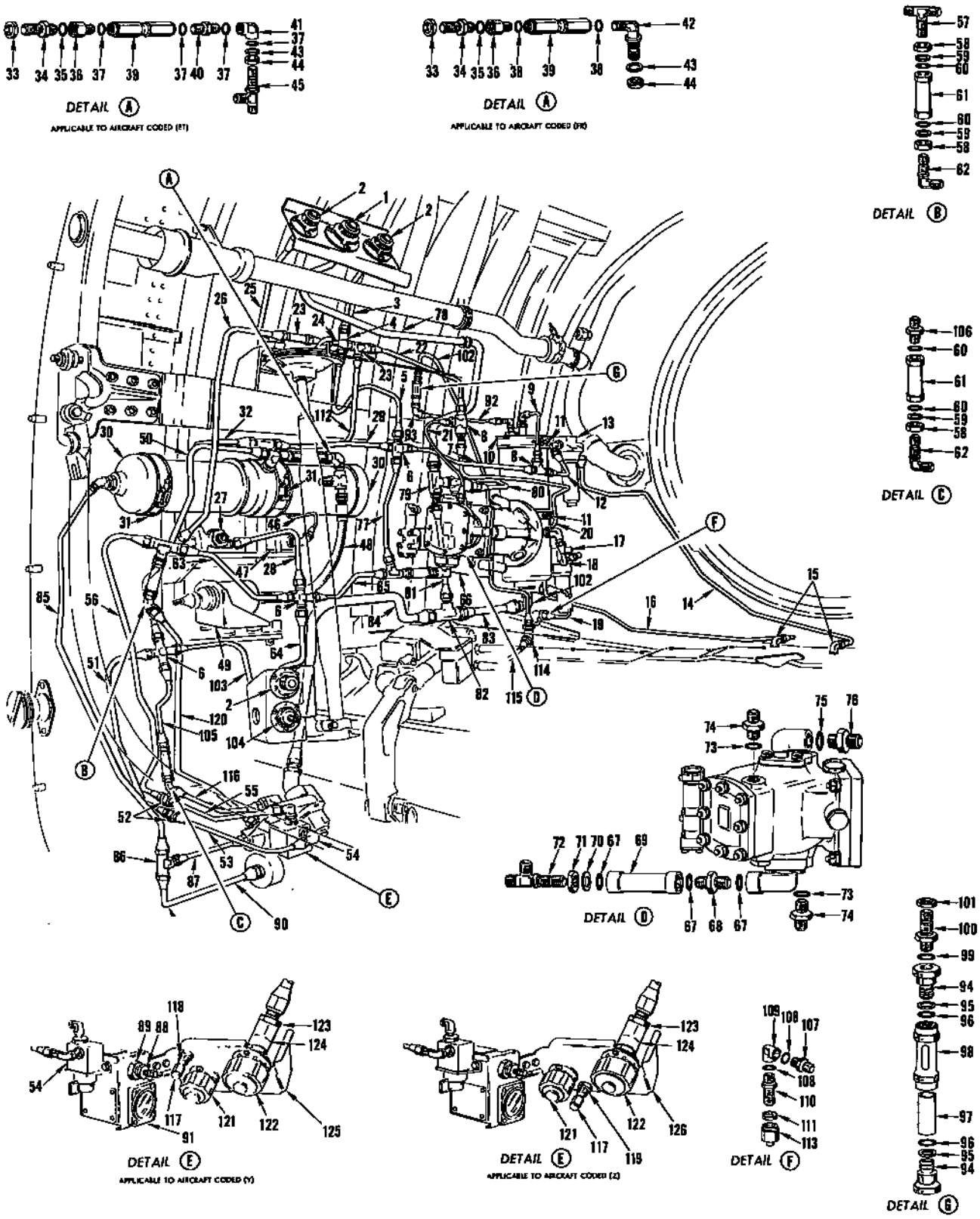

FIGURE 124 - NO. 1 FLIGHT CONTROL SYSTEM EQUIPMENT AND EMERGENCY PUMP ASSEMBLY

NO. 1 FLIGHT CONTROL SYSTEM EQUIPMENT AND EMERGENCY PUMP ASSEMBLY

FIGURE & INDEX NO.	PART NUMBER	1 2 3 4 5 6 7 NOMENCLATURE	UNITS PER ASSY.	USABLE ON CODE	S/C NO.
124		ATTACHING PARTS			
	AN3-22A	BOLT	3		
	2W18-10M	WASHER, Flat (NA) (89372)	3		
		---*---			
-27	AN6279-6CD	. VALVE	1		
	MS21907D6	. ELBOW	1		
	MS21908D6	. ELBOW	1		
	AN6290-6	. GASKET	2		
	AN6291-6	. RING	2		
	AN6289-6	. NUT	2		
-28	209-58811-17	LINE ASSEMBLY, No. 1 flight control pressure from cross fuselage station 221 to relief valve station 224	1		
-29	209-58811-25	LINE ASSEMBLY, No. 1 flight control pressure from cross fuselage station 209 to tee in accumulator	1		
-30	209-58698	HYDRAULIC EQUIPMENT ASSEMBLY, No. 1 flight control system accumulator (see figure 132 for complete breakdown)	1		
	209-58249	SECTOR ASSEMBLY, Hydraulic flight control system accumulator support	2		
		ATTACHING PARTS			
	AN3-12A	BOLT	4		
	2W18-10M	WASHER, Flat (NA) (89372)	6		
	AN365-1032	NUT	2		
		---*---			
-31	325-62-444SH	CLAMP (MAR) (98625)	2		
-32	209-58811-37	LINE ASSEMBLY, No. 1 flight control pressure from tee in accumulator bulkhead union station 220	1		
-33	AN924-6D	NUT	1		
-34	MS21903D6	UNION	1		
-35	AN6290-6	GASKET	1		
-36	AN894D6-4	BUSHING	1		
-37	AN6290-4	GASKET	4	ET	445
-38	AN6290-4	GASKET	2	FR	
-39	18D2	SNUBBER (OPS) (76906)	1		
-40	MS21902D4	UNION	1	ET	445
-41	AN939D4	ELBOW	1	ET	445
-42	MS21908D4	ELBOW	1	FR	
-43	AN6291-4	RING	1		
-44	AN6289-4	NUT	1		
-45	MS21912D4	TEE	1	ET	
-46	209-58811-93	LINE ASSEMBLY, No. 1 flight control pressure from tee fuselage station 215 to pressure switch station 218	1	ET	445
	209-58647	HYDRAULIC EQUIPMENT ASSEMBLY, No. 1 flight control system switch	1	ET	445
		ATTACHING PARTS			
	AN3-20A	BOLT	2	ET	445
	2W18-10M	WASHER, Flat (NA) (89372)	2	ET	445
		---*---			
-47	90000-2	. SWITCH, Hydraulic pressure (HYRM) (81873) (interchangeable with 106130-3 (LADM) (91864) or 4000-24 (Frebank Co) (98087)	1	ET	
	AN6290-4	. GASKET	1	ET	
	AN6291-4	. RING	1	ET	
	AN6289-4	. NUT	1	ET	
	MS21908D4	. ELBOW	1	ET	
-48	MS28751-4-0134	HOSE ASSEMBLY (pressure)	1	ET	445
	MS28751-4-0154	HOSE ASSEMBLY (pressure)	1	FR	
-49	209-58660-31	HYDRAULIC EQUIPMENT ASSEMBLY, No. 1 and No. 2 flight control and utility systems pressure transmitter	1		
		ATTACHING PARTS			
	AN515-8R24	SCREW	4		
		---*---			
	MS21902D4	. UNION	1		
	AN6290-4	. GASKET	1		
	209-51098-20	. SUPPORT ASSEMBLY, Hydraulic pressure transmitter complete (see Electrical and Instrument)	1		
-50	209-58811-39	LINE ASSEMBLY, No. 1 flight control return from cross fuselage station 229 to 90° elbow in accumulator	1		
-51	209-58841-21	LINE ASSEMBLY, No. 1 flight control return from reducer fuselage station 233 to cross station 228	1	ET	
	209-58841-49	LINE ASSEMBLY, No. 1 flight control return from reducer station 233 to cross station 228	1	FR	
-52	MS21916D6-4	REDUCER	2		
-53	209-58841-3	LINE ASSEMBLY, No. 1 flight control return from pressure dump valve to reducer fuselage station 233	1		
	209-58619	HYDRAULIC EQUIPMENT ASSEMBLY, No. 1 valve flight control system accumulator dump	1		
		ATTACHING PARTS			
	AN3-5A	BOLT	2		
	2W18-10M	WASHER, Flat (NA) (89372)	4		
	AN365-1032	NUT	2		
		---*---			
-54	27600	. VALVE, Hydraulic main two-way shutoff (HYRM) (81873) (for breakdown see Technical Manual 9H8-4-43-3) (interchangeable with 104465 (WTR) (94256) (for breakdown see Technical Manual NA 03-30EB-566) or 10-1006 (PAET) (92003)(for breakdown see Technical Manual NA 03-30CG-505)) (10-1006 (PAET) (92003) inactive for future procurement)	1		

NO. 1 FLIGHT CONTROL SYSTEM EQUIPMENT AND EMERGENCY PUMP ASSEMBLY

FIGURE & INDEX NO.	PART NUMBER	1 2 3 4 5 6 7 NOMENCLATURE	UNITS PER ASSY.	USABLE ON CODE	S/C NO.
124	AN6290-4	. GASKET	2		
	AN6291-4	. RING	2		
	AN6289-4	. NUT	2		
	MS21908D4	. ELBOW	2		
-55	209-58811-95	LINE ASSEMBLY, No. 1 flight control pressure from reducer fuselage station 233 to elbow in pressure dump valve	1		
-56	209-58841-29	LINE ASSEMBLY, No. 1 flight control pressure from tee fuselage station 227 to - reducer station 233.5	1		
-57	MS21909D6	TEE	1		
-58	AN6289-6	NUT	4		
-59	AN6291-6	RING	3		
-60	AN6290-6	GASKET	4		
-61	AN6280-6	VALVE	2		
-62	MS21908D6	ELBOW	2		
-63	209-58841-27	LINE ASSEMBLY, No. 1 flight control pressure from cross fuselage station 221-- to tee station 227	1		
-64	209-58811-15	LINE ASSEMBLY, No. 1 flight control pressure from cross fuselage station 221-- to field disconnect	1		
-65	209-58811-13	LINE ASSEMBLY, No. 1 flight control pressure from tee fuselage station 212 to - cross station 220	1	BJ	366
	209-58841-41	LINE ASSEMBLY, No. 1 flight control pressure from cross station 210 to cross - station 220	1	HA	366
	209-58841-47	LINE ASSEMBLY, No. 1 flight control pressure from cross station 210 to cross - station 220	1	FR	
	209-58649	HYDRAULIC EQUIPMENT ASSEMBLY, No. 1 flight control system motor driven pump	1	BJ	366
	ATTACHING PARTS				
	AN4-6A	BOLT	4	BJ	366
	2W18-416M	WASHER, Flat (NA) (89372)	8	BJ	366
	AN365-428	NUT	4	BJ	366
	---*---				
-66	225R0100-1-0	. MOTOR PUMP ASSEMBLY (CNL) (14650) (contains motor 225G0105-1-0 ---- (CNL) (14650) and pump AA-32305-R-2 (VI) (62983)	1	BJ	366
-67	AN6290-6	. GASKET	3	BJ	366
-68	MS21902D6	. UNION	1	BJ	366
-69	AN6280-6	. VALVE	1	BJ	366
-70	AN6291-6	. RING	1	BJ	366
-71	AN6289-6	. NUT	1	BJ	366
-72	MS21912D6	. TEE	1	BJ	366
-73	AN6290-4	. GASKET	2	BJ	366
-74	MS21902D4	. UNION	2	BJ	366
-75	AN6290-8	. GASKET	1	BJ	366
-76	MS21902D8	. UNION	1	BJ	366
-77	209-58811-19	LINE ASSEMBLY, No. 1 flight control pressure from tee fuselage station 211 -- to cross station 210	1	BJ	366
-78	209-58811-7	LINE ASSEMBLY, No. 1 flight control suction from tee fuselage station 204 to -- engine disconnect station 218	1	BJ	366
	209-58841-39	LINE ASSEMBLY, No. 1 flight control suction from engine disconnect station 218 to tee station 204	1	HA	366
	209-58841-53	LINE ASSEMBLY, No. 1 flight control suction from engine disconnect station 218 to tee station 204	1	FR	
-79	MS21910D12	TEE	1	BJ	366
	AN6290-12	GASKET	1	BJ	366
	MS21916D12-8	REDUCER	1	BJ	366
-80	209-58811-11	LINE ASSEMBLY, No. 1 flight control suction from tee fuselage station 204 to -- motor driven pump	1	BJ	366
-81	209-58811-5	LINE ASSEMBLY, No. 1 flight control suction from tee to tee fuselage station 204	1	BJ	366
-82	MS21905D12	TEE	1		
-83	209-58811-3	LINE ASSEMBLY, No. 1 flight control suction from elbow in reservoir to tee -- fuselage station 204	1	ET	
	209-58841-55	LINE ASSEMBLY, No. 1 flight control suction from elbow in reservoir to tee -- station 204	1	FR	
-84	209-58841-31	LINE ASSEMBLY, No. 1 flight control suction from tee fuselage station 204 to -- ground test panel disconnect station 220	1	Y	
	209-58841-35	LINE ASSEMBLY, No. 1 flight control suction from tee fuselage station 204 to -- ground test panel disconnect station 220	1	FS	
	209-58841-51	LINE ASSEMBLY, No. 1 flight control suction from tee station 204 to ground test panel disconnect station 220	1	FR	
-85	209-58841-33	LINE ASSEMBLY, No. 1 flight control accumulator air from tee fuselage station - 235.5 to accumulator	1		
	209-58841-57	LINE ASSEMBLY, No. 1 flight control accumulator air from tee station 235.5 to - accumulator	1	FR	
-86	MS21905D4	TEE	1		
-87	209-58841-5	LINE ASSEMBLY, No. 1 flight control accumulator air from air filter valve to -- tee fuselage station 235.5	1		
-88	AN6287-1	VALVE	1		
-89	194-58315	ADAPTER, Hydraulic accumulator air valve	1		
	AN924-10D	NUT	1		
	AN6290-4	GASKET	1		
	MS21902D4	UNION	1		
-90	209-58841-7	LINE ASSEMBLY, No. 1 flight control accumulator air from tee fuselage station - 235.5 to air gage	1		
-91	AN5771T7A	GAGE (interchangeable with AN5771T7B)	1		

NO. 1 FLIGHT CONTROL SYSTEM EQUIPMENT AND EMERGENCY PUMP ASSEMBLY

FIGURE & INDEX NO.	PART NUMBER	1 2 3 4 5 6 7 NOMENCLATURE	UNITS PER ASSY.	USABLE ON CODE	S/C NO.
124		ATTACHING PARTS			
	AN515-6R12	SCREW	4		
	2W18-6M	WASHER, Flat (NA) (89372)	8		
	AN365-632	NUT	4		
		---*---			
	MS21902D4	UNION	1		
	AN6290-4	GASKET	1		
-92	209-58811-57	LINE ASSEMBLY, No. 1 flight control reservoir overflow from reservoir to elbow in sight gage fuselage station 200	1		
-93	MS21908D6	ELBOW	1		
	AN6289-6	NUT	1		
	AN6291-6	RING	1		
	AN6290-6	GASKET	1		
	163-58715	GAGE ASSEMBLY, Hydraulic flight control air purging sight	1		
-94	163-587260	. FITTING, Hydraulic flight control air purging sight	2		
-95	2W1R40-30-62	. WASHER, Plain (NA) (89372)	2		
-96	AN6227-9	. PACKING	2		
-97	163-587261	. TUBE, Hydraulic flight control air purging sight	1		
-98	163-587259	. HOUSING, Hydraulic flight control air purging sight	1		
-99	AN6290-6	GASKET	1		
-100	MS21903D6	UNION	1		
-101	AN924-6D	NUT	1		
-102	209-58811-55	LINE ASSEMBLY, No. 1 flight control reservoir overflow sight gage fuselage station 200 to overboard drain station 194	1		
-103	209-58811-33	LINE ASSEMBLY, No. 1 flight control return from union quick disconnect fuselage station 222 to cross station 220	1		
-104	6526N45C6	NIPPLE ASSEMBLY, 3/8 inch self-seal bayonet lock (WIG) (79326) (supersedes 6526K6 (WIG) (79326) for future procurement)	1		
		ATTACHING PARTS			
	AN520-10R10	SCREW	3		
	2W18-10M	WASHER, Flat (NA) (89372)	6		
	AN365-1032	NUT	3		
		---*---			
	AN6290-6	GASKET	2		
	AN6291-6	RING	1		
	AN6289-6	NUT	1		
	AN941D6	ELBOW	1		
	MS21902D6	UNION	1		
-105	209-58841-15	LINE ASSEMBLY, No. 1 flight control return from union in check valve fuselage station 228 to cross station 228	1		
-106	MS21902D6	UNION	1		
-107	MS21902D4	UNION	1		
-108	AN6290-4	GASKET	2		
-109	AN939D4	ELBOW	1		
-110	AN832-4D	UNION	1		
-111	AN924-4D	NUT	1		
-112	209-58811-41	LINE ASSEMBLY, No. 1 flight control return from union in accumulator to tee fuselage station 215.5	1		
-113	209-58428	CAP ASSEMBLY, Hydraulic fill and drain lines	1		
-114	MS21907D6	ELBOW	1		
	2W18-916	WASHER, Flat (NA) (89372)	1		
	AN924-6D	NUT	1		
-115	209-58824-37	LINE ASSEMBLY, Utility reservoir drain from elbow fuselage station 195 to overboard drain station 197	1		
-116	209-58824-61	LINE ASSEMBLY, No. 1 flight control reservoir fill from elbow in test panel fuselage station 225 to elbow station 228.75	1	Y	
	209-58824-81	LINE ASSEMBLY, No. 1 flight control reservoir fill from elbow in test panel fuselage station 225 to elbow station 228.75	1	Z	
-117	181-58370	CAP ASSEMBLY, Hydraulic flared tube fitting	1		
-118	MS21902D6	UNION	1	Y	
-119	MS21901D6	UNION	1	Z	
	AN6290-6	GASKET	2	Y	
	AN939-6D	ELBOW	1	Y	
	AN832-6D	UNION	1	Y	
	AN924-6D	NUT	1		
-120	209-58824-59	LINE ASSEMBLY, No. 1 flight control pressure from elbow in test panel fuselage station 224 to elbow station 223	1	ET	
	209-58824-93	LINE ASSEMBLY, No. 1 flight control pressure from elbow in test panel fuselage station 224 to elbow station 223	1	FR	
-121	3055-S11-6D	COUPLING HALF AND DUST CAP ASSEMBLY (AQ) (00624)	1		
-122	3055-S11-12D	COUPLING HALF AND DUST CAP ASSEMBLY (AQ) (00624)	1		
		ATTACHING PARTS			
	AN520-10R10	SCREW	6		
	2W18-10M	WASHER, Flat (NA) (89372)	12		
	AN365-1036	NUT	6		
		---*---			
-123	MS21902D12	UNION	1		
	AN6290-12	GASKET	2		
-124	AN941D12	ELBOW	1		
	AN6291-12	RING	1		
	AN6289D12	NUT	1		
-125	209-58210	BRACKET ASSEMBLY, Hydraulic external disconnect LH	1	Y	
-126	209-58210-11	BRACKET ASSEMBLY, Hydraulic external disconnect LH	1	FS	
	209-58210-21	BRACKET ASSEMBLY, Hydraulic external disconnect LH	1	FR	

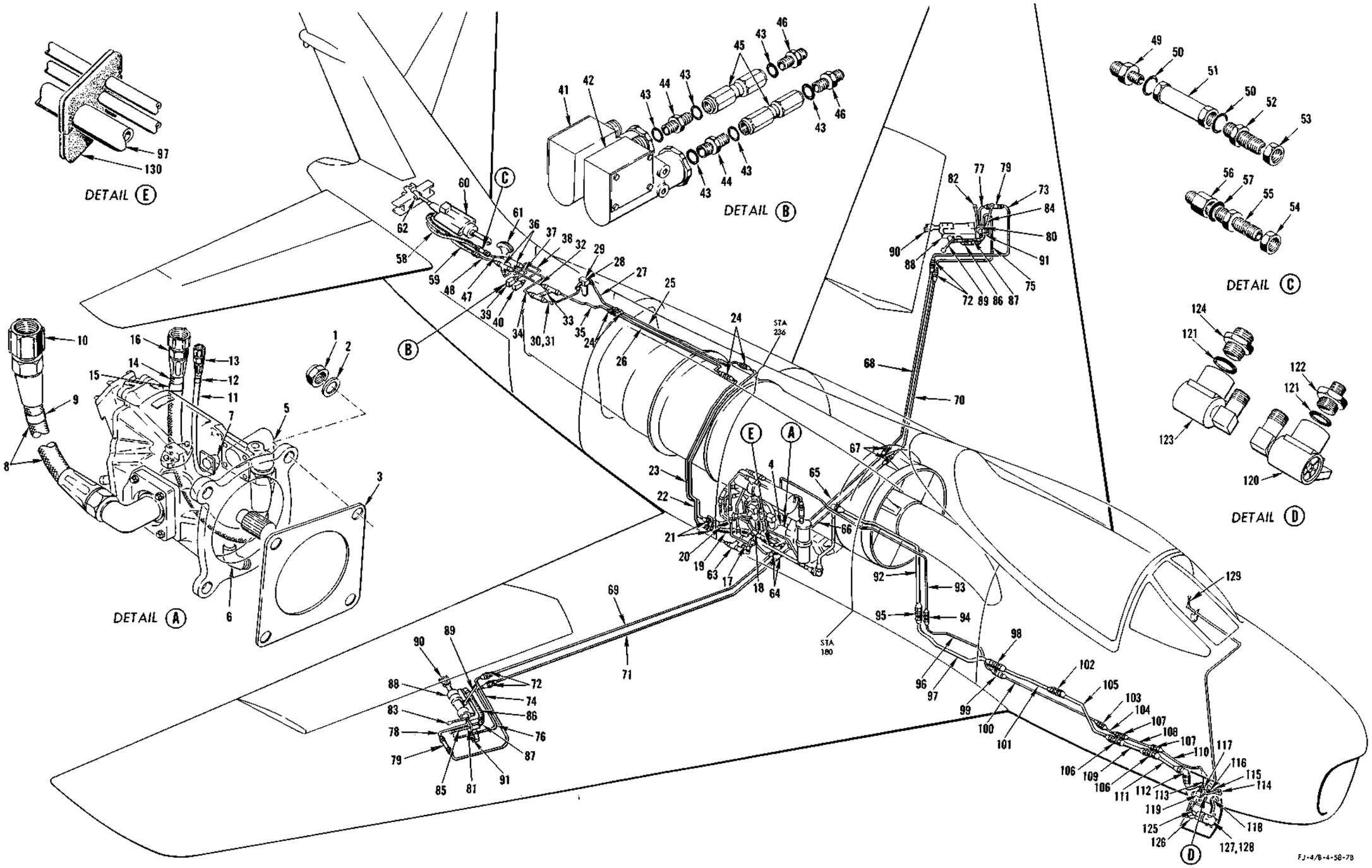

FIGURE 125 - NO. 2 FLIGHT CONTROL AND EMERGENCY SYSTEM

NO. 2 FLIGHT CONTROL AND EMERGENCY SYSTEM

FIGURE & INDEX NO.	PART NUMBER	1 2 3 4 5 6 7 NOMENCLATURE	UNITS PER ASSY.	USABLE ON CODE	S/C NO.
125-1	6087D4	NUT, Self-locking high temperature (WAC) (66640)	4		
-2	AN122584	WASHER	4		
-3	AN4044-1	GASKET	1		
-4	209-58650-21	HYDRAULIC EQUIPMENT ASSEMBLY, Pump variable volume engine driven	1		
-5	AA-65306-R	. PUMP ASSEMBLY, Variable delivery (VI) (62983) (supersedes AA-60306-R (VI) (62983) for future procurement) (interchangeable with AA-60306-RB (VI) (62983))	1		
-6	AN837-4D	. ELBOW	1		
	AN6289-4	. NUT	1		
	AN6291-4	. RING	1		
	AN6290-4	. GASKET	1		
-7	209-58122	. FITTING, Hydraulic bulkhead 90° elbow	1		
	AN6289-6	. NUT	1		
	AN6291-6	. RING	1		
	AN6290-6	. GASKET	1		
-8	MS28741-12-0134	HOSE ASSEMBLY (suction)	1		
-9	209-58401-17	TAG, Hydraulic hose assembly identification (flight control system No. 2 suction)	1		
-10	150-S1-12	COUPLING HALF, Self-sealing (AQ) (00624)	1		
	C155-25-12	NUT, Union (AQ) (00624)	1		
	AN6290-12	GASKET	2		
	AN941D12	ELBOW	1		
	AN815D12	UNION	1		
-11	MS28741-6-0190	HOSE ASSEMBLY (case drain)	1		
-12	209-58401-13	TAG, Hydraulic hose assembly identification (flight control system No. 2 case drain)	1		
-13	150-S1-6	COUPLING HALF, Self-sealing (AQ) (00624)	1		
	C155-25-8	NUT, Union (AQ) (00624)	1		
-14	AN6292-8-27-1/2	HOSE ASSEMBLY (pressure)	1		
-15	209-58401-5	TAG, Hydraulic hose assembly identification (flight control system pressure No. 2)	1		
-16	150-S1-8	COUPLING HALF, Self-sealing (AQ) (00624)	1		
	C155-25-8	NUT, Union (AQ) (00624)	1		
-17	150-S1-6	COUPLING HALF, Self-sealing (AQ) (00624)	1		
	C155-25-8	NUT, Union (AQ) (00624)	1		
-18	6520N45C6	SOCKET ASSEMBLY, Quick disconnect 3/8-inch self-sealing (WIG) (79326) (supersedes 6520D6 (WIG) (79326) which supersedes 6500D6 (WIG) (79326) for future procurement)	1		
-19	AN6292-6-20	HOSE ASSEMBLY (pressure)	1		
-20	MS28741-6-0200	HOSE ASSEMBLY (return)	1		
-21	MS21901D6	ADAPTER	2		
	AN924-6D	NUT	2		
-22	209-58810-89	LINE ASSEMBLY, No. 2 flight control system pressure from fitting fuselage station 236.5 RH to union station 246.032	1	ET	
	209-58822-59	LINE ASSEMBLY, No. 2 flight control system pressure from fitting fuselage station 236.5 RH to union station 246.032	1	FR	
-23	209-58810-87	LINE ASSEMBLY, No. 2 flight control system return from fuselage station 236.5 RH to union station 246.032	1	ET	
	209-58822-61	LINE ASSEMBLY, No. 2 flight control system return from fuselage station 236.5 RH to union station 246.032	1	MD	
	209-58822-69	LINE ASSEMBLY, No. 2 flight control system return from fuselage station 236.5 RH to union station 246.032	1	ME	
-24	MS21903D6	UNION	4		
	2W18-916	WASHER, Flat (NA) (89372)	4		
	AN924-6D	NUT	4		
-25	209-58810-93	LINE ASSEMBLY, No. 2 flight control system pressure from union fuselage station 246.032 to union station 331.5	1	AR	
	209-58810-67	LINE ASSEMBLY, No. 2 flight control system pressure from union station 246.032 to union station 331.5	1	AS	
-26	209-58810-95	LINE ASSEMBLY, No. 2 flight control system return from union fuselage station 246.032 to union station 331.5	1	AR	
	209-58810-71	LINE ASSEMBLY, No. 2 flight control system return from union station 246.032 to union station 331.5	1	AS	
-27	209-58812-29	LINE ASSEMBLY, No. 2 flight control system pressure from union fuselage station 331.5 to elbow in filter station 343.25	1	AR	
	209-58812-19	LINE ASSEMBLY, No. 2 flight control system pressure from union station 331.5 to elbow in filter station 343.25	1	AS	
-28	209-58675	HYDRAULIC EQUIPMENT ASSEMBLY, No. 2 flight control system stabilizer filter	1		
	ATTACHING PARTS				
	AN4-23A	BOLT	2		
	2W18-416	WASHER, Flat (NA) (89372)	2		
	NAS43DD4-20	SPACER	2		
	---*---				
-29	MS28720-6	. FILTER	1		
	MS21908D6	. ELBOW	2		
	AN6290-6	. GASKET	2		
	AN6291-6	. RING	2		
	AN6289-6	. NUT	2		
-30	209-58812-15	LINE ASSEMBLY, No. 2 flight control system pressure from elbow in filter fuselage station 343.25 to check valve station 375.125 RH	1	ET	445
-31	209-58820-39	LINE ASSEMBLY, No. 2 flight control system pressure from filter fuselage station 345 to tee in check valve 349 RH	1	FR	
	209-58812-27	LINE ASSEMBLY, No. 2 flight control system return from union fuselage station 331.5 to union station 375.125 RH	1	FK	445

NO. 2 FLIGHT CONTROL AND EMERGENCY SYSTEM

FIGURE & INDEX NO.	PART NUMBER	1 2 3 4 5 6 7 NOMENCLATURE	UNITS PER ASSY.	USABLE ON CODE	S/C NO.
125	209-58812-17	LINE ASSEMBLY, No. 2 flight control system return from union station 331.5 to union station 375.125	1	AS	445
-32	209-58820-37	LINE ASSEMBLY, No. 2 flight control return from tee in check valve fuselage station 350 RH to bulkhead union fuselage station 331.5	1	FR	
-33	AN6280-6	VALVE	1	FR	
	MS21909D6	TEE	2	FR	
	AN6290-6	GASKET	2	FR	
	AN6291-6	RING	2	FR	
	AN6289-6	NUT	2	FR	
-34	209-58820-41	LINE ASSEMBLY, No. 2 flight control system pressure from tee in check valve fuselage station 349 RH to tee fuselage station 362	1	FR	
-35	209-58820-35	LINE ASSEMBLY, No. 2 flight control system return from tee fuselage station 364.25 RH to tee in check valve fuselage station 350	1	FR	
-36	MS21905D6	TEE	2	FR	
-37	209-58820-43	LINE ASSEMBLY, No. 2 flight control system pressure from tee fuselage station 362 RH to pressure switch fuselage station 360	1	FR	
-38	209-58820-33	LINE ASSEMBLY, No. 2 flight control system return from tee fuselage station 364.25 RH to pressure switch fuselage station 360.25	1	FR	
-39	209-58664-3	HYDRAULIC EQUIPMENT ASSEMBLY, Pressure switch flight control	1	FR	
-40	209-58664-5	HYDRAULIC EQUIPMENT ASSEMBLY, Pressure switch flight control	1	FR	
	ATTACHING PARTS				
	AN3-33A	BOLT	2	FR	
	2W18-10M	WASHER, Flat (NA) (89372)	2	FR	
	---*---				
-41	90000-2	. SWITCH, Hydraulic pressure (HYRM) (81873) (interchangeable with 4000-24 (Frebank Co) (98087) or 106130-3 (LADM) (91864))	1	FR	
-42	2170-2	. SWITCH, Hydraulic pressure (Frebank Co) (98087) (interchangeable with 90000-12 (HYRM) (81873) or 106130-9 (LADM) (91864))	1	FR	
-43	AN6290-4	. GASKET	3	FR	
-44	MS21902D4	. UNION	1	FR	
-45	18D2	. SNUBBER (OPS) (76906)	1	FR	
-46	MS21916D6-4	. REDUCER	1	FR	
-47	209-58820-45	LINE ASSEMBLY, No. 2 flight control system pressure from tee fuselage station 362 RH to check valve fuselage station 375	1	FR	
-48	209-58820-31	LINE ASSEMBLY, No. 2 flight control system return from bulkhead union fuselage station 375.125 RH to tee fuselage station 364.25	1	FR	
-49	MS21916D6-4	REDUCER	1		
-50	AN6290-4	GASKET	2		
-51	AN6280-4	VALVE	1		
-52	AN832-4	UNION	1	ET	
	MS21903-4D	UNION	1	FR	
-53	AN924-4D	NUT	1		
-54	AN924-6D	NUT	1		
-55	MS21903D6	UNION	1		
-56	AN894D6-4	BUSHING	1		
-57	AN6290-6	GASKET	1		
-58	3H3-4-0324	HOSE ASSEMBLY, Plastic covered (NA) (89372) (pressure) (make from MS28741-4-0324)	1	ET	
	209-58773-7	HOSE ASSEMBLY, Hydraulic plastic covered	1	FR	
-59	3H3-4-0240	HOSE ASSEMBLY, Plastic covered (NA) (89372) (return) (make from MS28741-4-0240)	1	ET	
	MS28741-4-0240	HOSE ASSEMBLY	1	FR	
-60	209-58706	ACTUATOR ASSEMBLY, Hydraulic flight control stabilizer (see figure 131 for breakdown)	1		
-61	209-52237	SECTOR, Horizontal stabilizer control rear fuselage (see Surface and Secondary Controls)	1		
-62	209-58795	BOLT, Hydraulic power control cylinder rod end	2		
	2W18-1216M	WASHER, Flat (NA) (89372) (use under bolthead)	2		
	209-58789	WASHER, Hydraulic flight control stabilizer rod end (use under nut)	2		
	AN320-8	NUT	2		
-63		NO. 2 FLIGHT CONTROL SYSTEM HYDRAULIC EQUIPMENT (see figure 126 for breakdown)			
-64	MS21905D6	TEE	2	ET	
	MS21912D6	TEE	2	FR	
	AN924-6D	NUT	2	FR	
-65	209-58818-7	LINE ASSEMBLY, No. 2 flight control system pressure from union at BL 20 LH to tee at BL 20 RH	1	ET	
	209-58818-87	LINE ASSEMBLY, No. 2 flight control system pressure from union at BL 20 LH to tee at BL 20 RH	1	FR	
-66	209-58818-9	LINE ASSEMBLY, No. 2 flight control system return from union at BL 20 LH to tee at BL 20 RH	1	ET	
	209-58818-89	LINE ASSEMBLY, No. 2 flight control system return from union at BL 20 LH to tee at BL 20 RH	1	FR	
-67	MS21902D6	UNION	2		
-68	209-58818-15	LINE ASSEMBLY, No. 2 flight control system pressure from union at BL 20 LH to reducer at aileron well LH	1	DC	
	209-58818-47	LINE ASSEMBLY, No. 2 flight control system pressure from union at BL 20 LH to reducer at aileron well LH	1	JW	
	209-58818-71	LINE ASSEMBLY, No. 2 flight control system pressure from union at BL 20 LH to reducer at aileron well LH	1	HZ	
	209-58828-3	LINE ASSEMBLY, No. 2 flight control system pressure from union at BL 20 LH to reducer at aileron well LH	1	KL	

NO. 2 FLIGHT CONTROL AND EMERGENCY SYSTEM

FIGURE & INDEX NO.	PART NUMBER	1 2 3 4 5 6 7 NOMENCLATURE	UNITS PER ASSY.	USABLE ON CODE	S/C NO.
125-69	209-58818-17	LINE ASSEMBLY, No. 2 flight control system pressure from tee at BL 20 RH to reducer at aileron well RH	1	DC	
	209-58818-49	LINE ASSEMBLY, No. 2 flight control system pressure from union at BL 20 RH to reducer at aileron well RH	1	JW	
	209-58818-73	LINE ASSEMBLY, No. 2 flight control system pressure from union at BL 20 RH to reducer at aileron well RH	1	HZ	
	209-58818-5	LINE ASSEMBLY, No. 2 flight control system pressure from union at BL 20 RH to reducer at aileron well RH	1	KL	
-70	209-58818-19	LINE ASSEMBLY, No. 2 flight control system return from union at BL 20 LH to reducer at aileron well LH	1	DC	
	209-58818-51	LINE ASSEMBLY, No. 2 flight control system return from union at BL 20 LH to reducer at aileron well LH	1	JW	
	209-58818-75	LINE ASSEMBLY, No. 2 flight control system return from union at BL 20 LH to reducer at aileron well LH	1	HZ	
	209-58828-7	LINE ASSEMBLY, No. 2 flight control system return from union at BL 20 LH to reducer at aileron well LH	1	KL	
-71	209-58818-21	LINE ASSEMBLY, No. 2 flight control system return from tee at BL 20 RH to reducer at aileron well RH	1	DC	
	209-58818-53	LINE ASSEMBLY, No. 2 flight control system return from tee at BL 20 RH to reducer at aileron well RH	1	JW	
	209-58818-77	LINE ASSEMBLY, No. 2 flight control system return from tee at BL 20 RH to reducer at aileron well RH	1	HZ	
	209-58828-9	LINE ASSEMBLY, No. 2 flight control system return from union at BL 20 RH to reducer at aileron well RH	1	KL	
-72	MS21916D6-4	REDUCER	4		
-73	209-58864-51	LINE ASSEMBLY, No. 2 flight control system pressure from check valve on floor LH to union on rear spar station 129	1	FR	
	209-58844-51	LINE ASSEMBLY, No. 2 flight control system pressure from union on rear spar station 129 to check valve in manifold LH	1	DC	
	209-58854-35	LINE ASSEMBLY, No. 2 flight control system pressure from reducer LH rear spar station 129 to check valve in manifold LH	1	JW	
-74	209-58864-53	LINE ASSEMBLY, No. 2 flight control system pressure from check valve on floor RH to union on rear spar station 129	1	FR	
	209-58844-53	LINE ASSEMBLY, No. 2 flight control system pressure from union on rear spar station 129 to check valve in manifold RH	1	DC	
	209-58854-37	LINE ASSEMBLY, No. 2 flight control system pressure from reducer RH spar station 129 to check valve in manifold RH	1	JW	
-75	209-58864-3	LINE ASSEMBLY, No. 2 flight control system return from adapter on flex hose bracket LH to union on rear spar station 129	1	FR	
	209-58844-55	LINE ASSEMBLY, No. 2 flight control system return from union on rear spar station 129 to union in manifold LH	1	DC	
	209-58854-39	LINE ASSEMBLY, No. 2 flight control return from reducer LH rear spar station 129 to check valve in manifold	1	JW	
-76	209-58864-5	LINE ASSEMBLY, No. 2 flight control system return from adapter on flex hose bracket RH to union on rear spar station 129	1	FR	
	209-58844-57	LINE ASSEMBLY, No. 2 flight control system return from union on rear spar station 129 to union in manifold RH	1	DC	
	209-58854-41	LINE ASSEMBLY, No. 2 flight control return from reducer RH rear spar station 129 to union in manifold	1	JW	
-77	209-58864-47	LINE ASSEMBLY, No. 2 flight control system pressure from elbow on flex hose bracket LH to check valve on floor	1	FR	
-78	209-58864-49	LINE ASSEMBLY, No. 2 flight control system pressure from elbow on flex hose bracket RH to check valve on floor	1	FR	
-79	AN6280-4	VALVE	1	FR	
	AN6290-4	GASKET	2	FR	
	MS21902-4D	UNION	2	FR	
-80	209-58797-3	BRACKET ASSEMBLY, Aileron actuator flex hose support LH	1	FR	
-81	209-58797-4	BRACKET ASSEMBLY, Aileron actuator flex hose support RH	1	FR	
-82	209-523161-1	BRACE, Aileron control hose support bracket aft LH	1	FR	
-83	209-523161-2	BRACE, Aileron control hose support bracket aft RH	1	FR	
	ATTACHING PARTS				
	AN509-10R12	SCREW	1	FR	
	2W18-10	WASHER, Flat (NA) (89372)	1	FR	
	AN365-1032	NUT	1	FR	
	---*---				
-84	209-523160-1	BRACE, Aileron control hose support bracket forward LH	1	FR	
-85	209-523160-2	BRACE, Aileron control hose support bracket forward RH	1	FR	
	ATTACHING PARTS				
	AN520-10R10	SCREW	1	FR	
	AN520-10R12	SCREW	1	FR	
	2W18-10	WASHER, Flat (NA) (89372)	2	FR	
	AN365-1032	NUT	2	FR	
	---*---				
		HYDRAULIC FLIGHT CONTROL MANIFOLD SUPPORT ASSEMBLY (see figure 133 for breakdown)			
-86	MS28751-4-0274	HOSE ASSEMBLY (No. 2 system pressure) (high pressure)	1	EX	
	209-58773-5	HOSE ASSEMBLY, Hydraulic plastic covered (No. 2 system pressure)	1	LR	
	MS28751-4-0274	. HOSE ASSEMBLY	1	LR	
	3H3C6-0274	. HOSE COVER, Plastic (NA) (89372)	1	LR	
	209-58773-11	HOSE ASSEMBLY, Hydraulic plastic covered (No. 2 system pressure)	1	FR	
	MS28751-4-0190	. HOSE ASSEMBLY	1	FR	
	3H3C6-0190	. HOSE COVER, Plastic (NA) (89372)	1	FR	
-87	MS28751-4-0200	HOSE ASSEMBLY (No. 2 system return) (high pressure)	1	EX	

NO. 2 FLIGHT CONTROL AND EMERGENCY SYSTEM

FIGURE & INDEX NO.	PART NUMBER	1 2 3 4 5 6 7 NOMENCLATURE	UNITS PER ASSY.	USABLE ON CODE	S/C NO.
125	209-58773-3	HOSE ASSEMBLY, Hydraulic plastic covered (No. 2 system return)	1	LR	
	MS28751-4-0220	. HOSE ASSEMBLY	1	LR	
	3H3C6-0220	. HOSE COVER, Plastic (NA) (89372)	1	LR	
	209-58773-9	HOSE ASSEMBLY, Hydraulic plastic covered (No. 2 system return)	1	FR	
	MS28751-4-0140	. HOSE ASSEMBLY	1	FR	
	3H3C6-0140	. HOSE COVER, Plastic (NA) (89372)	1	FR	
-88	209-58705	ACTUATOR ASSEMBLY, Hydraulic aileron flight control (see figure 128 for complete breakdown)	1		
-89	209-58736	LINK ASSEMBLY, Aileron flight control valve aft (see Surface and Secondary Controls)	1		
-90	209-58729-11	BOLT, Hydraulic aileron flight control fitting	1		
	2W18-516	WASHER, Flat (NA) (89372)	1		
	AN365-524	NUT	1		
-91	209-58708	BOLT, Hydraulic aileron flight control rod end	1		
	2W18-1416	WASHER, Flat (NA) (89372) (use under bolthead)	1	ET	
	2W1-57-48-125	WASHER, Plain (NA) (89372) (use under nut)	1	ET	
	2W1AL57-48-090	WASHER, Plain (NA) (89372) (use under bracket)	1	FR	
	AN310-12	NUT	2		
-92	209-58807-55	LINE ASSEMBLY, Emergency control system suction from union station 156 to elbow fuselage station 181	1	HA	
	209-58807-61	LINE ASSEMBLY, Emergency control system suction from union station 156 to elbow fuselage station 181	1	FR	
-93	209-58807-57	LINE ASSEMBLY, Emergency control system pressure from union station 156 to union fuselage station 180	1	BK	
-94	MS21902D6	UNION	1	BK	
-95	MS21902D12	UNION	1	BK	
-96	209-58866-21	LINE ASSEMBLY, Emergency control system pressure from bulkhead union station 127 to union station 157.5	1	BK	
-97	209-58866-29	LINE ASSEMBLY, Emergency control system suction from bulkhead union station 127 to union station 158	1	HA	
	209-58866-71	LINE ASSEMBLY, Emergency control system suction from union station 127 to union station 158	1	FR	
-98	MS21903D12	UNION	1	BK	
	AN924-12D	NUT	1	BK	
-99	MS21903D6	UNION	1	BK	
-100	209-58866-19	LINE ASSEMBLY, Emergency control system pressure from union station 84 to bulkhead union station 127	1	BK	
-101	209-58866-27	LINE ASSEMBLY, Emergency control system suction from elbow station 85 to bulkhead union station 127	1	LV	
	209-58866-65	LINE ASSEMBLY, Emergency control system suction from elbow station 85 to bulkhead union station 71.75	1	GY	
	209-58866-69	LINE ASSEMBLY, Emergency control system suction from elbow station 85 to bulkhead union station 127	1	FR	
-102	MS21902D12	UNION	1	BK	
-103	MS21902D6	UNION	1	BK	
-104	209-58866-51	LINE ASSEMBLY, Emergency control system pressure from bulkhead union station 81.296 to union station 84	1	BK	489
-105	209-58866-55	LINE ASSEMBLY, Emergency control system suction from bulkhead union station 81.296 to union station 115	1	BK	489
-106	MS21903D12	UNION	2	BK	
	2W18-1716M	WASHER, Flat (NA) (89372)	2	BK	
	AN924-12D	NUT	2	BK	
-107	MS21903D6	UNION	2	BK	
	2W18-916M	WASHER, Flat (NA) (89372)	2	BK	
	AN924-6D	NUT	2	BK	
-108	209-58866-49	LINE ASSEMBLY, Emergency control system pressure from bulkhead union station 71.75 to bulkhead union station 81.296	1	BK	
-109	209-58866-53	LINE ASSEMBLY, Emergency control system suction from bulkhead union station 71.75 to bulkhead union station 81.296	1	BK	
-110	209-58866-7	LINE ASSEMBLY, Emergency control system pressure from bulkhead elbow fuselage station 43.062 to bulkhead union station 71.75	1	BK	
-111	209-58866-13	LINE ASSEMBLY, Emergency control system suction from bulkhead 45° elbow station 49.375 to bulkhead union station 71.75	1	HA	
	209-58866-67	LINE ASSEMBLY, Emergency control system suction from bulkhead 45° elbow station 49.375 to bulkhead union station 71.75	1	FR	
-112	MS21907-12D	ELBOW	1	BK	
	2W18-1716	WASHER, Flat (NA) (89372)	1	BK	
	AN924-12D	NUT	1	BK	
-113	MS21907-6D	ELBOW	1	BK	
	2W18-916	WASHER, Flat (NA) (89372)	1	BK	
	AN924-6D	NUT	1	BK	
-114	209-58866-39	LINE ASSEMBLY, Emergency control system pressure from swivel fitting to bulkhead 45° elbow station 43.062	1	BK	
-115	209-58866-35	LINE ASSEMBLY, Emergency control system suction from swivel fitting to bulkhead elbow station 49.355	1	HA	
	209-58866-73	LINE ASSEMBLY, Emergency control system suction from swivel fitting to bulkhead elbow station 49.355	1	FR	
-116	MS21916D12-8	REDUCER	1	BK	
-117	209-58866-57	LINE ASSEMBLY, Emergency control system suction from swivel fitting to reducer fitting station 49	1	BK	
-118	209-58614-1	HYDRAULIC EQUIPMENT ASSEMBLY, Swivel emergency flight control air turbine	1	BK	
-119	209-58614-2	HYDRAULIC EQUIPMENT ASSEMBLY, Swivel emergency flight control air turbine	1	BK	

NO. 2 FLIGHT CONTROL AND EMERGENCY SYSTEM

FIGURE & INDEX NO.	PART NUMBER	1 2 3 4 5 6 7 NOMENCLATURE	UNITS PER ASSY.	USABLE ON CODE	S/C NO.
125		ATTACHING PARTS			
	AN3-6A	BOLT	4	BK	
	2W18-416	WASHER, Flat (NA) (89372)	4	BK	
	AN365-1032	NUT	4	BK	
		---*---			
-120	114-J-100-1	. SWIVEL ASSEMBLY, Hydraulic 3000 psi (ALMA) (00672)	1	BK	
-121	AN6290-6	. GASKET	1	BK	
-122	MS21916D12-6	. REDUCER	1	BK	
-123	114-J-100-2	. SWIVEL ASSEMBLY, Hydraulic 3000 psi (ALMA) (00672)	1	BK	
-124	MS21002D6	. UNION	1	BK	
-125	209-58866-37	LINE ASSEMBLY, Emergency control system pressure from emergency pump to swivel fitting	1	BK	
-126	209-58866-33	LINE ASSEMBLY, Emergency control system suction from emergency pump to swivel fitting	1	BK	
-127	209-58666	HYDRAULIC EQUIPMENT ASSEMBLY, Pump emergency flight control turbine	1	BK	
		ATTACHING PARTS			
	AN174H11A	BOLT	4	BK	
	2W18-416	WASHER, Flat (NA) (89372)	4	BK	
		---*---			
-128	44080	. PUMP, Turbine (AIR) (99193)	1	BK	
	AN6290-5	. GASKET	2	BK	
	MS21916D6-5	. REDUCER	2	BK	4
-129	209-520148	HANDLE, Turbine release control	1	BK	
-130	209-58333	GROMMET, Hydraulic station 155.906 RH	1	HA	

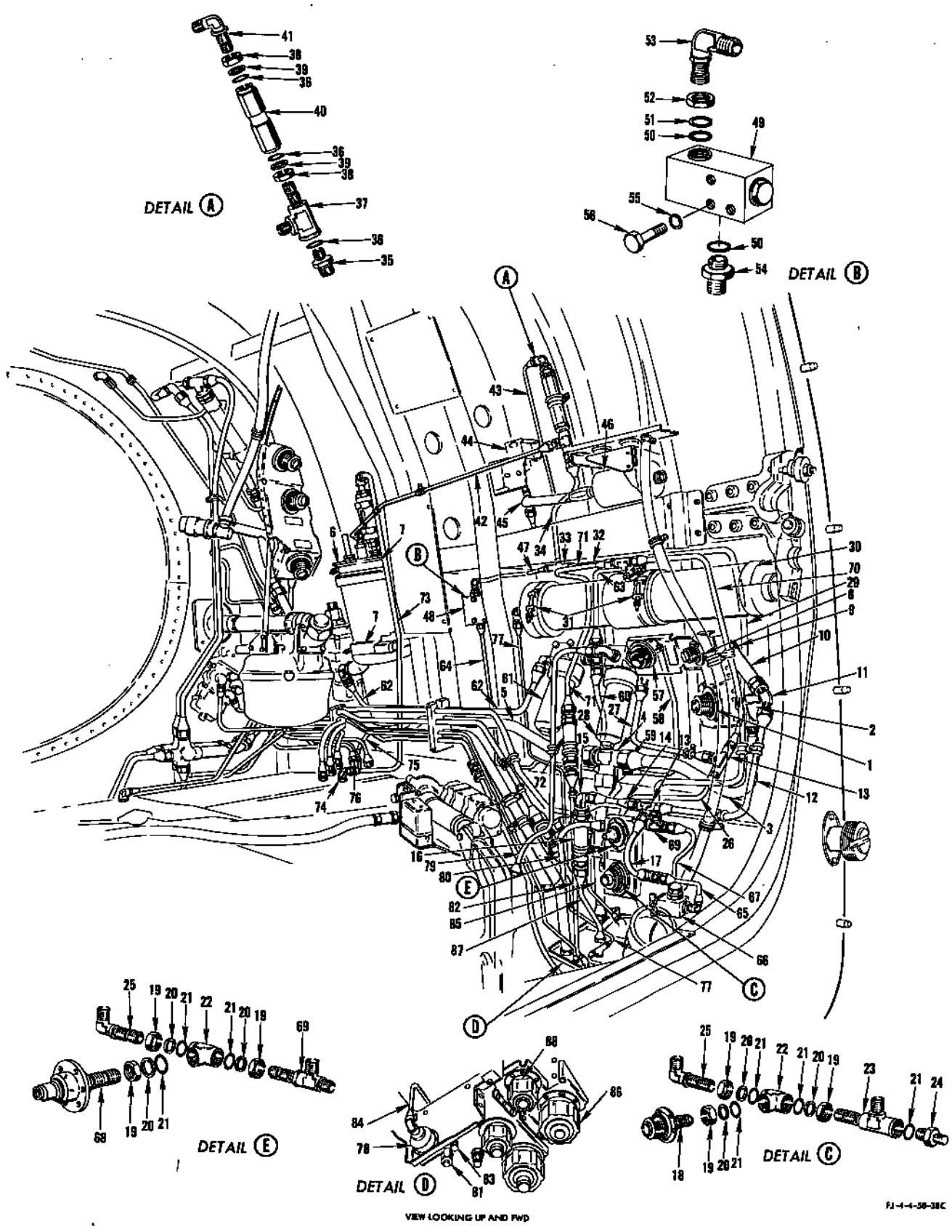

FIGURE 126 - NO. 2 FLIGHT CONTROL SYSTEM EQUIPMENT - APPLICABLE TO AIRCRAFT CODED (BJ)

NO. 2 FLIGHT CONTROL SYSTEM EQUIPMENT - APPLICABLE TO AIRCRAFT CODED (BJ)

FIGURE & INDEX NO.	PART NUMBER	1 2 3 4 5 6 7 NOMENCLATURE	UNITS PER ASSY.	USABLE ON CODE	S/C NO.
126-1	3005-S4-12D	COUPLING HALF, Hydraulic self sealing (AQ) (00624)	1	BJ	366
	ATTACHING PARTS				
	AN520-10R10	SCREW	3	BJ	366
	2W18-10	WASHER, Flat (NA) (89372)	6	BJ	366
	AN365-1032	NUT	3	BJ	366
	---*---				
	AN6290-12	GASKET	2	BJ	366
	AN6291-12	RING	1	BJ	366
	AN6289D12	NUT	1	BJ	366
-2	AN939D12	ELBOW	1	BJ	366
	MS21902D12	UNION	1	BJ	366
-3	209-58808-61	LINE ASSEMBLY, No. 2 flight control system suction from engine disconnect to tee fuselage station 220	1	BJ	366
-4	MS21905D12	TEE	1	BJ	366
-5	209-58808-63	LINE ASSEMBLY, No. 2 flight control system suction from tee fuselage station 220 to elbow in reservoir	1	BJ	366
-6	209-58653	NO. 2 FLIGHT CONTROL RESERVOIR ASSEMBLY (see figure 130 for breakdown)	1	BJ	366
	209-58302	SECTOR ASSEMBLY, Hydraulic flight control system reservoir support	1	BJ	366
	ATTACHING PARTS				
	AN3-12A	BOLT	4	BJ	366
	2W18-10M	WASHER, Flat (NA) (89372)	4	BJ	366
	---*---				
-7	325-62-606SH	CLAMP (MAR) (98625)	2	BJ	366
-8	3005-S4-6D	COUPLING HALF, Hydraulic self sealing (AQ) (00624)	1	BJ	366
	ATTACHING PARTS				
	AN520-10R10	SCREW	3	BJ	366
	2W18-10	WASHER, Flat (NA) (89372)	6	BJ	366
	AN365-1032	NUT	3	BJ	366
	---*---				
	AN6290-6	GASKET	4	BJ	366
	AN6291-6	RING	2	BJ	366
	AN6289-6	NUT	2	BJ	366
-9	AN939D6	ELBOW	1	BJ	366
	MS21902D6	UNION	1	BJ	366
-10	AN6280-6	VALVE	1	BJ	366
-11	MS21907D6	ELBOW	1	BJ	366
-12	209-58808-21	LINE ASSEMBLY, No. 2 flight control system pressure from elbow in check valve to tee fuselage station 228	1	BJ	366
-13	MS21905D6	TEE	2	BJ	366
-14	209-58808-19	LINE ASSEMBLY, No. 2 flight control system pressure from elbow in check valve to tee fuselage station 228	1	BJ	366
-15	MS21908D6	ELBOW	1	BJ	366
	AN6289-6	NUT	1	BJ	366
	AN6291-6	RING	1	BJ	366
	AN6290-6	GASKET	2	BJ	366
-16	AN6280-6	VALVE	1	BJ	366
	MS21902D6	UNION	1	BJ	366
-17	209-58808-17	LINE ASSEMBLY, No. 2 flight control system pressure from tee fuselage station 228 to tee in field break disconnect	1	BJ	366
-18	3005-S4-6D	COUPLING HALF, Self sealing (AQ) (00624)	1	BJ	366
	ATTACHING PARTS				
	AN520-10R10	SCREW	3	BJ	366
	2W18-10	WASHER, Flat (NA) (89372)	6	BJ	366
	AN365-1032	NUT	3	BJ	366
	---*---				
-19	AN6289-6	NUT	6	BJ	366
-20	AN6291-6	RING	6	BJ	366
-21	AN6290-6	GASKET	7	BJ	366
-22	AN938D6	TEE	2	BJ	366
-23	MS21911D6	TEE	1	BJ	366
-24	MS21916D6-4	REDUCER	1	BJ	366
-25	MS21908D6	ELBOW	2	BJ	366
-26	209-58808-25	LINE ASSEMBLY, No. 2 flight control system pressure from tee wl-12 to elbow at field break disconnect	1	BJ	366
-27	209-58808-29	LINE ASSEMBLY, No. 2 flight control system pressure from tee wl-12 elbow in filter	1	BJ	366
	209-58672	HYDRAULIC EQUIPMENT ASSEMBLY, No. 2 flight control system aileron filter	1	BJ	366
	ATTACHING PARTS				
	AN4-24A	BOLT	1	BJ	366
	AN4-25A	BOLT	1	BJ	366
	2W18-416	WASHER, Flat (NA) (89372)	2	BJ	366
	NAS43DD4-32	SPACER	2	BJ	366
	---*---				
-28	MS28720-6	. FILTER	1	BJ	366
	AN6290-6	. GASKET	2	BJ	366
	AN6291-6	. RING	2	BJ	366
	AN6289-6	. NUT	2	BJ	366
	MS21908D6	. ELBOW	2	BJ	366
-29	209-58808-27	LINE ASSEMBLY, No. 2 flight control system pressure from tee wl-12 to tee in accumulator	1	BJ	366
-30		NO. 2 FLIGHT CONTROL SYSTEM ACCUMULATOR (see figure 132 for breakdown)		BJ	366
	209-58249	SECTOR ASSEMBLY, Hydraulic flight control system accumulator support	1	BJ	366

NO. 2 FLIGHT CONTROL SYSTEM EQUIPMENT - APPLICABLE TO AIRCRAFT CODED (BJ)

FIGURE & INDEX NO.	PART NUMBER	1 2 3 4 5 6 7 NOMENCLATURE	UNITS PER ASSY.	USABLE ON CODE	S/C NO.
126		ATTACHING PARTS			
	AN3-12A	BOLT	2	BJ	366
	2W18-10M	WASHER, Flat (NA) (89372)	2	BJ	366
		---*---			
-31	325-62-444SH	CLAMP (MAR) (98625)	2	BJ	366
-32	209-58808-33	LINE ASSEMBLY, No. 2 flight control pressure from tee in engine beam to tee in accumulator	1	BJ	366
-33	MS21909D6	TEE	1	BJ	366
	2W18-916	WASHER, Flat (NA) (89372)	1	BJ	366
	AN924D6	NUT	1	BJ	366
-34	209-58808-37	LINE ASSEMBLY, No. 2 flight control system pressure from tee in engine beam to tee in snubber	1	BJ	366
-35	MS21916D6-4	REDUCER	1	BJ	366
-36	AN6290-4	GASKET	3	BJ	366
-37	MS21911D4	TEE	1	BJ	366
-38	AN6289-4	NUT	2	BJ	366
-39	AN6291-4	RING	2	BJ	366
-40	18D2	SNUBBER (OPS) (76906)	1	BJ	366
-41	MS21908D4	ELBOW	1	BJ	366
-42	209-58838-25	LINE ASSEMBLY, No. 2 flight control system pressure from elbow in reservoir to tee in snubber	1	BJ	366
-43	209-58808-39	LINE ASSEMBLY, No. 2 flight control system pressure from elbow in snubber to tee in pressure switch	1	BJ	366
	209-58646	HYDRAULIC EQUIPMENT ASSEMBLY, No. 2 flight control system switch	1	BJ	366, 445
		ATTACHING PARTS			
	AN3-17A	BOLT	2	BJ	366
	2W18-10	WASHER, Flat (NA) (89372)	4	BJ	366
	AN364-1032	NUT	2	BJ	366
		---*---			
-44	90000-2	. SWITCH, Hydraulic pressure (HYRM) (81873) (interchangeable with 106130-3 (LADM) (91864) or 4000-24 (Frebank Co.) (98087)	1	BJ	366
	AN6290-4	. GASKET	1	BJ	366
	AN6291-4	. RING	1	BJ	366
	AN6289-4	. NUT	1	BJ	366
	MS21912D4	. TEE	1	BJ	366, 445
-45	MS28751-4-0084	HOSE ASSEMBLY (pressure)	1	BJ	366
-46	209-58660-21	HYDRAULIC EQUIPMENT ASSEMBLY, No. 1 and No. 2 flight control system pressure transmitter utility	1	BJ	366
		ATTACHING PARTS			
	AN515-8R22	SCREW	4	BJ	366
		---*---			
	MS21902D4	. UNION	1	BJ	366
	AN6290-4	. GASKET	1	BJ	366
	209-51098-30	. SUPPORT ASSEMBLY, Hydraulic pressure transmitter (No. 2 flight control) (see Electrical and Instrument)	1	BJ	366
-47	209-58808-35	LINE ASSEMBLY, No. 2 flight control pressure from tee in engine beam	1	BJ	366
-48	209-58623	HYDRAULIC EQUIPMENT ASSEMBLY, No. 2 flight control system relief valve	1	BJ	366
-49	AN6279-6CD	. VALVE	1	BJ	366
-50	AN6290-6	. GASKET	2	BJ	366
-51	AN6291-6	. RING	1	BJ	366
-52	AN6289-6	. NUT	1	BJ	366
-53	MS21908D6	. ELBOW	1	BJ	366
-54	MS21902D6	. UNION	1	BJ	366
-55	2W18-10	WASHER, Flat (NA) (89372)	3	BJ	366
-56	AN3-22A	BOLT	3	BJ	366
-57	3005-S4-6D	COUPLING HALF, Hydraulic self sealing (AQ) (00624)	1	BJ	366
		ATTACHING PARTS			
	AN520-10R10	SCREW	3	BJ	366
	2W18-10	WASHER, Flat (NA) (89372)	6	BJ	366
	AN365-1032	NUT	3	BJ	366
		---*---			
	AN6290-6	GASKET	2	BJ	366
	AN6291-6	RING	1	BJ	366
	AN6289-6	NUT	1	BJ	366
	AN939D6	ELBOW	1	BJ	366
	MS21902D6	UNION	1	BJ	366
-58	209-58808-51	LINE ASSEMBLY, No. 2 flight control pump by-pass from elbow in engine disconnect to tee fuselage station 223	1	BJ	366
-59	MS21912D6	TEE	1	BJ	366
	2W18-916	WASHER, Flat (NA) (89372)	1	BJ	366
	AN924D6	NUT	1	BJ	366
-60	209-58808-53	LINE ASSEMBLY, No. 2 flight control system return from tee in filter to tee fuselage station 223	1	BJ	366
	209-58671	HYDRAULIC EQUIPMENT ASSEMBLY, No. 2 flight control system return filter	1	BJ	366
		ATTACHING PARTS			
	AN4-23A	BOLT	2	BJ	366
	2W18-416	WASHER, Flat (NA) (89372)	2	BJ	366
	NAS43DD4-32	SPACER	2	BJ	366
		---*---			
-61	MS28720-6	. FILTER	1	BJ	366
	AN6290-6	. GASKET	2	BJ	366
	AN6291-6	. RING	2	BJ	366
	AN6289-6	. NUT	2	BJ	366

NO. 2 FLIGHT CONTROL SYSTEM EQUIPMENT - APPLICABLE TO AIRCRAFT CODED (BJ)

FIGURE & INDEX NO.	PART NUMBER	1 2 3 4 5 6 7 NOMENCLATURE	UNITS PER ASSY.	USABLE ON CODE	S/C NO.
126	MS21908D6	. ELBOW	1	BJ	366
	MS21909D6	. TEE	1	BJ	366
-62	209-58808-57	LINE ASSEMBLY, No. 2 flight control system return from elbow in reservoir to elbow in filter	1	BJ	366
-63	209-58808-55	LINE ASSEMBLY, No. 2 flight control system return from tee in filter to elbow in accumulator	1	BJ	366
-64	209-58808-49	LINE ASSEMBLY, No. 2 flight control system return from union in relief valve to tee fuselage station 220.75	1	BJ	366
-65	209-58808-15	LINE ASSEMBLY, No. 2 flight control system pressure from tee in field break disconnect to elbow in dump valve	1	BJ	366
	209-58613	HYDRAULIC EQUIPMENT ASSEMBLY, No. 2 flight control system accumulator - dump valve	1	BJ	366
	ATTACHING PARTS				
	AN3-5A	BOLT	2	BJ	366
	2W18-10M	WASHER, Flat (NA) (89372)	2	BJ	366
	AN365-1032	NUT	2	BJ	366
	---*---				
-66	27600	. VALVE, Hydraulic main two way shut-off (HYRM) (81873) (interchangeable with 104465 (WTR) (94256) or 1375-559606 (PAET) (92003) and supersedes 10-1006 (PAET) (92003) for future procurement)	1	BJ	366
	AN6290-4	. GASKET	2	BJ	366
	AN6291-4	. RING	1	BJ	366
	AN6289-4	. NUT	1	BJ	366
	MS21916D6-4	. REDUCER	1	BJ	366
	MS21908D4	. ELBOW	1	BJ	366
-67	209-58808-23	. LINE ASSEMBLY, No. 2 flight control system return from tee in field break disconnect to union in dump valve	1	BJ	366
-68	6526N45C6	NIPPLE ASSEMBLY, 3/8 inch self-seal bayonet lock (WIG) (79326) (supersedes 6526K6 (WIG) (79326) for future procurement)	1	BJ	366
	ATTACHING PARTS				
	AN520-10R10	SCREW	3	BJ	366
	2W18-10	WASHER, Flat (NA) (89372)	6	BJ	366
	AN365-1032	NUT	3	BJ	366
	---*---				
-69	MS21912D6	TEE	1	BJ	366
-70	209-58808-43	LINE ASSEMBLY, No. 2 flight control system return from tee at field break to tee in accumulator	1	BJ	366
-71	209-58808-45	LINE ASSEMBLY, No. 2 flight control system return from tee in accumulator to valve fuselage station 221	1	BJ	366
-72	AN6280-6	VALVE	1	BJ	366
	AN6290-6	GASKET	2	BJ	366
	MS21902D6	UNION	2	BJ	366
-73	209-58808-59	LINE ASSEMBLY, No. 2 flight control reservoir overflow vent from elbow in sight gage to elbow in landing gear deck	1	BJ	366
-74	MS21908D6	ELBOW	1	BJ	366
	2W18-916	WASHER, Flat (NA) (89372)	1	BJ	366
	AN924D6	NUT	1	BJ	366
-75	209-58838-9	LINE ASSEMBLY, No. 2 flight control reservoir drain to 45° elbow fuselage station 192	1	BJ	366
-76	MS21907D4	ELBOW	1	BJ	366
	AN6289-4	NUT	1	BJ	366
	AN6291-4	RING	1	BJ	366
	AN6290-4	GASKET	2	BJ	366
	AN939-4D	ELBOW	1	BJ	366
	AN832-4D	UNION	1	BJ	366
	AN924-4D	NUT	1	BJ	366
-77	209-58808-13	LINE ASSEMBLY, No. 2 flight control accumulator air pressure from 90° elbow in accumulator to bulkhead tee on external disconnect panel	1	BJ	366
	MS21908D4	ELBOW	1	BJ	366
	AN6290-4	GASKET	1	BJ	366
	AN6291-4	RING	1	BJ	366
	AN6289-4	NUT	1	BJ	366
-78	AN5771T7A	GAGE	1	BJ	366
	ATTACHING PARTS				
	AN515-6R12	SCREW	4	BJ	366
	2W18-6M	WASHER, Flat (NA) (89372)	8	BJ	366
	AN365-1032	NUT	4	BJ	366
	---*---				
-79	209-58824-49	LINE ASSEMBLY, No. 2 flight control system pressure from elbow in filter fuselage station 221 to elbow station 215	1	BJ	366
-80	209-58824-51	LINE ASSEMBLY, No. 2 flight control system return from elbow fuselage station 224 to elbow station 215	1	BJ	366
-81	181-58370	CAP ASSEMBLY, Hydraulic flared tube fitting	1	BJ	366
	AN924-6D	NUT	1	BJ	366
	AN832-6D	UNION	1	BJ	366
	AN6290-6	GASKET	2	BJ	366
	AN939D6	ELBOW	1	BJ	366
	MS21902D6	UNION	1	BJ	366
-82	209-58824-45	LINE ASSEMBLY, No. 2 flight control system reservoir fill from elbow fuselage station 224.5 to union station 218	1	BJ	366
-83	AN6287-1	VALVE	1	BJ	366
	194-58315	ADAPTER, Hydraulic accumulator air valve	1	BJ	366
	AN924-10D	NUT	1	BJ	366

NO. 2 FLIGHT CONTROL SYSTEM EQUIPMENT - APPLICABLE TO AIRCRAFT CODED (BJ)

FIGURE & INDEX NO.	PART NUMBER	1 2 3 4 5 6 7 NOMENCLATURE	UNITS PER ASSY.	USABLE ON CODE	S/C NO.
126	2W18-1416	WASHER, Flat (NA) (89372)	1	BJ	366
	AN6290-4	GASKET	1	BJ	366
	AN6291-4	RING	1	BJ	366
	AN6289-4	NUT	1	BJ	366
	MS21909-4D	TEE	1	BJ	366
-84	209-58824-47	LINE ASSEMBLY, No. 2 flight control system accumulator air pressure from elbow fuselage station 225 to elbow station 227	1	BJ	366
-85	209-58824-57	LINE ASSEMBLY, No. 2 flight control system suction from tee fuselage station 220.75 to quick disconnect station 220.75	1	BJ	366
-86	3055-S11-12D	COUPLING HALF AND DUST CAP ASSEMBLY (AQ) (00624)	1	BJ	366
	ATTACHING PARTS				
	AN520-10R10	SCREW	3	BJ	366
	2W18-10M	WASHER, Flat (NA) (89372)	6	BJ	366
	AN365-1032	NUT	3	BJ	366
	---*---				
-87	209-58824-63	LINE ASSEMBLY, No. 2 flight control system pressure from elbow fuselage station 225 to elbow station 220.45	1	BJ	366
-88	3055-S11-6D	COUPLING HALF AND DUST CAP ASSEMBLY (AQ) (00624)	1	BJ	366
	ATTACHING PARTS				
	AN520-10R10	SCREW	3	BJ	366
	2W18-10M	WASHER, Flat (NA) (89372)	6	BJ	366
	AN365-1032	NUT	3	BJ	366
	---*---				
	MS21902D6	UNION	1	BJ	366
	AN6290-6	GASKET	2	BJ	366
	AN941-6D	ELBOW	1	BJ	366
	AN6289-6	NUT	1	BJ	366
	AN6291-6	RING	1	BJ	366

NO. 2 AND EMERGENCY FLIGHT CONTROL SYSTEM EQUIPMENT - APPLICABLE TO AIRCRAFT CODED (BK)

FIGURE & INDEX NO.	PART NUMBER	1 2 3 4 5 6 7 NOMENCLATURE	UNITS PER ASSY.	USABLE ON CODE	S/C NO.
127-1	3005-S4-12D	COUPLING HALF, Hydraulic self-sealing (AQ) (00624)	1	BK	
	ATTACHING PARTS				
	AN502-10R10	SCREW	3	BK	
	2W18-10	WASHER, Flat (NA) (89372)	6	BK	
	AN365-1032	NUT	3	BK	
	---*---				
	AN6290-12	GASKET	2	BK	
	AN6291-12	RING	1	BK	
	AN6289D12	NUT	1	BK	
-2	AN939D12	ELBOW	1	BK	
	MS21902D12	CROSS	1	BK	
-3	209-58838-57	LINE ASSY, No. 2 flight control suction from cross at sta 220 to elbow at sta 232	1	HA	
	209-58868-3	LINE ASSY, No. 2 flight control suction from cross at sta 220 to elbow at sta 232	1	FR	
-4	MS21906D12	CROSS	1	BK	
-5	209-58838-59	LINE ASSEMBLY, No. 2 flight control suction from elbow on reservoir at station 197 to cross at station 220	1	HA	
	209-58868-5	LINE ASSEMBLY, No. 2 flight control suction from elbow on reservoir at station 197 to cross at station 220	1	FR	
-6	209-58653	HYDRAULIC EQUIPMENT ASSEMBLY, No. 2 flight control system reservoir (see figure 130 for complete breakdown)	1	BK	
	209-58032	SECTOR ASSEMBLY, Hydraulic flight control system reservoir support	2	BK	
	ATTACHING PARTS				
	AN3-12A	BOLT	4	BK	
	2W18-10M	WASHER, Flat (NA) (89372)	4	BK	
	---*---				
-7	325-62-606SH	CLAMP (MAR) (98625)	2	BK	
-8	3005-S4-6D	COUPLING HALF, Hydraulic self-sealing (AQ) (00624)	1	BK	
	ATTACHING PARTS				
	AN520-10R10	SCREW	3	BK	
	2W18-10	WASHER, Flat (NA) (89372)	6	BK	
	AN325-1032	NUT	3	BK	
	---*---				
	AN6290-6	GASKET	4	BK	
	AN6291-6	RING	2	BK	
	AN6289-6	NUT	2	BK	
-9	AN939D6	ELBOW	1	BK	
	MS21902D6	UNION	1	BK	
-10	AN6280-6	VALVE	1	BK	
-11	MS21907D6	ELBOW	1	BK	
-12	209-58808-21	LINE ASSEMBLY, No. 2 flight control system pressure from elbow in check valve to tee fuselage station 228	1	BK	
-13	MS21905D6	TEE	2	BK	
-14	209-58808-19	LINE ASSEMBLY, No. 2 flight control system pressure from elbow in check valve to tee fuselage station 228	1	BK	
-15	MS21908D6	ELBOW	1	BK	
	AN6289-6	NUT	1	BK	
	AN6291-6	RING	1	BK	
	AN6290-6	GASKET	2	BK	
-16	AN6280-6	VALVE	1	BK	
	MS21902D6	UNION	1	BK	
-17	209-58808-17	LINE ASSEMBLY, No. 2 flight control system pressure from tee fuselage station 228 to tee in field break disconnect	1	BK	
-18	3005-S4-5D	COUPLING HALF, Self-sealing (AQ) (00624)	1	BK	
	ATTACHING PARTS				
	AN520-10R10	SCREW	3	BK	
	2W18-10	WASHER, Flat (NA) (89372)	6	BK	
	AN365-1032	NUT	3	BK	
	---*---				
-19	AN6289-6	NUT	3	BK	
-20	AN6291-6	RING	3	BK	
-21	AN6290-6	GASKET	4	BK	
-22	AN938D6	TEE	1	BK	
-23	MS21911D6	TEE	1	BK	
-24	MS21916D6-4	REDUCER	1	BK	
	MS21908D6	ELBOW	1	FR	
	AN6289-6	NUT	1	FR	
	AN6291-6	RING	1	FR	
-25	MS21908D6	ELBOW	1	BK	
-26	209-58808-25	LINE ASSEMBLY, No. 2 flight control system pressure from tee wl-12 to elbow at field break disconnect	1	BK	
-27	209-58808-29	LINE ASSEMBLY, No. 2 flight control system pressure from tee wl-12 to elbow in filter	1	BK	
	209-58672	HYDRAULIC EQUIPMENT ASSEMBLY, No. 2 flight control system aileron filter	1	BK	
	ATTACHING PARTS				
	AN4-24A	BOLT	1	BK	
	AN4-25A	BOLT	1	BK	
	2W18-416	WASHER, Flat (NA) (89372)	2	BK	
	NAS43DD4-32	SPACER	2	BK	
	---*---				
-28	MS28720-6	. FILTER (see figure 169 for breakdown)	1	BK	
	AN6290-6	. GASKET	2	BK	
	AN6291-6	. RING	2	BK	
	AN6289-6	. NUT	2	BK	

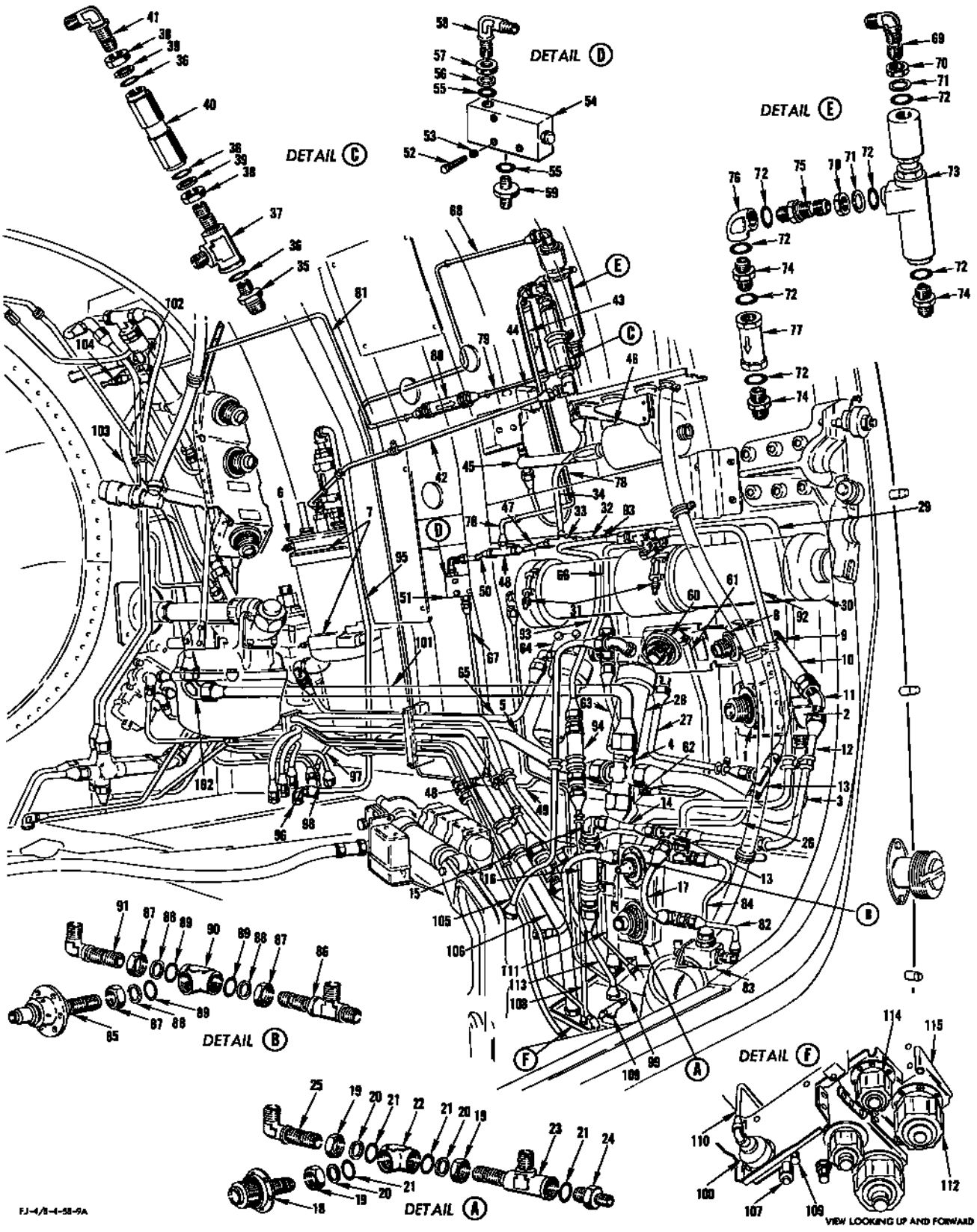

FIGURE 127 - NO. 2 EMERGENCY FLIGHT CONTROL SYSTEM EQUIPMENT - APPLICABLE TO AIRCRAFT CODED (BK)

NO. 2 AND EMERGENCY FLIGHT CONTROL SYSTEM EQUIPMENT - APPLICABLE TO AIRCRAFT CODED (BK)

FIGURE & INDEX NO.	PART NUMBER	1 2 3 4 5 6 7 NOMENCLATURE	UNITS PER ASSY.	USABLE ON CODE	S/C NO.
127	MS21908D6	. ELBOW	2	BK	
-29	209-58808-27	LINE ASSEMBLY, No. 2 flight control system pressure from tee wl-12 to tee in accumulator	1	BK	
-30	209-58694	HYDRAULIC EQUIPMENT ASSEMBLY, No. 2 flight control system accumulator - (see figure 132 for complete breakdown)	1	BK	
	209-58249	SECTOR ASSEMBLY, Hydraulic flight control system accumulator support	1	BK	
	ATTACHING PARTS				
	AN3-12A	BOLT	2	BK	
	2W18-10M	WASHER, Flat (NA) (89372)	2	BK	
	---*---				
-31	325-62-444SH	CLAMP (MAR) (98625)	2	BK	
-32	209-58808-33	LINE ASSEMBLY, No. 2 flight control pressure from tee in engine beam to tee in accumulator	1	BK	
-33	MS21909D6	TEE	1	BK	
	2W18-916	WASHER, Flat (NA) (89372)	1	BK	
	AN924D6	NUT	1	BK	
-34	209-58838-55	LINE ASSEMBLY, No. 2 flight control pressure from tee at station 216 to tee on snubber at station 219	1	HA	
	209-58838-75	LINE ASSEMBLY, No. 2 flight control pressure from tee at station 216 to tee on snubber at station 213	1	FR	
-35	MS21916D6-4	REDUCER	1	BK	
-36	AN6290-4	GASKET	3	BK	
-37	MS21911D4	TEE	1	HA	
	MS21910D4	TEE	1	FR	
-38	AN6289-4	NUT	2	BK	
-39	AN6291-4	RING	2	BK	
-40	18D2	SNUBBER (OPS) (76906)	1	BK	
-41	MS21908D4	ELBOW	1	BK	
-42	209-58838-53	LINE ASSEMBLY, No. 2 flight control pressure from tee on snubber at station 219 to elbow on reservoir at station 197	1	HA	
	209-58838-73	LINE ASSEMBLY, No. 2 flight control pressure from tee on snubber at station 213 to elbow on reservoir at station 197	1	FR	
-43	209-58838-51	LINE ASSEMBLY, No. 2 flight control pressure from elbow on snubber at station 219 to tee on pressure switch at station 214	1	EF	
	209-58838-63	LINE ASSEMBLY, No. 2 flight control pressure from elbow on snubber at station 219 to tee on pressure switch at station 214	1	FX	
	209-58646	HYDRAULIC EQUIPMENT ASSEMBLY, No. 2 flight control system switch	1	HA	445
	ATTACHING PARTS				
	AN3-17A	BOLT	2	HA	445
	2W18-10	WASHER, Flat (NA) (89372)	4	HA	445
	AN364-1032	NUT	2	HA	445
	---*---				
-44	90000-2	. SWITCH, Hydraulic pressure (HYRM) (81873) (interchangeable with 106130-3 (LADM) (91864) or 4000-24 (Frebank Co) (98087)	1	HA	
	AN6290-4	. GASKET	1	HA	
	AN6291-4	. RING	1	HA	
	AN6289-4	. NUT	1	HA	
	MS21912D4	. TEE	1	HA	445
-45	MS28751-4-0084	HOSE ASSEMBLY (pressure)	1	BK	
-46	209-58660-21	HYDRAULIC EQUIPMENT ASSEMBLY, No. 1 and No. 2 flight control and utility pressure transmitter	1	BK	
	ATTACHING PARTS				
	AN515-8R22	SCREW	4	BK	
	---*---				
	MS21902D4	. UNION	1	BK	
	AN6290-4	. GASKET	1	BK	
	209-51008-30	. SUPPORT ASSEMBLY, Hydraulic transmitter complete (see Electrical and Instrument)	1	BK	
-47	209-58838-47	LINE ASSEMBLY, No. 2 flight control pressure from tee at station 216 to tee at station 210	1	BK	
-48	MS21905D6	TEE	2	BK	
-49	209-58838-43	LINE ASSEMBLY, No. 2 flight control return from tee at station 209 to tee at station 220	1	BK	
-50	209-58838-49	LINE ASSEMBLY, No. 2 flight control pressure from tee at station 210 to elbow on relief valve at station 208	1	BK	
-51	209-58623-11	HYDRAULIC EQUIPMENT ASSEMBLY, Valve flight control system	1	BK	
	ATTACHING PARTS				
-52	AN3-22A	BOLT	3	BK	
-53	2W18-10	WASHER, Flat (NA) (89372)	3	BK	
	---*---				
-54	AN6279-6CD	. VALVE	1	BK	
-55	AN6290-6	. GASKET	2	BK	
-56	AN6291-6	. RING	1	BK	
-57	AN6289-6	. NUT	1	BK	
-58	MS21908D6	. ELBOW	1	BK	
-59	MS21902D6	. UNION	1	BK	
-60	3005-S4-6D	COUPLING HALF, Hydraulic self-sealing (AQ) (00624)	1	BK	
	ATTACHING PARTS				
	AN520-10R10	SCREW	3	BK	
	2W18-10	WASHER, Flat (NA) (89372)	6	BK	
	AN365-1032	NUT	3	BK	
	---*---				

NO. 2 AND EMERGENCY FLIGHT CONTROL SYSTEM EQUIPMENT - APPLICABLE TO AIRCRAFT CODED (BK)

FIGURE & INDEX NO.	PART NUMBER	1 2 3 4 5 6 7 NOMENCLATURE	UNITS PER ASSY.	USABLE ON CODE	S/C NO.
127	AN6290-6	GASKET	2	BK	
	AN6291-6	RING	1	BK	
	AN6289-6	UNIT	1	BK	
	AN939D6	ELBOW	1	BK	
	MS21902D6	UNION	1	BK	
-61	209-58808-51	LINE ASSEMBLY, No. 2 flight control pump by-pass from elbow in engine disconnect to tee fuselage station 223	1	BK	
-62	MS21912D6	TEE	1	BK	
	2W18-916	WASHER, Flat (NA) (89372)	1	BK	
	AN924D6	NUT	1	BK	
-63	209-58808-53	LINE ASSEMBLY, No. 2 flight control system return from elbow in engine disconnect to tee fuselage station 223	1	BK	
	209-58671	HYDRAULIC EQUIPMENT ASSEMBLY, No. 2 flight control system return filter	1	BK	
	ATTACHING PARTS				
	AN4-23A	BOLT	2	BK	
	2W18-416	WASHER, Flat (NA) (89372)	2	BK	
	NAS43DD4-32	SPACER	2	BK	
	---*---				
-64	MS28720-6	. FILTER (see figure 169 for breakdown)	1	BK	
	AN6290-6	. GASKET	2	BK	
	AN6291-6	. RING	2	BK	
	AN6289-6	. NUT	2	BK	
	MS21908D6	. ELBOW	1	BK	
	MS21909D6	. TEE	1	BK	
-65	209-58808-57	LINE ASSEMBLY, No. 2 flight control system return from elbow in reservoir to elbow in filter	1	BK	
-66	209-58808-55	LINE ASSEMBLY, No. 2 flight control system return from tee in filter to elbow in filter	1	BK	
-67	209-58838-45	LINE ASSEMBLY, No. 2 flight control return from union on relief valve at station 208 to tee at station 209	1	BK	
-68	209-58838-41	LINE ASSEMBLY, No. 2 flight control return from elbow on pressure sensing regulator at station 219 to tee at station 209	1	MC	
	209-58868-11	LINE ASSEMBLY, No. 2 flight control return from elbow on pressure sensing regulator at station 219 to tee at station 209	1	FL	
	209-58676	HYDRAULIC EQUIPMENT ASSEMBLY, Regulator emergency flight control flow sensing	1	HA	
	209-58676-11	HYDRAULIC EQUIPMENT ASSEMBLY, Regulator emergency flight control flow sensing	1	FR	
-69	MS21908D6	. ELBOW	1	BK	
-70	AN6289-6	. NUT	2	BK	
-71	AN6291-6	. RING	2	BK	
-72	AN6290-6	. GASKET	7	BK	
-73	EA-50002-8A	. REGULATOR, Flow sensitive pressure (VI) (62983) (interchangeable with AFS-6-07 (PANT) (45598)	1	BK	
-74	MS21902D6	. UNION	3	BK	
-75	MS21903D6	. UNION	1	BK	
-76	AN939-6D	. ELBOW	1	BK	
-77	AN6280-6	. VALVE	1	BK	
-78	209-58838-39	LINE ASSEMBLY, No. 2 flight control pressure check valve at station 216 to tee at station 210	1	HA	
	209-58838-93	LINE ASSEMBLY, No. 2 flight control pressure check valve at station 216 to tee at station 210	1	FR	
-79	209-58838-35	LINE ASSEMBLY, Emergency pressure from check valve at station 209 to flow sensing regulator at station 219	1	BK	
-80	AN6280-6	VALVE	1	BK	
	MS21902D6	UNION	2	BK	
	AN6290-6	GASKET	2	BK	
-81	209-58838-33	LINE ASSEMBLY, Emergency pressure from union at station 181 to check valve at station 209	1	BK	
-82	209-58808-15	LINE ASSEMBLY, No. 2 flight control system pressure from tee in field break disconnect to elbow in dump valve	1	HA	
	209-58838-89	LINE ASSEMBLY, No. 2 flight control system pressure from elbow in field break disconnect to reducer in dump valve	1	FR	
	209-58613	HYDRAULIC EQUIPMENT ASSEMBLY, No. 2 flight control system accumulator dump valve	1	HA	
	209-58613-13	HYDRAULIC EQUIPMENT ASSEMBLY, No. 2 flight control system accumulator dump valve	1	FR	
	ATTACHING PARTS				
	AN3-5A	BOLT	2	BK	
	2W18-10M	WASHER, Flat (NA) (89372)	4	BK	
	AN365-1032	NUT	2	BK	
	---*---				
-83	27600	. VALVE, Hydraulic main two-way shut-off (HYRM) (81873) (interchangeable with 104465 (WTR) (94256) or 1375-559606 (PAET) (92003)) (10-1006 (PAET) (92003) inactive for future procurement)	1	BK	
	AN6290-4	. GASKET	2	BK	
	AN6291-4	. RING	1	BK	
	AN6289-4	. NUT	1	BK	
	MS21916D6-4	. REDUCER	1	BK	
	MS21908D4	. ELBOW	1	BK	
-84	209-58808-23	LINE ASSEMBLY, No. 2 flight control system return from tee in field break disconnect to union in dump valve	1	HA	

NO. 2 AND EMERGENCY FLIGHT CONTROL SYSTEM EQUIPMENT - APPLICABLE TO AIRCRAFT CODED (BK)

FIGURE & INDEX NO.	PART NUMBER	1 2 3 4 5 6 7 NOMENCLATURE	UNITS PER ASSY.	USABLE ON CODE	S/C NO.
127	209-58838-83	LINE ASSEMBLY, No. 2 flight control system return from tee in field break disconnect to elbow in dump valve	1	FR	
-85	6526N45C6	NIPPLE ASSEMBLY, 3/8-inch self-seal bayonet lock (WIG) (79326) (supersedes 6526K6 (WIG) (79326) for future procurement)	1	BK	
	ATTACHING PARTS				
	AN520-10R10	SCREW	3	BK	
	2W18-10	WASHER, Flat (NA) (89372)	6	BK	
	AN365-1032	NUT	3	BK	
	---*---				
-86	MS21912D6	TEE	1	HA	
	MS21911D6	TEE	1	FR	
	AN6290-6	GASKET	1	FR	
	MS21916D6-4	REDUCER	1	FR	
-87	AN6289-6	NUT	3	BK	
-88	AN6291-6	RING	3	BK	
-89	AN6290-6	GASKET	3	BK	
-90	AN938D6	TEE	1	BK	
-91	MS21908D6	ELBOW	1	BK	
-92	209-58808-43	LINE ASSEMBLY, No. 2 flight control system return from tee at field break to tee in accumulator	1	HA	
	209-58838-91	LINE ASSEMBLY, No. 2 flight control system return from tee at field break to tee in accumulator	1	FR	
-93	209-58808-45	LINE ASSEMBLY, No. 2 flight control system return from tee in accumulator to valve fuselage station 221	1	BK	
-94	AN6280-6	VALVE	1	BK	
	AN6290-6	GASKET	2	BK	
	MS21902D6	UNION	2	BK	
-95	209-58808-59	LINE ASSEMBLY, No. 2 flight control reservoir overflow vent from elbow in sight gage to elbow in landing gear deck	1	BK	
-96	MS21908D6	ELBOW	1	BK	
	2W18-916	WASHER, Flat (NA) (89372)	1	BK	
	AN924D6	NUT	1	BK	
-97	209-58838-9	LINE ASSEMBLY, No. 2 flight control reservoir drain to 45° elbow fuselage station 192	1	BK	
-98	MS21907D4	ELBOW	1	BK	
	AN6289-4	NUT	1	BK	
	AN6291-4	RING	1	BK	
	AN6290-4	GASKET	2	BK	
	AN939-4D	ELBOW	1	BK	
	AN832-4D	UNION	1	BK	
	AN924-4D	NUT	1	BK	
-99	209-58808-13	LINE ASSEMBLY, No. 2 flight control accumulator air pressure from 90° elbow in accumulator to bulkhead tee on external disconnect panel	1	HU	
	209-58838-77	LINE ASSEMBLY, No. 2 flight control accumulator air pressure from 90° elbow in accumulator to bulkhead tee on external disconnect panel	1	MB	
	MS21908D4	ELBOW	1	BK	
	AN6290-4	GASKET	1	BK	
	AN6291-4	RING	1	BK	
	AN6289-4	NUT	1	BK	
-100	AN5771T7A	GAGE (interchangeable with AN5771T7B)	1	BK	
	ATTACHING PARTS				
	AN515-6R15	SCREW	4	BK	
	NAS43DD1-12	SPACER	1	BK	
	2W18-6M	WASHER, Flat (NA) (89372)	8	BK	
	AN365-1032	NUT	4	BK	
	---*---				
-101	209-58838-61	LINE ASSEMBLY, Emergency suction from cross at station 220 to elbow at station 181	1	HA	
	209-58868-7	LINE ASSEMBLY, Emergency suction from cross at station 220 to elbow at station 181	1	FR	
-102	MS21904D12	ELBOW	2	BK	
-103	209-58838-37	LINE ASSEMBLY, Emergency suction from elbow at station 181 to elbow at station 182	1	HA	
	209-58838-81	LINE ASSEMBLY, Emergency suction from elbow at station 181 to elbow at station 182	1	FR	
-104	MS21902D6	UNION	1	BK	
-105	209-58824-49	LINE ASSEMBLY, No. 2 flight control system pressure from elbow in filter fuselage station 221 to elbow station 215	1	HA	
	209-58834-3	LINE ASSEMBLY, No. 2 flight control system pressure from elbow in filter fuselage station 221 to elbow station 215	1	FR	
-106	209-58824-51	LINE ASSEMBLY, No. 2 flight control system return from elbow fuselage station 224 to elbow station 215	1	HA	
	209-58834-5	LINE ASSEMBLY, No. 2 flight control system return from elbow fuselage station 224 to elbow station 215	1	FR	
-107	181-58370	CAP ASSEMBLY, Hydraulic flared tube fitting	1	BK	
	AN924-6D	NUT	1	BK	
	AN832-6D	UNION	1	BK	
	AN6290-6	GASKET	2	BK	
	AN939D6	ELBOW	1	BK	
	MS21902D6	UNION	1	BK	
-108	209-58824-45	LINE ASSEMBLY, No. 2 flight control system reservoir fill from elbow fuselage station 224.5 to union station 218	1	MA	

NO. 2 AND EMERGENCY FLIGHT CONTROL SYSTEM EQUIPMENT - APPLICABLE TO AIRCRAFT CODED (BK)

FIGURE & INDEX NO.	PART NUMBER	1 2 3 4 5 6 7 NOMENCLATURE	UNITS PER ASSY.	USABLE ON CODE	S/C NO.
127	209-58824-85	LINE ASSEMBLY, No. 2 flight control system reservoir fill from elbow fuselage station 224.5 to union station 218	1	MB	
-109	AN6287-1	VALVE	1	BK	
	194-58315	ADAPTER, Hydraulic accumulator air valve	1	BK	
	AN924-10D	NUT	1	BK	
	2W18-1416	WASHER, Flat (NA) (89372)	1	BK	
	AN6290-4	GASKET	1	BK	
	AN6291-4	RING	1	BK	
	AN6289-4	NUT	1	BK	
	MS21909-4D	TEE	1	BK	
-110	209-58824-47	LINE ASSEMBLY, No. 2 flight control system accumulator air pressure from elbow fuselage station 225 to elbow station 227	1	BK	
-111	209-58824-83	LINE ASSEMBLY, No. 2 flight control system suction from cross at station 220.75 to quick disconnect at station 220.75	1	MA	
	209-58824-89	LINE ASSEMBLY, No. 2 flight control system suction from cross at station 220.75 to quick disconnect at station 220.75	1	HV	
	209-58824-95	LINE ASSEMBLY, No. 2 flight control system suction from cross at station 220.75 to quick disconnect at station 220.75	1	FR	
-112	3055-S11-12D	COUPLING HALF AND DUST CAP ASSEMBLY (AQ) (00624)	1	BK	
	ATTACHING PARTS				
	AN520-10R10	SCREW	3	BK	
	2W18-10M	WASHER, Flat (NA) (89372)	6	BK	
	AN365-1032	NUT	3	BK	
	---*---				
-113	209-58824-63	LINE ASSEMBLY, No. 2 flight control system pressure from elbow fuselage station 225 to elbow station 220.45	1	MA	
	209-58824-91	LINE ASSEMBLY, No. 2 flight control system pressure from elbow fuselage station 225 to elbow station 220.45	1	MB	
-114	3055-S11-6D	COUPLING HALF AND DUST CAP ASSEMBLY (AQ) (00624)	1	BK	
	ATTACHING PARTS				
	AN520-10R10	SCREW	3	BK	
	2W18-10M	WASHER, Flat (NA) (89372)	6	BK	
	AN365-1032	NUT	3	BK	
	---*---				
	MS21902D6	UNION	1	BK	
	AN6290-6	GASKET	2	BK	
	AN941-6D	ELBOW	1	MA	
	AN939D6	ELBOW	1	MB	
	AN6289-6	NUT	1	BK	
	AN6291-6	RING	1	BK	
-115	209-58209	BRACKET ASSEMBLY, Hydraulic external disconnect RH	1	MA	
	209-58209-21	BRACKET ASSEMBLY, Hydraulic external disconnect RH	1	MB	

NO. 1 AND NO. 2 FLIGHT CONTROL AILERON ACTUATOR ASSEMBLY

FIGURE & INDEX NO.	PART NUMBER	1 2 3 4 5 6 7	NOMENCLATURE	UNITS PER ASSY.	USABLE ON CODE	S/C NO.
128	209-58705-21		ACTUATOR ASSEMBLY, Hydraulic aileron flight control LH	1		
	209-58705-22		ACTUATOR ASSEMBLY, Hydraulic aileron flight control RH	1		
-1	209-58717-5	.	ROD END ASSEMBLY, Hydraulic aileron flight control cylinder	1		
-2	HSBG-14SA	. .	BEARING (HLF) (97613)	1		
-3	MS15001-3	. .	FITTING, Lubrication	1		
-4	2W15-16	.	WASHER, Lock (NA) (89372)	1		
-5	1N7-16A	.	NUT, Check (NA) (89372)	1		
-6	209-58715	.	RETAINER, Hydraulic aileron flight control cylinder	1		
-7	209-58712	.	HEAD, Hydraulic aileron flight control cylinder	1		
-8	MS28782-21	.	RING	2		
-9	AN6227-21	.	PACKING	1		
-10	AN6244-8	.	RING	2		
-11	AN6230-8	.	GASKET	1		
-12	2W12-21	.	WASHER, Felt (NA) (89372) (interchangeable with AN6232C3-15/16)	1		
-13	209-58756	.	ROD, Hydraulic flight control stabilizer actuator piston (supersedes 209-58710 for future procurement)	1		
	209-58756-3	. .	ROD, Hydraulic flight control stabilizer actuator piston	1		
-14	MS28782-33	.	RING	2		
-15	AN6227-33	.	PACKING	1		
-16	209-58738	.	SLEEVE, Hydraulic aileron flight control cylinder	1		
-17	209-58735	.	DIVIDER, Hydraulic aileron flight control cylinder	1		
-18	AN6244-8	.	RING	4		
-19	AN6230-8	.	GASKET	2		
-20	MS28782-21	.	RING	4		
-21	AN6227-21	.	PACKING	2		
-22	209-58754-3	.	PISTON, Hydraulic aileron flight control cylinder outboard (supersedes 209-58707 for future procurement)	1		
-23	MS28782-21	.	RING	2		
-24	AN6227-21	.	PACKING	1		
-25	MS28782-33	.	RING	2		
-26	AN6227-33	.	PACKING	1		
-27	AN6244-10	.	RING	4		
-28	AN6230-10	.	GASKET	2		
-29	209-58727-3	.	FITTING, Hydraulic aileron flight control cylinder end LH	1		
	209-58727-4	.	FITTING, Hydraulic aileron flight control cylinder end RH	1		
-30	209-58728	.	BOLT, Hydraulic aileron flight control cylinder end fitting	1		
-31	2W1-21-26-064	.	WASHER, Plain (NA) (89372)	1		
-32	AN364-524	.	NUT	1		
-33	209-58714	.	CYLINDER END ASSEMBLY, Hydraulic aileron flight control	1		
-34	209-58747	. .	BUSHING, Hydraulic aileron flight control cylinder end	1		
-35	209-58718	.	NUT, Hydraulic aileron flight control cylinder aft	1		
-36	209-58716	.	WASHER, Hydraulic flight control aft lock	1		
-37	AN365-524	.	NUT	1		
-38	209-58744	.	WASHER, Hydraulic aileron flight control cylinder	1		
-39	MS28782-21	.	RING	1		
-40	AN6227-21	.	PACKING	1		
-41	209-58704-11	.	CYLINDER ASSEMBLY, Hydraulic aileron flight control outboard LH	1		
	209-58704-3	. .	CYLINDER SUBASSEMBLY; Hydraulic aileron flight control outboard LH	1		
	209-58704-12	.	CYLINDER ASSEMBLY, Hydraulic aileron flight control outboard RH	1		
	209-58704-4	. .	CYLINDER SUBASSEMBLY, Hydraulic aileron flight control outboard RH	1		
-42	RD205SB-5.5L	. .	INSERT (ROSN) (83324)	3		
-43	RL24SB-7	. .	RING (ROSN) (83324)	3		
-44	209-587166	. .	BUSHING, Hydraulic flight control valve lever support (supersedes 4B20-S6-008 (NA) (89372) for future procurement)	2		
-45	5P29	.	PLATE, Hydraulic name (NA) (89372)	1		
	AN535-00-2	.	SCREW	2		
-46	209-58748	.	RETAINER, Hydraulic aileron flight control valve	1		
-47	209-58749	.	WASHER, Hydraulic aileron flight control tab	1		
-48	209-58732	.	ADAPTER, Hydraulic aileron flight control valve	1		
-49	AN6227-16	.	PACKING	1		
-50	MS28782-16	.	RING	1		
	209-58737-8	.	SLEEVE ASSEMBLY, Hydraulic flight control valve notched	1		
-51	209-58737-75	*1 . .	SLEEVE, Hydraulic flight control valve notched sleeve assembly	1		
-52	163-587111	*1 . .	FILTER, Hydraulic flight control valve	3		
-53	209-58737-105	*1 . .	SPOOL, Hydraulic flight control valve notched sleeve assembly	1		
-54	AN6227-14	.	PACKING	4		
-55	MS28782-14	.	RING	4		
-56	209-58733	.	CAP, Hydraulic aileron flight control valve	1		
-57	AN6227-16	.	PACKING	1		
-58	MS28782-16	.	RING	1		
	209-58737-7	.	SLEEVE ASSEMBLY, Hydraulic flight control valve notched	1		
-59	209-58737-75	*2 . .	SLEEVE, Hydraulic flight control valve notched sleeve assembly	1		
-60	163-587111	*2 . .	FILTER, Hydraulic flight control valve	3		
-61	209-58737-105	*2 . .	SPOOL, Hydraulic flight control valve notched sleeve assembly	1		
-62	AN6227-14	.	PACKING	4		
-63	MS28782-14	.	RING	4		
-64	209-58741-1	.	CLIP, Hydraulic aileron flight control elbow LH	1		
	209-58741-2	.	CLIP, Hydraulic aileron flight control elbow RH	1		
-65	AN502-10-6	.	SCREW	1		
-66	2W18-10	.	WASHER, Flat (NA) (89372)	1		
-67	MS21908-4	.	ELBOW (No. 2 system pressure)	1		

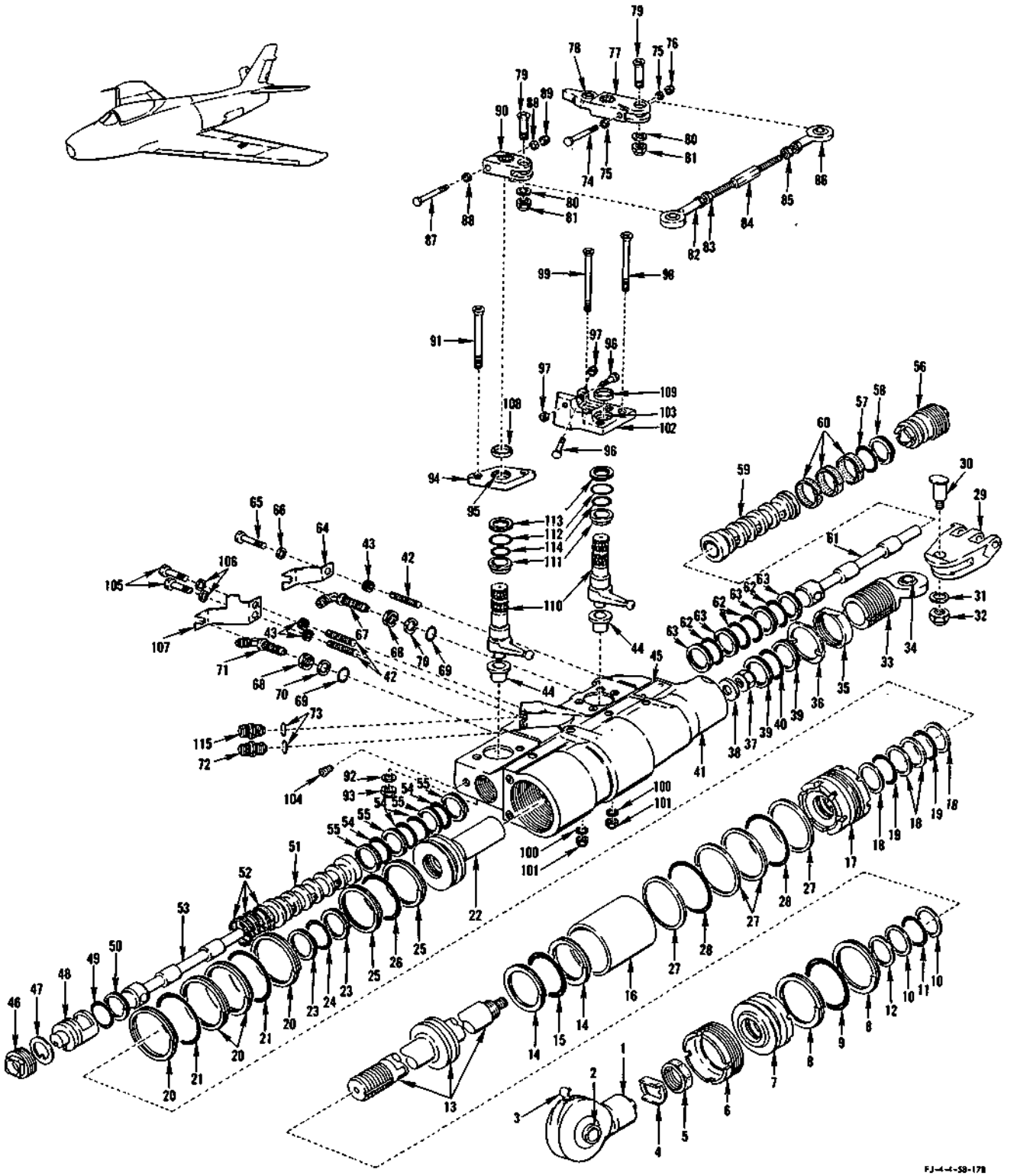

FIGURE 128 - NO. 1 AND NO. 2 FLIGHT CONTROL AILERON ACTUATOR ASSEMBLY

NO. 1 AND NO. 2 FLIGHT CONTROL AILERON ACTUATOR ASSEMBLY

FIGURE & INDEX NO.	PART NUMBER	1	2	3	4	5	6	7	NOMENCLATURE	UNITS PER ASSY.	USABLE ON CODE	S/C NO.
128-68	AN6289-4	.							NUT	1		
-69	AN6290-4	.							GASKET	1		
-70	AN6291-4	.							RING	1		
-71	AN937-4	.							ELBOW (No. 1 system pressure)	1		
-72	AN815-4	.							UNION (No. 1 system return)	1		
-73	AN6290-4	.							GASKET	2		
-74	AN174-13A	.							BOLT	1		
-75	2W18-416	.							WASHER, Flat (NA) (89372)	2		
-76	AN365-428	.							NUT	1		
-77	209-58721-1	.							LEVER, Hydraulic aileron flight control valve aft LH	1		
	209-58721-2	.							LEVER, Hydraulic aileron flight control valve aft RH	1		
-78	DSRP-4	.	.						BEARING (FAF) (21335)	1		
-79	209-58709	.							BOLT, Hydraulic aileron flight control valve	2		
-80	2W18-416M	.							WASHER, Flat (NA) (89372)	2		
-81	AN364-428	.							NUT	2		
	209-58722	.							LINK ASSEMBLY, Hydraulic aileron flight control valve	1		
-82	209-58743	.	.						ROD END, Hydraulic aileron flight control valve	1		
-83	1N7-5LA	.	.						NUT, Check (NA) (89372)	1		
-84	209-58723-3	.	.						BARREL, Hydraulic aileron flight control link	1		
-85	1N7-5A	.	.						NUT, Check (NA) (89372)	1		
-86	FR4-5	.	.						ROD END (SHA) (77896)	1		
-87	AN174-13A	.							BOLT	1		
-88	2W18-416	.							WASHER, Flat (NA) (89372)	2		
-89	AN365-428	.							NUT	1		
-90	209-58720	.							LEVER, Hydraulic aileron flight control valve forward	1		
-91	NAS334PA24	.							BOLT	2		
-92	2W18-416	.							WASHER, Flat (NA) (89372)	2		
-93	AN365-428	.							NUT	2		
-94	209-58724	.							CAGE ASSEMBLY, Hydraulic aileron flight control valve	1		
-95	AN201KP8A	.	.						BEARING	1		
-96	NAS428KH4-10	.							BOLT	2		
-97	1N7-4A	.							NUT, Check (NA) (89372)	2		
-98	NAS334PA24	.							BOLT	3		
-99	NAS334PA27	.							BOLT	1		
-100	2W18-416	.							WASHER, Flat (NA) (89372)	4		
-101	AN365-428	.							NUT	4		
-102	209-58753-11	.							CAGE ASSEMBLY, Hydraulic aileron flight control elbow LH (supersedes 209-58734-1 for future procurement)	1		
	209-58753-12	.							CAGE ASSEMBLY, Hydraulic aileron flight control elbow RH (supersedes 209-58734-2 for future procurement)	1		
-103	AN201KP8A	.	.						BEARING	1		
-104	1P8	.							PLUG, Tinned pipe (NA) (89372) (supersedes 192-58711 for future procurement)	15		
-105	AN502-10-6	.							SCREW	2		
-106	2W18-10	.							WASHER, Flat (NA) (89372)	2		
-107	209-58711-1	.							BRACKET, Hydraulic aileron flight control elbow LH	1		
	209-58711-2	.							BRACKET, Hydraulic aileron flight control elbow RH	1		
-108	4B21M-S8-005	.							BUSHING, Spacer (NA) (89372)	1		
-109	4B21M-S8-004	.							BUSHING, Spacer (NA) (89372)	1		
-110	209-58726-3	.							SHAFT, Hydraulic flight control aileron valve	2		
-111	209-58725	.							SEAL, Hydraulic aileron flight control valve shaft	2		
-112	AN6227-18	.							PACKING	2		
-113	MS28782-18	.							RING	2		
-114	AN6227-12	.							PACKING	2		
-115	MS21902-4	.							UNION (No. 2 system return)	1		

NOTE: *1 Matched set to be stocked as an assembly
*2 Matched set to be stocked as an assembly

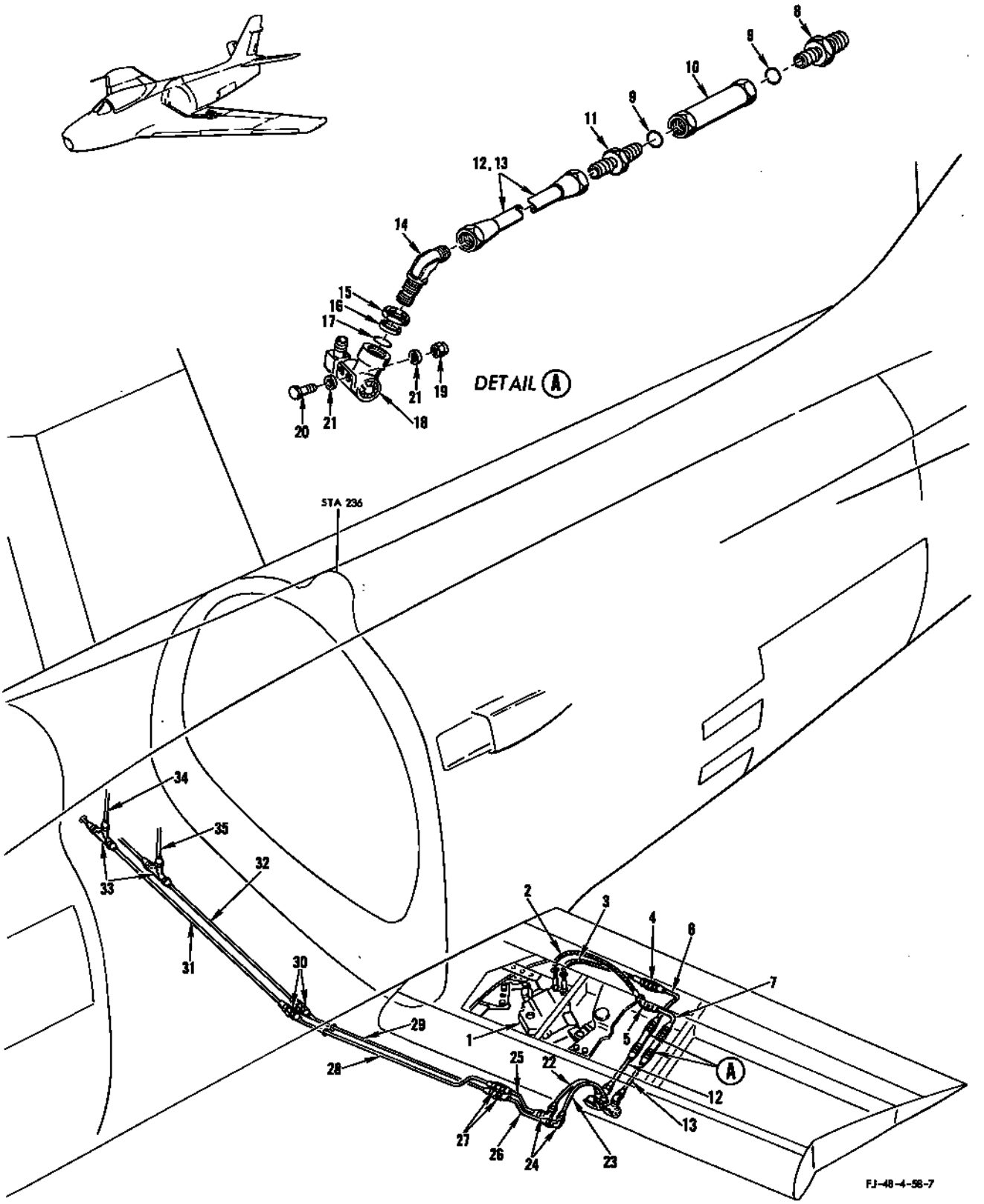

FIGURE 129 - WING FLAP SPOILER SYSTEM - APPLICABLE TO AIRCRAFT CODED (FR)

NO. 1 AND NO. 2 FLIGHT CONTROL STABILIZER ACTUATOR ASSEMBLY

FIGURE & INDEX NO.	PART NUMBER	1 2 3 4 5 6 7 NOMENCLATURE	UNITS PER ASSY.	USABLE ON CODE	S/C NO.
131	209-58706	ACTUATOR ASSEMBLY, Hydraulic flight control stabilizer	1		
-1	AN4H4A	. BOLT	1		
-2	2W18-416L	. WASHER, Flat (NA) (89372)	1		
-3	209-58785	. KEY, Hydraulic flight control stabilizer actuator index	1		
-4	209-587167	. NUT, Hydraulic flight control stabilizer cylinder (supersedes 1N6-42A (NA) (89372) for future procurement)	1		
	209-58776-5	. CYLINDER ASSEMBLY, Hydraulic flight control stabilizer actuator	1		
-5	209-58776-3	. . CYLINDER, Hydraulic flight control stabilizer actuator cylinder assembly	1		
-6	209-58781	. . BUSHING, Hydraulic flight control cylinder stop	1		
-7	HSBG-12SA	. . BEARING (HLF) (97613)	1		
-8	MS15001-1	. . FITTING, Lubrication	1		
-9	209-58792	. SCREW, Hydraulic flight control cylinder head retainer	2		
-10	209-58784	. HEAD, Hydraulic flight control stabilizer actuator cylinder	1		
-11	5R14-3	. RING, Spiral backup (NA) (89372)	2		
-12	AN6230-3	. GASKET	1		
-13	2W12-22	. WASHER, Felt (NA) (89372)	2		
-14	5R16-22	. RING, Spiral backup (NA) (89372)	10		
-15	AN6227-22	. PACKING	5		
-16	AN363-524	. NUT	1		
-17	209-58790	. WASHER, Hydraulic flight control stabilizer cylinder	1		
-18	209-58755	. PISTON, Hydraulic flight control stabilizer actuator (supersedes 209-58777 for future procurement)	1		
	209-58755-3	. . PISTON, Hydraulic flight control stabilizer actuator	1		
-19	5R16-30	. RING, Spiral backup (NA) (89372)	4		
-20	AN6227-30	. PACKING	2		
-21	209-58783	. RETAINER, Hydraulic flight control stabilizer actuator head	1		
-22	209-58757-3	. ROD, Hydraulic flight control stabilizer actuator piston (supersedes 209-58778 for future procurement)	1		
-23	2W12-22	. WASHER, Felt (NA) (89372) (interchangeable with AN6232C4-3/16)	1		
-24	5R14-8	. RING, Spiral backup (NA) (89372)	2		
-25	AN6230-8	. GASKET	1		
-26	1N7-15A	. NUT, Check (NA) (89372)	1		
-27	2W15-15	. WASHER, Lock (NA) (89372)	1		
	209-58788-5	. ROD END ASSEMBLY, Hydraulic flight control	1		
-28	209-58788-3	. . ROD END, Hydraulic flight control rod end assembly	1		
-29	HSBG-12SA	. . BEARING (HLF) (97613)	1		
-30	MS15001-1	. . FITTING, Lubrication	1		
-31	NAS50-168	. RING	1		
-32	7R4-22D	. RETAINER, Wiper ring (NA) (89372)	1		
-33	AN6231A12	. SCRAPER	1		
-34	2W1AL77-53-40	. WASHER, Plain (NA) (89372)	1		
-35	209-58782	. HEAD, Hydraulic flight control stabilizer actuator	1		
-36	5R14-3	. RING, Spiral backup (NA) (89372)	2		
-37	AN6230-3	. GASKET	1		
	209-58708-3	. BODY ASSEMBLY, Hydraulic flight control stabilizer actuator assembly	1		
	209-58775-5	. . BODY ASSEMBLY, Hydraulic flight control stabilizer actuator	1		
-38	209-58775-3	. . . BODY, Hydraulic flight control stabilizer actuator body assembly	1		
-39	209-587166	. . . BUSHING, Hydraulic flight control valve lever support (supersedes 4B2086-008 (NA) (89372) for future procurement)	2		
-40	1P8	. . PLUG, Tinned pipe (NA) (89372) (supersedes 192-58711 for future procurement)	15		
-41	AN315-3R	. NUT	4		
-42	AN501A10-20	. SCREW	4		
-43	1N7-4A	. NUT, Check (NA) (89372)	2		
-44	NAS428H4-7	. BOLT	2		
-45	2W18-616	. WASHER, Flat (NA) (89372)	2		
-46	AN364-624	. NUT	2		
	209-58779-5	. LEVER ASSEMBLY, Hydraulic flight control stabilizer actuator	1		
-47	209-58779-3	. . LEVER, Hydraulic flight control stabilizer actuator lever assembly	1		
-48	AN200KS4	. . BEARING	1		
-49	4B19S8-014	. . BUSHING, Press fit plain (NA) (89372)	1		
	1191-4CNx-3/8	. . INSERT, Heli-coil (AF) (91767)	1		
	209-58779-6	. LEVER ASSEMBLY, Hydraulic flight control stabilizer actuator	1		
-50	209-58779-4	. . LEVER, Hydraulic flight control stabilizer actuator lever assembly	1		
-51	AN200KS4	. . BEARING	1		
-52	AN364-428	. NUT	2		
-53	2W18-416M	. WASHER, Flat (NA) (89372)	4		
-54	NAS464-4A12	. BOLT	2		
-55	209-58786	. ROD, Hydraulic flight control stabilizer actuating valve connecting	1		
-56	NAS144DH11	. BOLT	2		
-57	209-58787	. COLLAR, Hydraulic flight control lever	2		
-58	192-58799	. SPACER, Hydraulic flight control valve lever	2		
-59	192-58725	. RETAINER, Hydraulic flight control valve lever	2		
	192-58737	. BUSHING ASSEMBLY, Hydraulic flight control valve	2		
-60	AN201KP8A	. . BEARING	1		
-61	192-58737-3	. . BUSHING, Hydraulic flight control valve bushing assembly	1		
-62	192-58735	. SEAL, Hydraulic flight control valve	2		
-63	AN6227-12	. PACKING	2		
-64	AN6227-17	. PACKING	2		
-65	192-58745-3	. LEVER, Hydraulic flight control valve internal	2		
-66	209-58780	. CONNECTOR, Hydraulic flight control cylinder	1		
-67	AN6290-6	. GASKET	1		
-68	5R16-5	. RING, Spiral backup (NA) (89372)	2		

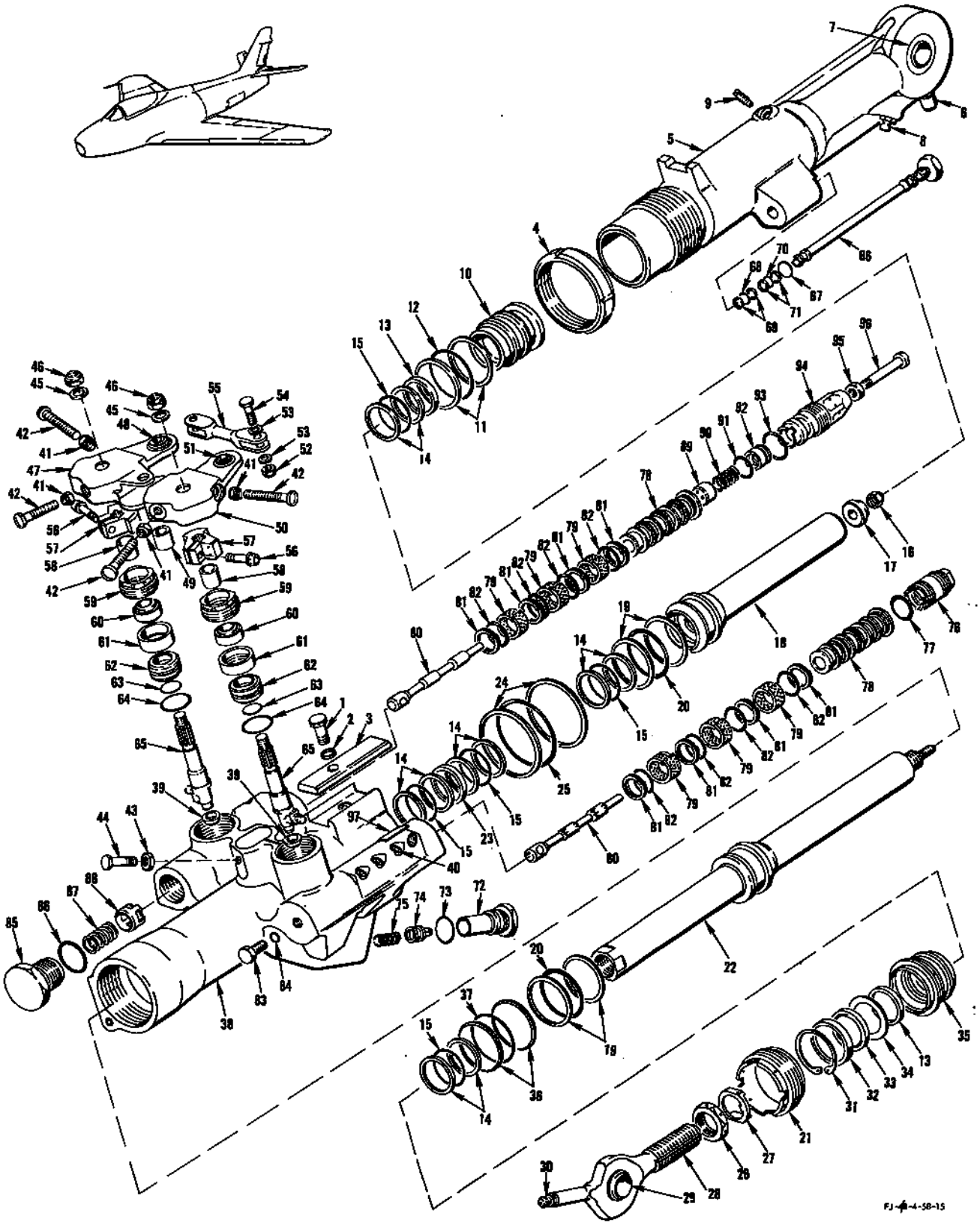

FIGURE 131 - NO. 1 AND NO. 2 FLIGHT CONTROL STABILIZER ACTUATOR ASSEMBLY

NO. 1 AND NO. 2 FLIGHT CONTROL STABILIZER ACTUATOR ASSEMBLY

FIGURE & INDEX NO.	PART NUMBER	1	2	3	4	5	6	7	NOMENCLATURE	UNITS PER ASSY.	USABLE ON CODE	S/C NO.
131-69	AN6227-5		.						PACKING	1		
-70	5R16-6		.						RING, Spiral backup (NA) (89372)	2		
-71	AN6227-6		.						PACKING	1		
-72	172-58732-3		.						CAGE, Hydraulic check valve	2		
-73	AN6290-10		.						GASKET	2		
-74	165-58733		.						POPPET, Hydraulic valve integral check valve	2		
-75	165-58775		.						SPRING, Compression	2		
-76	187-587101		.						ADAPTER, Hydraulic stabilizer flight control actuator	1		
-77	AN6227-15		.						PACKING	1		
	209-58737-11		.						SLEEVE ASSEMBLY, Hydraulic flight control valve notched	2		
-78	209-58737-75	*1	.		.				SLEEVE, Hydraulic flight control valve notched sleeve assembly	1		
-79	163-587111	*1	.		.				FILTER, Hydraulic flight control valve	3		
-80	209-58737-109	*1	.		.				SPOOL, Hydraulic flight control valve notched sleeve assembly	1		
-81	5R16-14		.						RING, Spiral backup (NA) (89372)	8		
-82	AN6227-14		.						PACKING	8		
-83	AN814-2D		...						PLUG AND BLEEDER	1		
-84	AN6290-2		.						GASKET	1		
-85	209-58794		.						CAP, Hydraulic flight control stabilizer actuator bias spring	1		
-86	AN6290-12		.						GASKET	1		
-87	187-587129		.						SPRING, Compression close tolerance	1		
-88	187-587117		.						RETAINER, Hydraulic flight control stabilizer actuator bias spring	1		
-89	187-587127		.						GUIDE, Hydraulic stabilizer control actuator spring case	1		
-90	187-587130		.						SPRING, Compression close tolerance	1		
-91	AN6227-10		.						PACKING	1		
-92	187-587126		.						PLUG, Hydraulic stabilizer control actuator spring case	1		
-93	AN6227-15		.						PACKING	1		
-94	187-587128		.						HOUSING, Hydraulic stabilizer control actuator bias spring	1		
-95	AN316-4R		.						NUT	1		
-96	AN502-416-18		.						SCREW	1		
-97	5P29		.						PLATE, Hydraulic name (NA) (89372)	1		
	AN535-00-2		.						SCREW	2		

NOTE: *1 Matched set to be stocked as an assembly

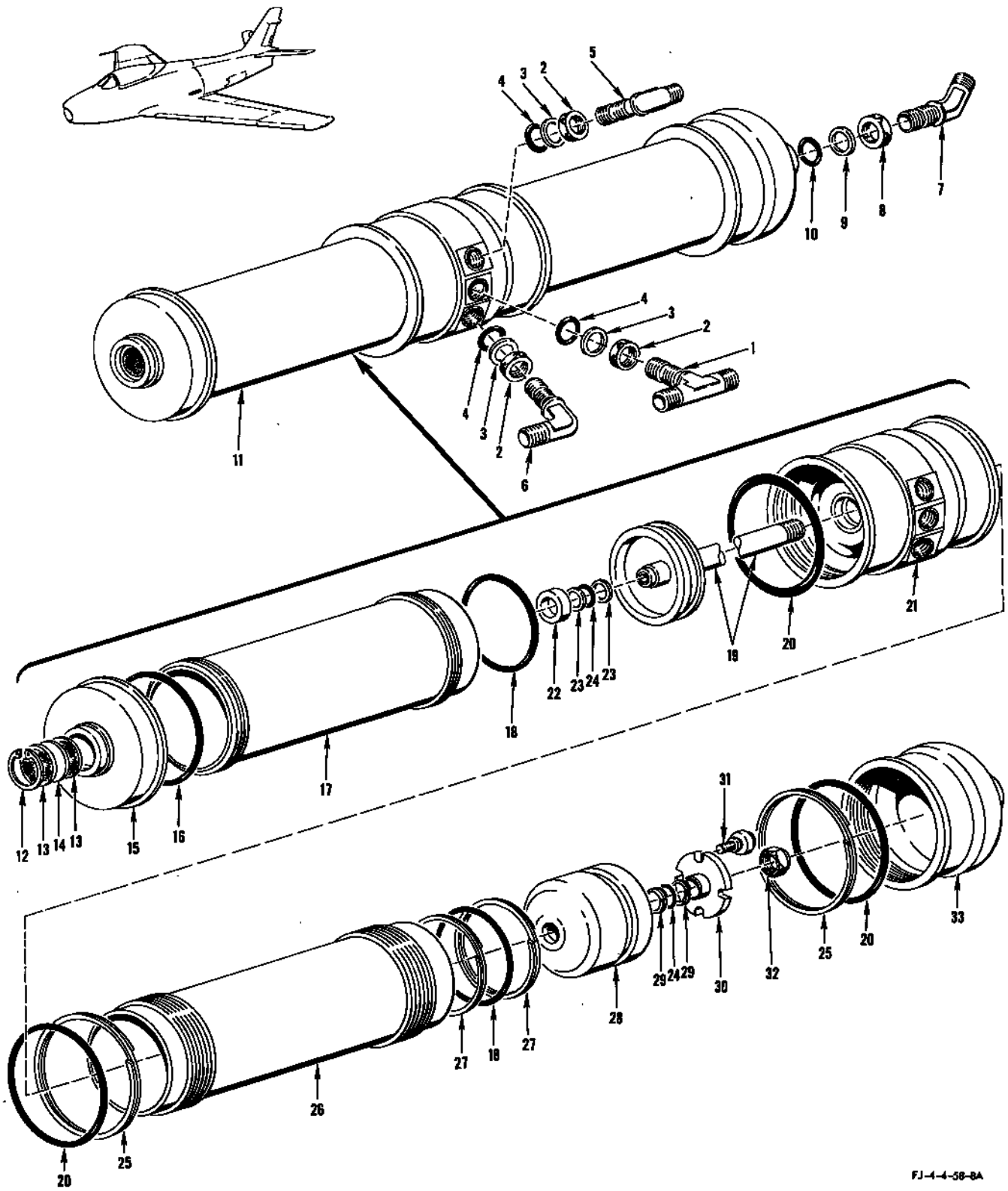

FIGURE 132 - NO. 1 AND NO. 2 FLIGHT CONTROL ACCUMULATOR ASSEMBLY

NO. 1 AND NO. 2 FLIGHT CONTROL MANIFOLD SUPPORT ASSEMBLY - APPLICABLE TO AIRCRAFT CODED (ET)

FIGURE & INDEX NO.	PART NUMBER	1 2 3 4 5 6 7 NOMENCLATURE	UNITS PER ASSY.	USABLE ON CODE
133	209-58739-21	SUPPORT ASSEMBLY, Hydraulic aileron flight control manifold LH	1	EX
	209-58739-31	SUPPORT ASSEMBLY, Hydraulic aileron flight control manifold RH	1	LR
	209-58739-22	SUPPORT ASSEMBLY, Hydraulic aileron flight control manifold LH	1	EX
	209-58739-32	SUPPORT ASSEMBLY, Hydraulic aileron flight control manifold RH	1	LR
-1	MS21902D4	. UNION	6	ET
-2	AN6290-4	. GASKET	12	ET
-3	AN6280-4	. CHECK VALVE	2	ET
-4	AN6291-4	. RING	4	EX
-5	AN6291-4	. RING	3	LR
-6	AN6289-4	. NUT	4	EX
-7	AN6289-4	. NUT	3	LR
-8	MS21907-4	. ELBOW	2	ET
-9	AN837-4	. ELBOW	2	EX
-10	AN837-4	. ELBOW	1	LR
-11	AN815-4	. UNION	1	LR
-12	209-58730-5	. MANIFOLD, Hydraulic aileron flight control LH (supersedes 209-58740-5 for future procurement)	1	ET
	209-58730-6	. MANIFOLD, Hydraulic aileron flight control RH (supersedes 209-58740-6 for future procurement)	1	ET
-13	209-58750-11	. BRACKET ASSEMBLY, Hydraulic aileron flight control manifold LH	1	ET
	209-58750-12	. BRACKET ASSEMBLY, Hydraulic aileron flight control manifold RH	1	ET
-14	2W18-416L	. WASHER, Flat (NA)	3	ET
-15	AN502-416-8	. SCREW	3	ET

UTILITY SYSTEM LINES AND EQUIPMENT - APPLICABLE TO AIRCRAFT CODED (FR)

FIGURE & INDEX NO.	PART NUMBER	1 2 3 4 5 6 7 NOMENCLATURE	UNITS PER ASSY.	USABLE ON CODE	S/C NO.
134-1	209-58358	LINE ASSEMBLY, Hydraulic utility suction fuselage station 180.906 to station 186.781 RH side	1	FR	
-2	209-58838-95	LINE ASSEMBLY, Utility suction from union station 186 to union ground test panel	1	FR	
-3	209-58838-9	LINE ASSEMBLY, Utility return from elbow wl-14 to cross wl-16	1	FR	
-4	209-58838-65	LINE ASSEMBLY, Utility pressure from tee wl-14 station 180 to tee wl-12 station 180	1	FR	
-5	209-58838-67	LINE ASSEMBLY, Utility pressure from tee wl-12 station 180 to reducer on restrictor station 180	1	FR	
-6	209-58838-71	LINE ASSEMBLY, Utility pressure from elbow on check valve station 180 to elbow on wingfold selector valve	1	FR	
-7	209-58808-85	LINE ASSEMBLY, Utility return from elbow in wingfold valve to elbow in check valve	1	FR	
-8	209-58602	HYDRAULIC EQUIPMENT ASSEMBLY, Valve wingfold selector (see figures 164 and 165 for breakdown)	1	FR	
-9	209-58865-3	LINE ASSEMBLY, Utility system return from elbow station 180 to tee station 214	1	FR	
-10	209-58865-9	LINE ASSEMBLY, Utility system return from tee station 214 to elbow station 220.75	1	FR	
-11	209-58865-11	LINE ASSEMBLY, Utility system return from tee station 214 to tee at rear spar (see figure 129 for continuation)	1	FR	
-12	209-58865-5	LINE ASSEMBLY, Utility system pressure from elbow station 180 to tee station 201.5	1	FR	
-13	209-58865-7	LINE ASSEMBLY, Utility system pressure from tee station 201.5 to tee station 220	1	FR	
-14	209-58865-13	LINE ASSEMBLY, Utility system pressure from tee station 201.5 to tee at rear spar (see figure 129 for continuation)	1	FR	
-15	209-58838-85	LINE ASSEMBLY, Utility return from union station 223 to union at field break disconnect	1	FR	
-16	209-58838-87	LINE ASSEMBLY, Utility pressure from tee station 220 to union at field break disconnect	1	FR	
-17	209-58838-11	LINE ASSEMBLY, Utility reservoir drain from elbow station 191 to elbow station 185.5	1	FR	
-18	209-58808-81	LINE ASSEMBLY, Utility reservoir vent from elbow station 180 to union in landing gear deck	1	FR	
-19	209-58808-79	LINE ASSEMBLY, Scupper drain tee wl-3 to union in landing gear deck	1	FR	
-20	209-58841-43	LINE ASSEMBLY, Utility pressure from tee station 182 RH side to check valve and landing gear selector valve station 181 LH side	1	FR	
-21	209-58601	HYDRAULIC EQUIPMENT ASSEMBLY, Valve landing gear selector (see figure 141 for breakdown)	1	FR	
-22	209-58612	HYDRAULIC EQUIPMENT ASSEMBLY, Valve landing gear manual by-pass (see figure 141 for breakdown)	1	FR	
-23	209-58811-59	LINE ASSEMBLY, Utility return from elbow in landing gear selector valve to elbow station 181	1	FR	
-24	209-58811-61	LINE ASSEMBLY, Utility return from union in check valve to tee in landing gear dump valve	1	FR	
-25	209-58811-63	LINE ASSEMBLY, Utility return from tee in landing gear dump valve to cross station 182 RH	1	FR	
-26	209-58824-35	LINE ASSEMBLY, Scupper overboard drain from elbow station 196 to overboard drain station 197	1	FR	
-27	209-58824-37	LINE ASSEMBLY, Utility reservoir drain from elbow station 196 to overboard drain station 197	1	FR	
-28	209-58824-87	LINE ASSEMBLY, Utility system pressure from elbow in test panel station 223 to tee station 219	1	FR	
-29	AN6292-8-37-1/2	HOSE ASSEMBLY (pressure)	1	FR	
-30	MS28741-8-0290	HOSE ASSEMBLY (return)	1	FR	
-31	209-58822-47	LINE ASSEMBLY, Utility system pressure from fitting station 236.5 LH to elbow station 246.032	1	FR	
-32	209-58822-33	LINE ASSEMBLY, Utility system return from fitting station 236.5 LH to union station 246.037	1	FR	
-33	209-58822-49	LINE ASSEMBLY, Utility system pressure from elbow station 246.032 to 90° elbow station 286.5	1	FR	
-34	209-58822-35	LINE ASSEMBLY, Utility system return from union station 246.037 to fitting station 286.5	1	FR	
-35	209-58822-53	LINE ASSEMBLY, Utility system pressure from check valve in fitting assembly station 286.5 to tee in valve assembly station 301	1	FR	
-36	209-58617	HYDRAULIC EQUIPMENT ASSEMBLY, Aft speed brake retract valve	1	FR	
	ATTACHING PARTS				
	AN3-22A	BOLT	2	FR	
	2W18-10M	WASHER, Flat (NA) (89372)	2	FR	
	---*---				
-37	25036	. VALVE, Hydraulic (AP) (00502)	1	FR	
-38	AN6290-6	. GASKET	5	FR	
-39	AN6291-6	. RING	3	FR	
-40	AN6289-6	. NUT	3	FR	
-41	MS21909-6	. TEE	1	FR	
-42	MS21907-6	. ELBOW	1	FR	
-43	MS21912-6	. TEE	1	FR	
-44	AN6280-6	. VALVE	1	FR	
-45	MS21902-6	. UNION	1	FR	
-46	209-58822-55	LINE ASSEMBLY, Utility system pressure from tee in valve assembly station 301 to union in servo valve	1	FR	
-47	209-58822-57	LINE ASSEMBLY, Utility system pressure from 45° elbow in valve assembly station 301 to elbow	1	FR	

UTILITY SYSTEM LINES AND EQUIPMENT - APPLICABLE TO AIRCRAFT CODED (FR)

FIGURE & INDEX NO.	PART NUMBER	1 2 3 4 5 6 7 NOMENCLATURE	UNITS PER ASSY.	USABLE ON CODE	S/C NO.
134-48	209-58822-51	LINE ASSEMBLY, Utility system pressure from elbow station 286.5 to tee in shear web	1	FR	
-49	209-58810-11	LINE ASSEMBLY, Utility system pressure from reducer tee in shear web to arresting hook snubber valve	1	FR	
-50	209-58810-9	LINE ASSEMBLY, Utility system pressure from tee in shear web to reducer in speed brake selector valve	1	FR	
-51	209-58610	HYDRAULIC EQUIPMENT ASSEMBLY, Valve speed brake lock (see figure 154 for breakdown)	1	FR	
-52	209-58810-85	LINE ASSEMBLY, Utility system return from union station 298 LH side to speed-brake selector valve	1	FR	
-53	209-58606	HYDRAULIC EQUIPMENT ASSEMBLY, Valve speed brake selector (see figure 154 for breakdown)	1	FR	
-54	209-58810-19	LINE ASSEMBLY, Utility system return from tee in shear web to union station 298 LH side	1	FR	
-55	209-58810-83	LINE ASSEMBLY, Utility system return from tee in shear web to lock valve	1	FR	
-56	209-58604	HYDRAULIC EQUIPMENT ASSEMBLY, Valve arresting hook selector (see figure 162 for breakdown)	1	FR	
-57	209-58822-63	LINE ASSEMBLY, Utility system return from arresting hook snubber valve to elbow wl-22 left hand side	1	FR	
-58	209-58822-37	LINE ASSEMBLY, Utility system return from elbow wl-22 left hand side to check valve in tee in shear web	1	FR	
-59	209-587157	VALVE ASSEMBLY, Hydraulic flight control aft speed brake servo (see figure 155 for breakdown)	1	FR	
-60	209-58822-45	LINE ASSEMBLY, Utility system return from tee in valve station 301 to elbow in servo valve	1	FR	
-61	209-58822-29	LINE ASSEMBLY, Utility system return from servo valve to relief valve station 306.37	1	FR	
	209-58618	HYDRAULIC EQUIPMENT ASSEMBLY, Valve aft speed brake relief	1	FR	
-62	A60156	. VALVE, Hydraulic (VNMB) (91130)	1	FR	
-63	MS21902-6	. UNION	1	FR	
-64	AN6290-6	. GASKET	2	FR	
-65	AN6291-6	. RING	1	FR	
-66	AN6289-6	. NUT	1	FR	
-67	MS21912-6	. TEE	1	FR	
-68	209-58822-43	LINE ASSEMBLY, Utility system return from tee in relief valve station 306.37 to tee in valve assembly station 301	1	FR	
-69	209-58822-41	LINE ASSEMBLY, Utility system return from fitting station 286.5 to tee in relief valve station 306.37	1	FR	
-70	209-58822-39	LINE ASSEMBLY, Utility system return from tee station 290 to tee in shear web	1	FR	
-71	209-58807-13	LINE ASSEMBLY, Utility pressure from tee at station 182 to bulkhead elbow station 156	1	FR	
-72	209-58807-19	LINE ASSEMBLY, Utility return from elbow station 182 to utility return line filter	1	FR	
-73	209-58807-53	LINE ASSEMBLY, Utility return from filter to union station 156	1	FR	
	194-58659-11	HYDRAULIC EQUIPMENT ASSEMBLY, Filter utility system 156	1	FR	
-74	MS28720-8	. FILTER (see figure 169 for breakdown)	1	FR	
-75	MS21908D8	. ELBOW	1	FR	
-76	AN6290-8	. GASKET	1	FR	
-77	AN6291-8	. RING	1	FR	
-78	AN6289-8D	. NUT	1	FR	
-79	MS21909D8	. TEE	1	FR	
-80	AN6290-8	. GASKET	1	FR	
-81	AN6291-8	. RING	1	FR	
-82	AN6289-8	. NUT	1	FR	
-83	209-58807-65	LINE ASSEMBLY, Utility return from filter to utility reservoir	1	FR	
-84	194-58651-21	HYDRAULIC EQUIPMENT ASSEMBLY, Reservoir utility system (see figure 140 for breakdown)	1	FR	
	ATTACHING PARTS				
	16146	CLAMP (MAR) (98625)	2	FR	
	---*---				
-85	209-58807-3	LINE ASSEMBLY, Scupper drain from union in scupper to tee station 182	1	FR	
-86	209-58625	HYDRAULIC EQUIPMENT ASSEMBLY, Valve utility reservoir pressurization (see figure 139 for breakdown)	1	FR	
-87	209-58807-23	LINE ASSEMBLY, Air pressure from fitting on engine air duct to bulkhead elbow	1	FR	
	194-58658	HYDRAULIC EQUIPMENT ASSEMBLY, Valve utility	1	FR	
-88	870629	. VALVE, Hydraulic relief (WK) (33525)	1	FR	
	AN6290-4	. GASKET	2	FR	
	AN6291-4	. RING	2	FR	
	AN6289-4	. NUT	2	FR	
	MS21908D4	. ELBOW	2	FR	
-89	209-58807-43	LINE ASSEMBLY, Reservoir air vent from 90° elbow in dump valve to reducer in tee	1	FR	
-90	209-58807-41	LINE ASSEMBLY, Reservoir vent from tee in valve to 90° elbow station 182	1	FR	
-91	209-58807-17	LINE ASSEMBLY, Utility case drain bulkhead union station 190 to elbow in brake return filter	1	FR	
-92	209-58807-47	LINE ASSEMBLY, Reservoir air from tee in valve to 90° elbow in dump valve	1	FR	
-93	209-58807-45	LINE ASSEMBLY, Reservoir air from tee to 90° elbow in top of reservoir	1	FR	
-94	194-58660-11	HYDRAULIC EQUIPMENT ASSEMBLY, Filter brake return (see figure 163 for breakdown)	1	FR	
-95	209-58866-45	LINE ASSEMBLY, Utility system pressure from union station 131 to bulkhead elbow station 156	1	FR	
-96	209-58866-41	LINE ASSEMBLY, Utility system return from union station 131 to bulkhead elbow station 156	1	FR	
-97	209-58836-65	LINE ASSEMBLY, Utility system pressure from union station 116 to union sta 131-	1	FR	

UTILITY SYSTEM LINES AND EQUIPMENT - APPLICABLE TO AIRCRAFT CODED (FR)

FIGURE & INDEX NO.	PART NUMBER	1 2 3 4 5 6 7 NOMENCLATURE	UNITS PER ASSY.	USABLE ON CODE	S/C NO.
134-98	209-58836-63	LINE ASSEMBLY, Utility system return from union station 116 to union station 131	1	FR	
-99	209-58836-33	LINE ASSEMBLY, Utility system pressure from union station 116 to elbow station 64	1	FR	
-100	209-58836-35	LINE ASSEMBLY, Utility system return from union station 65 to union station 116	1	FR	
-101	209-58836-95	LINE ASSEMBLY, Utility system pressure from reducer station 62 to elbow station 151	1	FR	449
	209-58866-75	LINE ASSEMBLY, Utility system pressure from reducer in snubber station 62 to elbow	1	ME	
-102	MS28751-4-0124	HOSE ASSEMBLY (pressure)	1	MD	449
	MS28751-4-0170	HOSE ASSEMBLY (pressure)	1	ME	
-103	MS21902D4	UNION	1	FR	
	AN6290-4	GASKET	1	FR	
-104	209-51098-40	SUPPORT ASSEMBLY, Hydraulic pressure transmitter complete (see Electrical and Instrument)	1	FR	
-105	209-58866-5	LINE ASSEMBLY, Utility system pressure from bulkhead elbow radar deck station 51.25 to reducer station 70.5	1	FR	
-106	209-58866-3	LINE ASSEMBLY, Utility system return from bulkhead elbow radar deck station 50 to reducer station 70	1	FR	
-107	209-58819-33	LINE ASSEMBLY, Utility system pressure from elbow RH station 53 to elbow LH station 53	1	FR	
-108	209-58819-35	LINE ASSEMBLY, Utility system return from elbow RH station 53 to elbow station 53	1	FR	
-109	209-58835-23	LINE ASSEMBLY, Utility system pressure from elbow station 46.875 to elbow station 51.375	1	FR	
-110	209-58835-25	LINE ASSEMBLY, Utility system return from elbow station 46 to elbow station 49.375	1	FR	
-111	209-58835-85	LINE ASSEMBLY, Utility system pressure from bulkhead tee station 51.375 to elbow station 53	1	FR	
-112	209-58835-35	LINE ASSEMBLY, Utility system pressure from bulkhead tee station 53 to tee in relief valve station 71.75	1	FR	
-113	209-58835-33	LINE ASSEMBLY, Utility system return from bulkhead tee station 53 to tee in relief valve station 71.75	1	FR	
-114	194-58655-11	HYDRAULIC EQUIPMENT ASSEMBLY, Valve utility system relief	1	FR	
	ATTACHING PARTS				
	AN3-21A	BOLT	3	FR	
	2W18-10M	WASHER, Flat (NA) (89372)	3	FR	
	---*---				
	AN6279-6CD	. VALVE	1	FR	
-115	MS21909-6D	. TEE	1	FR	
	AN6290-6	. GASKET	1	FR	
	AN6291-6	. RING	1	FR	
	AN6289-6	. NUT	1	FR	
-116	MS21912D6	. TEE	1	FR	
	AN6290-6	. GASKET	1	FR	
	AN6291-6	. RING	1	FR	
	AN6289-6	. NUT	1	FR	
-117	209-58835-47	LINE ASSEMBLY, Utility system pressure from elbow in selector valve to tee in relief valve station 71.75	1	FR	
-118	209-58835-45	LINE ASSEMBLY, Utility system return from union in selector valve to tee in relief valve station 71.75	1	FR	
-119	209-58621-11	HYDRAULIC EQUIPMENT ASSEMBLY, Valve purge door selector (see figure 159 for breakdown)	1	FR	
	ATTACHING PARTS				
	AN3-16A	BOLT	2	FR	
	AN3-22A	BOLT	2	FR	
	2W18-10M	WASHER, Flat (NA) (89372)	4	FR	
	---*---				
-120	209-58835-81	LINE ASSEMBLY, Utility system return from bulkhead tee station 50 to bulkhead-elbow station 53	1	FR	
-121	209-58835-79	LINE ASSEMBLY, Utility system return from elbow in check valve station 44 to bulkhead tee in thermal relief valve station 50	1	FR	
-122	209-58835-77	LINE ASSEMBLY, Utility system return from elbow in check valve station 44 to bulkhead tee station 50	1	FR	
-123	209-58835-83	LINE ASSEMBLY, Utility system pressure from union in selector valve station 23 to bulkhead tee station 51.375	1	FR	
-124	209-58608	HYDRAULIC EQUIPMENT ASSEMBLY, Valve emergency auxiliary alighting gear accumulator control (see figure 150 for breakdown)	1	FR	
-125	194-58805-47	LINE ASSEMBLY, Utility system return from elbow on dump valve to tee on thermal relief valve	1	FR	

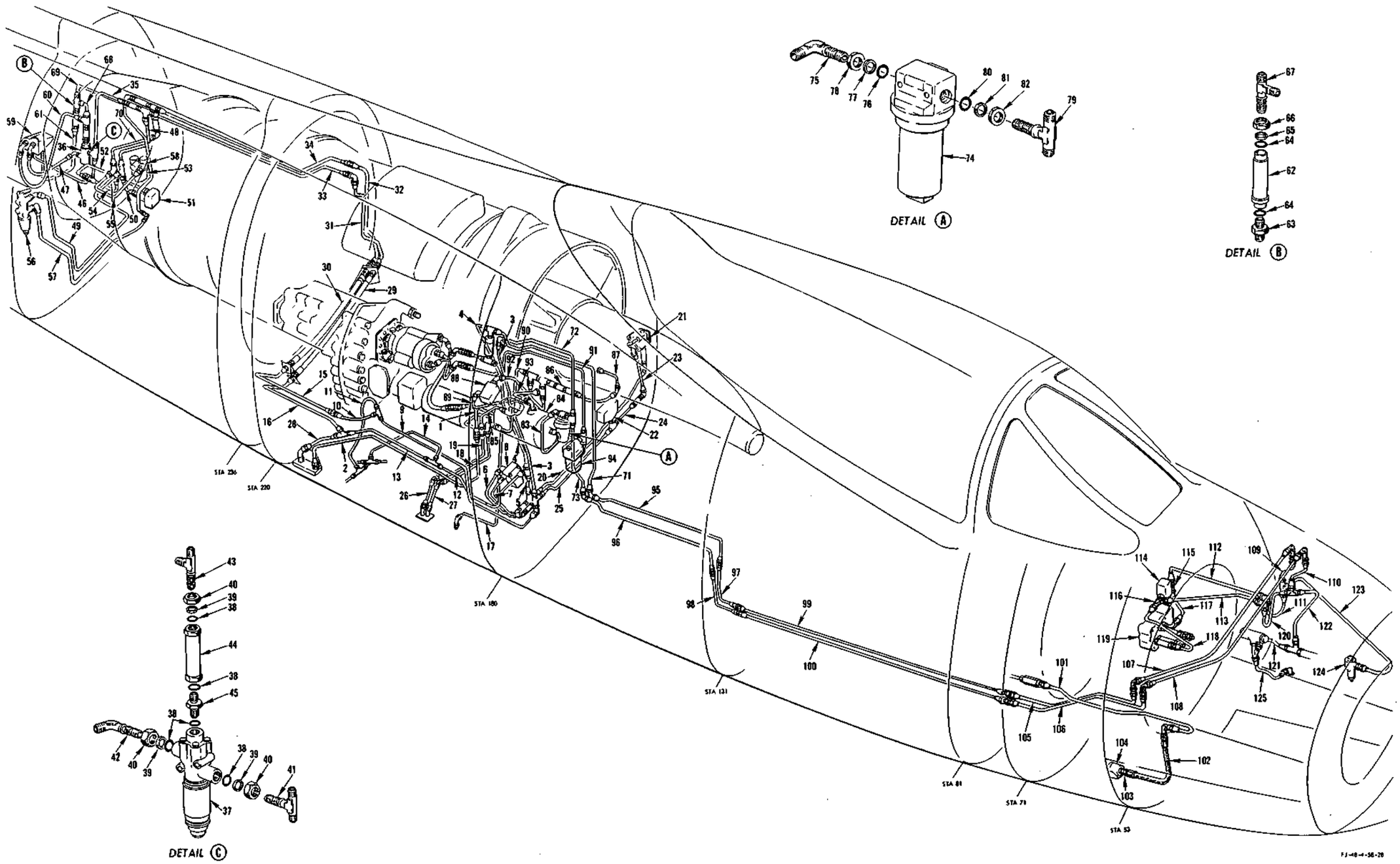

FIGURE 134 - UTILITY SYSTEM LINES AND EQUIPMENT - APPLICABLE TO AIRCRAFT CODED (FR)

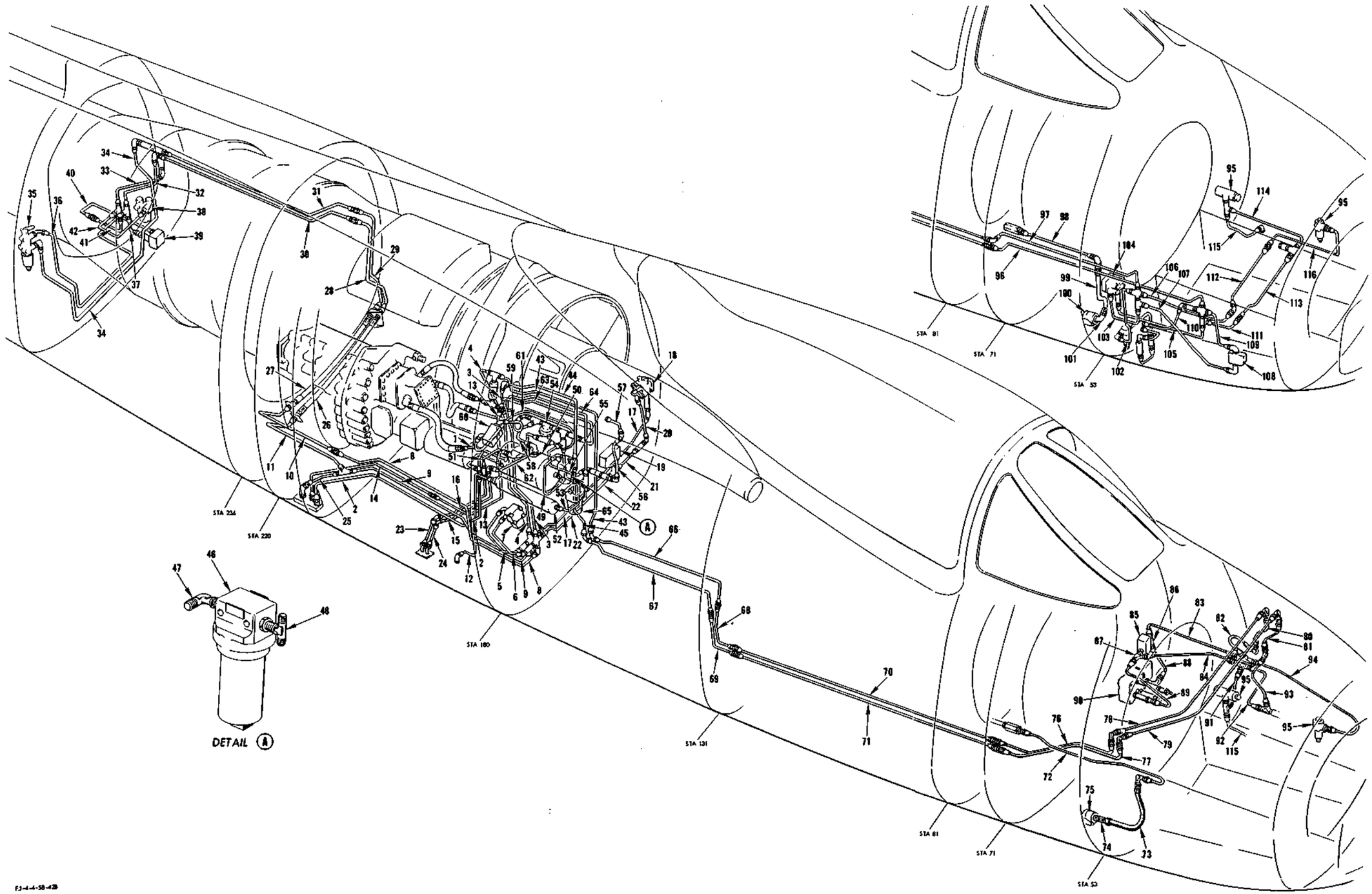

FIGURE 135 - UTILITY SYSTEM LINES AND EQUIPMENT - APPLICABLE TO AIRCRAFT CODED (ET)

UTILITY SYSTEM LINES AND EQUIPMENT - APPLICABLE TO AIRCRAFT CODED (ET)

FIGURE & INDEX NO.	PART NUMBER	1 2 3 4 5 6 7 NOMENCLATURE	UNITS PER ASSY.	USABLE ON CODE	S/C NO.
135-1	209-58319	LINE ASSEMBLY, Hydraulic utility suction fuselage station 180.906 to station 190 RH side	1	ET	
-2	209-58808-65	LINE ASSEMBLY, Utility suction from union station 186 to union ground test panel	1	HU	
	209-58838-79	LINE ASSEMBLY, Utility suction from union station 186 to union ground test panel	1	HV	
-3	209-58838-16	LINE ASSEMBLY, Utility return from elbow wl-14 to cross wl-16	1	ET	
-4	209-58838-19	LINE ASSEMBLY, Utility pressure from tee wl-14 to cross wl-16	1	ET	
-5	209-58808-3	LINE ASSEMBLY, Utility pressure from elbow in check valve to elbow in wingfold valve	1	ET	
-6	209-58808-85	LINE ASSEMBLY, Utility return from elbow in wingfold valve to elbow in check valve	1	ET	
-7	209-58602	HYDRAULIC EQUIPMENT ASSEMBLY, Valve wingfold selector (see figure 164 for complete breakdown)	1	ET	
-8	209-58808-9	LINE ASSEMBLY, Utility return from union station 220.75 to elbow station 180	1	ET	
-9	209-58808-5	LINE ASSEMBLY, Utility pressure from elbow station 180 to tee station 220	1	ET	
-10	209-58838-23	LINE ASSEMBLY, Utility return from elbow station 223 to union at field break disconnect	1	Y	
	209-58838-29	LINE ASSEMBLY, Utility return from union station 223 to union at field break disconnect	1	FS	
-11	209-58838-27	LINE ASSEMBLY, Utility pressure from tee station 220 to union at field break disconnect	1	Y	
	209-58838-31	LINE ASSEMBLY, Utility pressure from tee station 220 to union at field break disconnect	1	FS	
-12	209-58838-11	LINE ASSEMBLY, Utility reservoir drain from elbow station 191 to elbow station 185.5	1	ET	
-13	209-58808-93	LINE ASSEMBLY, Utility air pressure from union station 186 to union station 182	1	M	421
-14	209-58808-73	LINE ASSEMBLY, Utility air pressure from union in ground test panel to union station 186	1	M	421
-15	209-58808-81	LINE ASSEMBLY, Utility reservoir vent from elbow station 180 to union in landing gear deck	1	ET	
-16	209-58808-79	LINE ASSEMBLY, Scupper drain tee wl-3 to union in landing gear deck	1	ET	
-17	209-58811-65	LINE ASSEMBLY, Utility pressure from cross station 182 RH side to deck valve in landing gear selector valve station 181 LH	1	ET	
-18	209-58601	HYDRAULIC EQUIPMENT ASSEMBLY, Valve landing gear selector (see figure 141 for breakdown)	1	ET	
-19	209-58612	HYDRAULIC EQUIPMENT ASSEMBLY, Valve landing gear manual by-pass (see figure 141 for breakdown)	1	ET	
-20	209-58811-59	LINE ASSEMBLY, Utility return from elbow in landing gear selector valve to elbow station 181	1	ET	
-21	209-58811-61	LINE ASSEMBLY, Utility return from union in check valve to tee in landing gear dump valve	1	ET	
-22	209-58811-63	LINE ASSEMBLY, Utility return from tee in landing gear dump valve to cross station 182 RH	1	ET	
-23	209-58824-35	LINE ASSEMBLY, Scupper overboard drain from elbow station 196 to overboard drain station 197	1	ET	
-24	209-58824-37	LINE ASSEMBLY, Utility reservoir drain from elbow station 196 to overboard drain station 197	1	ET	
-25	209-58824-55	LINE ASSEMBLY, Utility system pressure from elbow in test panel station 223 to tee station 219	1	HU	
	209-58824-87	LINE ASSEMBLY, Utility system pressure from elbow in test panel station 223 to tee station 219	1	HV	
-26	AN6292-8-34	HOSE ASSEMBLY (pressure)	1	ET	
-27	MS28741-8-0290	HOSE ASSEMBLY (return)	1	ET	
-28	209-58810-3	LINE ASSEMBLY, Utility system pressure from fitting station 236.5 LH to union station 246.032 LH	1	ET	
-29	209-58810-13	LINE ASSEMBLY, Utility system return from fitting station 236.5 LH to union station 246.032 LH	1	ET	
-30	209-58810-5	LINE ASSEMBLY, Utility system pressure from union station 246.032 to 90° elbow station 286.5	1	ET	
-31	209-58810-15	LINE ASSEMBLY, Utility system return from union station 246.032 to tee station 286.5	1	ET	
-32	209-58810-7	LINE ASSEMBLY, Utility system pressure from elbow station 286.5 to tee in shear web	1	ET	
-33	209-58810-77	LINE ASSEMBLY, Utility system return from tee station 290 to tee in shear web	1	ET	
-34	209-58810-91	LINE ASSEMBLY, Utility system return from check valve in tee in shear web to arresting hook snubber valve	1	ET	
-35	209-58604	HYDRAULIC EQUIPMENT ASSEMBLY, Valve arresting hook selector (see figure 162 for breakdown)	1	ET	
-36	209-58810-11	LINE ASSEMBLY, Utility system pressure from reducer in tee in shear web to arresting hook snubber valve	1	ET	
-37	209-58810-9	LINE ASSEMBLY, Utility system pressure from tee in shear web to reducer in speed brake selector valve	1	ET	
-38	209-58606	HYDRAULIC EQUIPMENT ASSEMBLY, Valve speed brake selector (see figure 153 for breakdown)	1	ET	
-39	209-58610	HYDRAULIC EQUIPMENT ASSEMBLY, Valve speed brake lock (see figure 154 for breakdown)	1	ET	
-40	209-58810-85	LINE ASSEMBLY, Utility system return from union station 298 LH side to speed brake selector valve	1	ET	
-41	209-58810-19	LINE ASSEMBLY, Utility system return from tee in shear web to union station 298 LH side	1	ET	
-42	209-58810-83	LINE ASSEMBLY, Utility system return from tee in shear web to lock valve	1	ET	
-43	209-58807-13	LINE ASSEMBLY, Utility pressure from tee at station 182 to bulkhead elbow station 156	1	ET	

UTILITY SYSTEM LINES AND EQUIPMENT - APPLICABLE TO AIRCRAFT CODED (ET)

FIGURE & INDEX NO.	PART NUMBER	1 2 3 4 5 6 7 NOMENCLATURE	UNITS PER ASSY.	USABLE ON CODE	S/C NO.
135-44	209-58807-19	LINE ASSEMBLY, Utility return from elbow station 182 to utility return line filter	1	ET	
-45	209-58807-31	LINE ASSEMBLY, Utility return from filter to elbow station 156	1	ET	
	194-58659-11	HYDRAULIC EQUIPMENT ASSEMBLY, Filter utility system return	1	ET	
-46	MS28720-8	. FILTER, Hydraulic replaceable micronic element line type 500 to 3000 psi (interchangeable with 50222 (PUP) (81321) or 569408 (Bendix-Skinner Division (90005)) (see figure 169 for breakdown)	1	ET	
-47	MS21908D8	. ELBOW	1	ET	
	AN6290-8	. GASKET	1	ET	
	AN6291-8	. RING	1	ET	
	AN6289-8D	. NUT	1	ET	
-48	MS21909D8	. TEE	1	ET	
	AN6290-8	. GASKET	1	ET	
	AN6291-8	. RING	1	ET	
	AN6289-8D	. NUT	1	ET	
-49	194-58807-29	LINE ASSEMBLY, Utility return from filter to utility reservoir	1	ET	
-50	194-58651-11	HYDRAULIC EQUIPMENT ASSEMBLY, Reservoir utility system (see figure 140 for breakdown)	1	ET	
	ATTACHING PARTS				
	16146	CLAMP (MAR) (98625)	2	ET	
	---*---				
-51	209-58807-3	LINE ASSEMBLY, Scupper drain from union in scupper to tee station 182	1	ET	
	194-58690	HYDRAULIC EQUIPMENT ASSEMBLY, Reservoir air storage	1	M	421
	ATTACHING PARTS				
	16146	CLAMP (MAR) (98625)	2	M	421
	---*---				
-52	165-58060	. RESERVOIR ASSEMBLY, Hydraulic air storage	1	M	421
	AN814-4D	. PLUG	1	M	421
	MS21902D4	. UNION	1	M	421
	AN6290-4	. GASKET	2	M	421
-53	209-58807-5	LINE ASSEMBLY, Air pressure from union in air storage tank to tee at station 189.5	1	M	421
-54	209-58626	HYDRAULIC EQUIPMENT ASSEMBLY, Valve utility reservoir pressurization (see figure 139 for breakdown)	1	M	421
	209-58626-11	HYDRAULIC EQUIPMENT ASSEMBLY, Valve utility reservoir pressurization (see figure 139 for breakdown)	1	FG	421
	209-58625	HYDRAULIC EQUIPMENT ASSEMBLY, Valve utility reservoir pressurization (see figure 139 for breakdown)	1	HH	
-55	209-58807-9	LINE ASSEMBLY, Air pressure bulkhead elbow in air filter to tee at station 169.5	1	M	421
-56	209-58807-7	LINE ASSEMBLY, Air pressure bulkhead union BL 12 to elbow in air filter	1	M	421
	209-58807-39	LINE ASSEMBLY, Air pressure from union in air filter to bulkhead union BL 12	1	N	421
-57	209-58807-23	LINE ASSEMBLY, Air pressure from fitting on engine air duct to bulkhead elbow	1	ET	
-58	209-58807-35	LINE ASSEMBLY, Reservoir air from air regulator to elbow top of reservoir	1	DH	
	209-58807-45	LINE ASSEMBLY, Reservoir air from tee to 90° elbow top of reservoir	1	HH	
-59	209-58807-37	LINE ASSEMBLY, Reservoir air from air regulator to air dump valve	1	DH	
	209-58807-47	LINE ASSEMBLY, Reservoir air from tee in valve to 98° elbow in dump valve	1	HH	
-60	194-58658	HYDRAULIC EQUIPMENT ASSEMBLY, Valve utility	1	ET	
	870629	. VALVE, Hydraulic relief (WK) (33525)	1	ET	
	MS21908D4	. ELBOW	2	ET	
	AN6290-4	. GASKET	2	ET	
	AN6291-4	. RING	2	ET	
	AN6289-4	. NUT	2	ET	
-61	209-58807-33	LINE ASSEMBLY, Reservoir air vent from dump valve to tee in air regulator	1	DH	
	209-58807-43	LINE ASSEMBLY, Reservoir air vent from 90° elbow in dump valve to reducer in tee	1	HH	
-62	194-58807-37	LINE ASSEMBLY, Reservoir vent from tee in air regulator to elbow station 185	1	DH	
	209-58807-41	LINE ASSEMBLY, Reservoir vent from tee in valve to 90° elbow station 182	1	HH	
-63	209-58807-21	LINE ASSEMBLY, From union station 184 to check valve station 165 test stand air pressure	1	M	421
-64	209-58807-17	LINE ASSEMBLY, Utility case drain bulkhead union station 190 to elbow in brake-return filter	1	ET	
-65	194-58660-11	HYDRAULIC EQUIPMENT ASSEMBLY, Filter brake return (see figure 163 for breakdown)	1	ET	
-66	209-58806-55	LINE ASSEMBLY, Utility system pressure from station 156 to union station 131	1	BH	
	209-58836-55	LINE ASSEMBLY, Utility system pressure from union station 131 to elbow station 156	1	CZ	
	209-58866-45	LINE ASSEMBLY, Utility system pressure from union station 131 to bulkhead elbow station 156	1	HA	
-67	209-58806-61	LINE ASSEMBLY, Utility system return from union station 131 to elbow station 156	1	BH	
	209-58836-51	LINE ASSEMBLY, Utility system return from union station 131 to elbow station 156	1	CZ	
	209-58866-41	LINE ASSEMBLY, Utility system return from union station 131 to bulkhead elbow station 156	1	HA	
-68	209-58806-45	LINE ASSEMBLY, Utility system pressure from union station 131 to union station 116	1	BH	
	209-58836-65	LINE ASSEMBLY, Utility system pressure from union station 116 to union station 131	1	HT	
-69	209-58806-53	LINE ASSEMBLY, Utility system return from union station 116 to union station 131	1	BH	
	209-58836-63	LINE ASSEMBLY, Utility system return from union station 116 to union station 131	1	HT	
-70	209-58836-33	LINE ASSEMBLY, Utility system pressure from union station 116 to elbow station 64	1	ET	
-71	209-58836-35	LINE ASSEMBLY, Utility system return from union station 65 to union station 116	1	ET	

UTILITY SYSTEM LINES AND EQUIPMENT - APPLICABLE TO AIRCRAFT CODED (ET)

FIGURE & INDEX NO.	PART NUMBER	1 2 3 4 5 6 7 NOMENCLATURE	UNITS PER ASSY.	USABLE ON CODE	S/C NO.
135-72	209-58836-95	LINE ASSEMBLY, Utility system pressure from reducer station 62 to elbow station 51	1	HA	449
	209-58866-75	LINE ASSEMBLY, Utility system pressure from reducer in snubber station 62 to elbow	1	HA	
-73	MS28751-4-0124	HOSE ASSEMBLY (pressure)	1	HA	449
	MS28751-4-0170	HOSE ASSEMBLY (pressure)	1	HA	
-74	MS21902D4	UNION	1	HA	
	AN6290-4	GASKET	1	HA	
-75	209-51098-40	SUPPORT ASSEMBLY, Hydraulic pressure transmitter complete (see Electrical and Instrument)	1	HA	
-76	209-58866-5	LINE ASSEMBLY, Utility system pressure from bulkhead elbow	1	HA	
-77	209-58866-3	LINE ASSEMBLY, Utility system return from bulkhead elbow radar deck station 50 to reducer station 70	1	HA	
-78	209-58819-33	LINE ASSEMBLY, Utility system pressure from elbow RH station 53 to elbow LH station 53	1	HA	
-79	209-58819-35	LINE ASSEMBLY, Utility system return from elbow RH station 53 to elbow LH station 53	1	HA	
-80	209-58835-23	LINE ASSEMBLY, Utility system pressure from elbow station 46.875 to elbow station 51.375	1	HA	
-81	209-58835-25	LINE ASSEMBLY, Utility system return from elbow station 46 to elbow station 49.375	1	HA	
-82	209-58835-17	LINE ASSEMBLY, Utility system pressure from tee bulkhead station 53 to elbow station 51.375	1	EF	357
	209-58835-85	LINE ASSEMBLY, Utility system pressure from bulkhead tee station 51.375 to elbow station 53	1	FX	
-83	209-58835-35	LINE ASSEMBLY, Utility system pressure from bulkhead tee station 53 to tee in relief valve station 71.75	1	HA	
-84	209-58835-33	LINE ASSEMBLY, Utility system return from bulkhead tee station 53 to tee in relief valve station 71.75	1	HA	
-85	194-59655-11	HYDRAULIC EQUIPMENT ASSEMBLY, Valve utility system relief	1	HA	
	ATTACHING PARTS				
	AN3-21A	BOLT	3	HA	
	2W18-10M	WASHER, Flat (NA) (89372)	3	HA	
	---*---				
	AN6279-6CD	. VALVE	1	HA	
-86	MS21909-6D	. TEE	1	HA	
	AN6290-6	. GASKET	1	HA	
	AN6291-6	. RING	1	HA	
	AN6289-6	. NUT	1	HA	
-87	MS21912D6	. TEE	1	HA	
	AN6290-6	. GASKET	1	HA	
	AN6291-6	. RING	1	HA	
	AN6289-6	. NUT	1	HA	
-88	209-58835-47	LINE ASSEMBLY, Utility system pressure from elbow in selector valve to tee in relief valve station 71.75	1	HA	
-89	209-58835-45	LINE ASSEMBLY, Utility system return from union in selector valve to tee in relief valve station 71.75	1	HA	
-90	209-58621-11	HYDRAULIC EQUIPMENT ASSEMBLY, Valve purge door selector (see figure 159 for breakdown)	1	HA	
	ATTACHING PARTS				
	AN3-16A	BOLT	2	HA	
	AN3-22A	BOLT	2	HA	
	2W18-10M	WASHER, Flat (NA) (89372)	4	HA	
	---*---				
-91	209-58835-11	LINE ASSEMBLY, Utility system return from tee station 51 to tee station 52	1	EF	357
	209-58835-81	LINE ASSEMBLY, Utility system return from bulkhead tee station 50 to bulkhead elbow station 53	1	FX	
-92	209-58835-15	LINE ASSEMBLY, Utility system return from tee station 45 to tee in bulkhead station 53	1	EF	357
	209-58835-79	LINE ASSEMBLY, Utility system return from elbow in check valve station 44 to bulkhead tee in thermal relief valve station 50	1	FX	
-93	209-58835-13	LINE ASSEMBLY, Utility system return from tee station 45 to elbow station 49.375	1	EF	357
	209-58835-77	LINE ASSEMBLY, Utility system return from elbow in check valve station 44 to bulkhead tee station 50	1	FX	
-94	209-58835-9	LINE ASSEMBLY, Utility system pressure from union in selector valve station 23 to tee bulkhead station 53	1	EF	357
	209-58835-83	LINE ASSEMBLY, Utility system pressure from union in selector valve station 23 to bulkhead tee station 51.375	1	FX	
-95	194-58608	HYDRAULIC EQUIPMENT ASSEMBLY, Valve emergency nose gear accumulator control (see figure 150 for breakdown)	1	BR	
	209-58608	HYDRAULIC EQUIPMENT ASSEMBLY, Valve emergency nose gear accumulator control (see figure 150 for breakdown)	1	FX	
-96	209-58836-71	LINE ASSEMBLY, Utility system return from union station 35 to union station 65	1	BJ	366
-97	209-58806-23	LINE ASSEMBLY, Utility system pressure from elbow station 64 to union station 43	1	BH	366
-98	209-58806-27	LINE ASSEMBLY, Utility system pressure from reducer station 62 to elbow station 51	1	BJ	366
-99	MS28751-4-0144	HOSE ASSEMBLY (pressure)	1	BJ	366
-100	209-58660-11	HYDRAULIC EQUIPMENT ASSEMBLY, Transmitter utility and flight control system No. 1 and No. 2 pressure (see Electrical and Instrument)	1	BJ	366
	ATTACHING PARTS				
	AN520-10R8	SCREW	4	BJ	366
	2W18-10M ---*---	WASHER, Flat (NA) (89372)	4	BJ	366

UTILITY SYSTEM LINES AND EQUIPMENT - APPLICABLE TO AIRCRAFT CODED (ET)

FIGURE & INDEX NO.	PART NUMBER	1 2 3 4 5 6 7 NOMENCLATURE	UNITS PER ASSY.	USABLE ON CODE	S/C NO.
135	209-51098	. SUPPORT ASSEMBLY, Hydraulic pressure transmitter complete (see Electrical and Instrument)	1	BJ	366
-101	MS21908D4	. ELBOW	1	BJ	366
	AN6289-4	. NUT	1	BJ	366
	AN6291-4	. RING	1	BJ	366
	AN6290-4	. GASKET	1	BJ	366
-102	209-58806-19	LINE ASSEMBLY, Utility system pressure from union station 46 to elbow station 53	1	AD	366
-103	209-58806-13	LINE ASSEMBLY, Utility system pressure from reducer station 43 to reducer station 45	1	BJ	366
-104	209-58621	HYDRAULIC EQUIPMENT ASSEMBLY, Valve purge door selector (see figure 158 for breakdown)	1	BJ	366
-105	209-58806-11	LINE ASSEMBLY, Utility system return from reducer station 35 to reducer station 45	1	BJ	366
-106	209-58806-17	LINE ASSEMBLY, Utility system pressure from reducer station 43 to elbow station 32	1	BJ	366
-107	209-58806-21	LINE ASSEMBLY, Utility system pressure from tee station 43 to elbow station 20	1	BJ	366
-108	194-58655	HYDRAULIC EQUIPMENT ASSEMBLY, Valve utility system relief	1	BJ	366
	MS21908D6	. ELBOW	2	BJ	366
	AN6290-6	. GASKET	2	BJ	366
	AN6291-6	. RING	2	BJ	366
	AN6289-6	. NUT	2	BJ	366
	AN6279-6CD	. VALVE	1	BJ	366
-109	209-58806-5	LINE ASSEMBLY, Utility system return from elbow station 20 to reducer station 33	1	BJ	366
-110	209-58806-15	LINE ASSEMBLY, Utility system return from elbow station 53 to elbow station 40	1	AD	366
-111	209-58806-3	LINE ASSEMBLY, Utility system return from union station 28 to tee station 33	1	BJ	366
-112	194-58816-13	LINE ASSEMBLY, Utility system pressure from elbow station 30.5 RH side to elbow station 31.5 LH side	1	BJ	284, 366
-113	209-58816-17	LINE ASSEMBLY, Utility system return from union LH side to union RH side station 28	1	BJ	366
-114	209-58805-3	LINE ASSEMBLY, Utility system return from tee station 51 to reducer station 27.75	1	BJ	366
-115	194-58805-47	LINE ASSEMBLY, Utility system return from elbow on dump valve to tee on thermal relief valve	1	ET	
-116	194-58805-7	LINE ASSEMBLY, Utility system pressure from elbow station 31.5 to selector valve station 23	1	BJ	357, 366

UTILITY SYSTEM FITTINGS AND PUMP ASSEMBLY - APPLICABLE TO AIRCRAFT CODED (ET)

FIGURE & INDEX NO.	PART NUMBER	1 2 3 4 5 6 7 NOMENCLATURE	UNITS PER ASSY.	USABLE ON CODE	S/C NO.
136-1	6087D4	NUT, Self-locking high temperature (Wright Aeronautical Corp) (66840)	4	ET	
-2	AN122584	WASHER	4	ET	
-3	AN4044-1	GASKET	1	ET	
-4	209-58650-31	HYDRAULIC EQUIPMENT ASSEMBLY, Pump (209-58650-31 together with attaching hoses and fitting is interchangeable with 209-58651 and its attaching hoses and fittings)	1	ET	
-5	AA-65306-RC	. PUMP ASSEMBLY, Variable delivery (VI) (62983) (supersedes AA-65306-R (VI) (62983) AA-60306-RB (VI) (62983) for future procurement) (AA-65306-R (VI) (62983) and AA-60306-RB (VI) (62983) supersedes AA-60306-R (VI) (62983) for future procurement	1	ET	
-6	209-58122	. FITTING, Hydraulic bulkhead 90° elbow	1	ET	
	AN6290-6	. GASKET	1	ET	
	AN6291-6	. RING	1	ET	
	AN6289-6	. NUT	1	ET	
-7	AN834-4D	. TEE	1	ET	
	AN6290-4	. GASKET	1	ET	
	AN6291-4	. RING	1	ET	
	AN6289-4	. NUT	1	ET	
-8	MS28741-12-0134	HOSE ASSEMBLY (suction) (used on 209-58650-31)	1	ET	
-9	187-58368-5	TAG, Hydraulic hose assembly identification (utility suction)	1	ET	
-10	150-S1-12	COUPLING HALF, Self-sealing (AQ) (00624) (used on 209-58650-31)	1	ET	
	C155-25-12	NUT, Union (AQ) (00624) (used on 209-58650-31)	1	ET	
-11	MS28741-6-0160	HOSE ASSEMBLY (drain) (used on 209-58650-31)	1	ET	
-12	187-58368-19	TAG, Hydraulic hose assembly identification (utility case drain)	1	ET	
-13	150-S1-6	COUPLING HALF, Self-sealing (AQ) (00624) (used on 209-58650-31)	1	ET	
	C155-25-8	NUT, Union (AQ) (00624) (used on 209-58650-31)	1	ET	
-14	AN6292-8-18-1/2	HOSE ASSEMBLY (pressure) (used on 209-58650-31)	1	ET	
-15	181-58269-3	TAG, Hydraulic hose assembly identification (utility pressure)	1	ET	
-16	150-S1-8	COUPLING HALF, Self-sealing (AQ) (00624) (used on 209-58650-31)	1	ET	
	C155-25-8	NUT, Union (AQ) (00624) (used on 209-58650-31)	1	ET	
-17	209-58651	HYDRAULIC EQUIPMENT ASSEMBLY, Pump engine driven variable delivery (209-58651 together with attaching hoses and fittings is interchangeable with 209-58650-31 and its attaching hoses and fittings)	1	ET	
-18	66WT200-1	. PUMP ASSEMBLY, Variable delivery (NYB) (43491)	1	ET	
-19	AN837-6D	. ELBOW	1	ET	
	AN6290-6	. GASKET	1	ET	
	AN6291-6	. RING	1	ET	
	AN6289-6	. NUT	1	ET	
-20	AN834-4D	. TEE	1	ET	
	AN6290-4	. GASKET	1	ET	
	AN6291-4	. RING	1	ET	
	AN6289-4	. NUT	1	ET	
-21	AN893-151D	. REDUCER	1	ET	
	AN6290-10	. GASKET	1	ET	
	AN833-8D	. ELBOW	1	ET	
	AN6290-8	. GASKET	1	ET	
	AN6291-8	. RING	1	ET	
	AN6289-8D	. NUT	1	ET	
-22	AN837-12D	. ELBOW	1	ET	
	AN6290-12	. GASKET	1	ET	
	AN6291-12	. RING	1	ET	
	AN6289-12D	. NUT	1	ET	
-23	MS28741-6-0113	HOSE ASSEMBLY (drain) (used on 209-58651)	1	ET	
-24	150-S1-6	COUPLING HALF, Self-sealing (AQ) (00624) (used on 209-58651)	1	ET	
	C155-25-8	NUT, Union (AQ) (00624) (used on 209-58651)	1	ET	
	AN815D6	UNION (used on 209-58651)	1	ET	
	AN939D6	ELBOW (used on 209-58651)	1	ET	
	AN6290-6	GASKET (used on 209-58651)	2	ET	
-25	AN6292-8-14-1/2	HOSE ASSEMBLY (pressure) (used on 209-58651)	1	ET	
-26	150-S1-8	COUPLING HALF, Self-sealing (AQ) (00624) (used on 209-58651)	1	ET	
	C155-25-8	NUT, Union (AQ) (00624) (used on 209-58651)	1	ET	
	AN815D8	UNION (used on 209-58651)	1	ET	
	AN939D8	ELBOW (used on 209-58651)	1	ET	
	AN6290-8	GASKET (used on 209-58651)	2	ET	
-27	MS28741-12-0127	HOSE ASSEMBLY (suction) (used on 209-58651)	1	ET	
-28	150-S1-12	COUPLING HALF, Self-sealing (AQ) (00624) (used on 209-58651)	1	ET	
	C155-25-12	NUT, Union (AQ) (00624) (used on 209-58651)	1	ET	
	AN815D12	UNION (used on 209-58651)	1	ET	
	AN939D12	ELBOW (used on 209-58651)	1	ET	
	AN6290-12	GASKET (used on 209-58651)	2	ET	
-29	3005-S4-12D	COUPLING HALF, Self-sealing (AQ) (00624)	1	ET	
-30	3005-S4-6D	COUPLING HALF, Self-sealing (AQ) (00624)	1	ET	
-31	3005-S4-8D	COUPLING HALF, Self-sealing (AQ) (00624)	1	ET	
	ATTACHING PARTS				
	AN520-10R10	SCREW	9	ET	
	2W18-10	WASHER, Flat (NA) (39372)	18	ET	
	AN365-1032	NUT	9	ET	
	---*---				
-32	MS21902D12	UNION	1	ET	
-33	209-58620	HYDRAULIC EQUIPMENT ASSEMBLY, Valve utility system priority	1	ET	
-34	AN6280-8	. VALVE	1	ET	
-35	AN6290-8	. GASKET	4	ET	
-36	AN6291-8	. RING	2	ET	
-37	AN6289D8	. NUT	2	ET	

UTILITY SYSTEM FITTING AND PUMP ASSEMBLY - APPLICABLE TO AIRCRAFT CODED (ET)

FIGURE & INDEX NO.	PART NUMBER	1 2 3 4 5 6 7 NOMENCLATURE	UNITS PER ASSY.	USABLE ON CODE	S/C NO.
136-38	MS21911D8	. TEE	1	ET	
-39	MS21916D8-6	. REDUCER	1	ET	
-40	26710-8	. VALVE ASSEMBLY, Hydraulic priority (HYRM) (81873) (interchangeable with A6020-8 (VNMB) (91130))	1	ET	
-41	MS21909D8	. TEE	1	ET	
-42	MS21904D8	ELBOW	1	ET	
-43	MS21902D8	UNION	2	ET	
-44	AN6290-8	GASKET	8	ET	
-45	AN937D8	CROSS	2	ET	
-46	MS21916D8-6	REDUCER	4	ET	
-47	MS21908D8	ELBOW	2	ET	
-48	AN6291-8	RING	2	ET	
-49	AN6289D8	NUT	2	ET	
-50	AN6290-6	GASKET	4	ET	
-51	AN6289-6	VALVE	2	ET	
-52	AN6291-6	RING	2	ET	
-53	AN6289-6	NUT	2	ET	
-54	MS21907D6	ELBOW	2	ET	
-55	MS21902D8	UNION	1	ET	
-56	MS21905D8	TEE	1	ET	
-57	3005-S4-8D	COUPLING HALF, Self-sealing (AQ) (00624)	2	ET	
	ATTACHING PARTS				
	AN520-10R10	SCREW	6	ET	
	2W18-10	WASHER, Flat (NA) (89372)	12	ET	
	AN365-1032	NUT	6	ET	
	---*---				
-58	MS21902D6	UNION	1	ET	
	AN6290-6	GASKET	2	ET	
	AN939-6D	ELBOW	1	ET	
-59	AN832-6D	UNION	1	ET	
	AN924-6D	NUT	1	ET	
-60	MS21902D4	UNION	2	M	421
-61	MS21904D6	ELBOW	1	ET	
-62	MS21905D6	TEE	1	ET	
-63	MS21907D6	ELBOW	2	ET	
	2W18-916	WASHER, Flat (NA) (89372)	2	ET	
	AN924-6D	NUT	2	ET	
-64	181-58370	CAP ASSEMBLY, Hydraulic flared tube fitting	1	ET	
-65	MS21908D6	ELBOW	1	ET	
	AN6289-6	NUT	1	ET	
	AN6291-6	RING	1	ET	
	AN6290-6	GASKET	2	ET	
	AN6280-6	VALVE	1	ET	
	MS21902D6	UNION	1	ET	
-66	MS21902D6	UNION	2	ET	
-67	3055-S11-8D	COUPLING HALF, Self-sealing (AQ) (00624)	1	ET	
	ATTACHING PARTS				
	AN520-10R10	SCREW	3	ET	
	2W18-10M	WASHER, Flat (NA) (89372)	6	ET	
	AN365-1032	NUT	3	ET	
	---*---				
	MS21902D8	UNION	1	ET	
	AN6290-8	GASKET	2	ET	
	AN941D8	ELBOW	1	ET	
	AN6291-8	RING	1	ET	
	AN6289D8	NUT	1	ET	
-68	3055-S11-12D	COUPLING HALF, Self-sealing (AQ) (00624)	1	ET	
	ATTACHING PARTS				
	AN520-10R10	SCREW	3	ET	
	2W18-10M	WASHER, Flat (NA) (89372)	6	ET	
	AN365-1032	NUT	3	ET	
	---*---				
-69	157-58414	CAP ASSEMBLY, Hydraulic disconnect panel air pressurizing	1	M	421
	MS21901D4	ADAPTER	1	M	421
	AN924-4D	NUT	1	M	421
-70	209-58296-2	DRAIN ASSEMBLY, Hydraulic fluid overboard RH	1	DE	
	209-58296-102	DRAIN ASSEMBLY, Hydraulic fluid overboard RH	1	HY	
-71	150-S1-8	COUPLING HALF, Self-sealing (AQ) (00624)	2	ET	
	C155-25-8	NUT, Union (AQ) (00624)	2	ET	
-72	MS21901D8	ADAPTER	2	ET	
	AN924-8D	NUT	2	ET	
-73	MS21903-8	UNION	2	ET	
	AN924-8	NUT	2	ET	
	2W18-1216	WASHER, Flat (NA) (89372)	2	ET	
-74	MS21908-8	ELBOW	1	ET	
-75	MS21911-8	TEE	1	ET	
	AN924-8	NUT	1	ET	
	2W18-1216	WASHER, Flat (NA) (89372)	1	ET	
	AN2690-8	GASKET	2	ET	
-76	AN6280-8	VALVE	1	ET	
	AN6290-8	GASKET	1	ET	
	AN6291-8	RING	1	ET	
	AN6289-8	NUT	1	ET	

UTILITY SYSTEM FITTINGS AND PUMP ASSEMBLY - APPLICABLE TO AIRCRAFT CODED (ET)

FIGURE & INDEX NO.	PART NUMBER	1 2 3 4 5 6 7 NOMENCLATURE	UNITS PER ASSY.	USABLE ON CODE	S/C NO.
136	MS21907-8	ELBOW	1	ET	
-77	MS21916D8-8	REDUCER	1	ET	
	AN6290-6	GASKET	1	ET	
	AN6280-6	VALVE	1	ET	
-78	MS21908-6	ELBOW	1	ET	
	AN6290-6	GASKET	1	ET	
	AN6291-6	RING	1	ET	
	AN6289-6	NUT	1	ET	
-79	MS21910-8	TEE	1	ET	
	AN6290-8	GASKET	1	ET	
	MS21916-8-16	REDUCER	1	ET	
	AN924-8D	NUT	1	ET	
-80	MS21912-8	TEE	1	ET	
	AN924-8D	NUT	1	ET	
-81	MS21902D8	UNION	1	ET	
-82	MS21908D8	ELBOW	1	ET	
	2W18-1216	WASHER, Flat (NA) (89372)	1	ET	
	2W1V49-32-62	WASHER, Plain (NA) (89372)	1	ET	
	AN924-8D	NUT	1	ET	
-83	MS21907D8	ELBOW	1	ET	
	2W18-1216	WASHER, Flat (NA) (89372)	1	ET	
	2W1V49-32-62	WASHER, Plain (NA) (89372)	1	ET	
	AN924-8D	NUT	1	ET	
-84	MS21908D4	ELBOW	1	M	421
-85	AN6289-4	NUT	1	M	421
-86	AN6291-4	RING	1	M	421
-87	AN6290-4	GASKET	2	M	421
-88	MS21916D6-4	REDUCER	1	M	421
-89	AN6290-6	GASKET	2	M	421
-90	311826-1	VALVE ASSEMBLY, High temperature swing check (GPC) (24988)	1	M	421
-91	MS21916D6-4	REDUCER	1	M	421
-92	39645	FILTER, Air (PUP) (81321)	1	M	421
-93	MS21907D4	ELBOW	1	ET	
	2W18-716	WASHER, Flat (NA) (89372)	1	ET	
	2W1V29-22-62	WASHER, Plain (NA) (89372)	1	ET	
	AN924-4D	NUT	1	ET	
-94	MS21902D8	UNION	4	ET	
-95	MS21902D8	UNION	1	BJ	366
-96	MS21904D8	ELBOW	1	BJ	366
-97	MS21916D8-6	REDUCER	2	HA	
-98	18D02	SNUBBER (OPS) (76906)	1	ET	
	AN6290-4	GASKET	2	ET	
	MS21915D6-4	BUSHING	1	ET	
	MS21902D4	UNION	1	ET	
-99	MS21907D4	ELBOW	1	BJ	366
	2W18-716	WASHER, Flat (NA) (89372)	1	BJ	366
	AN924-4D	NUT	1	BJ	366
-100	MS21908-4D	ELBOW	1	HA	449
	MS21907D4	ELBOW	1	HA	
	2W18-716	WASHER, Flat (NA) (89372)	1	HA	
	AN924-4D	NUT	1	HA	
-101	AN924-8D	NUT	2	BJ	366
-102	2W18-1216	WASHER, Flat (NA) (89372)	2	BJ	366
-103	MS21903D8	UNION	2	BJ	366
-104	AN937D8	CROSS	2	AD	284
	MS21902D8	UNION	1	AD	284
	AN6290-8	GASKET	2	AD	284
-105	AN938D8	TEE	2	BV	284, 366
-106	MS21916D8-6	REDUCER	2	BJ	366
-107	AN893-12D	BUSHING	2	BJ	366
-108	AN6290-8	GASKET	6	BJ	284, 366
-109	AN6290-6	GASKET	4	BJ	366
-110	AN6291-6	RING	2	BJ	366
-111	AN6289-6	NUT	2	BJ	366
-112	MS21911D6	TEE	2	BJ	366
-113	MS21916D6-4	REDUCER	2	BJ	366
-114	AN6280-6	VALVE	1	AD	284
-115	MS21908D6	ELBOW	1	AD	284
	AN6290-6	GASKET	2	AD	284
	AN6291-6	RING	1	AD	284
	AN6289-6	NUT	1	AD	284
-116	MS21908D6	ELBOW	4	HA	366
	2W18-916	WASHER, Flat (NA) (89372)	8	HA	366
	AN924-6D	NUT	4	HA	366
-117	MS21907D6	ELBOW	1	BJ	366
	2W18-916	WASHER, Flat (NA) (89372)	2	BJ	366
	AN924-6D	NUT	1	BJ	366
-118	MS21903D6	UNION	1	BJ	366
	AN924-6D	NUT	1	BJ	366
-119	MS21907D6	ELBOW	1	BJ	366
	2W18-916	WASHER, Flat (NA) (89372)	1	BJ	366
	AN924-6D	NUT	1	BJ	366
-120	MS21912D4	TEE	1	ET	
	AN6289-4	NUT	1	ET	

UTILITY SYSTEM FITTINGS AND PUMP ASSEMBLY - APPLICABLE TO AIRCRAFT CODED (ET)

FIGURE & INDEX NO.	PART NUMBER	1 2 3 4 5 6 7 NOMENCLATURE	UNITS PER ASSY.	USABLE ON CODE	S/C NO.
136	AN6291-4	RING	1	ET	
	AN6290-4	GASKET	1	ET	
-121	AN924-6D	NUT	1	BJ	366
-122	2W18-916	WASHER, Flat (NA) (89372)	1	BJ	366
-123	MS21911D6	TEE	1	BJ	366
-124	AN6290-6	GASKET	3	BJ	366
-125	MS21916D6-4	REDUCER	1	BJ	366
-126	AN6280-6	VALVE	1	BJ	366
-127	AN6291-6	RING	1	BJ	366
-128	AN6289-6	NUT	1	BJ	366
-129	MS21908D6	ELBOW	1	BJ	366
-130	MS21908D6	ELBOW	1	EF	357
	MS21912D6	TEE	1	HA	
	2W18-916	WASHER, Flat (NA) (89372)	1	HA	
	AN924-6D	NUT	1	HA	
-131	MS21908D6	ELBOW	1	EF	357
	MS21909D6	TEE	1	FX	
	2W18-916	WASHER, Flat (NA) (89372)	1	HA	
	AN924-6D	NUT	1	HA	
-132	MS21912D6	TEE	1	EF	357
	MS21908D6	ELBOW	1	FX	
	2W18-916	WASHER, Flat (NA) (89372)	1	HA	
	AN924-6D	NUT	1	HA	
-133	MS21910D6	TEE	1	EF	357
	MS21916D6-4	REDUCER	1	EF	357
	AN6290-6	GASKET	1	EF	357
	MS21908D6	ELBOW	1	FX	
	2W18-916	WASHER, Flat (NA) (89372)	1	HA	
	AN924-6D	NUT	1	HA	
-134	194-58655-11	HYDRAULIC ASSEMBLY, Valve utility system relief	1	HA	
	ATTACHING PARTS				
	AN3-21A	BOLT	3	HA	
	2W18-10	WASHER, Flat (NA) (89372)	3	HA	
	---+---				
	AN6279-6CD	. VALVE	1	HA	
-135	MS21909-6D	. TEE	1	HA	
	AN6290-6	. GASKET	1	HA	
	AN6291-6	. RING	1	HA	
	AN6289-6	. NUT	1	HA	
-136	MS21912D6	. TEE	1	HA	
	AN6290-6	. GASKET	1	HA	
	AN6291-6	. RING	1	HA	
	AN6289-6	. NUT	1	HA	

UTILITY SYSTEM FITTINGS AND PUMP ASSEMBLY - APPLICABLE TO AIRCRAFT CODED (FR)

FIGURE & INDEX NO.	PART NUMBER	1 2 3 4 5 6 7 NOMENCLATURE	UNITS PER ASSY.	USABLE ON CODE	S/C NO.
137-1	6087D4	NUT, Self locking high temperature (Wright Aeronautical Corp) (66640)	4	FR	
-2	AN122584	WASHER	4	FR	
-3	AN4044-1	GASKET	1	FR	
-4	209-58652	HYDRAULIC EQUIPMENT ASSEMBLY, Pump engine driven variable volume (interchangeable with 209-58645)	1	FR	
-5	65WB06006-2	. PUMP, Hydraulic variable volume (NYB) (43491) supersedes 65WB06006-1 (NYB) (43491) which supersedes 65WB06006 (NYB) (43491) for future procurement)	1	FR	
-6	AN834-4D	. TEE	1	FR	
	AN6290-4	. GASKET	1	FR	
	AN6291-4	. RING	1	FR	
	AN6289-4	. NUT	1	FR	
-7	AN833-6D	. ELBOW	1	FR	
	AN6290-6	. GASKET	1	FR	
	AN6291-6	. RING	1	FR	
	AN6289-6	. NUT	1	FR	
-8	MS28741-6-0134	. HOSE ASSEMBLY (drain)	1	FR	
-9	187-58368-19	. TAG, Hydraulic hose assembly identification (utility case drain)	1	FR	
-10	AN833-16D	. ELBOW	1	FR	
	AN6290-16	. GASKET	1	FR	
	AN6291-16	. RING	1	FR	
	AN6289-16D	. NUT	1	FR	
-11	601402-16D-0182	. HOSE ASSEMBLY (suction) (AQ) (00624) (supersedes MS28741-16-0174 for future procurement)	1	FR	
-12	187-58368-5	. TAG, Hydraulic hose assembly identification (utility suction)	1	FR	
-13	AN893-16D	. BUSHING	1	FR	
	AN6290-12	. GASKET	1	FR	
-14	AN837-8D	. ELBOW	1	FR	
	AN6290-8	. GASKET	1	FR	
	AN6291-8	. RING	1	FR	
	AN6289-8D	. NUT	1	FR	
-15	AN6292-8-14-1/2	. HOSE ASSEMBLY (pressure)	1	FR	
-16	181-58269-3	. TAG, Hydraulic hose assembly identification (utility pressure)	1	FR	
-17	209-58645	HYDRAULIC EQUIPMENT ASSEMBLY, Pump engine driven variable displacement (interchangeable with 209-58652)	1	FR	
-18	AA-65502-R-S404C	. PUMP, Hydraulic variable volume (VI) (62983) (supersedes E13560 (VI) (62983) and AA-65502-R-S404 (VI) (62983)) (E13560 (VI) (62983) and AA-65502-R-S404 (VI) (62983) are interchangeable)	1	FR	
-19	AN834-4D	. TEE	1	FR	
	AN6290-4	. GASKET	1	FR	
	AN6291-4	. RING	1	FR	
	AN6289-4	. NUT	1	FR	
-20	AN833-6D	. ELBOW	1	FR	
	AN6290-6	. GASKET	1	FR	
	AN6291-6	. RING	1	FR	
	AN6289-6	. NUT	1	FR	
-21	MS28741-6-0160	. HOSE ASSEMBLY (case drain)	1	FR	
-22	187-58368-19	. TAG, Hydraulic hose assembly identification (utility case drain)	1	FR	
-23	AN837-16D	. ELBOW	1	FR	
	AN6290-16	. GASKET	1	FR	
	AN6291-16	. RING	1	FR	
	AN6289-16D	. NUT	1	FR	
-24	MS28741-16-0122	. HOSE ASSEMBLY (suction)	1	FR	
-25	187-58368-5	. TAG, Hydraulic hose assembly identification (utility suction)	1	FR	
-26	AN6292-8-18-1/2	. HOSE ASSEMBLY (pressure)	1	FR	
-27	181-58269-3	. TAG, Hydraulic hose assembly identification (utility pressure)	1	FR	
-28	150-S1-8	COUPLING HALF, Self-sealing (AQ) (00624)	1	FR	
	C155-25-8	NUT, Union (AQ) (00624)	1	FR	
-29	150-S1-6	COUPLING HALF, Self-sealing (AQ) (00624)	1	FR	
	C155-25-8	NUT, Union (AQ) (00624)	1	FR	
	AN815-6D	UNION (used on 209-58652)	1	FR	
	AN939-6D	ELBOW (used on 209-58652)	1	FR	
	AN6290-6	GASKET (used on 209-58652)	1	FR	
-30	150-S1-16	COUPLING HALF, Self-sealing (AQ) (00624)	1	FR	
	C155-25-16	NUT, Union (AQ) (00624)	1	FR	
-31	3005-S4-16D	COUPLING HALF, Self-sealing (AQ) (00624)	1	FR	
-32	3005-S4-6D	COUPLING HALF, Self-sealing (AQ) (00624)	1	FR	
-33	3005-S4-8D	COUPLING HALF, Self-sealing (AQ) (00624)	1	FR	
	ATTACHING PARTS				
	AN520-10R10	SCREW	9	FR	
	2W18-10	WASHER, Flat (NA) (89372)	18	FR	
	AN365-1032	NUT	9	FR	
	---*---				
-34	MS21902D12	UNION	1	FR	
-35	209-58620	HYDRAULIC EQUIPMENT ASSEMBLY, Valve utility system priority	1	FR	
-36	AN6280-8	. VALVE	1	FR	
-37	AN6290-8	. GASKET	4	FR	
-38	AN6291-8	. RING	2	FR	
-39	AN6289D8	. NUT	2	FR	
-40	MS21911D8	. TEE	1	FR	
-41	MS21916D8-6	. REDUCER	1	FR	
-42	26710-8	. VALVE ASSEMBLY, Hydraulic priority (HYRM) (81873) (interchangeable with A6020-8 (VNMB) (91130))	1	FR	

UTILITY SYSTEM FITTINGS AND PUMP ASSEMBLY - APPLICABLE TO AIRCRAFT CODED (FR)

FIGURE & INDEX NO.	PART NUMBER	1 2 3 4 5 6 7 NOMENCLATURE	UNITS PER ASSY.	USABLE ON CODE	S/C NO.
137-43	MS21909D8	TEE	1	FR	
-44	MS21904D8	ELBOW	1	FR	
-45	MS21905D8	TEE	1	FR	
-46	MS29196D8-6	REDUCER	5	FR	
-47	AN6290-6	GASKET	6	FR	
-48	2V6-56	VALVE ASSEMBLY, Hydraulic two-way restrictor (NA) (89372)	1	FR	
-49	AN6290-8	GASKET	7	FR	
-50	AN938D8	TEE	1	FR	
-51	MS21902D8	UNION	2	FR	
-52	AN6280-6	VALVE	2	FR	
-53	AN6291-6	RING	2	FR	
-54	AN6289-6	NUT	2	FR	
-55	MS21908D6	ELBOW	1	FR	
-56	AN937D8	CROSS	1	FR	
-57	AN6291-8	RING	1	FR	
-58	AN6289D8	NUT	1	FR	
-59	MS21908D8	ELBOW	1	FR	
-60	MS21907D6	ELBOW	1	FR	
-61	MS21910D8	TEE	1	FR	
	MS21916D8-6	REDUCER	1	FR	
	AN6290-8	GASKET	1	FR	
-62	MS21911D8	TEE	1	FR	
	MS21916D8-6	REDUCER	1	FR	
	AN6290-8	GASKET	1	FR	
-63	MS21902D8	UNION	1	FR	
-64	MS21905D8	TEE	1	FR	
-65	3005-S4-8D	COUPLING HALF, Self-sealing (AQ) (00624)	2	FR	
	ATTACHING PARTS				
	AN520-10R10	SCREW	6	FR	
	2W18-10	WASHER, Flat (NA) (89372)	12	FR	
	AN365-1032	NUT	6	FR	
	---*---				
-66	MS21902D6	UNION	1	FR	
	AN6290-6	GASKET	2	FR	
	AN939-6D	ELBOW	1	FR	
-67	AN832-6D	UNION	1	FR	
	AN924-6D	NUT	1	FR	
-68	MS21904D6	ELBOW	1	FR	
-69	MS21905D6	TEE	1	FR	
-70	MS21907D6	ELBOW	2	FR	
	2W18-916	WASHER, Flat (NA) (89372)	2	FR	
	AN924-6D	NUT	2	FR	
-71	181-58370	CAP ASSEMBLY, Hydraulic flared tube fitting	1	FR	
-72	MS21908D6	ELBOW	1	FR	
	AN6289-6	NUT	1	FR	
	AN6291-6	RING	1	FR	
	AN6290-6	GASKET	2	FR	
	AN6280-6	VALVE	1	FR	
	MS21902D6	UNION	1	FR	
-73	MS21902D6	UNION	2	FR	
-74	3055-S11-8D	COUPLING HALF, Self-sealing (AQ) (00624)	1	FR	
	ATTACHING PARTS				
	AN520-10R10	SCREW	3	FR	
	2W18-10M	WASHER, Flat (NA) (89372)	6	FR	
	AN365-1032	NUT	3	FR	
	---*---				
	MS21902D8	UNION	1	FR	
	AN6290-8	GASKET	2	FR	
	AN941D8	ELBOW	1	FR	
	AN6291-8	RING	1	FR	
	AN6289D8	NUT	1	FR	
-75	3055-S11-12D	COUPLING HALF, Self-sealing (AQ) (00624)	1	FR	
	ATTACHING PARTS				
	AN520-10R10	SCREW	3	FR	
	2W18-10M	WASHER, Flat (NA) (89372)	6	FR	
	AN365-1032	NUT	3	FR	
	---*---				
-76	209-58296-102	DRAIN ASSEMBLY, Hydraulic fluid overboard RH	1	FR	
-77	150-S1-8	COUPLING HALF, Self-sealing (AQ) (00624)	2	FR	
	C155-25-8	NUT, Union (AQ) (00624)	2	FR	
-78	MS21901D8	ADAPTER	2	FR	
	AN924-8D	NUT	2	FR	
-79	MS21908-8	ELBOW	1	FR	
	2W18-1216	WASHER, Flat (NA) (89372)	1	FR	
	AN924-8	NUT	1	FR	
-80	MS21903-8	UNION	1	FR	
	2W18-1216	WASHER, Flat (NA) (89372)	1	FR	
	AN924-8	NUT	1	FR	
-81	AN924-8	NUT	1	FR	
-82	2W18-1216	WASHER, Flat (NA) (89372)	1	FR	
-83	MS21903-8	UNION	1	FR	
-84	AN6290-8	GASKET	6	FR	
-85	AN938-8	TEE	1	FR	

UTILITY SYSTEM FITTINGS AND PUMP ASSEMBLY - APPLICABLE TO AIRCRAFT CODED (FR)

FIGURE & INDEX NO.	PART NUMBER	1 2 3 4 5 6 7 NOMENCLATURE	UNITS PER ASSY.	USABLE ON CODE	S/C NO.
137-86	MS21910-8-6	REDUCER	2	FR	
-87	AN6290-6	GASKET	2	FR	
-88	AN6280-6	VALVE	1	FR	
-89	AN6291-6	RING	1	FR	
-90	AN6289-6	NUT	1	FR	
-91	MS21908-6	ELBOW	1	FR	
-92	AN6291-8	RING	2	FR	
-93	AN6289-8	NUT	2	FR	
-94	MS21910-8	TEE	1	FR	
-95	AN6280-8	VALVE	1	FR	
-96	MS21907-8	ELBOW	1	FR	
-97	AN924-8	NUT	1	FR	
-98	2W18-1216	WASHER, Flat (NA) (89372)	1	FR	
-99	MS21911-8	TEE	1	FR	
-100	AN6290-8	GASKET	1	FR	
-101	MS21916-8-6	REDUCER	1	FR	
-102	AN6290-6	GASKET	2	FR	
-103	AN6280-6	VALVE	1	FR	
-104	MS21902-8	UNION	1	FR	
-105	MS21912-8	TEE	1	FR	
	AN924-8D	NUT	1	FR	
-106	MS21910-8	TEE	1	FR	
	AN6290-8	GASKET	1	FR	
	MS21916-8-6	REDUCER	1	FR	
	AN924-8D	NUT	1	FR	
-107	MS21902D8	UNION	1	FR	
-108	MS21904-6	ELBOW	1	FR	
-109	MS21908D8	ELBOW	1	FR	
	2W18-1216	WASHER, Flat (NA) (89372)	1	FR	
	2W1V49-32-62	WASHER, Plain (NA) (89372)	1	FR	
	AN924-8D	NUT	1	FR	
-110	MS21907D8	ELBOW	1	FR	
	2W18-1216	WASHER, Flat (NA) (89372)	1	FR	
	2W1V49-32-62	WASHER, Plain (NA) (89372)	1	FR	
	AN924-8D	NUT	1	FR	
-111	MS21907D4	ELBOW	1	FR	
	2W18-716	WASHER, Flat (NA) (89372)	1	FR	
	2W1V29-22-62	WASHER, Plain (NA) (89372)	1	FR	
	AN924-4D	NUT	1	FR	
-112	MS21902D8	UNION	4	FR	
-113	MS21916D8-6	REDUCER	2	FR	
-114	18D2	SNUBBER (OPS) (76906)	1	FR	
	AN6290-4	GASKET	2	FR	
	MS21915D6-4	BUSHING	1	FR	
	MS21902D4	UNION	1	FR	
-115	MS21908D4	ELBOW	1	FR	449
	MS21907D4	ELBOW	1	FR	
	2W18-716	WASHER, Flat (NA) (89372)	1	FR	
	AN924-4D	NUT	1	FR	
-116	MS21908D6	ELBOW	4	FR	
	2W18-916	WASHER, Flat (NA) (89372)	8	FR	
	AN924-6D	NUT	4	FR	
-117	MS21912D6	TEE	1	FR	
	2W18-916	WASHER, Flat (NA) (89372)	1	FR	
	AN924-6D	NUT	1	FR	
-118	MS21909D6	TEE	1	FR	
	2W18-916	WASHER, Flat (NA) (89372)	1	FR	
	AN924-6D	NUT	1	FR	
-119	MS21908D6	ELBOW	2	FR	
	2W18-916	WASHER, Flat (NA) (89372)	2	FR	
	AN924-6D	NUT	2	FR	

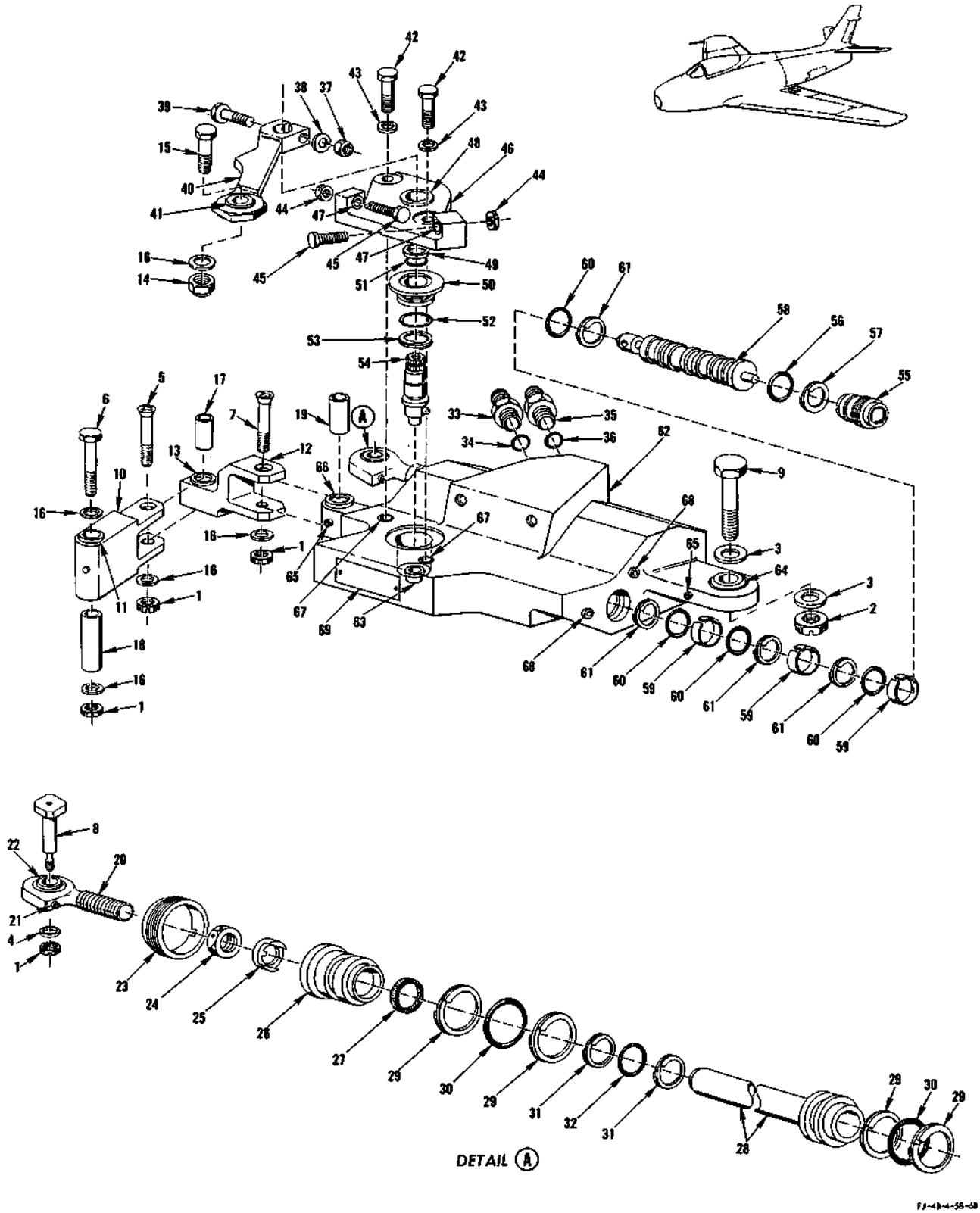

FIGURE 138 - SPOILER ACTUATOR ASSEMBLY - APPLICABLE TO AIRCRAFT CODED (FR)

LANDING GEAR UP AND UPLOCK SYSTEM

FIGURE & INDEX NO.	PART NUMBER	1 2 3 4 5 6 7 NOMENCLATURE	UNITS PER ASSY.	USABLE ON CODE	S/C NO.
142	209-58835-89	LINE ASSEMBLY, Landing gear up from union station 116.125 to union station 131	1	DJ	
-42	209-58805-73	LINE ASSEMBLY, Landing gear up from union station 74.875 to elbow station 116.125	1		
-43	MS21904D6	ELBOW	1		
-44	209-58805-7	LINE ASSEMBLY, Landing gear up from elbow station 74.875 to bulkhead elbow station 74.875	1		
-45	MS21908D6	ELBOW	1		
	2W18-916	WASHER, Flat (NA) (89372)	1		
	AN924-6D	NUT	1		
-46	209-58816-5	LINE ASSEMBLY, Landing gear up from tee station 49 to elbow station 75.25	1		
-47	MS21905-6D	TEE	1		
-48	194-58816-23	LINE ASSEMBLY, Landing gear up from tee station 49 to reducer station 52	1		
-49	MS21916D6-4	REDUCER	1		
	AN6290-4	GASKET	2		
	AN939D4	ELBOW	1		
	AN832-4D	UNION	1		
	AN924-4D	NUT	1		
-50	3H3-4-0164	HOSE ASSEMBLY, Plastic covered (uplock) (NA) (89372) (make from MS28741-4-164	1		
-51	194-58816-19	LINE ASSEMBLY, Landing gear up from restrictor station 30 to tee station 49	1		
-52	194-58645	HYDRAULIC EQUIPMENT ASSEMBLY, Valve nose landing gear restrictor	1		
	1V4-20-30	. VALVE ASSEMBLY, Hydraulic one-way restrictor (NA) (89372)	1		
	AN6290-6	. GASKET	2		
	MS21916D6-4	. REDUCER	1		
	MS21902D6	. UNION	1		
-53	209-58816-15	LINE ASSEMBLY, Landing gear up from elbow station 21 to restrictor station 25	1		
-54	MS21908D4	ELBOW	1		
	AN6290-4	GASKET	2		
	AN 6291-4	RING	1		
	AN6289-4	NUT	1		
	AN939D4	ELBOW	1		
	AN832-4D	UNION	1		
	AN924-4D	NUT	1		
-55	3H3-4-0130	HOSE ASSEMBLY, Plastic covered (NA) (89372) (gear up) (make from MS28741-4-0130)	1		

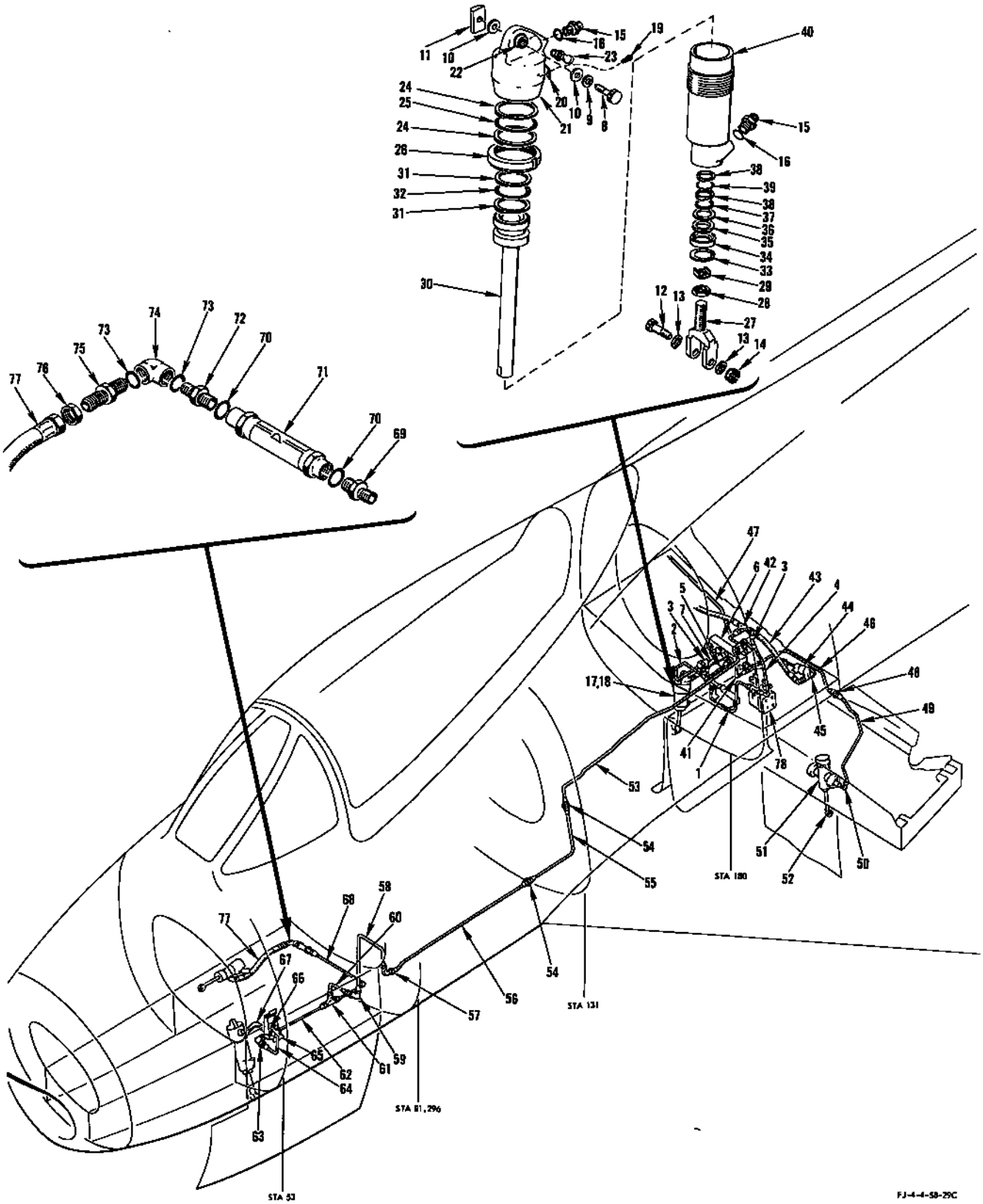

FIGURE 143 - FAIRING DOOR OPEN AND UNLOCK SYSTEM

EMERGENCY NOSE GEAR SYSTEM

FIGURE & INDEX NO.	PART NUMBER	1 2 3 4 5 6 7 NOMENCLATURE	UNITS PER ASSY.	USABLE ON CODE	S/C NO.
150	194-58608	HYDRAULIC EQUIPMENT ASSEMBLY, Valve emergency nose gear accumulator control	1	BR	357
		ATTACHING PARTS			
	AN3-22A	BOLT	2	BR	
	2W18-10M	WASHER, Flat (NA) (89372)	2	BR	
		---*---			
-1	MS21916D8-6	. REDUCER	2	BR	
-2	AN6290-8	. GASKET	2	BR	
-3	26275	. VALVE ASSEMBLY, Hydraulic (AP) (00502) (interchangeable with 14-1086 (PAET) (92003) and 11940 (MVEM)) (93724)	1	BR	
-4	AN6290-6	. GASKET	2	BR	
-5	AN6280-6	. VALVE	1	BR	
-6	MS21902D6	. UNION	1	BR	
	209-58608	HYDRAULIC EQUIPMENT ASSEMBLY, Valve emergency nose gear accumulator control	1	BS	
		ATTACHING PARTS			
	AN3-22A	BOLT	2	BS	
	2W18-10M	WASHER, Flat (NA) (89372)	2	BS	
		---*---			
-7	MS21916D8-6	. REDUCER	2	BS	
-8	AN6290-8	. GASKET	4	BS	
-9	26275	. VALVE ASSEMBLY, Hydraulic (AP) (00502) (interchangeable with 14-1086 (PAET) (92003) and 11940 (MVEM)) (93724)	1	BS	
-10	MS21903D8	. UNION	1	BS	
-11	AN6289D8	. NUT	1	BS	
-12	AN6291-8	. RING	1	BS	
-13	AN939D8	. ELBOW	1	BS	
-14	AN6290-6	. GASKET	2	BS	
-15	AN6280-6	. VALVE	1	BS	
-16	MS21902D6	. UNION	1	BS	
-17	194-58805-89	LINE ASSEMBLY, Emergency nose gear pressure from check valve station 27 to tee station 36	1	BR	357
	209-58835-40	LINE ASSEMBLY, Emergency nose gear pressure from check valve station 27 to tee station 36	1	BS	
-18	194-58699	HYDRAULIC EQUIPMENT ASSEMBLY, Accumulator emergency nose gear (see figure 152 for breakdown)	1		
		ATTACHING PARTS			
	325-63-415SH	CLAMP (MAR) (98625)	2		
	AN4-12A	BOLT	3		
	2W18-416M	WASHER, Flat (NA) (89372)	6		
	AN365-428	NUT	3		
		---*---			
-19	194-58805-49	LINE ASSEMBLY, Emergency nose gear pressure from tee station 43 to dump valve	1	BR	
-20	194-58805-95	LINE ASSEMBLY, Emergency pressure from tee station 45 to elbow in thermal relief valve	1		
-21	MS21908D4	ELBOW	1		
	AN6289-4	NUT	1		
	AN6290-4	GASKET	1		
	AN6291-4	RING	1		
-22	AN6245B4	VALVE	1		
-23	194-58836-59	LINE ASSEMBLY, Accumulator air pressure from tee on air gauge to elbow station 52.5	1		
-24	194-58686	HYDRAULIC EQUIPMENT ASSEMBLY, Panel emergency nose gear accumulator recharge (see figure 152 for breakdown)	1		
		ATTACHING PARTS			
	AN520-10R8	SCREW	3		
	AN520-10R7	SCREW	3		
	2W18-10M	WASHER, Flat (NA) (89372)	6		
	AN365-1032	NUT	3		
		---*---			
-25	209-58805-51	LINE ASSEMBLY, Emergency nose gear pressure from elbow station 42 to elbow in emergency nose gear selector valve	1		
-26	209-58622-10	HYDRAULIC EQUIPMENT ASSEMBLY, Valve emergency nose gear selector	1	LG	368
	209-58622	HYDRAULIC EQUIPMENT ASSEMBLY, Valve emergency nose gear selector (see figure 151 for complete breakdown)	1	LF	368
		ATTACHING PARTS			
	AN3-10A	BOLT	2	LG	368
	2W18-10M	WASHER, Flat (NA) (89372)	4	LG	368
	AN365-1032	NUT	2	LG	368
	AN3-3A	BOLT	6	LG	368
	2W18-10M	WASHER, Flat (NA) (89372)	6	LG	368
		---*---			
-27	MS21908D6	ELBOW	2	LG	368
	AN6289-6	NUT	2	LG	368
	AN6291-6	RING	2	LG	368
	AN6290-6	GASKET	2	LG	368
-28	MS21902D6	UNION	1	LG	368
	AN6290-6	GASKET	1	LG	368
-29	209-58805-13	LINE ASSEMBLY, Emergency nose gear down from union station 33.625 to union station 32	1	BJ	366
	209-58835-31	LINE ASSEMBLY, Emergency nose gear down from union station 33.625 to union station 42	1	BK	

EMERGENCY NOSE GEAR SYSTEM

FIGURE & INDEX NO.	PART NUMBER	1 2 3 4 5 6 7 NOMENCLATURE	UNITS PER ASSY.	USABLE ON CODE	S/C NO.
150-30	MS21902D6	UNION	1	BK	
-31	AN6290-6	GASKET	2	BK	
-32	AN6280-6	VALVE	1	BK	
-33	AN6291-6	RING	1	BK	
-34	AN6289-6	NUT	1	BK	
-35	MS21912D6	TEE	1	BK	
-36	209-58805-53	LINE ASSEMBLY, Emergency nose gear pressure from elbow in selector valve to union station 31	1	Y	
	209-58805-77	LINE ASSEMBLY, Emergency nose gear pressure from elbow in selector valve to union station 31	1	Z	
-37	MS21907D6	ELBOW	1		
	2W18-916	WASHER, Flat (NA) (89372)	1		
	AN924-6D	NUT	1		
-38	194-58816-9	LINE ASSEMBLY, Emergency nose gear down from elbow station 30.25 to reducer at station 21	1		
-39	MS21916D6-4	REDUCER	1		
-40	AN6290-4	GASKET	2		
-41	AN939D4	ELBOW	1		
-42	AN832-4D	UNION	1		
-43	AN924-4D	NUT	1		
-44	3H3-4-0130	HOSE ASSEMBLY, Plastic covered (NA) (89372) (gear down) (make from MS28741-4-0130)	1		
-45	209-58835-9	LINE ASSEMBLY, Utility system pressure from union in selector valve station 23 to tee in bulkhead station 53 (see figure 135)	1		

EMERGENCY NOSE LANDING GEAR DOWN ACCUMULATOR AND ACCUMULATOR RECHARGE PANEL ASSEMBLY

FIGURE & INDEX NO.	PART NUMBER	1 2 3 4 5 6 7 NOMENCLATURE	UNITS PER ASSY.	USABLE ON CODE
152	194-58699	HYDRAULIC EQUIPMENT ASSEMBLY, Accumulator emergency system auxiliary gear down	1	
-1	MS21908D4	. ELBOW	1	
-2	AN6289-4	. NUT	3	
-3	AN6291-4	. RING	3	
-4	AN6290-4	. GASKET	6	
-5	S-513-50-3	. ACCUMULATOR ASSEMBLY (SPES)	1	
-6	AN6290-8	. GASKET	1	
-7	AN893-12D	. BUSHING	1	
-8	AN6290-6	. GASKET	7	
-9	AN6291-6	. RING	3	
-10	AN6289-6	. NUT	3	
-11	MS21903D6	. UNION	2	
-12	AN939D6	. ELBOW	1	
-13	MS21902D6	. UNION	1	
-14	AN938D6	. TEE	1	
-15	MS21916D6-4	. REDUCER	1	
-16	1V7-20-30	. VALVE ASSEMBLY, Hydraulic two-way restrictor (NA)	1	
-17	MS21903D4	. UNION	1	
-18	MS21908D6	. ELBOW	1	
-19	AN894D6-4	. BUSHING	1	
-20	AN938D4	. TEE	1	
-21	MS21912D4	. TEE	1	
-22	194-58836-59	LINE ASSEMBLY, Accumulator air pressure from tee on air gauge to elbow fuselage station 52.5	1	
	194-58686	HYDRAULIC EQUIPMENT ASSEMBLY, Panel emergency nose gear accumulator recharge	1	
-23	MS21908D4	. ELBOW	1	
-24	AN6289-4	. NUT	2	
-25	AN6291-4	. RING	2	
-26	AN6290-4	. GASKET	5	
-27	MS21902D4	. UNION	2	
-28	104465	. VALVE, Hydraulic main two-way shutoff (WKG) (27600 (HYRM) may be used) (10-1006 (PAET) inactive for future procurement)	1	
-29	AN365-1032	. NUT	2	
-30	AN960D10	. WASHER	2	
-31	AN520-10R5	. SCREW	2	
-32	AN6287-1	. VALVE	1	
-33	187-58334	. ADAPTER, Hydraulic accumulator air valve	1	
-34	AN924-10D	. NUT	1	
-35	AN927-4D	. ELBOW	1	
-36	194-58805-51	. LINE ASSEMBLY, Accumulator air pressure filler valve to tee on pressure gauge	1	
-37	MS21912D4	. TEE	1	
-38	AN5771-7A	. GAGE (interchangeable with AN5771-7B)	1	
-39	A6939-632-.375	. NUT, Speed (TIN)	4	
-40	AN515-6R12	. SCREW	4	
-41	181-58254	. PANEL ASSEMBLY, Hydraulic emergency auxiliary alighting gear accumulator recharge complete	1	

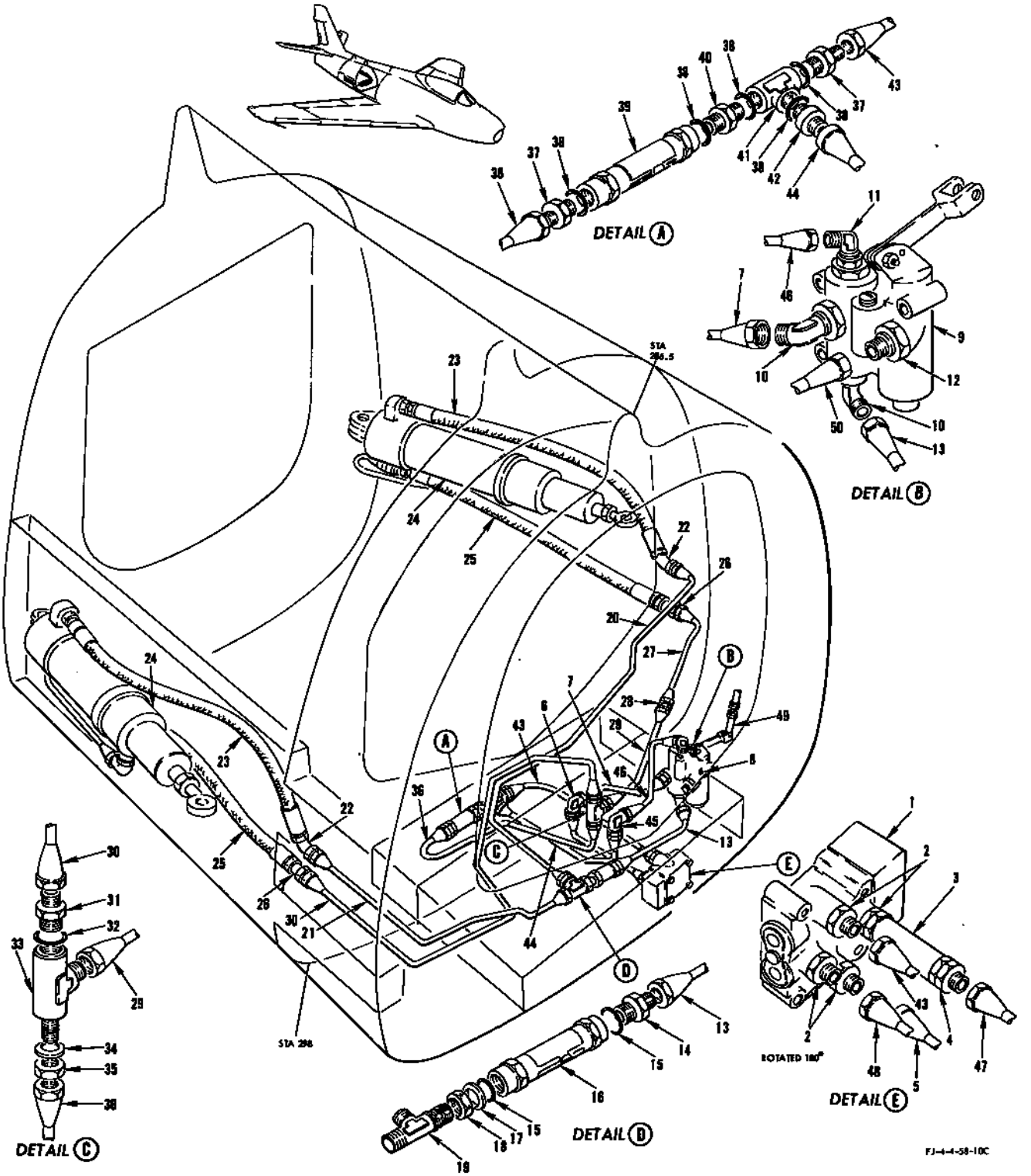

FIGURE 153 - SPEED BRAKE SYSTEM - APPLICABLE TO AIRCRAFT CODED (ET)

SPEED BRAKE SYSTEM - APPLICABLE TO AIRCRAFT CODED (ET)

FIGURE & INDEX NO.	PART NUMBER	1 2 3 4 5 6 7 NOMENCLATURE	UNITS PER ASSY.	USABLE ON CODE	S/C NO.
153	209-58606	HYDRAULIC EQUIPMENT ASSEMBLY, Valve speed brake selector	1	ET	
		ATTACHING PARTS			
	AN3-22A	BOLT	2	ET	
	AN3-16A	BOLT	2	ET	
	2W18-10L	WASHER, Flat (NA) (89372)	4	ET	
		---*---			
-1	11070	. VALVE ASSEMBLY, Solenois selector (MVEM) (93724) (interchangeable with 12000 (BTP) (82106))	1	ET	
-2	MS21916D8-6	. REDUCER	4	ET	
	AN6290-6	. GASKET	4	ET	
-3	AN6280-8	. VALVE	1	ET	
	AN6290-8	. GASKET	2	ET	
-4	MS21902D8	. UNION	1	ET	
-5	209-58810-23	LINE ASSEMBLY, Speed brake open from reducer in speed brake valve to elbow - in shear web	1	ET	
-6	MS21908-8	ELBOW	1	ET	
	2W18-1216	WASHER, Flat (NA) (89372)	1	ET	
	AN924-8D	NUT	1	ET	
-7	209-58810-29	LINE ASSEMBLY, Speed brake open from elbow in shear web to lock valve	1	ET	
-8	AN3-15A	BOLT	3	ET	
	2W18-10L	WASHER, Flat (NA) (89372)	3	ET	
	209-58610	HYDRAULIC EQUIPMENT ASSEMBLY, Valve speed brake lock	1	ET	
-9	27700	. VALVE, Hydraulic (HYRM) (81873)	1	ET	
-10	MS21908-8	. ELBOW	2	ET	
	AN6290-8	. GASKET	2	ET	
	AN6291-8	. RING	2	ET	
	AN6289D8	. NUT	2	ET	
-11	MS21908-4	. ELBOW	1	ET	
	AN6290-4	. GASKET	1	ET	
	AN6291-4	. RING	1	ET	
	AN6289-4	. NUT	1	ET	
-12	MS21902-8	. UNION	1	ET	
	AN6290-8	. GASKET	1	ET	
-13	209-58810-25	LINE ASSEMBLY, Speed brake open from speed brake lock valve to reducer station 286.5	1	ET	
-14	MS21916-8-6	REDUCER	1	ET	
-15	AN6290-6	GASKET	2	ET	
-16	1V4-44-30	VALVE ASSEMBLY, Hydraulic one way restrictor (NA) (89372)	1	ET	
-17	AN6291-6	RING	1	ET	
-18	AN6289-6	NUT	1	ET	
-19	MS21912-6	TEE	1	ET	
-20	209-58810-31	LINE ASSEMBLY, Speed brake open LH from tee to elbow station 298 LH	1	ET	
-21	209-58810-35	LINE ASSEMBLY, Speed brake open RH from tee to elbow station 298 RH	1	ET	
-22	MS21907-6	ELBOW	2	ET	
	AN924-6	NUT	2	ET	
-23	MS28751-6-0240	HOSE ASSEMBLY (open)	2	ET	
-24	181-58633	HYDRAULIC EQUIPMENT ASSEMBLY, Cylinder speed brake actuating (see figure 156 for complete breakdown)	1	ET	
-25	MS28751-6-0250	HOSE ASSEMBLY (close)	2	ET	
-26	MS21903-6	UNION	2	ET	
	AN924-6	NUT	2	ET	
-27	209-58810-45	LINE ASSEMBLY, Speed brake close LH from union station 298 LH to reducer	1	ET	
-28	MS21916-8-6	REDUCER	1	ET	
-29	209-58810-43	LINE ASSEMBLY, Speed brake close LH from reducer to tee in shear web	1	ET	
-30	209-58810-49	LINE ASSEMBLY, Speed brake close RH from union station 298 RH to reducer	1	ET	
-31	MS21916-8-6	REDUCER	1	ET	
-32	AN6290-8	GASKET	1	ET	
-33	MS21911-8	TEE	1	ET	
-34	2W18-1216	WASHER, Flat (NA) (89372)	1	ET	
-35	AN924-8D	NUT	1	ET	
-36	209-58810-41	LINE ASSEMBLY, Speed brake close from tee in shear web to reducer	1	ET	
-37	MS21916D8-6	REDUCER	2	ET	
-38	AN6290-6	GASKET	5	ET	
-39	1V4-20-30	VALVE ASSEMBLY, Hydraulic one-way restrictor (NA) (89372)	1	ET	
-40	MS21902-16	UNION	1	ET	
-41	AN938D6	TEE	1	ET	
-42	MS21916D6-4	REDUCER	1	ET	
-43	209-58810-37	LINE ASSEMBLY, Speed brake close from reducer in tee to reducer in speed brake valve	1	ET	
-44	209-58810-73	LINE ASSEMBLY, Speed brake unlock from reducer in tee to elbow in shear web	1	ET	
-45	MS21908-4	ELBOW	1	ET	
	2W18-716	WASHER, Flat (NA) (89372)	1	ET	
	AN924-4D	NUT	1	ET	
-46	209-58810-75	LINE ASSEMBLY, Speed brake unlock from elbow in shear web to lock valve	1	ET	
-47	209-58810-9	LINE ASSEMBLY, Utility system pressure from tee in shear web to reducer in speed brake selector valve (see figure 135)	1	ET	
-48	209-58810-85	LINE ASSEMBLY, Utility system return from union station 298 LH side to speed brake selector valve (see figure 135)	1	ET	
-49	209-52732	ROD ASSEMBLY, Speed brake dump system control valve actuating (see Surface and Secondary Controls)	1	ET	
-50	209-58810-83	LINE ASSEMBLY, Utility system return from tee in shear web to lock valve (see figure 135)	1	ET	

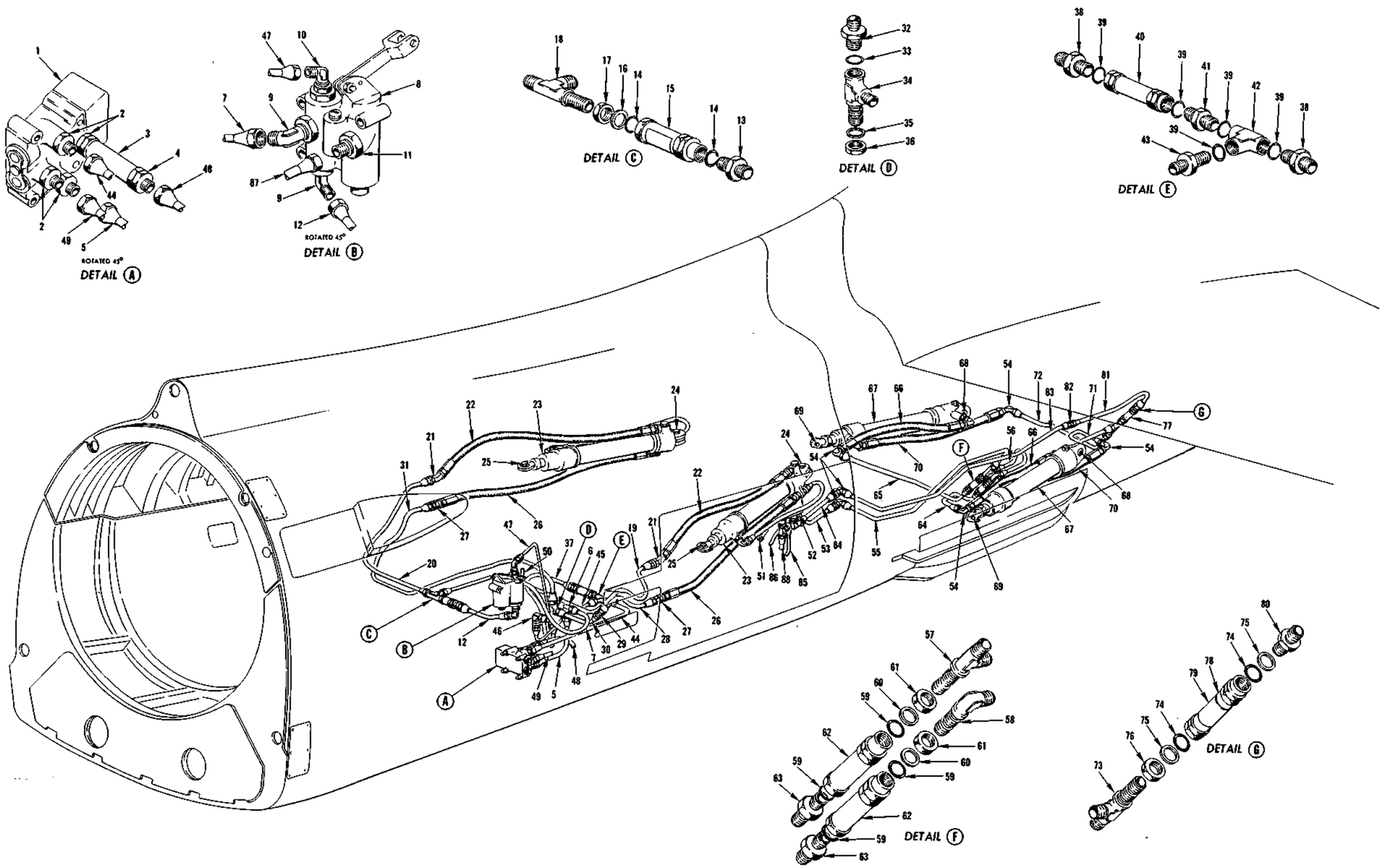

FIGURE 154 - SPEED BRAKE SYSTEM - APPLICABLE TO AIRCRAFT CODED (FR)

SPEED BRAKE SYSTEM - APPLICABLE TO AIRCRAFT CODED (FR)

FIGURE & INDEX NO.	PART NUMBER	1 2 3 4 5 6 7 NOMENCLATURE	UNITS PER ASSY.	USABLE ON CODE	S/C NO.
154	209-58606	VALVE ASSEMBLY, Hydraulic equipment speed brake selector	1	FR	
	ATTACHING PARTS				
	AN3-22A	BOLT	2	FR	
	AN3-16A	BOLT	2	FR	
	2W18-10M	WASHER, Flat (NA) (89372)	4	FR	
	---*---				
-1	11070	. VALVE ASSEMBLY, Solenoid selector (MVEM) (93724) (interchangeable with 12000 (BTP) (82106))	1	FR	
-2	MS21916D8-6	. REDUCER	4	FR	
	AN6290-6	. GASKET	4	FR	
-3	AN6280-8	. VALVE	1	FR	
	AN6290-8	. GASKET	2	FR	
-4	MS21902D8	. UNION	1	FR	
-5	209-58822-67	LINE ASSEMBLY, Speed brake open from reducer in speed brake valve to elbow - in shear web	1	FR	
-6	MS21908-8	ELBOW	1	FR	
	2W18-1216	WASHER, Flat (NA) (89372)	1	FR	
	AN924-8D	NUT	1	FR	
-7	209-58810-29	LINE ASSEMBLY, Speed brake open from elbow in shear web to lock valve	1	FR	
	209-58610	HYDRAULIC EQUIPMENT ASSEMBLY, Valve speed brake lock	1	FR	
	ATTACHING PARTS				
	AN3-15A	BOLT	3	FR	
	2W18-10M	WASHER, Flat (NA) (89372)	3	FR	
	---*---				
-8	27700	. VALVE, Hydraulic (HYRM) (81873)	1	FR	
-9	MS21908-8	. ELBOW	2	FR	
	AN6290-8	. GASKET	2	FR	
	AN6291-8	. RING	2	FR	
	AN6289D8	. NUT	2	FR	
-10	MS21908-4	. ELBOW	1	FR	
	AN6290-4	. GASKET	1	FR	
	AN2691-4	. RING	1	FR	
	AN6289-4	. NUT	1	FR	
-11	MS21902-8	. UNION	1	FR	
	AN6290-8	. GASKET	1	FR	
-12	209-58822-21	LINE ASSEMBLY, Speed brake open from speed brake lock valve to restrictor station 286.5	1	FR	
-13	MS21916-8-6	REDUCER	1	FR	
-14	AN6290-6	GASKET	2	FR	
-15	2V6-56	VALVE ASSEMBLY, Hydraulic two-way restrictor (NA) (89372)	1	FR	
-16	AN6291-6	RING	1	FR	
-17	AN6289-6	NUT	1	FR	
-18	MS21912-6	TEE	1	FR	
-19	209-58810-31	LINE ASSEMBLY, Speed brake open LH from tee to elbow station 298 LH	1	FR	
-20	209-58810-35	LINE ASSEMBLY, Speed brake open RH from tee to elbow station 298 RH	1	FR	
-21	MS21907-6	ELBOW	2	FR	
	AN924-6	NUT	2	FR	
-22	MS28751-6-0240	HOSE ASSEMBLY (forward speed brake open)	2	FR	
-23	181-58633	HYDRAULIC EQUIPMENT ASSEMBLY, Cylinder speed brake actuating (see figure 156 for complete breakdown)	2	FR	
-24	AN179-21	BOLT	2	FR	
	2W18-916	WASHER, Flat (NA) (89372)	4	FR	
	AN310-9	NUT	2	FR	
-25	NAS464-9-15	BOLT	2	FR	
	2W18-916	WASHER, Flat (NA) (89372)	2	FR	
	AN320-9	NUT	2	FR	
-26	MS28751-6-0250	HOSE ASSEMBLY (forward speed brake close)	2	FR	
-27	MS21903-6	UNION	2	FR	
	AN924-6	NUT	2	FR	
-28	209-58810-45	LINE ASSEMBLY, Speed brake close LH from union station 298 LH to reducer	1	FR	
-29	MS21916-8-6	REDUCER	1	FR	
-30	209-58810-43	LINE ASSEMBLY, Speed brake close LH from reducer to tee in shear web	1	FR	
-31	209-58810-49	LINE ASSEMBLY, Speed brake close RH from union station 298 RH to reducer	1	FR	
-32	MS21916-8-6	REDUCER	1	FR	
-33	AN6290-8	GASKET	1	FR	
-34	MS21911-8	TEE	1	FR	
-35	2W18-1216	WASHER, Flat (NA) (89372)	1	FR	
-36	AN924-8D	NUT	1	FR	
-37	209-58822-23	LINE ASSEMBLY, Speed brake close restrictor to tee in shear web	1	FR	
-38	MS21916D8-6	REDUCER	2	FR	
-39	AN6290-6	GASKET	5	FR	
-40	2V12-32	VALVE ASSEMBLY, Hydraulic one-way restrictor (NA) (89372)	1	FR	
-41	MS21902D6	UNION	1	FR	
-42	AN938D6	TEE	1	FR	
-43	MS21916D6-4	REDUCER	1	FR	
-44	209-58822-25	LINE ASSEMBLY, Speed brake close from reducer in speed brake valve to tee	1	FR	
-45	209-58822-19	LINE ASSEMBLY, Speed brake unlock from reducer in tee to elbow in shear web	1	FR	
-46	MS21908-4	ELBOW	1	FR	
	2W18-716	WASHER, Flat (NA) (89372)	1	FR	
	AN924-4D	NUT	1	FR	
-47	209-58810-75	LINE ASSEMBLY, Speed brake unlock from elbow in shear web to lock valve	1	FR	
-48	209-58810-9	LINE ASSEMBLY, Utility system pressure from tee in shear web to reducer in speed brake selector valve (see figure 134 for continuation)	1	FR	

SPEED BRAKE SYSTEM - APPLICABLE TO AIRCRAFT CODED (FR)

FIGURE & INDEX NO.	PART NUMBER	1 2 3 4 5 6 7 NOMENCLATURE	UNITS PER ASSY.	USABLE ON CODE	S/C NO.
154-49	209-58810-85	LINE ASSEMBLY, Utility system return from union station 298 LH side to speed brake selector valve (see figure 134 for continuation)	1	FR	
-50	209-52732	ROD ASSEMBLY, Speed brake dump system control valve actuating (see Surface and Secondary Controls)	1	FR	
-51	209-52743-51	ROD ASSEMBLY, Aft fuselage speed brake dump system control valve actuating (see Surface and Secondary Controls)	1	FR	
-52	209-587157	VALVE ASSEMBLY, Hydraulic flight control aft speed brake servo (see figure 155 for breakdown)	1	FR	
-53	209-58822-31	LINE ASSEMBLY, Speed brake open from servo valve to elbow station 331.5	1	FR	
-54	MS21908-6	ELBOW	6	FR	
	2W18-916	WASHER, Flat (NA) (89372)	6	FR	
	AN924-6	NUT	6	FR	
-55	209-58820-57	LINE ASSEMBLY, Speed brake open from bulkhead elbow station 131.5 LH to tee-in restrictor station 358 LH	1	FR	
-56	209-58820-59	LINE ASSEMBLY, Speed brake open from tee in restrictor station 358 LH to restrictor station 380 LH	1	FR	
-57	MS21912-6	TEE	1	FR	
-58	MS21908-6	ELBOW	1	FR	
-59	AN6290-6	GASKET	4	FR	
-60	AN6291-6	RING	2	FR	
-61	AN6289-6	NUT	2	FR	
-62	2V6-40	VALVE ASSEMBLY, Hydraulic two-way restrictor (NA) (89372)	2	FR	
-63	MS21902-6	UNION	2	FR	
-64	209-58820-61	LINE ASSEMBLY, Speed brake open from restrictor station 360 LH to bulkhead elbow station 357.78 LH	1	FR	
-65	209-58820-63	LINE ASSEMBLY, Speed brake open from restrictor station 358 LH to bulkhead elbow station 357.78 LH	1	FR	
-66	MS28751-6-0184	HOSE ASSEMBLY (speed brake open)	2	FR	
	209-58627-1	HYDRAULIC EQUIPMENT ASSEMBLY, Cylinder aft speed brake actuating LH	1	FR	
	209-58627-2	HYDRAULIC EQUIPMENT ASSEMBLY, Cylinder aft speed brake actuating RH	1	FR	
-67	209-58027	. CYLINDER ASSEMBLY, Hydraulic aft speed brake actuating (see figure 157 for complete breakdown)	1	FR	
	MS21908-6	. ELBOW	2	FR	
	AN6290-6	. GASKET	2	FR	
	AN6291-6	. RING	2	FR	
	AN6289-6	. NUT	2	FR	
-68	NAS464P10-20	BOLT	2	FR	
	2W18-1016	WASHER, Flat (NA) (89372)	2	FR	
	2W18-1016M	WASHER, Flat (NA) (89372)	2	FR	
	AN320-10	NUT	2	FR	
-69	NAS464P10-18	BOLT	2	FR	
	2W18-1016	WASHER, Flat (NA) (89372)	6	FR	
	2W18-1016M	WASHER, Flat (NA) (89372)	2	FR	
	AN320-10	NUT	2	FR	
-70	MS28751-6-0200	HOSE ASSEMBLY (speed brake close)	2	FR	
-71	209-58820-53	LINE ASSEMBLY, Speed brake close from tee in restrictor station 383 LH to bulkhead elbow station 382.906 LH	1	FR	
-72	209-58820-55	LINE ASSEMBLY, Speed brake close from tee in restrictor station 383 LH to bulkhead elbow station 383.905 RH	1	FR	
-73	MS21912-6	TEE	1	FR	
-74	AN6290-6	GASKET	2	FR	
-75	AN6291-6	RING	2	FR	
-76	AN6289-6	NUT	2	FR	
-77	2V12-56	VALVE ASSEMBLY, Hydraulic one way restrictor (NA) (89372) (superseded by 244-58628 for future procurement)	1	FR	
	244-58628	VALVE ASSEMBLY, Hydraulic aft speed brake restrictor (supersedes 2V12-56 (NA) (89372) for future procurement)	1	FR	
-78	2V12-56	. VALVE, Aft speed brake restrictor (NA) (89372)	1	FR	
-79	5P53	. PLATE, Identification (NA) (89372)	1	FR	
-80	MS21902-6	UNION	1	FR	
-81	209-58820-73	LINE ASSEMBLY, Speed brake close from union station 358.5 to union in restrictor at station 376.375	1	FR	
-82	MS21902-6	UNION	1	FR	
-83	209-58820-51	LINE ASSEMBLY, Speed brake close from bulkhead elbow station 331.5 LH to restrictor station 383 LH	1	FR	
-84	209-58822-27	LINE ASSEMBLY, Speed brake open from servo valve to elbow station 331.5 (used only on aircraft not having 209-89852-10 package installed)	1	FR	
	209-58846-29	LINE ASSEMBLY, Speed brake open from servo valve to elbow station 331.5 (used only on aircraft having 209-89852-10 package installed)	1	FR	
-85	209-58822-25	LINE ASSEMBLY, Utility system pressure from tee in valve assembly to union in servo valve (see figure 134 for continuation) (used only on aircraft not having 209-89852-10 package installed)	1	FR	
	209-58822-27	LINE ASSEMBLY, Utility system pressure from tee in valve assembly to union in servo valve (used only on aircraft having 209-89852-10 package installed)	1	FR	
-86	209-58822-45	LINE ASSEMBLY, Utility system pressure from tee in valve assembly station 301 to union in servo valve (see figure 134 for continuation)	1	FR	
-87	209-58810-83	LINE ASSEMBLY, Utility system return from tee in shear web to lock valve (see figure 134 for continuation)	1	FR	
-88	209-58822-29	LINE ASSEMBLY, Speed brake open from relief valve station 306.37 to servo valve (see figure 134 for continuation)	1	FR	

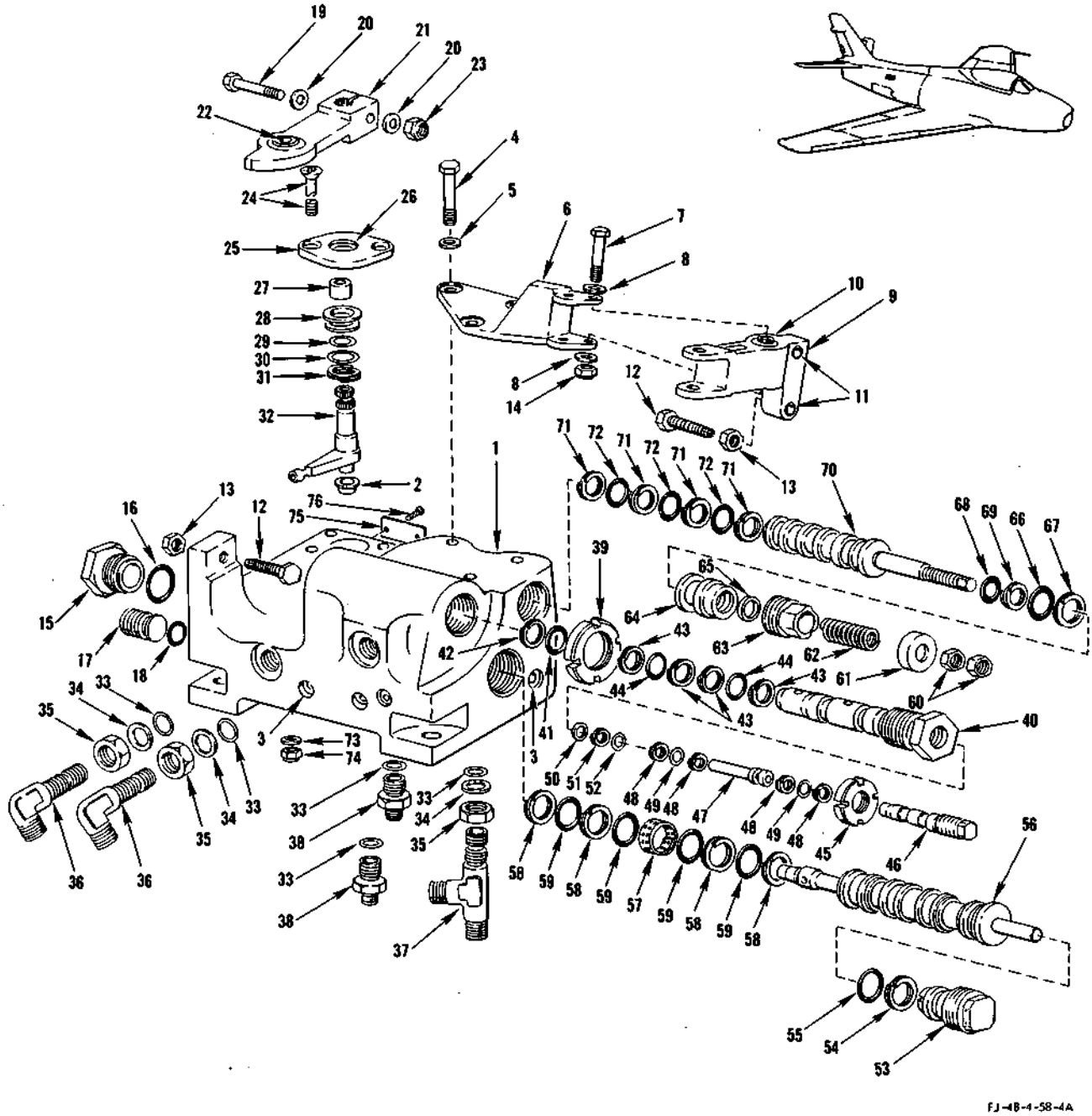

FIGURE 155 - AFT SPEED BRAKE SERVO VALVE - APPLICABLE TO AIRCRAFT CODED (FR)

FIGURE & INDEX NO.	PART NUMBER	1 2 3 4 5 6 7 NOMENCLATURE	UNITS PER ASSY.	USABLE ON CODE	S/C NO.
155	209-587157	VALVE ASSEMBLY, Hydraulic flight control aft speed brake servo (see figure 154 for next assembly)	1	FR	
	ATTACHING PARTS				
	AN4-34A	BOLT	1	FR	
	AN4-23A	BOLT	1	FR	
	AN4-10A	BOLT	2	FR	
	2W18-416	WASHER, Flat (NA) (89372)	4	FR	
	2W18-416M	WASHER, Flat (NA) (89372)	4	FR	
	AN365-428	NUT	4	FR	
	---*---				
-1	209-587168-11	. BODY ASSEMBLY, Hydraulic flight control aft speed brake servo valve	1	FR	
-2	209-587166	. . BUSHING, Hydraulic flight control valve lever support	1	FR	
	RL28SB-8	. . RING (ROSN) (83324)	3	FR	

AFT SPEED BRAKE SERVO VALVE - APPLICABLE TO AIRCRAFT CODED (FR)

FIGURE & INDEX NO.	PART NUMBER	1	2	3	4	5	6	7	NOMENCLATURE	UNITS PER ASSY.	USABLE ON CODE	S/C NO.
155	RD2065B-6.5L	.	.						INSERT (ROSN) (83324)	3	FR	
-3	1P8	.							PLUG, Tinned pipe (NA) (89372)	5	FR	
-4	AN174H6A	.							BOLT	2	FR	
-5	2W18-416	.							WASHER, Flat (NA) (89372)	2	FR	
-6	209-587180	.							BRACKET ASSEMBLY, Hydraulic flight control aft speed brake dump valve-- lever	1	FR	
	1P7	.	.						PLUG, Control stop (NA) (89372)	1	FR	
-7	NAS464-4A19	.							BOLT	1	FR	
-8	2W18-416M	.							WASHER, Flat (NA) (89372)	2	FR	
-9	209-587178-11	.							LEVER ASSEMBLY, Hydraulic flight control aft speed brake dump valve	1	FR	
-10	AN201KP4A	.	.						BEARING	2	FR	
	4S6-4-0.313	.	.						SPACER, Plain dual bearing (NA) (89372)	1	FR	
-11	RL28SB-8	.	.						RING (ROSN) (83324)	2	FR	
	RD2065B-6.5L	.	.						INSERT (ROSN) (83324)	2	FR	
-12	NAS428KH4-10	.							BOLT	3	FR	
-13	1N7-4A	.							NUT, Check (NA) (89372)	3	FR	
-14	AN364-428	.							NUT	1	FR	
-15	209-58794	.							CAP, Hydraulic flight control stabilizer actuator bias spring	1	FR	
-16	AN6290-12	.							GASKET	1	FR	
-17	HP209	.							PLUG (HYDP) (84685)	1	FR	
-18	AN6227-7	.							PACKING	1	FR	
-19	AN174-13A	.							BOLT	1	FR	
-20	2W18-416	.							WASHER, Flat (NA) (89372)	2	FR	
-21	209-587169	.							LEVER ASSEMBLY, Hydraulic flight control aft speed brake servo valve	1	FR	
-22	AN200KS4	.	.						BEARING	1	FR	
-23	AN365-428	.							NUT	1	FR	
-24	NAS334CPA21	.							BOLT	2	FR	
-25	209-58724	.							CAGE ASSEMBLY, Hydraulic aileron flight control valve	1	FR	
-26	AN201KP8A	.	.						BEARING	1	FR	
-27	4B21M-S8-004	.							BUSHING, Spacer (NA) (89372)	1	FR	
	4B21M-S8-005	.							BUSHING, Spacer (NA) (89372)	1	FR	
-28	209-58725	.							SEAL, Hydraulic aileron flight control valve shaft	1	FR	
-29	AN6227-12	.							PACKING	1	FR	
-30	AN6227-18	.							PACKING	1	FR	
-31	MS28782-18	.							RING	1	FR	
-32	209-53726-3	.							SHAFT, Hydraulic flight control aileron valve	1	FR	
-33	AN6290-6	.							PACKING	5	FR	
-34	AN6291-6	.							RING	3	FR	
-35	AN6289-6	.							NUT	3	FR	
-36	MS21908D6	.							ELBOW	2	FR	
-37	MS21912D6	.							TEE	1	FR	
-38	MS21902D6	.							UNION	2	FR	
-39	209-587179-3	.							NUT, Hydraulic flight control aft speed brake servo valve lock	1	FR	
-40	209-587171	.							SLEEVE, Hydraulic flight control aft speed brake servo valve	1	FR	
-41	AN6227-13	.							PACKING	1	FR	
-42	MS28782-13	.							RING	1	FR	
-43	MS28782-11	.							RING	4	FR	
-44	AN6227-11	.							PACKING	2	FR	
-45	209-587179-5	.							NUT, Hydraulic flight control aft speed brake servo valve lock	1	FR	
-46	209-587172	.							SCREW, Hydraulic flight control aft speed brake servo valve ram adjusting	1	FR	
-47	209-587170	.							RAM, Hydraulic flight control aft speed brake servo valve	1	FR	
-48	MS28782-6	.							RING	4	FR	
-49	AN6227-6	.							PACKING	2	FR	
-50	2W12-5	.							WASHER, Felt (NA) (89372)	1	FR	
-51	MS28782-5	.							RING	1	FR	
-52	AN6227-5	.							PACKING	1	FR	
-53	209-58733	.							CAP, Hydraulic aileron flight control valve	1	FR	
-54	MS28782-16	.							RING	1	FR	
-55	AN6227-16	.							PACKING	1	FR	
-56	209-587137-3	.							SLEEVE ASSEMBLY, Hydraulic flight control valve (stocked as an assembly)	1	FR	
	209-587137-53	.	.						SLEEVE, Hydraulic flight control valve	1	FR	
	209-587137-103	.	.						SPOOL, Hydraulic flight control valve	1	FR	
-57	163-587111	.	.						FILTER, Hydraulic flight control valve	1	FR	
-58	MS28782-14	.							RING	4	FR	
-59	AN6227-14	.							PACKING	4	FR	
-60	1N7-4A	.							NUT, Check (NA) (89372)	2	FR	
-61	209-587177	.							SEAT, Hydraulic flight control aft speed brake dump valve	1	FR	
-62	209-587176	.							SPRING Compression	1	FR	
-63	209-587175	.							RETAINER, Hydraulic flight control aft speed brake dump valve	1	FR	
-64	209-587174	.							SEAL, Hydraulic flight control aft speed brake dump valve	1	FR	
-65	2W12-6	.							WASHER, Felt (NA) (89372)	1	FR	
-66	AN6227-13	.							PACKING	1	FR	
-67	MS28782-13	.							RING	1	FR	
-68	AN6227-6	.							PACKING	1	FR	
-69	MS28782-6	.							RING	1	FR	
-70	209-587173	.							SLEEVE ASSEMBLY, Hydraulic flight control aft speed brake dump valve	1	FR	
-71	MS28782-10	.							RING	4	FR	
-72	AN6227-10	.							PACKING	4	FR	
-73	2W18-416M	.							WASHER, Flat (NA) (89372)	2	FR	
-74	AN364-428	.							NUT	2	FR	
-75	5P29	.							PLATE, Hydraulic name (NA) (89372)	1	FR	
-76	AN535-00-2	.							SCREW	2	FR	

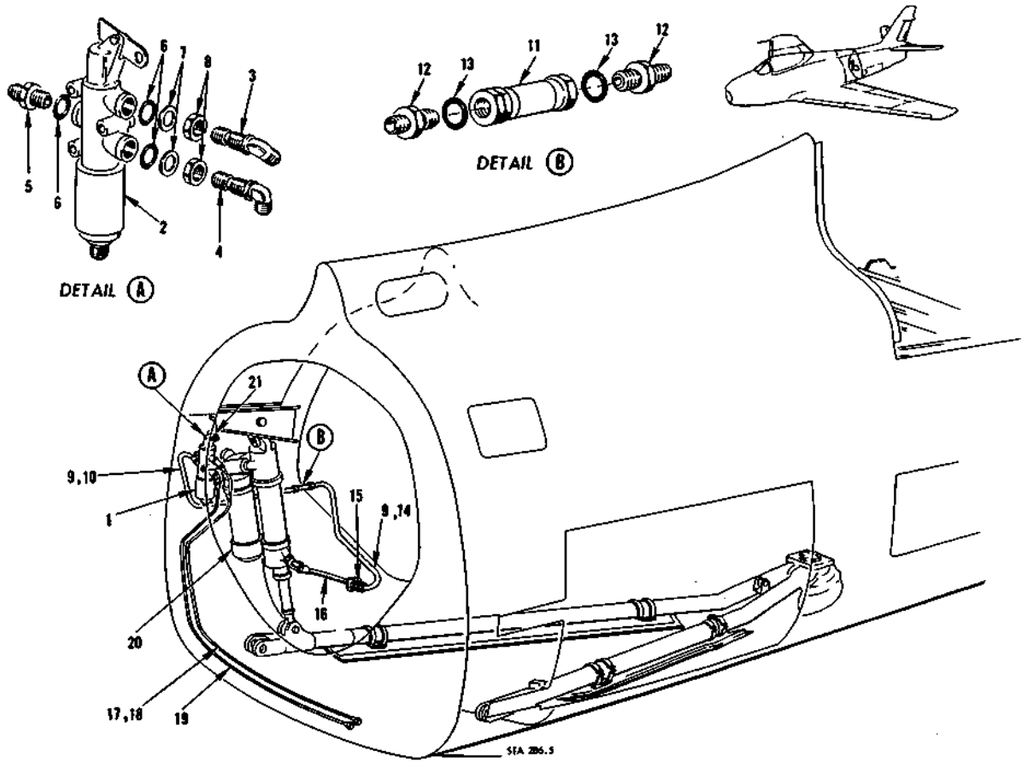

FJ-4/B-4-58-14

FIGURE 162 - ARRESTING GEAR HYDRAULIC SYSTEM

FIGURE & INDEX NO.	PART NUMBER	1 2 3 4 5 6 7 NOMENCLATURE	UNITS PER ASSY.	USABLE ON CODE	S/C NO.
162-1	209-58604	HYDRAULIC EQUIPMENT ASSEMBLY, Valve arresting hook selector	1		
	ATTACHING PARTS				
	AN3-16A	BOLT	3		
	2W18-10L	WASHER (NA) (89372)	3		
	---*---				
-2	51000	. VALVE, Hydraulic solenoid operated 3000 psi (HYRM) (81873)	1		
-3	MS21907-6	. ELBOW	1		
-4	MS21908-6	. ELBOW	1		
-5	MS21916-6-4	. REDUCER	1		
-6	AN6290-6	. GASKET	3		
-7	AN6291-6	. RING	2		
-8	AN6289-6	. NUT	2		
-9	209-58810-51	LINE ASSEMBLY, Arresting hook up from reducer in valve to union station 298 LH side	1	ET	
-10	209-58822-15	LINE ASSEMBLY, Arresting hook up from reducer in valve to one way restrictor	1	FR	
-11	2V12-56	VALVE ASSEMBLY, Hydraulic one-way restrictor (NA) (89372)	1	FR	
-12	MS21916-6-4	REDUCER	2	FR	
-13	AN6290-6	GASKET	2	FR	
-14	209-58822-17	LINE ASSEMBLY, Arresting hook up from one-way restrictor to union in bracket station 298	1	FR	
-15	MS21903-4	UNION	1		
	2W18-716	WASHER, Flat (NA) (89372)	1		
	AN924-4	NUT	1		
-16	MS28751-4-0084	HOSE ASSEMBLY	1		
-17	209-58810-91	LINE ASSEMBLY, Utility system return from check valve in tee in shear web to arresting hook snubber valve (see figure 135)	1	ET	
-18	209-58822-63	LINE ASSEMBLY, Utility system return from elbow wl 22 LH side to arresting hook snubber valve (see figure 134)	1	FR	
-19	209-58810-11	LINE ASSEMBLY, Utility system pressure from reducer in tee in shear web to arresting hook snubber valve (see figure 135)	1		
-20	181-56201-10	SNUBBER ASSEMBLY, Arresting gear (see Aft Fus - Arresting Gear)	1		
-21	209-56760	CABLE ASSEMBLY, Arresting gear control aft fuselage forward (see Surface and Secondary Controls)	1		

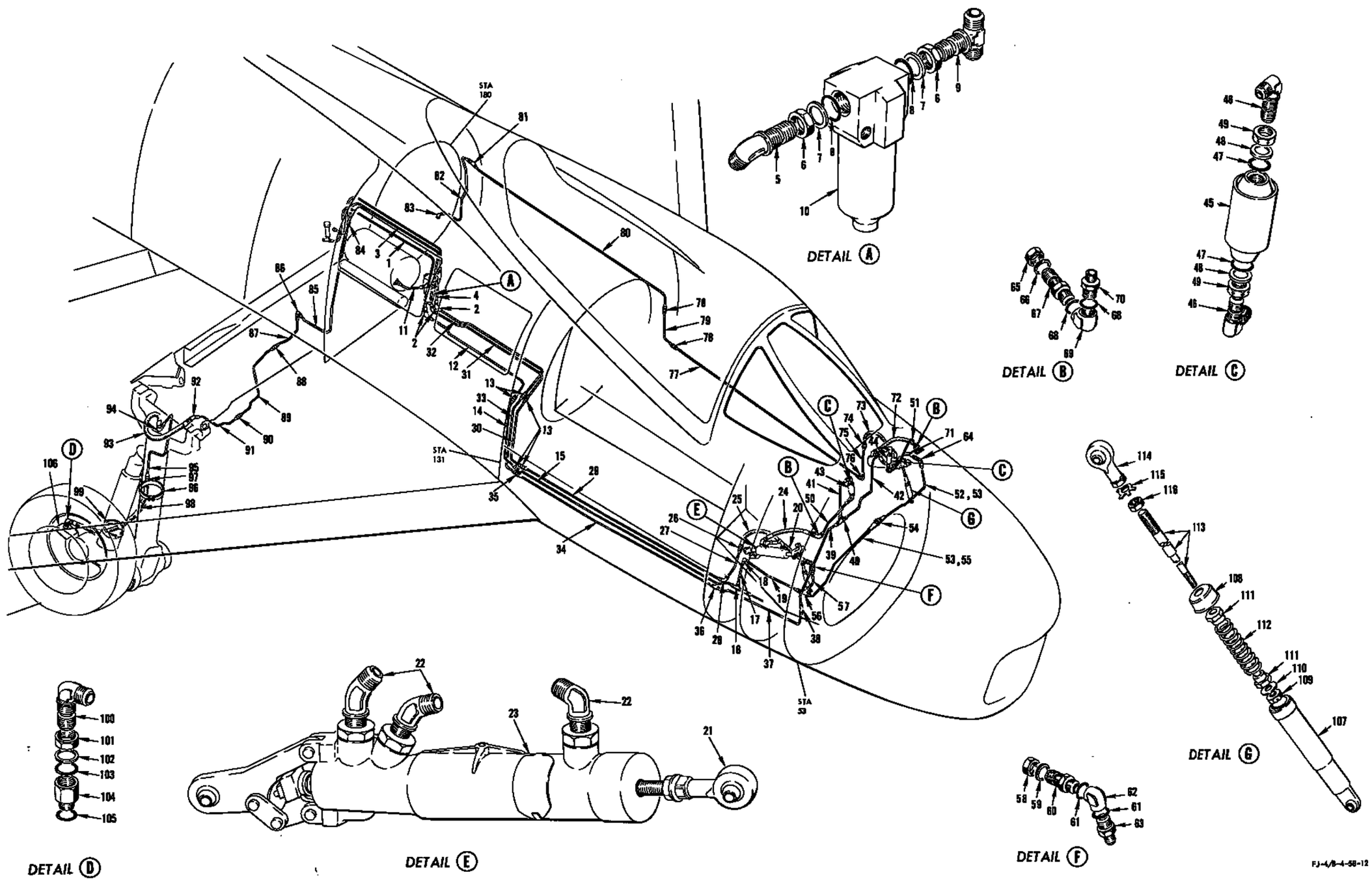

FIGURE 163 - WHEEL BRAKE SYSTEM

WHEEL BRAKE SYSTEM

FIGURE & INDEX NO.	PART NUMBER	1 2 3 4 5 6 7 NOMENCLATURE	UNITS PER ASSY.	USABLE ON CODE	S/C NO.
163-1	209-58807-11	LINE ASSEMBLY, Brake pressure tee in priority valve to bulkhead elbow station 156 (brake supply)	1	BR	
	209-58807-59	LINE ASSEMBLY, Brake pressure tee in priority valve to bulkhead elbow station 156 (brake supply)	1	BS	
-2	MS21908D6	ELBOW	3		
	2W18-916	WASHER, Flat (NA) (89372)	3		
	2W1V37-26-64	WASHER, Plain (NA) (89372)	3		
	AN924-6D	NUT	3		
-3	209-58807-15	LINE ASSEMBLY, Brake pressure bulkhead elbow station 156 to elbow station 182 (brake pressure)	1	BJ	
	209-58807-51	LINE ASSEMBLY, Brake pressure bulkhead elbow station 156 to elbow station 182 (brake pressure)	1	BK	
-4	209-58807-27	LINE ASSEMBLY, Brake return from line filter to elbow station 156 (brake return)	1		
	194-58660-11	HYDRAULIC EQUIPMENT ASSEMBLY, Filter brake return	1		
-5	MS21908D6	. ELBOW	1		
-6	AN6289-6	. NUT	2		
-7	AN6291-6	. RING	2		
-8	AN6290-6	. GASKET	2		
-9	MS21909D6	. TEE	1		
-10	MS28720-6	. FILTER (see figure 169 for breakdown)	1		
-11	209-58807-29	LINE ASSEMBLY, Brake return from line filter to reservoir	1	DN	
	209-58807-63	LINE ASSEMBLY, Brake return from line filter to reservoir	1	DP	
-12	209-58806-63	LINE ASSEMBLY, Brake supply from elbow station 156 to union station 131 (brake supply)	1	BH	
	209-58836-53	LINE ASSEMBLY, Brake supply from union station 131 to elbow station 156 (brake supply)	1	CZ	
	209-58866-43	LINE ASSEMBLY, Brake supply from station 131 to bulkhead elbow station 156	1	BK	
-13	MS21902D6	UNION	5		
-14	209-58806-51	LINE ASSEMBLY, Brake supply from union station 131 to union station 116 (brake supply)	1	Y	
	209-58836-61	LINE ASSEMBLY, Brake supply from union station 116 to union station 131	1	Z	
-15	209-58836-37	LINE ASSEMBLY, Brake supply from union station 118 to tee station 69 (brake supply)	1		
-16	MS21912D6	TEE	1		
	AN6289-6	NUT	1		
	AN6291-6	RING	1		
	AN6290-6	GASKET	1		
-17	209-58806-39	LINE ASSEMBLY, Brake supply from tee station 69 to union station 69 (brake supply)	1		
-18	MS21908D6	ELBOW	1		
	2W18-916	WASHER, Flat (NA) (89372)	1		
	AN924-6D	NUT	1		
-19	209-58806-67	LINE ASSEMBLY, Brake supply from elbow station 69 to union station 53 (brake supply)	1		
-20	MS28751-4-0120	HOSE ASSEMBLY (brake supply)	1		
	209-58667-22	HYDRAULIC EQUIPMENT ASSEMBLY, Cylinder power master brake RH	1		
	209-58667-21	HYDRAULIC EQUIPMENT ASSEMBLY, Cylinder power master brake LH	1		
	ATTACHING PARTS				
	AN4-10	BOLT (head of cylinder)	2		
	NAS464P4A15	BOLT (rod end)	2		
	2W18-416	WASHER, Flat (NA) (89372)	8		
	AN310-4	NUT	4		
	---*---				
-21	RE4F5	. ROD END ASSEMBLY (FAF) (21335)	1		
	2W15-5	. WASHER, Lock (NA) (89372)	1		
	1N7-5A	. NUT, Check (NA) (89372)	1		
-22	MS21907D4	. ELBOW	3		
	AN6289-4	. NUT	3		
	AN6291-4	. RING	3		
	AN6290-4	. GASKET	3		
-23	312106-1	. CYLINDER ASSEMBLY (GPC) (24988)	1		
-24	MS28751-4-0160	HOSE ASSEMBLY (brake return)	1		
-25	MS28751-4-0090	HOSE ASSEMBLY (brake pressure)	1		
-26	MS21907D4	ELBOW	1		
	2W18-716	WASHER, Flat (NA) (89372)	1		
	AN924-4D	NUT	1		
-27	209-58836-49	LINE ASSEMBLY, Brake pressure from bulkhead elbow station 70 to reducer station 70 (brake pressure)	1		
-28	MS21916D6-4	REDUCER	1		
-29	209-58836-39	LINE ASSEMBLY, Brake pressure elbow station 63 to union station 120 (brake pressure)	1		
-30	209-58806-49	LINE ASSEMBLY, Brake pressure from union station 116 to union station 131 (brake pressure)	1	BH	
	209-58836-69	LINE ASSEMBLY, Brake pressure from union station 116 to union station 131 (brake pressure)	1	BG	
-31	209-58806-59	LINE ASSEMBLY, Brake pressure from union station 131 to elbow station 156 (brake pressure)	1	BH	
	209-58836-59	LINE ASSEMBLY, Brake pressure from union station 131 to elbow station 156 (brake pressure)	1	CZ	
	209-58866-31	LINE ASSEMBLY, Brake pressure from union station 157.5 to union station 131 (brake pressure)	1	BK	
-32	209-58806-57	LINE ASSEMBLY, Brake return from union station 131 to elbow station 156 (brake return)	1	BH	

WHEEL BRAKE SYSTEM

FIGURE & INDEX NO.	PART NUMBER	1 2 3 4 5 6 7 NOMENCLATURE	UNITS PER ASSY.	USABLE ON CODE	S/C NO.
163	209-58836-57	LINE ASSEMBLY, Brake return from union station 131 to elbow station 156 (brake return)	1	CZ	
	209-58866-47	LINE ASSEMBLY, Brake return from union station 131 to bulkhead elbow station 156	1	BK	
-33	209-58806-47	LINE ASSEMBLY, Brake return from union station 116 to union station 131 (brake return)	1	BH	
	209-58836-67	LINE ASSEMBLY, Brake return from union station 116 to union station 131	1	BG	
-34	209-58836-31	LINE ASSEMBLY, Brake return from union station 63 to union station 116 (brake return)	1		
-35	MS21916D8-6	REDUCER	1		
-36	MS21916D8-6	REDUCER	1	EK	
	AN6290-8	GASKET	3	AD	
	MS21916D8-4	REDUCER	1	AD	
	AN938D8	TEE	1	AD	
	MS21902D8	UNION	1	AD	
-37	209-58836-79	LINE ASSEMBLY, Brake return from union station 52 to reducer station 69 (brake return)	1	AD	
	209-58836-81	LINE ASSEMBLY, Brake return from elbow station 50 to reducer station 69 (brake return)	1	EK	
-38	MS21907D6	ELBOW	1		
	2W18-916	WASHER, Flat (NA) (89372)	2		
	AN924-6D	NUT	1		
-39	209-58819-5	LINE ASSEMBLY, Brake return from tee station 53 to elbow station 53 (brake return)	1		
-40	MS21905D6	TEE	1		
-41	194-58806-33	LINE ASSEMBLY, Brake return from elbow RH emergency brake reservoir to tee fuselage station 53 (brake return)	1		
-42	209-58819-11	LINE ASSEMBLY, LH brake return from wheel brake reservoir to tee at station 53	1		
-43	194-58652-2	HYDRAULIC EQUIPMENT ASSEMBLY, Reservoir wheel brake emergency RH	1		
-44	194-58652-1	HYDRAULIC EQUIPMENT ASSEMBLY, Reservoir wheel brake emergency LH	1		
-45	187-58060	. HEAD TANK ASSEMBLY, Hydraulic wheel brake emergency	1		
-46	MS21908D6	. ELBOW	2		
-47	AN6290-6	. GASKET	2		
-48	AN6291-6	. RING	2		
-49	AN6289-6	. NUT	2		
-50	209-58819-29	LINE ASSEMBLY, Brake return from RH brake reservoir to reducer station 53 RH (brake return)	1		
-51	209-58819-27	LINE ASSEMBLY, Brake return from LH brake reservoir to reducer station 53 LH (brake return)	1	BR	
	209-58819-41	LINE ASSEMBLY, Brake return from LH brake	1	BS	
-52	209-58819-39	LINE ASSEMBLY, Brake supply from union station 53 to elbow LH station 53 (brake supply)	1	DB	
-53	209-58819-31	LINE ASSEMBLY, Brake supply from tee RH station 53 to elbow LH station 53 LH (brake supply)	1	NG	
-54	MS21902D4	UNION	1	DB	
-55	209-58819-37	LINE ASSEMBLY, Brake supply from tee RH station 53 to elbow LH station 53 LH (brake supply)	1	DB	
	AN924-6D	NUT	1	BW	
-56	MS21916D6-4	REDUCER	2		
	AN6290-6	GASKET	3		
	AN938D6	TEE	1		
	MS21903D6	UNION	1		
	AN924-6D	NUT	1		
	2W18-916	WASHER, Flat (NA) (89372)	1		
-57	209-58819-7	LINE ASSEMBLY, Brake supply reducer in tee station 53 to elbow station 53 RH (brake supply)	1		
-58	AN924-4D	NUT	1		
-59	2W18-716	WASHER, Flat (NA) (89372)	1		
-60	MS21903D4	UNION	1		
-61	AN6290-4	GASKET	2		
-62	AN939D4	ELBOW	1		
-63	MS21902D4	UNION	1		
-64	MS21907D4	ELBOW	1		
	2W18-716	WASHER, Flat (NA) (89372)	1		
	AN924-4D	NUT	1		
-65	AN924-4D	NUT	2		
-66	2W18-716	WASHER, Flat (NA) (89372)	2		
-67	MS21903D4	UNION	2		
-68	AN6290-4	GASKET	4		
-69	AN939D4	ELBOW	2		
-70	MS21916D6-4	REDUCER	2		
-71	MS28751-4-0130	HOSE ASSEMBLY (brake supply)	1		
-72	MS28751-4-0180	HOSE ASSEMBLY (brake return)	1		
-73	MS28751-4-0090	HOSE ASSEMBLY (brake pressure)	1		
-74	MS21907D4	ELBOW	1		
	2W18-716	WASHER, Flat (NA) (89372)	1		
	AN924-4D	NUT	1		
-75	209-58805-75	LINE ASSEMBLY, Brake pressure from bulkhead elbow station 70 to reducer station 71.5	1		
-76	AN939D4	ELBOW	1		
	MS21902D4	UNION	1		
	MS21916D6-4	REDUCER	1		

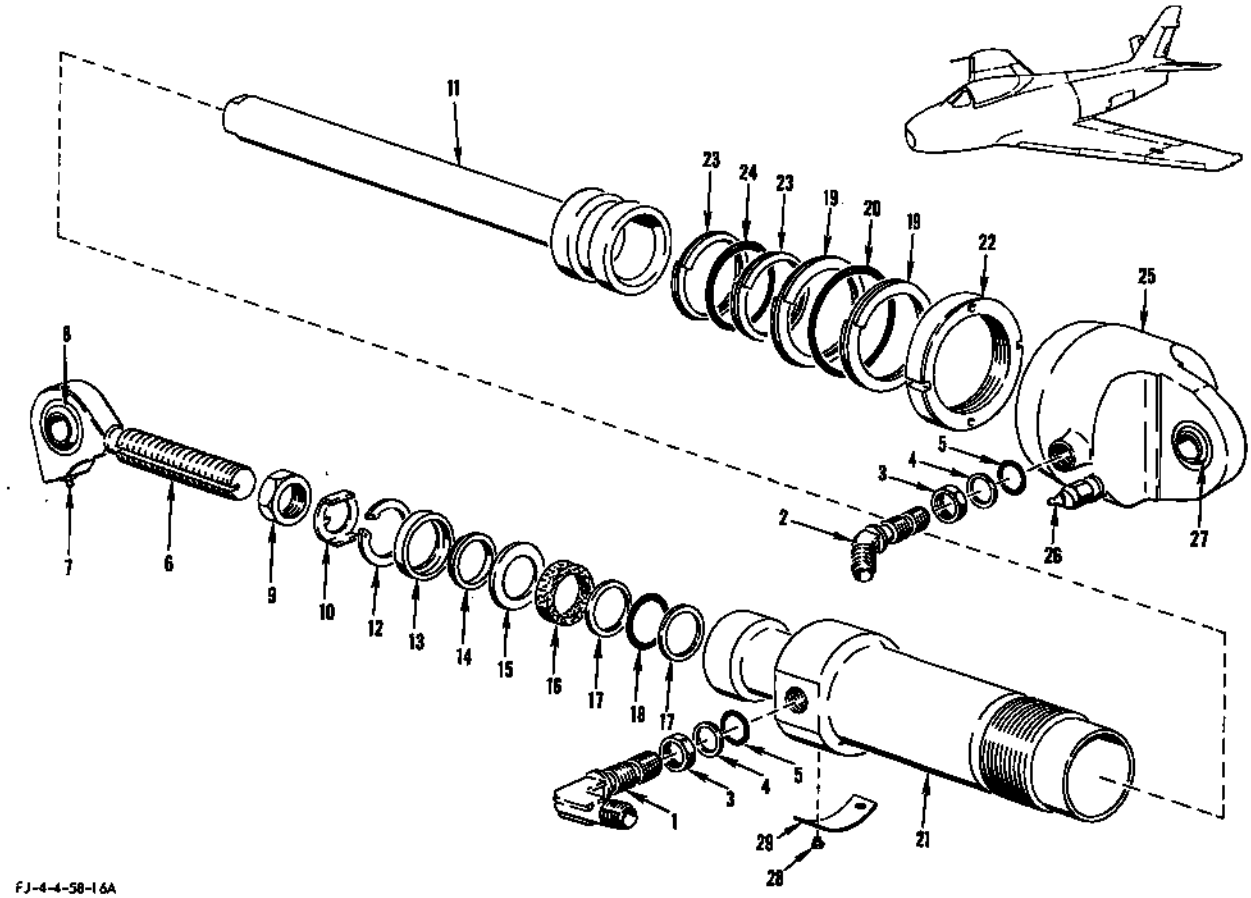

FIGURE 166 - WINGFOLD ACTUATING ACTUATOR CYLINDER ASSEMBLY - APPLICABLE TO AIRCRAFT CODED (AW)

FIGURE & INDEX NO.	PART NUMBER	1 2 3 4 5 6 7 NOMENCLATURE	UNITS PER ASSY.	USABLE ON CODE	S/C NO.
166	209-58631-1	HYDRAULIC EQUIPMENT ASSEMBLY, Cylinder wingfold actuating LH	1	AW	
	209-58631-2	HYDRAULIC EQUIPMENT ASSEMBLY, Cylinder wingfold actuating RH	1	AW	
-1	MS21908D4	. ELBOW	1	AW	
-2	MS21907D4	. ELBOW	1	AW	
-3	AN6289-4	. NUT	1	AW	
-4	AN6291-4	. RING	2	AW	
-5	AN6290-4	. GASKET	2	AW	
	209-58031	. CYLINDER ASSEMBLY, Hydraulic wingfold actuating	1	AW	
-6	209-58167-11	. . ROD END ASSEMBLY, Hydraulic wingfold actuating cylinder	1	AW	
-7	MS15001-1	. . . FITTING, Lubrication	1	AW	
-8	HSBG-9SA	. . . BEARING (HLF) (97613)	1	AW	
-9	1N7-11A	. . NUT, Check (NA) (89372)	1	AW	
-10	2W15-11	. . WASHER, Lock (NA) (89372)	1	AW	
-11	209-58166	. . PISTON, Hydraulic wingfold actuating cylinder	1	AW	
-12	NAS50-143	. . RING, Internal retainer	1	AW	
-13	7R4-18D	. . RETAINER, Wiper ring (NA) (89372)	1	AW	
-14	AN6231A8	. . WIPER	1	AW	
-15	2W1AL61-45-40	. . WASHER, Plain (NA) (89372)	1	AW	
-16	2W12-18	. . WASHER, Felt (NA) (89372)	1	AW	
-17	MS28782-18	. . RING	2	AW	
-18	AN6227-18	. . PACKING	1	AW	
-19	MS28782-29	. . RING	2	AW	
-20	AN6230-6	. . PACKING	1	AW	
-21	209-58165	. . CYLINDER END, Hydraulic wingfold	1	AW	
-22	1NG-38	. . NUT, Cylinder lock (NA) (89372)	1	AW	
-23	MS28783-6	. . RING	2	AW	
-24	AN6227-29	. . PACKING	1	AW	
-25	209-58164-11	. . HEAD ASSEMBLY, Hydraulic wingfold actuating cylinder	1	AW	
-26	MS15001-3	. . . FITTING, Lubrication	1	AW	
-27	HSBG-9SA	. . . BEARING (HLF) (97613)	1	AW	
-28	AN535-00-2	. . SCREW	2	AW	
-29	5P33	. . PLATE, Hydraulic actuating cylinder name (NA) (89372)	1	AW	

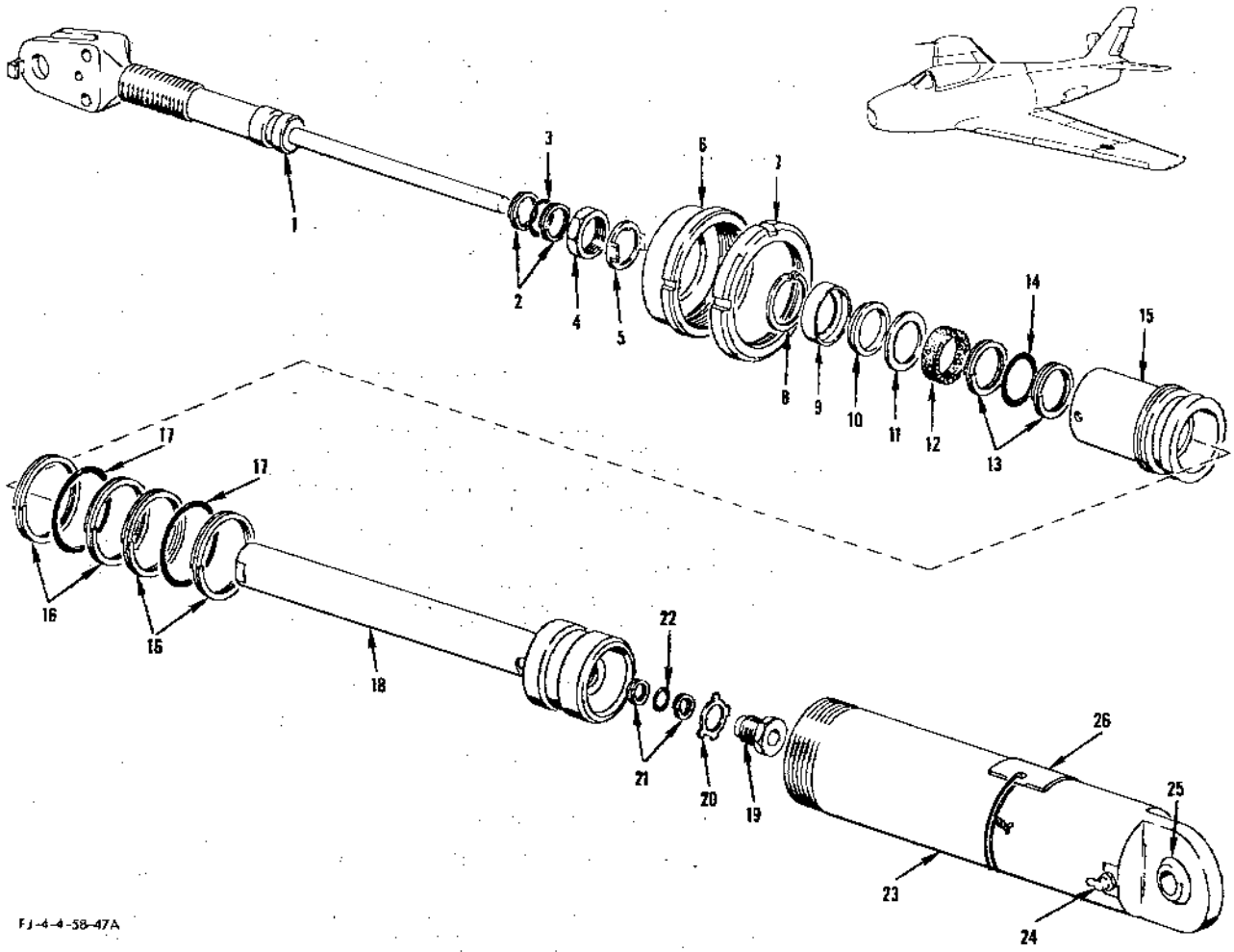

FIGURE 167 - WINGFOLD ACTUATING CYLINDER ASSEMBLY - APPLICABLE TO AIRCRAFT CODED (BY)

FIGURE & INDEX NO.	PART NUMBER	1 2 3 4 5 6 7 NOMENCLATURE	UNITS PER ASSY.	USABLE ON CODE	S/C NO.
167	209-58030	CYLINDER ASSEMBLY, Hydraulic wingfold actuating swivel	2	BY	
-1	209-58149	. ROD END ASSEMBLY, Hydraulic wingfold actuating swivel cylinder	1	BY	
-2	MS28782-9	. RING	2	BY	
-3	AN6227-9	. PACKING	1	BY	
-4	1N7-11A	. NUT, Check (NA) (89372)	1	BY	
-5	2W15-11	. WASHER, Lock (NA) (89372)	1	BY	
-6	209-58150	. RETAINER, Hydraulic wingfold actuating swivel cylinder	1	BY	
-7	1N6-38	. NUT, Cylinder lock (NA) (89372)	1	BY	
-8	NAS50-143	. RING	1	BY	
-9	7R4-18D	. RETAINER, Wiper ring (NA) (89372)	1	BY	
-10	AN6231A8	. SCRAPER	1	BY	
-11	2W1AL61-45-40	. WASHER, Plain (NA) (89372)	1	BY	
-12	2W12-18	. WASHER, Felt (NA) (89372)	1	BY	
-13	MS28782-18	. RING	2	BY	
-14	AN6227-18	. PACKING	1	BY	
-15	209-58147	. END, Hydraulic wingfold actuating swivel cylinder	1	BY	
-16	MS28782-29	. RING	4	BY	
-17	AN6227-29	. PACKING	2	BY	
-18	209-58144	. PISTON, Hydraulic wingfold actuating swivel cylinder	1	BY	
-19	209-58145	. PLUG, Hydraulic wingfold actuating swivel cylinder piston	1	BY	
-20	2W11-7	. WASHER, Tab lock (NA) (89372)	1	BY	
-21	MS28782-5	. RING	2	BY	
-22	AN6227-5	. PACKING	1	BY	
-23	209-58148	. BODY ASSEMBLY, Hydraulic wingfold actuating swivel cylinder	1	BY	
-24	MS15001-3	. . FITTING, Lubrication	1	BY	
-25	HSBG-95A	. . BEARING (BLF) (97613)	1	BY	
-26	5P33	. PLATE, Hydraulic actuating cylinder name (NA) (89372)	1	BY	

OUTBOARD WING DROOP LEADING EDGE STOP ASSEMBLIES AND FITTINGS

FIGURE & INDEX NO.	PART NUMBER	1 2 3 4 5 6 7 NOMENCLATURE	UNITS PER ASSY.	USABLE ON CODE
171-1	209-17502-1	OUTBOARD DROOP LEADING EDGE LH (see figure 5 for additional breakdown)	1	ET
	209-17502-11	OUTBOARD DROOP LEADING EDGE LH (see figure 5 for additional breakdown)	1	FR
-2	209-17502-2	OUTBOARD DROOP LEADING EDGE RH (see figure 5 for additional breakdown)	1	ET
	209-17502-12	OUTBOARD DROOP LEADING EDGE RH (see figure 5 for additional breakdown)	1	FR
-3	209-17538-1	. PAD, Leading edge 0% station 224.125 stop LH	1	
	209-17538-2	. PAD, Leading edge 0% station 224.125 stop RH	1	
-4	209-17534	. BLOCK, Droop leading edge outer panel inboard actuator mating	1	
-5	209-17520-5	. CHANNEL, Droop leading edge up stop	1	
-6	209-17539-1	. PAD, Leading edge 0% station 239.718 stop LH	1	
	209-17539-2	. PAD, Leading edge 0% station 239.718 stop RH	1	
-7	209-17516-1	. BRACKET, Leading edge wing 0% station 251.343 LH	1	
	209-17516-2	. BRACKET, Leading edge wing 0% station 251.343 RH	1	
	ATTACHING PARTS			
-8	AN509-10R10	. SCREW	4	
-9	NAS221-10	. SCREW	3	
-10	NAS221-11	. SCREW	1	
-11	AN365-1032	. NUT	6	
-12	2W18-10	. WASHER, Flat (NA) (89372)	6	
-13	AN509-10R14	. SCREW	6	
	---*---			
-14	209-17520-5	. CHANNEL, Droop leading edge up stop	1	
-15	209-17540-1	. PAD, Leading edge 0% station 256.984 stop LH	1	
-16	209-17535	. BLOCK, Droop leading edge outer panel outboard actuator mating	1	
-17	209-17520-3	. CHANNEL, Droop leading edge up stop	1	
-18	209-17541-1	. PAD, Leading edge 0% station 275.25 stop LH	1	
	209-17541-2	. PAD, Leading edge 0% station 275.25 stop RH	1	
-19	209-17522-1	. ANGLE ASSEMBLY, Droop leading edge up stop outboard LH	1	
	209-17522-2	. ANGLE ASSEMBLY, Droop leading edge up stop outboard RH	1	
-20	209-17542-1	. PAD, Leading edge 0% station 294.335 stop LH	1	
	209-17542-2	. PAD, Leading edge 0% station 294.335 stop RH	1	
-21	209-17524-19	FITTING ASSEMBLY, Leading edge stop outer panel	1	
	ATTACHING PARTS			
-22	AN365-1032	NUT	3	
-23	2W18-10M	WASHER, Flat (NA) (89372)	3	
-24	AN509-10R17	SCREW	2	
-25	AN509-10R19	SCREW	1	
	---*---			
-26	1191-4CNx-3/4	. INSERT, Heli-coil (AF) (91767)	1	
-27	NAS428-4-12	BOLT	1	
-28	1N7-4A	NUT, Check (NA) (89372)	1	
-29	209-17513	FITTING ASSEMBLY, Leading edge actuator attaching forward 0% station 238.218	1	
	ATTACHING PARTS			
-30	209-917038-3	SCREW, Droop leading edge (NA Dwg Design Spec)	1	
-31	NAS334CPA12	BOLT	2	
	---*---			
-32	AA2205W428	. BARREL NUT (AAMP) (83885)	2	
-33	1191-5CNx-25/32	. INSERT, Heli-coil (AF) (91767)	1	
-34	4B19S4-006	. BUSHING, Press fit plain (NA) (89372)	2	
	209-526131-11	STOP ASSEMBLY, Wing leading edge actuator 0% station 239.718 LH (supersedes 209-526116-1 for future procurement)	1	
	209-526131-12	STOP ASSEMBLY, Wing leading edge actuator 0% station 239.718 RH (supersedes 209-526116-2 for future procurement)	1	
	ATTACHING PARTS			
-35	AN365-1032	NUT	1	
-36	2W18-10M	WASHER, Flat (NA) (89372)	1	
-37	AN509-10R11	SCREW	2	
-38	AN509-10R6	SCREW	1	
-39	AN365-1032	NUT (LH only)	2	
-40	2W18-10M	WASHER, Flat (NA) (89372) (LH only)	4	
-41	AN173-10A	SCREW (LH only)	2	
	AN173-11A	SCREW (RH only)	2	
	2W18-10M	WASHER, Flat (NA) (89372) (RH only) (install under bolt head)	2	
	2W18-10	WASHER, Flat (NA) (89372) (RH only) (used as spacer)	4	
	AN365-1032	NUT (RH only)	2	
	---*---			
-42	1191-4CNx-3/4	. INSERT, Heli-coil (AF) (91767)	1	
-43	3591-3CNx-.285	. INSERT, Heli-coil (AF) (91767)	1	
-44	209-526131-3	. FITTING, Wing leading edge actuator 0% station 239.718 stop assembly LH	1	
	209-526131-4	. FITTING, Wing leading edge actuator 0% station 239.718 stop assembly RH	1	
-45	NAS428-4-12	BOLT	1	
-46	1N7-4A	NUT, Check (NA) (89372)	1	
-47	1EN8-1	SWITCH (MCS) (91929) (see Electrical and Instrument)	1	
-48	209-54260-1	FITTING ASSEMBLY, Leading edge stop 0% station 251.343 LH	1	
	209-54260-2	FITTING ASSEMBLY, Leading edge stop 0% station 251.343 RH	1	
	ATTACHING PARTS			
-49	AN365-1032	NUT	3	
-50	2W18-10M	WASHER, Flat (NA) (89372)	3	
-51	AN509-10R11	SCREW	3	
	---*---			
-52	1191-4CNx-5/8	. INSERT, Heli-coil (AF) (91767)	1	
-53	2L7-2	LUG, Safety (NA) (89372)	1	
-54	5B2-7	BOLT, Adjustment (NA) (89372)	1	
-55	1N7-4A	NUT, Check (NA) (89372)	1	
-56	209-17524-13	FITTING ASSEMBLY, Leading edge stop outer panel	1	

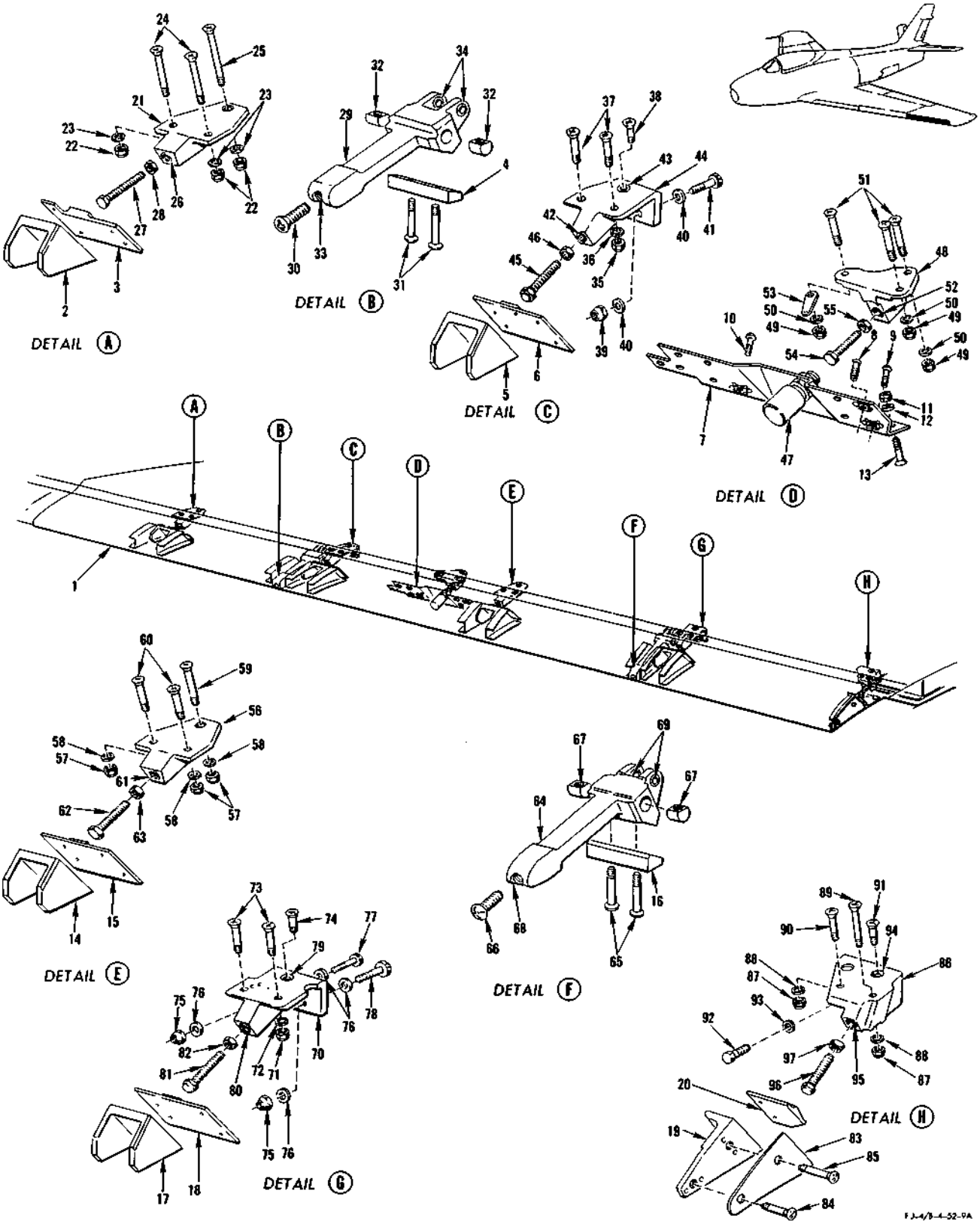

FIGURE 171 - OUTBOARD WING DROOP LEADING EDGE STOP ASSEMBLIES AND FITTINGS

OUTBOARD WING DROOP LEADING EDGE STOP ASSEMBLIES AND FITTINGS

FIGURE & INDEX NO.	PART NUMBER	1 2 3 4 5 6 7 NOMENCLATURE	UNITS PER ASSY.	USABLE ON CODE
171		ATTACHING PARTS		
-57	AN365-1032	NUT	3	
-58	2W18-10	WASHER, Flat (NA) (89372)	3	
-59	AN509-10R15	SCREW	1	
-60	AN509-10R12	SCREW	2	
		---*---		
-61	1191-4CNx-3/4	. INSERT, Heli-coil (AF) (91767)	1	
-62	NAS428-4-12	BOLT	1	
-63	1N7-4A	NUT, Check (NA) (89372)	1	
-64	209-17514-1	FITTING ASSEMBLY, Leading edge actuator forward 0% station 273.75 LH	1	ET
	209-17514-11	FITTING ASSEMBLY, Leading edge actuator forward 0% station 273.75 LH	1	FR
	209-17514-11	FITTING ASSEMBLY, Leading edge actuator forward 0% station 273.75 RH	1	
		ATTACHING PARTS		
-65	NAS334CPA12	BOLT	2	
-66	209-917038-3	SCREW, Droop leading edge (NA Dwg Design Spec)	1	
		---*---		
-67	AA2205W428	. BARREL NUT (AAMP) (83885)	2	
-68	1191-5CNx-5/8	. INSERT, Heli-coil (AF) (91767)	1	
-69	4B19S4-006	. BUSHING, Press fit plain (NA) (89372)	2	
-70	209-526123-11	STOP ASSEMBLY, Wing leading edge actuator 0% station 275.254 LH (supersedes 209-526115-1 for future procurement)	1	
	209-526123-12	STOP ASSEMBLY, Wing leading edge actuator 0% station 275.254 RH (supersedes 209-526115-2 for future procurement)	1	
		ATTACHING PARTS		
-71	AN365-1032	NUT	1	
-72	2W18-10M	WASHER, Flat (NA) (89372)	1	
-73	AN509-10R11	SCREW	2	
-74	AN509-10R6	SCREW	1	
-75	AN363C1032	NUT (nonmagnetic) (used on 209-526115-1 or 209-526123-11) (LH only)	2	
	AN365-1032	NUT (used on 209-526115-2 or 209-526123-12) (RH only)	1	
-76	2W18-10M	WASHER, Flat (NA) (89372)	4	
-77	NAS501-3-7A	BOLT (nonmagnetic) (used on 209-526115-1 or 209-526123-11) (LH only)	1	
	AN173-7A	BOLT (used on 209-526115-2 or 209-526123-12) (RH only)	1	
-78	NAS501-3-6A	BOLT (nonmagnetic) (used on 209-526115-1 or 209-526123-11) (LH only)	1	
	AN173-6A	BOLT (used on 209-526115-2 or 209-526123-12) (RH only)	1	
		---*---		
-79	3591-3CNx-.285	. INSERT, Heli-coil (AF) (91767)	1	
-80	1191-4CNx-3/4	. INSERT, Heli-coil (AF) (91767)	1	
-81	NAS428-4-12	BOLT	1	
-82	1N7-4A	NUT, Check (NA) (89372)	1	
-83	209-17515-1	BLOCK, Droop leading edge rib 0% station 295.024 LH	1	
	209-17515-2	BLOCK, Droop leading edge rib 0% station 295.024 RH	1	
		ATTACHING PARTS		
-84	AN509-10R12	SCREW (forward)	1	
-85	AN509-10R13	SCREW (aft)	1	
		---*---		
-86	209-526130-11	STOP ASSEMBLY, Wing leading edge actuator 0% station 294.335 LH (supersedes 209-526117-1 for future procurement)	1	
	209-526130-12	STOP ASSEMBLY, Wing leading edge actuator 0% station 294.335 RH (supersedes 209-526117-2 for future procurement)	1	
		ATTACHING PARTS		
-87	AN365-1032	NUT	2	
-88	2W18-10M	WASHER, Flat (NA) (89372)	2	
-89	AN509-10R22	SCREW (forward outboard)	1	
-90	AN509-10R11	SCREW (forward inboard)	1	
-91	AN509-10R6	SCREW (aft)	1	
-92	NAS501-3-7A	BOLT (nonmagnetic) (used with 209-526117-1 or 209-526130-11) (LH only)	2	
	AN173-7A	BOLT (used with 209-526117-2 or 209-526130-12) (RH only)	2	
-93	2W18-10M	WASHER, Flat (NA) (89372)	2	
		---*---		
-94	3591-3CNx-.285	. INSERT, Heli-coil (AF) (91767)	1	
-95	1191-4CNx-3/4	. INSERT, Heli-coil (AF) (91767)	1	
-96	NAS428-4-12	BOLT	1	
-97	1N7-4A	NUT, Check (NA) (89372)	1	

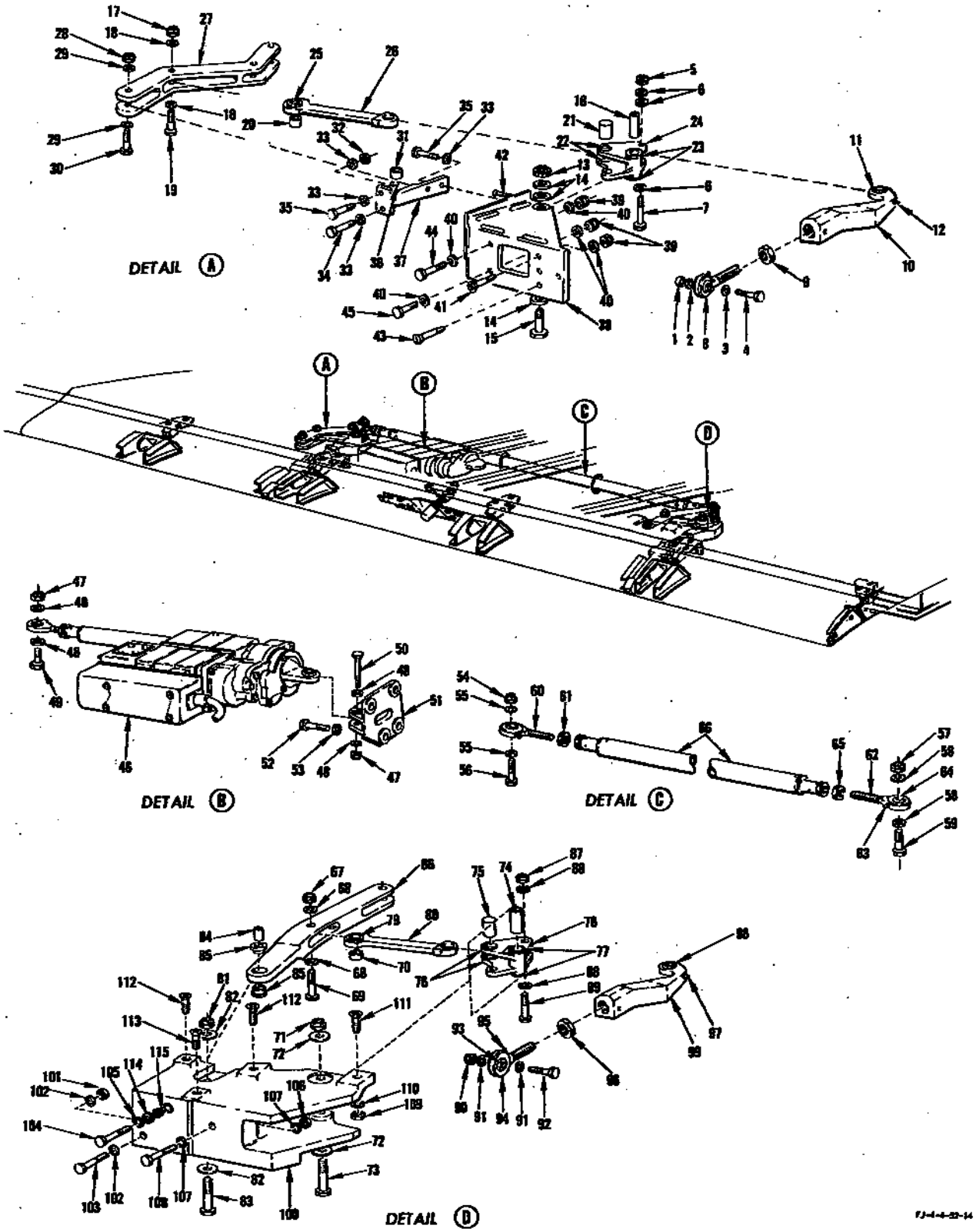

FIGURE 172 - OUTBOARD WING DROOP LEADING EDGE MECHANISM AND SUPPORT - APPLICABLE TO AIRCRAFT CODED (ET)

OUTBOARD WING DROOP LEADING EDGE MECHANISM AND SUPPORT - APPLICABLE TO AIRCRAFT CODED (ET)

FIGURE & INDEX NO.	PART NUMBER	1 2 3 4 5 6 7 NOMENCLATURE	UNITS PER ASSY.	USABLE ON CODE
172-80	209-526133-9	. . LINK, Leading edge overcenter actuator link assembly (used on 209-526133-21 only)	1	ET
	209-526133-7	. . LINK, Leading edge overcenter actuator link assembly (used on 209-526133-11 only)	1	ET
	209-526124-21	BELLCRANK ASSEMBLY, Leading edge actuator 0% station 270.156 (LH only) (supersedes 209-526102-21 for future procurement)	1	ET
	209-526124-11	BELLCRANK ASSEMBLY, Leading edge actuator 0% station 270.156 (RH only) (supersedes 209-526102-11 for future procurement)	1	ET
	ATTACHING PARTS			
-81	1N1B4	NUT, Aircraft castle (NA) (LH only)	1	ET
	AN310-4	NUT (RH only)	1	ET
	AN380C2-2	PIN (LH only)	1	ET
	AN380-2-2	PIN (RH only)	1	ET
-82	2W18-416M	WASHER, Flat (NA)	2	ET
-83	209-52658-7	BOLT, Nonmagnetic (LH only)	1	ET
	AN174-13	BOLT (RH only)	1	ET
-84	4B21B4-016	BUSHING, Spacer (NA) (LH only)	1	ET
	4B21M-S4-016	BUSHING, Spacer (NA) (RH only)	1	ET
	---*---			
-85	4B20B6-005	. BUSHING, Press fit flanged (NA)	2	ET
-86	209-526124-5	. BELLCRANK, Leading edge actuator 0% station 270.156 bellcrank assy (LH only)	1	ET
	209-526124-3	. BELLCRANK, Leading edge actuator 0% station 270.156 bellcrank assy (RH only)	1	ET
	209-52674-11	TURNBUCKLE ASSEMBLY, Leading edge actuator outboard (LH only) (supersedes 209-526113-11 and 209-526113-31 for future procurement)	1	ET
	ATTACHING PARTS			
-87	1N1B4	NUT, Aircraft castle (NA) (LH only)	1	ET
	AN320-4	NUT (RH only)	1	ET
	AN380C2-2	PIN (LH only)	1	ET
	AN380-2-2	PIN (RH only)	1	ET
-88	2W18-416M	WASHER, Flat (NA) (3 used on RH)	2	ET
-89	209-52658-3	BOLT, Nonmagnetic (LH only)	1.	ET
-90	1N1B4	NUT, Aircraft castle (NA) (LH only)	1	ET
	AN320-4	NUT (RH only)	1	ET
	AN380C2-2	PIN (LH only)	1	ET
	AN380-2-2	PIN (RH only)	1	ET
-91	2W18-416M	WASHER, Flat (NA) (LH only)	2	ET
	2W18-416	WASHER, Flat (NA) (RH only)	1	ET
	2W1AL17-16-16	WASHER, Plain (NA) (under bolt head) (RH only)	1	ET
-92	209-52658-11	BOLT, Nonmagnetic (LH only)	1	ET
	NAS464-4-16	BOLT (RH only)	1	ET
	---*---			
	209-52669-3	. ROD END ASSEMBLY, Droop leading edge turnbuckle	1	ET
-93	209-52669-9	. . BEARING, Droop leading edge turnbuckle rod end assembly	1	ET
-94	209-52669-5	. . ROD END, Droop leading edge turnbuckle rod end assembly	1	ET
-95	NAS516-1	. . FITTING, Lubricator	1	ET
-96	209-52667-3	. CHECK NUT, Droop leading edge turnbuckle	1	ET
	209-526134-21	. ROD END ASSEMBLY, Outboard leading edge preload (used on 209-52674-11 only)	1	ET
-97	NAS516-1	. . FITTING, Lubricator	1	ET
-98	HSBG-4S	. . BEARING (HLF)	1	ET
-99	209-526134-7	. . FITTING, Outboard leading edge preload rod end assembly	1	ET
-100	209-526119-1	SUPPORT ASSEMBLY, Leading edge actuator outboard linkage (supersedes 209-526112-1 for future procurement)	1	ET
	209-526119-2	SUPPORT ASSEMBLY, Leading edge actuator outboard linkage (supersedes 209-526112-2 for future procurement)	1	ET
	ATTACHING PARTS			
-101	AN363C1032	NUT (nonmagnetic) (LH only)	1	ET
	AN365-1032	NUT (RH only)	1	ET
-102	2W18-10M	WASHER, Flat (NA)	2	ET
-103	NAS501-3-6A	BOLT (nonmagnetic) (LH only)	1	ET
	AN173-6A	BOLT (RH only)	1	ET
-104	NAS501-3-3A	BOLT (nonmagnetic) (LH only)	1	ET
	AN173-3A	BOLT (RH only)	1	ET
-105	2W18-10M	WASHER, Flat (NA)	1	ET
-106	AN363C1032	NUT (nonmagnetic) (LH only)	1	ET
	AN365-1032	NUT (RH only)	1	ET
-107	2W18-10M	WASHER, Flat (NA)	2	ET
-108	NAS501-3-5A	BOLT (nonmagnetic) (LH only)	1	ET
	AN173-5A	BOLT (RH only)	1	ET
-109	AN363C1032	NUT (nonmagnetic) (LH only)	4	ET
	AN365-1032	NUT (RH only)	4	ET
-110	2W18-10	WASHER, Flat (NA)	4	ET
-111	7S27-10-12	SCREW, 100° flush head A-286 steel corrosion and heat resistant (NA) (nonmagnetic) (LH only)	1	ET
	AN509-10R12	SCREW (RH only)	1	ET
-112	7S27-10-16	SCREW, 100° flush head A-286 steel corrosion and heat resistant (NA) (nonmagnetic) (LH only)	2	ET
	AN509-10R16	SCREW (RH only)	2	ET
-113	7S27-10-13	SCREW, 100° flush head A-286 steel corrosion and heat resistant (NA) (nonmagnetic) (LH only)	1	ET
	AN509-10R13	SCREW (RH only)	1	ET
	---*---			
-114	RL24SB-7	. RING (ROSN)	1	ET
-115	RD205SB-5.5L	. INSERT (ROSN)	1	ET

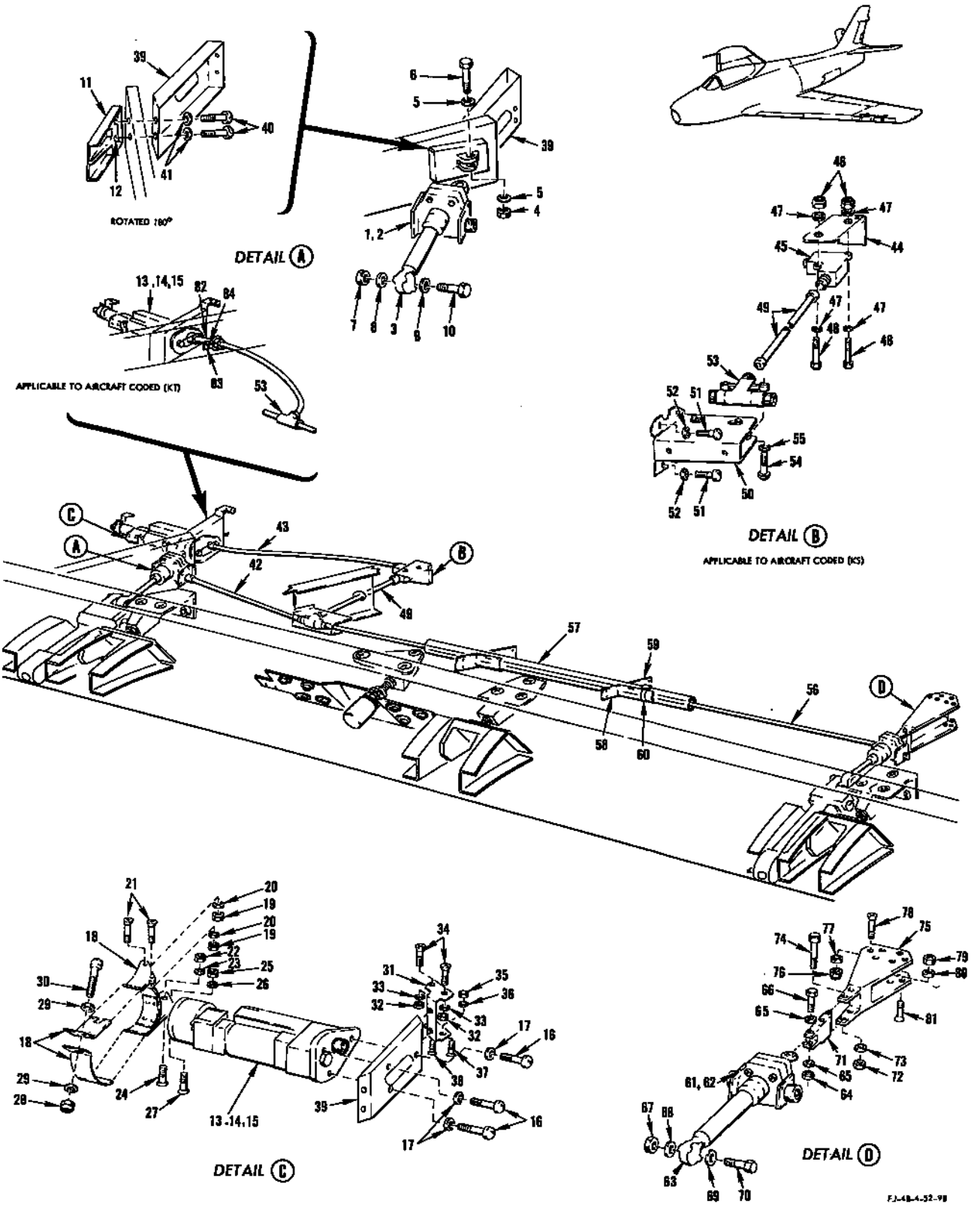

FIGURE 173 - OUTBOARD WING DROOP LEADING EDGE MECHANISM AND SUPPORT - APPLICABLE TO AIRCRAFT CODED (FR)

OUTBOARD WING DROOP LEADING EDGE MECHANISM AND SUPPORT - APPLICABLE TO AIRCRAFT CODED (FR)

FIGURE & INDEX NO.	PART NUMBER	1 2 3 4 5 6 7 NOMENCLATURE	UNITS PER ASSY.	USABLE ON CODE	S/C NO.
173-1	471T100-301	SCREW JACK, Wing leading edge flap (Talley Machine and Mfg Co) (98889) (superseded by 471T100-1 (Talley Machine and Mfg Co) (98889) for future procurement)	1	PN	505
-2	471T100-1	SCREW JACK, Wing leading edge flap (Talley Machine and Mfg Co) (98889) (supersedes 471T100-301 (Talley Machine and Mfg Co) (98889) for future procurement)	1	PP	505
-3	471119	. FITTING, Machined tongue (Talley Machine and Mfg Co) (98889) (replacement for cast tongue fitting)	1	FR	
	USB-4Y	. . BEARING, Spherical, nonmagnetic, Type I (Talley Machine and Mfg Co)-(98889)	1	FR	
	471142-1	. . PIN (Talley Machine and Mfg Co) (98889)	1	FR	
-4	AN364-428	NUT	1	FR	
-5	2W18-416M	WASHER, Flat (NA) (89372)	2	FR	
-6	NAS464-4A13	BOLT	1	FR	
-7	AN320-4	NUT	1	FR	
-8	2W18-416	WASHER, Flat (NA) (89372)	1	FR	
-9	2W1AL17-16-16	WASHER, Plain (NA) (89372) (use under bolthead)	1	FR	
-10	NAS464-4-16	BOLT	1	FR	
-11	209-14508-5	STIFFENER ASSEMBLY, Outboard wing rib wing station 177.527 LH	1	FR	
	209-14508-6	STIFFENER ASSEMBLY, Outboard wing rib wing station 177.527 RH	1	FR	
-12	RD205SB-5.5L	. INSERT (ROSN) (83324)	2	FR	
	RL24SB-7	. RING (ROSN) (83324)	2	FR	
-13	D-1900	ACTUATOR (HOOV) (81817) (for breakdown see Technical Manual NA 03-5CHP-510) (superseded by D-1900-2 (HOOV) (81817) for future procurement)	1	NJ	
-14	D-1900-2	ACTUATOR (HOOV) (81817) (supersedes D-1900 (HOOV) (81817) for future procurement and superseded by D-1900-3 (HOOV) (81817) for future procurement)	1	SM	
-15	D-1900-3	ACTUATOR (HOOV) (81817) (supersedes D-1900-2 (HOOV) (81817) for future procurement)	1	SN	
-16	AN3-3A	BOLT	3	FR	
-17	2W18-10	WASHER, Flat (NA) (89372)	3	FR	
-18	209-526135-1	CLAMP ASSEMBLY, Droop actuator support LH	1	FR	
	209-526135-2	CLAMP ASSEMBLY, Droop actuator support RH	1	FR	
	ATTACHING PARTS				
-19	AN364-428	NUT	2	FR	
-20	2W18-416	WASHER, Flat (NA) (89372)	2	FR	
-21	NAS334CPA7-5	BOLT	2	FR	
-22	AN364-428	NUT	1	FR	
-23	2W18-416	WASHER, Flat (NA) (89372)	1	FR	
-24	NAS334CPA7-5	BOLT	1	FR	
-25	AN364-428	NUT	1	FR	
-26	2W18-416	WASHER, Flat (NA) (89372)	1	FR	
-27	NAS334CPA11	BOLT	1	FR	
	---*---				
-28	AN365-1032	. NUT	1	FR	
-29	2W18-10M	. WASHER, Flat (NA) (89372)	2	FR	
-30	AN501-10-8	. SCREW	1	FR	
	AN253-3-150	. PIN	2	FR	
-31	209-526136-1	BRACKET ASSEMBLY, Outboard droop actuator LH	1	FR	
	209-526136-2	BRACKET ASSEMBLY, Outboard droop actuator RH	1	FR	
	209-526146	. PIN, Outboard droop leading edge actuator support guide	2	FR	
-32	AN364-428	NUT	2	FR	
-33	2W18-416	WASHER, Flat (NA) (89372)	2	FR	
-34	NAS334CPA10	BOLT	2	FR	
-35	AN364-428	NUT	2	FR	
-36	2W18-516	WASHER, Flat (NA) (89372)	2	FR	
-37	NAS335CPA14	BOLT	1	FR	
-38	NAS335CPA16	BOLT	1	FR	
-39	209-526138-1	SUPPORT, Outboard droop actuator LH	1	FR	
	209-526138-2	SUPPORT, Outboard droop actuator RH	1	FR	
-40	AN3-3A	BOLT	2	FR	
-41	2W18-10	WASHER, Flat (NA) (89372)	2	FR	
-42	9184Y-8-13/32	SHAFT ASSEMBLY (WDAB) (65301) (LH only)	1	FR	
	9184Y-8-17/32	SHAFT ASSEMBLY (WDAB) (65301) (RH only)	1	FR	
-43	9184Y-8-1/4 *1	SHAFT ASSEMBLY (WDAB) (65301)	1	PQ	
-44	209-526137-1 *1	BRACKET ASSEMBLY, Outboard droop control L-drive support LH	1	PQ	
	209-526137-2 *1	BRACKET ASSEMBLY, Outboard droop control L-drive support RH	1	PQ	
	AN4-10A	BOLT (inboard)	2	PQ	
	AN4-7A	BOLT (inboard)	2	PQ	
	2W18-10	WASHER, Flat (NA) (89372)	4	PQ	
	AN365-428	NUT	4	PQ	
-45	SK4760 *1	L-DRIVE ASSEMBLY (SFW) (57711)	1	PQ	
-46	AN365-1032	NUT	2	PQ	
-47	2W18-10	WASHER, Flat (NA) (89372)	4	PQ	
-48	AN3-6A	BOLT	2	PQ	
-49	9184Y-4-25/32	SHAFT ASSEMBLY (WDAB) (65301)	1	PQ	
-50	209-526139-1	BRACKET ASSEMBLY, Outboard droop control T-drive support LH	1	FR	
	209-526139-2	BRACKET ASSEMBLY, Outboard droop control T-drive support RH	1	FR	
-51	AN501-10-10	SCREW	4	FR	
-52	2W18-10	WASHER, Flat (NA) (89372)	4	FR	
-53	SK4755	T-ADAPTER ASSEMBLY (SFW) (57711)	1	FR	
-54	AN501-10-8	SCREW	2	FR	
-55	2W18-10	WASHER, Flat (NA) (89372)	2	FR	

OUTBOARD WING DROOP LEADING EDGE MECHANISM AND SUPPORT - APPLICABLE TO AIRCRAFT CODED (FR)

FIGURE & INDEX NO.	PART NUMBER	1 2 3 4 5 6 7	NOMENCLATURE	UNITS PER ASSY.	USABLE ON CODE	S/C NO.
173-56	209-526144		SHAFT ASSEMBLY, Outboard leading edge flap LH	1	FR	
	209-526144-11		SHAFT ASSEMBLY, Outboard leading edge flap RH	1	FR	
-57	209-526143		CONDUIT ASSEMBLY, Leading edge flexible shaft	1	FR	
-58	209-526141		BRACKET, Forward leading edge conduit	1	FR	
-59	209-526140		BRACKET, Rear leading edge conduit	1	FR	
-60	AN737TW46		CLAMP	1	FR	
-61	471T100-301		SCREW JACK, Wing leading edge flap (Talley Machine and Mfg Co) (98889) (superseded by 471T100-1 (Talley Machine and Mfg Co) (98889) for future procurement)	1	PN	505
-62	471T100-1		SCREW JACK, Wing leading edge flap (Talley Machine and Mfg Co) (98889) (supersedes 471T100-301 (Talley Machine and Mfg Co) (98889) for future procurement)	1	PP	505
-63	471119	.	FITTING, Machined tongue (Talley Machine and Mfg Co) (98889) (replacement for cast tongue fitting)	1	FR	
	USB-4Y	. .	BEARING, Spherical, nonmagnetic, Type I (Talley Machine and Mfg Co) (98889)	1	FR	
	471142-1	. .	PIN (Talley Machine and Mfg. Co) (98889)	1	FR	
-64	1N1B4		NUT, Aircraft castle (NA) (89372) (brass) (LH only)	1	FR	
	AN320-4		NUT (RH only)	1	FR	
	AN380C2-2		PIN (LH only)	1	FR	
	AN380-2-2		PIN (RH only)	1	FR	
-65	2W18-416M		WASHER, Flat (NA) (89372)	2	FR	
-66	209-52658-3		BOLT, Nonmagnetic (LH only)	1	FR	
	NAS464-4-12		BOLT (RH only)	1	FR	
-67	AN320C4		NUT (LH only)	1	FR	
	AN320-4		NUT (RH only)	1	FR	
	AN380C2-2		PIN (LH only)	1	FR	
	AN380-2-2		PIN (RH only)	1	FR	
-68	2W18-416		WASHER, Flat (NA) (89372) (LH only)	1	FR	
	2W18-416		WASHER, Flat (NA) (89372) (RH only)	1	FR	
-69	2W18-416M		WASHER, Flat (NA) (89372) (LH only) (use under bolthead)	1	FR	
	2W1AL1 7-16-16		WASHER, Plain (NA) (89372) (RH only) (use under bolthead)	1	FR	
-70	209-52658-15		BOLT, Nonmagnetic (LH only) (supersedes 209-52658-13 for future procurement)	1	FR	
	NAS464-4-16		BOLT (RH only)	1	FR	
-71	209-14509		SUPPORT, Wing 0% station 273.75 leading edge actuator	1	FR	
-72	AN363C428		NUT (nonmagnetic) (LH only)	2	FR	
	AN364-428		NUT (RH only)	2	FR	
-73	2W18-416M		WASHER, Flat (NA) (89372)	2	FR	
-74	NAS501-4-17		BOLT (nonmagnetic) (LH only)	2	FR	
	AN4-17A		BOLT (RH only)	2	FR	
-75	209-14510-3		FITTING, Outboard wing 0% station 273.75 leading edge actuator LH	1	FR	
	209-14510-4		FITTING, Outboard wing 0% station 273.75 leading edge actuator RH	1	FR	
-76	AN363C1032		NUT (nonmagnetic) (LH only)	6	FR	
	AN364-1032		NUT (RH only)	6	FR	
-77	2W18-10		WASHER, Flat (NA) (89372)	6	FR	
-78	7S27-10-16		SCREW, 100° flush head corrosion and heat resistant (NA) (89372) (LH only)	6	FR	
	AN509-10R16		BOLT (RH only)	6	FR	
-79	AN363C1032		NUT (nonmagnetic) (LH only)	6	FR	
	AN364-1032		NUT (RH only)	6	FR	
-80	2W18-10		WASHER, Flat (NA) (89372)	6	FR	
-81	7S27-10-16		SCREW, 100° flush head corrosion and heat resistant (NA) (89372) (LH only)	6	FR	
	AN509-10R16		SCREW (RH only)	6	FR	
-82	9184Y-14-7/16	*1	SHAFT ASSEMBLY (WDAB) (65301)	1	PR	
-83	209-526147-1	*1	CLIP, Droop leading edge LH	1	PR	
	209-526147-2	*1	CLIP, Droop leading edge RH	1	PR	
-84	AN3-3		BOLT	1	PR	
	2W18-10		WASHER, Flat (NA) (89372)	1	PR	
	AN364-1032		NUT	1	PR	
	MS21919D67		CLAMP	1	PR	

NOTE: *1 9184Y-14-7/16 (WDAB) (65301) together with 209-526147-1 and 209-526147-2 supersedes 9184Y-4-25/32 (WDAB) (65301) together with SK4760 (SFW) (57711) 9184Y-8-1/4 (WDAB) (65301) and 209-526137-1 or 209-526137-2 for future procurement

AILERON TRIM AND LOWERING MECHANISM - APPLICABLE TO AIRCRAFT CODED (ET)

FIGURE & INDEX NO.	PART NUMBER	1 2 3 4 5 6 7 NOMENCLATURE	UNITS PER ASSY.	USABLE ON CODE	S/C NO.
174-1	209-523125-11	BUNGEE ASSEMBLY, Aileron control artificial feel (supersedes 209-523125 which superseded 209-52350 for future procurement)	1	U	
	ATTACHING PARTS				
-2	NAS334PA20	BOLT	1	U	
	2W18-416	WASHER, Flat (NA) (89372)	1	U	
	AN364-428	NUT	1	U	
-3	AN174-23A	BOLT	1	U	
	4B21S4-102	BUSHING, Spacer (NA) (89372)	1	U	
	2W18-416M	WASHER, Flat (NA) (89372)	1	U	
	AN365-428	NUT	1	U	
	---*---				
-4	209-52378	. NUT, Aileron artificial feel bungee check	1	U	
-5	209-52357-11	. RETAINER ASSEMBLY, Aileron control artificial feel bungee	1	U	
-6	AN200KS4	. . BEARING	1	U	
-7	1N7-4A	. NUT, Check (NA) (89372)	2	U	
-8	209-523153	. PISTON, Aileron control artificial feel bungee	1	U	
-9	209-523133	. SPRING, Compression	1	U	
-10	209-523122-3	. PISTON, Aileron control artificial feel bungee	1	U	
-11	209-523123	. HOUSING, Aileron control artificial feel bungee	1	U	
-12	209-523121	. ROD ASSEMBLY, Aileron control artificial feel bungee	1	U	
-13	209-52060	. ROD END, Self aligning (make from RE4M6 (FAF) (21335)	1	U	
-14	1N7-6A	. NUT, Check (NA) (89372)	1	U	
-15	AN174-13A	BOLT	1	U	
	2W18-416M	WASHER, Flat (NA) (89372)	2	U	
	AN365-428	NUT	1	U	
-16	209-52314-21	ROD ASSEMBLY, Aileron control wing center section (supersedes 209-52314 for future procurement) (see figure 180 for breakdown)	1	U	
-17	209-52385	ROD ASSEMBLY, Aileron control lowering mechanism	1	U	
	ATTACHING PARTS				
-18	NAS334PA13	BOLT	2	U	
	2W18-416M	WASHER, Flat (NA) (89372)	4	U	
	AN365-428	NUT	2	U	
	---*---				
-19	RE4ML6	. ROD END (FAF) (21335)	1	U	
-20	1N7-6LA	. NUT, Check (NA) (89372)	1	U	
-21	209-52060	. ROD END, Self aligning (make from RE4M6 (FAF) (21335)	1	U	
-22	1N7-6A	. NUT, Check (NA) (89372)	1	U	
-23	209-52384	. ROD, Aileron control lowering mechanism	1	U	
-24	209-52380-1	DIFFERENTIAL ASSEMBLY, Aileron control lowering mechanism LH	1	U	
-25	209-52380-2	DIFFERENTIAL ASSEMBLY, Aileron control lowering mechanism RH	1	U	
-26	AN320-4	. NUT	1	U	
-27	2W18-416M	. WASHER, Flat (NA) (89372)	1	U	
-28	2W18-516M	. WASHER, Flat (NA) (89372)	2	U	
-29	209-52026	. BUSHING, Aileron control lowering mechanism	2	U	
-30	NAS334-16	. BOLT	1	U	
-31	AN365-428	. NUT	2	U	
-32	2W18-416M	. WASHER, Flat (NA) (89372)	2	U	
-33	NAS334A34	. BOLT	2	U	
-34	209-52372	. BLOCK, Aileron control lowering mechanism spacer (supersedes 209-52388 for future procurement)	1	U	
-35	209-523112	. LINK, Actuator replacement aileron nondrooping	1	U	
-36	AN320-4	. NUT	1	U	
-37	2W18-416M	. WASHER, Flat (NA) (89372)	1	U	
-38	4B21S4-011	. BUSHING, Spacer (NA) (89372)	1	U	
-39	NAS334-7	. BOLT	1	U	
-40	209-52386-1	. ARM, Aileron control lowering mechanism forward LH	1	U	
	209-52386-2	. ARM, Aileron control lowering mechanism forward RH	1	U	
-41	209-52381-1	. PLATE ASSEMBLY, Aileron control lowering mechanism LH	1	U	
	209-52381-2	. PLATE ASSEMBLY, Aileron control lowering mechanism RH	1	U	
-42	4B20S6-008	. . BUSHING, Press fit flanged (NA) (89372)	1	U	
-43	4B20B6-008	. . BUSHING, Press fit flanged (NA) (89372)	1	U	
-44	AN310-4	. NUT	1	U	
-45	2W18-416M	. WASHER, Flat (NA) (89372)	1	U	
-46	4B21S4-112	. BUSHING, Spacer (NA) (89372)	1	U	
-47	NAS334-17	. BOLT	1	U	
-48	209-52383-1	. ARM, Aileron control lowering mechanism LH	1	U	
	209-52383-2	. ARM, Aileron control lowering mechanism RH	1	U	
-49	209-52382	. SUPPORT ASSEMBLY, Aileron control lowering mechanism LH	1	U	
	209-52387	. SUPPORT ASSEMBLY, Aileron control lowering mechanism RH	1	U	
-50	4B20B6-008	. BUSHING, Press fit flanged (NA) (89372)	1	U	
-51	4B20S6-109	. BUSHING, Press fit flanged (NA) (89372)	1	U	
-52	NAS464-4A59	BOLT	1	U	
	2W18-416M	WASHER, Flat (NA) (89372)	2	U	
	AN364-428	NUT	1	U	
-53	209-52311	SUPPORT ASSEMBLY, Aileron control lowering mechanism	1	U	
	AN201KP4A	. BEARING	4	U	
-54	NAS464-4A13	BOLT	1	U	
	2W18-416M	WASHER, Flat (NA) (89372)	2	U	
	AN364-428	NUT	1	U	
-55	AN174-25A	BOLT	1	U	
	2W18-416	WASHER, Flat (NA) (89372)	2	U	
	AN365-428	NUT	1	U	
-56	209-52349-11	BELLCRANK ASSEMBLY, Aileron control artificial feel bungee	1	U	

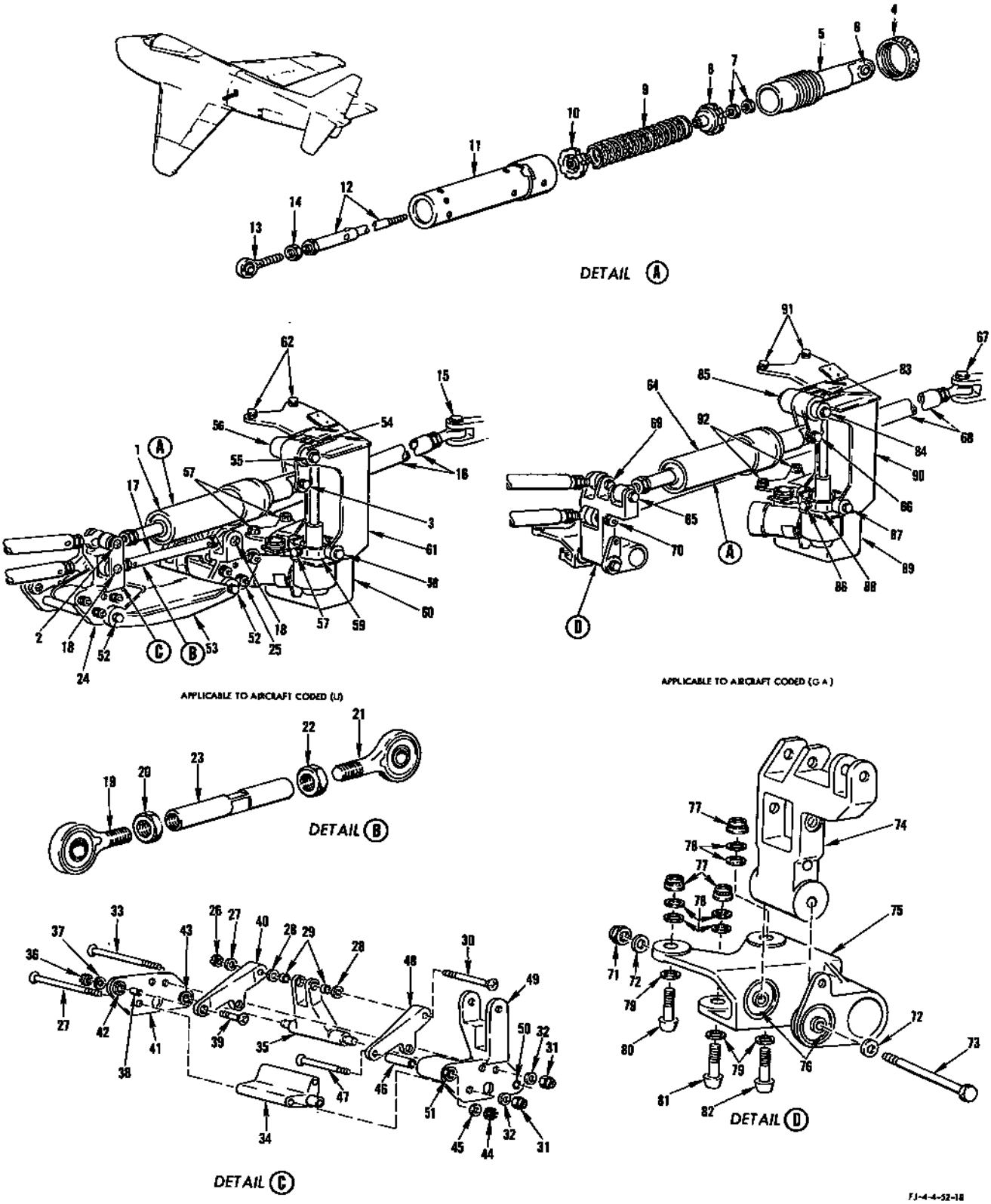

FIGURE 174 - AILERON TRIM AND LOWERING MECHANISM - APPLICABLE TO AIRCRAFT CODED (ET)

AILERON TRIM AND LOWERING MECHANISM - APPLICABLE TO AIRCRAFT CODED (ET)

FIGURE & INDEX NO.	PART NUMBER	1 2 3 4 5 6 7 NOMENCLATURE	UNITS PER ASSY.	USABLE ON CODE	S/C NO.
174	AN201KP4A	. BEARING	2	U	
	4S7-4-0.883	. SPACER, Flanged dual bearing (NA) (89372)	1	U	
-57	NAS464-4A5	BOLT	2	U	
	4B21B4-005	BUSHING, Spacer (NA) (89372)	2	U	
	2W18-416M	WASHER, Flat (NA) (89372)	4	U	
	AN364-428	NUT	2	U	
-58	NAS464-4A7	BOLT	2	U	
	4B21B4-005	BUSHING, Spacer (NA) (89372)	2	U	
	2W18-416M	WASHER, Flat (NA) (89372)	4	U	
	AN364-428	NUT	2	U	
-59	165-523183	GIMBAL, Aileron control artificial feel trim unit	1	U	
-60	31586-2	TRIM ACTUATOR (AIR) (99193)	1	U	
-61	209-52317	BRACKET, Aileron control artificial feel bungee	1	U	
-62	MS20004-15	BOLT (upper)	2	U	
	2W18-416	WASHER, Flat (NA) (89372)	2	U	
	2W10-4	WASHER, Countersunk (NA) (89372)	2	U	
	EB-048	NUT (EN) (72962)	2	U	
-63	MS20004-20	BOLT (lower)	2	U	
	2W18-416	WASHER, Flat (NA) (89372)	2	U	
	2W10-4	WASHER, Countersunk (NA) (89372)	2	U	
	EB-048	NUT (EN) (72962)	2	U	
-64	209-523125-11	BUNGEE ASSEMBLY, Aileron control artificial feel (supersedes 209-523125 which superseded 209-52350 for future procurement)	1	GA	
-65	NAS464-4A15	BOLT	1	GA	
	2W18-416M	WASHER, Flat (NA) (89372)	2	GA	
	AN364-428	NUT	1	GA	
-66	AN174-26A	BOLT	1	GA	
	2W18-416M	WASHER, Flat (NA) (89372)	1	GA	
	4B21S4-114	BUSHING, Spacer (NA) (89372)	1	GA	
	AN365-428	NUT	1	GA	
-67	AN174-13A	BOLT	1	GA	
	2W18-416M	WASHER, Flat (NA) (89372)	2	GA	
	AN365-426	NUT	1	GA	
-68	209-523115	ROD ASSEMBLY, Aileron control wing center section RH (see figure 180 for breakdown)	1	GA	
-69	NAS464-4A13	BOLT	1	GA	
	2W18-416M	WASHER, Flat (NA) (89372)	2	GA	
	AN364-428	NUT	1	GA	
-70	NAS464-4A22	BOLT	1	GA	
	2W18-416M	WASHER, Flat (NA) (89372)	2	GA	
	AN364-428	NUT	1	GA	
-71	AN364-428	NUT	1	GA	
-72	2W18-416M	WASHER, Flat (NA) (89372)	2	GA	
-73	NAS464-4A30	BOLT	1	GA	
-74	209-523128-3	BELLCRANK, Aileron flight control wing center section (supersedes 209-523118 for future procurement)	1	GA	
-75	209-523127	SUPPORT ASSEMBLY, Aileron control lowering mechanism	1	GA	
-76	AN201KP4A	. BEARING	2	GA	
-77	EB-064	NUT (EN) (72962)	3	GA	
-78	2W18-616	WASHER, Flat (NA) (89372)	6	GA	
-79	2W10-6	WASHER, Countersunk (NA) (89372)	3	GA	
-80	MS20004-28	BOLT	1	GA	
-81	MS20004-32	BOLT	1	GA	
-82	MS20004-34	BOLT	1	GA	
-83	NAS464-4A13	BOLT	1	GA	
	2W18-416M	WASHER, Flat (NA) (89372)	2	GA	
	AN364-428	NUT	1	GA	
-84	AN174-25A	BOLT	1	GA	
	2W18-416	WASHER, Flat (NA) (89372)	2	GA	
	AN365-428	NUT	1	GA	
-85	209-523130-11	BELLCRANK ASSEMBLY, Aileron control artificial feel bungee (supersedes 209-523124 for future procurement)	1	GA	
	AN201KP4A	. BEARING	2	GA	
	4S7-4-0.883	. SPACER, Flanged dual bearing (NA) (89372)	1	GA	
-86	NAS464-4A5	BOLT	2	GA	
	2W18-416M	WASHER, Flat (NA) (89372)	4	GA	
	4B21B4-005	BUSHING, Spacer (NA) (89372)	2	GA	
	AN364-428	NUT	2	GA	
-87	NAS464-4A7	BOLT	2	GA	
	2W18-416M	WASHER, Flat (NA) (89372)	4	GA	
	4B21B4-005	BUSHING, Spacer (NA) (89372)	2	GA	
	AN364-428	NUT	2	GA	
-88	165-523183	GIMBAL, Aileron control artificial feel trim unit	1	GA	
-89	31586-2	TRIM ACTUATOR (AIR) (99193)	1	GA	
-90	209-52317	BRACKET, Aileron control artificial feel bungee	1	GA	
-91	MS20004-15	BOLT (upper)	2	GA	
	2W18-416	WASHER, Flat (NA) (89372)	2	GA	
	2W10-4	WASHER, Countersunk (NA) (89372)	2	GA	
	EB-048	NUT (EN) (72962)	2	GA	
-92	MS20004-20	BOLT (lower)	2	GA	
	2W18-416	WASHER, Flat (NA) (89372)	2	GA	
	2W10-4	WASHER, Countersunk (NA) (89372)	2	GA	
	EB-048	NUT (EN) (72962)	2	GA	

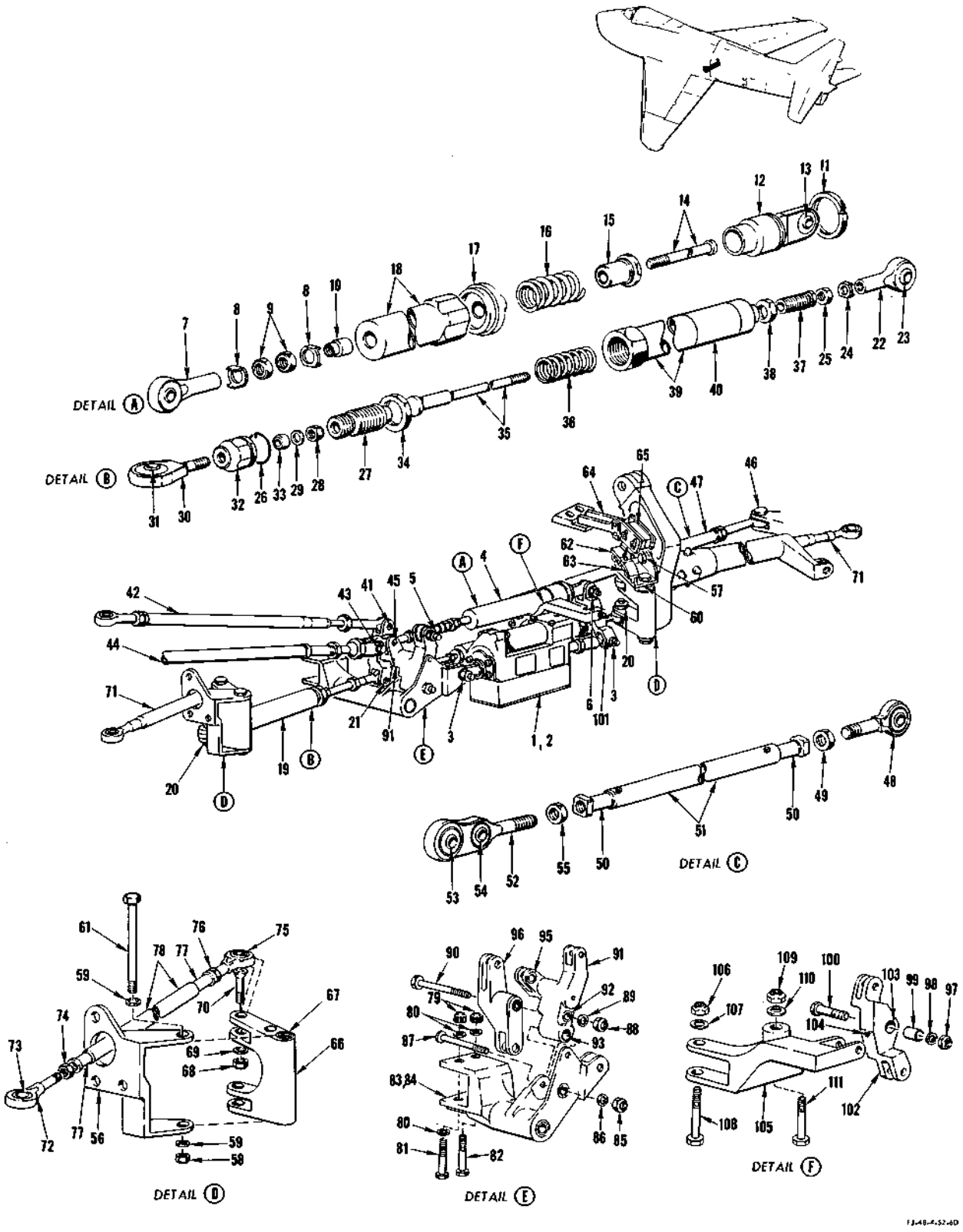

FIGURE 175 - AILERON TRIM AND FLAP SPOILER CONTROL MECHANISM (FUSELAGE SECTION) - APPLICABLE TO AIRCRAFT CODED (FR)

AILERON TRIM AND FLAP SPOILER CONTROL MECHANISM (FUSELAGE SECTION) - APPLICABLE TO AIRCRAFT CODED (FR)

FIGURE & INDEX NO.	PART NUMBER	1 2 3 4 5 6 7 NOMENCLATURE	UNITS PER ASSY.	USABLE ON CODE	S/C NO.
175-1	209-54750	ACTUATOR ASSEMBLY, Aileron bungee trim low rate (superseded by 525202 (AIR) (99193) for future procurement)	1	RQ	
-2	525202	ACTUATOR ASSEMBLY, Aileron bungee trim (AIR) (99193) (see Electrical and Instrument for complete breakdown) (supersedes 209-54750 for future procurement)	1	RR	
-3	AN174-12	BOLT	2	FR	
	2W18-416	WASHER, Flat (NA) (89372)	4	FR	
	AN310-4	NUT	2	FR	
-4	209-523168	BUNGEE ASSEMBLY, Aileron artificial feel	1	FR	
	ATTACHING PARTS				
-5	AN174-13	BOLT	1	FR	
	2W18-416M	WASHER, Flat (NA) (89372) (use under bolthead)	1	FR	
	2W18-416	WASHER, Flat (NA) (89372) (use under nut)	1	FR	
	AN310-4	NUT	1	FR	
-6	AN174-11	BOLT	1	FR	
	2W18-416	WASHER, Flat (NA) (89372)	2	FR	
	AN310-4	NUT	1	FR	
	---*---				
-7	RE4F5	. ROD END (FAF) (21335)	1	FR	
-8	2W15-5A	. WASHER, Lock (NA) (89372)	2	FR	
-9	1N7-5A	. NUT, Check (NA) (89372)	2	FR	
-10	209-523175	. SPACER, Aileron control artificial feel bungee	1	FR	
-11	1N6-20A	. NUT, Cylinder lock (NA) (89372)	1	FR	
-12	209-523170	. CAP, Aileron control artificial feel bungee retainer assembly of	1	FR	
-13	KS4A	. . BEARING (FAF) (21335)	1	FR	
-14	209-523174	. ROD, Aileron artificial feel bungee	1	FR	
-15	209-523171	. PISTON, Aileron control artificial feel bungee	1	FR	
-16	209-523177	. SPRING, Close tolerance compression	1	FR	
-17	209-523172	. PISTON, Aileron control artificial feel bungee forward	1	FR	
-18	209-523169	. CYLINDER, Aileron control artificial feel bungee	1	FR	
-19	209-523310-11	BUNGEE ASSEMBLY, Spoiler control	2	FR	
	ATTACHING PARTS				
-20	AN174-11A	BOLT	2	FR	
	2W18-416M	WASHER, Flat (NA) (89372)	4	FR	
	AN365-428	NUT	2	FR	
-21	NAS334CPA12	BOLT	1	FR	
	2W18-416M	WASHER, Flat (NA) (89372)	1	FR	
	AN365-428	NUT	1	FR	
	---*---				
-22	209-523311	. ROD END, Spoiler control bungee	1	FR	
-23	KS4A	. . BEARING (FAF) (21335)	1	FR	
-24	2W15-5	. WASHER, Lock (NA) (89372)	1	FR	
-25	1N7-5A	. NUT, Check (NA) (89372)	1	FR	
	209-523313	. SWIVEL, Spoiler control bungee assembly of	1	FR	
-26	AN996-18	. . RING	1	FR	
-27	209-523312	. . RETAINER, Spoiler control bungee swivel	1	FR	
-28	AN310-4	. . NUT	1	FR	
-29	2W18-416	. . WASHER, Flat (NA) (89372)	1	FR	
-30	140-52302	. . BEARING ASSEMBLY, Aileron control link swivel	1	FR	
-31	AN200KS4	. . . BEARING	1	FR	
-32	140-52303	. . RETAINER, Aileron control link swivel bearing	1	FR	
-33	AN207DPP4	. . BEARING	1	FR	
-34	1N6-18A	. NUT, Check (NA) (89372)	1	FR	
-35	209-523317-5	. ROD, Spoiler control bungee	1	FR	
-36	209-523385	. SPRING, Close tolerance compression	1	FR	
-37	209-523315	. STOP, Spoiler control bungee	1	FR	
-38	1N7-9A	. NUT, Check (NA) (89372)	1	FR	
-39	209-523314	. CYLINDER, Spoiler control bungee	1	FR	
-40	209-523362-3	. DECAL, Spoiler control bungee	1	FR	
-41	7S29-416A9	SCREW, Shear 100° flush hi-shear head close tolerance (NA) (89372)	1	FR	
	2W18-416M	WASHER, Flat (NA) (89372)	1	FR	
	AN364-428	NUT	1	FR	
-42	209-523164	ROD, Aileron control fuselage to wing center section assembly of (see figure 180 for continuation)	1	FR	
-43	NAS334CPA12	BOLT	1	FR	
	2W18-416	WASHER, Flat (NA) (89372)	2	FR	
	AN365-4	NUT	1	FR	
-44	209-523178	ROD ASSEMBLY, Aileron control wing center section to wing LH (see figure 180 for continuation)	1	FR	
-45	NAS334CPA11	BOLT	1	FR	
	2W18-416	WASHER, Flat (NA) (89372)	1	FR	
	AN365-4	NUT	1	FR	
-46	AN174-13A	BOLT	1	FR	
	2W18-416M	WASHER, Flat (NA) (89372)	2	FR	
	AN365-428	NUT	1	FR	
-47	209-523163	ROD, Aileron control wing center section RH assembly of	1	FR	
	209-523163-31	. ROD SUBASSEMBLY, Aileron control wing center section RH assembly of	1	FR	
-48	MR-4	. . ROD END (SHA) (77896)	1	FR	
-49	AN316-6R	. . NUT	1	FR	
-50	209-52040-5	. . ROD END, Female threaded riveting	2	FR	
-51	209-523163-3	. . TUBE, Aileron control wing center section RH assembly of rod subassembly	1	FR	
-52	209-523185	. ROD END, Aileron wing center section assembly of	1	FR	

AILERON TRIM AND FLAP SPOILER CONTROL MECHANISM (FUSELAGE SECTION) - APPLICABLE TO AIRCRAFT CODED (FR)

FIGURE & INDEX NO.	PART NUMBER	1 2 3 4 5 6 7 NOMENCLATURE	UNITS PER ASSY.	USABLE ON CODE	S/C NO.
175-53	B-4	. . BEARING (SHA) (77896)	1	FR	
-54	KS4A	. . BEARING (FAF) (21335)	1	FR	
-55	AN316-6R	. NUT	1	FR	
-56	209-523321-1	SUPPORT, Spoiler control bellcrank flap horn LH (see Inbd Wing - Structure)	1	FR	
	209-523321-2	SUPPORT, Spoiler control bellcrank flap horn RH (see Inbd Wing - Structure)	1	FR	
	ATTACHING PARTS				
-57	AN174-7A	BOLT (upper)	1	FR	
	AN174-7A	BOLT (lower forward bolt)	1	FR	
	AN174-5A	BOLT (lower aft bolt)	1	FR	
	2W18-416M	WASHER, Flat (NA) (89372)	3	FR	
	---*---				
-58	AN364-428	NUT	1	FR	
-59	2W18-416M	WASHER, Flat (NA) (89372)	2	FR	
-60	209-54744	SUPPORT, Intermediate flap position cam (RH side only)	1	FR	
-61	NAS464P4A60	BOLT	1	FR	
-62	209-54742	CAM, Intermediate flap position indicating dual (forward)	1	FR	
-63	209-54743	CAM, Intermediate flap position indicating single (aft)	1	FR	
	ATTACHING PARTS				
	AN515-6R12	SCREW	4	FR	
	2W18-6	WASHER, Flat (NA) (89372)	8	FR	
	AN364-632	NUT	4	FR	
	---*---				
-64	209-54748	SUPPORT, Intermediate flap switch assembly of	1	FR	
-65	1HS57	SWITCH (MCS) (91929)	2	FR	
	ATTACHING PARTS.				
	AN515-6R30	SCREW	2	FR	
	2W18-6	WASHER, Flat (NA) (89372)	4	FR	
	AN364-632	NUT	2	FR	
	---*---				
-66	209-523320-1	BELLCRANK, Spoiler control wing center section flap assembly of LH (interchangeable with and superseded by 209-523358-11 for future procurement)	1	NJ	
	209-523358-11	BELLCRANK, Spoiler control wing center section flap assembly of LH (interchangeable with and supersedes 209-523320-1 for future procurement)	1	NK	
	209-523320-2	BELLCRANK, Spoiler control wing center section flap assembly of RH (interchangeable with and superseded by 209-523358-12 for future procurement)	1	NJ	
	209-523358-12	BELLCRANK, Spoiler control wing center section flap assembly of RH (interchangeable with and supersedes 209-523320-2 for future procurement)	1	NK	
-67	AN201KP4A	. BEARING	2	FR	
	4S7-4-2.578	. SPACER, Flanged dual bearing (NA) (89372)	1	FR	
-68	AN365-428	NUT	1	FR	
-69	2W18-416M	WASHER, Flat (NA) (89372)	1	FR	
-70	NAS334CPA12	BOLT	1	FR	
-71	244-52027	ROD, Spoiler control assembly of (supersedes 209-523324 for future procurement)	2	FR	
	244-52026	. ROD END, Spoiler control assembly of	1	FR	
-72	244-52026-3	. . ROD END SUBASSEMBLY, Spoiler control	1	FR	
-73	KS4A	. . BEARING (FAF) (21335)	1	FR	
-74	AN316-6R	. NUT	1	FR	
	244-52027-11	. ROD SUBASSEMBLY, Spoiler control	1	FR	
-75	RE4M6	. . ROD END (FAF) (21335)	1	FR	
-76	AN316-6R	. . NUT	1	FR	
-77	209-52040-7	. . ROD END, Female threaded riveting	2	FR	
-78	244-52027-3	. . TUBE, Spoiler control rod subassembly	1	FR	
-79	EB-064	NUT (EN) (72962)	2	FR	
-80	2W18-616	WASHER, Flat (NA) (89372)	3	FR	
-81	MS20006-36	BOLT	1	FR	
-82	NAS336CPA27	BOLT	1	FR	
-83	209-523157	SUPPORT, Aileron and spoiler control bellcrank wing center section (interchangeable with and superseded by 209-523180 for future procurement)	1	RN	
-84	209-523180	SUPPORT, Aileron and spoiler control bellcrank wing center section (interchangeable with and supersedes 209-523157 for future procurement)	1	LD	
-85	AN365-428	NUT	1	FR	
-86	2W18-416M	WASHER, Flat (NA) (89372)	1	FR	
-87	NAS334CPA24	BOLT	1	FR	
-88	AN364-6	NUT	1	FR	
-89	2W18-616	WASHER, Flat (NA) (89372)	1	FR	
-90	NAS464P6A37	BOLT	1	FR	
-91	209-523377	BELLCRANK, Aileron control wing center section assembly of	1	FR	
-92	209-523377-3	. BELLCRANK SUBASSEMBLY, Aileron control wing center section	1	FR	
-93	AN201KP4A	. BEARING	2	FR	
	4S7-4-0.828	. SPACER, Flanged dual bearing (NA) (89372)	1	FR	
-94	AN201KP6A	. BEARING	2	FR	
	4S7-9-0.723	. SPACER, Flanged dual bearing (NA) (89372)	1	FR	
-95	4B20B4-008	. BUSHING, Press fit flanged (NA) (89372)	1	FR	
	4B20B4-005	. BUSHING, Press fit flanged (NA) (89372)	1	FR	
-96	209-523378	BELLCRANK, Aileron control wing center	1	FR	
-97	AN310-4	NUT	1	FR	

AILERON TRIM AND FLAP SPOILER CONTROL MECHANISM (FUSELAGE SECTION) - APPLICABLE TO AIRCRAFT CODED (FR)

FIGURE & INDEX NO.	PART NUMBER	1 2 3 4 5 6 7 NOMENCLATURE	UNITS PER ASSY.	USABLE ON CODE	S/C NO.
175-98	2W18-416	WASHER, Flat (NA) (89372)	2	FR	
-99	4B2M-S4-027	BUSHING, Spacer (NA) (89372)	1	FR	
-100	AN174-16	BOLT	1	FR	
-101	209-523167	BELLCRANK, Aileron bungee trim assembly of (interchangeable with and superseded by 209-523182-11 for future procurement)	1	NJ	
	209-523182-11	BELLCRANK, Aileron bungee trim assembly of (interchangeable with and supersedes 209-523167 for future procurement)	1	NK	
-102	209-523167-3	. BELLCRANK SUBASSEMBLY, Aileron bungee trim	1	NJ	
	209-523182-3	. BELLCRANK SUBASSEMBLY, Aileron bungee trim	1	NK	
-103	4B20M-S6-006	. BUSHING, Press fit flanged (NA) (89372)	2	FR	
-104	NAS516-1	. FITTING, Lubricator	1	FR	
-105	209-523166	SUPPORT, Aileron bungee trim bellcrank (interchangeable with and superseded by 209-523184 for future procurement)	1	NJ	
	209-523184	SUPPORT, Aileron bungee bellcrank (interchangeable with and supersedes 209-523166 for future procurement)	1	NK	
-106	EB-064	NUT (EN) (72962)	1	FR	
-107	2W18-616	WASHER, Flat (NA) (89372)	1	FR	
-108	MS20006-29	BOLT	1	FR	
-109	EB-048	NUT (EN) (72962)	1	FR	
-110	2W18-416	WASHER, Flat (NA) (89372)	1	FR	
-111	MS20004-29	BOLT	1	FR	

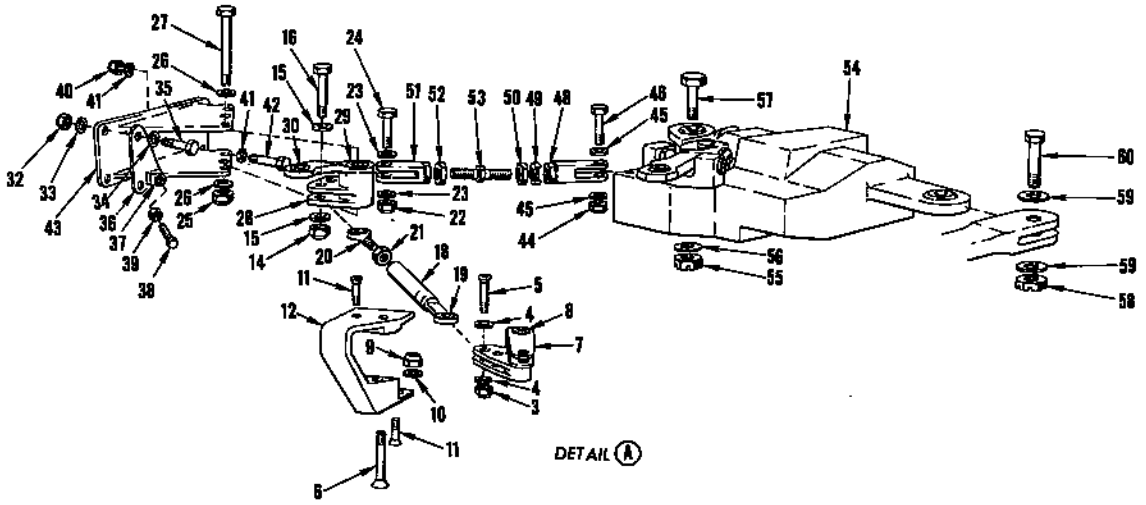

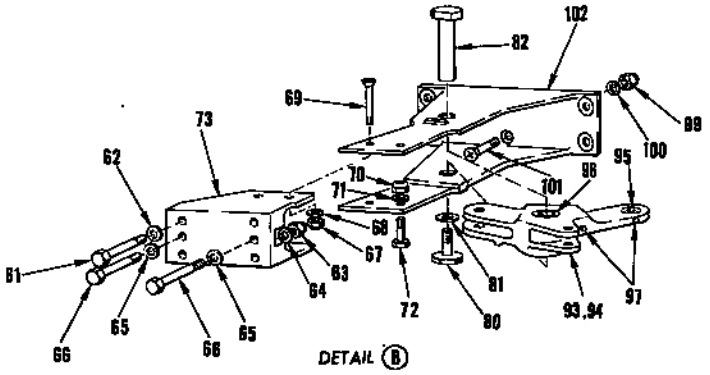

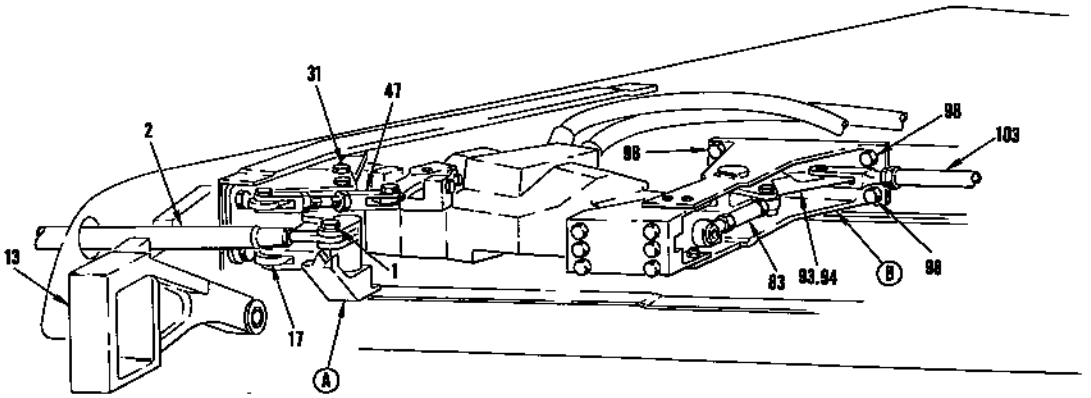

FIGURE 176 - WING FLAP SPOILERS CONTROL MECHANISM (WING SECTION) - APPLICABLE TO AIRCRAFT CODED (FR) (SHEET 1)

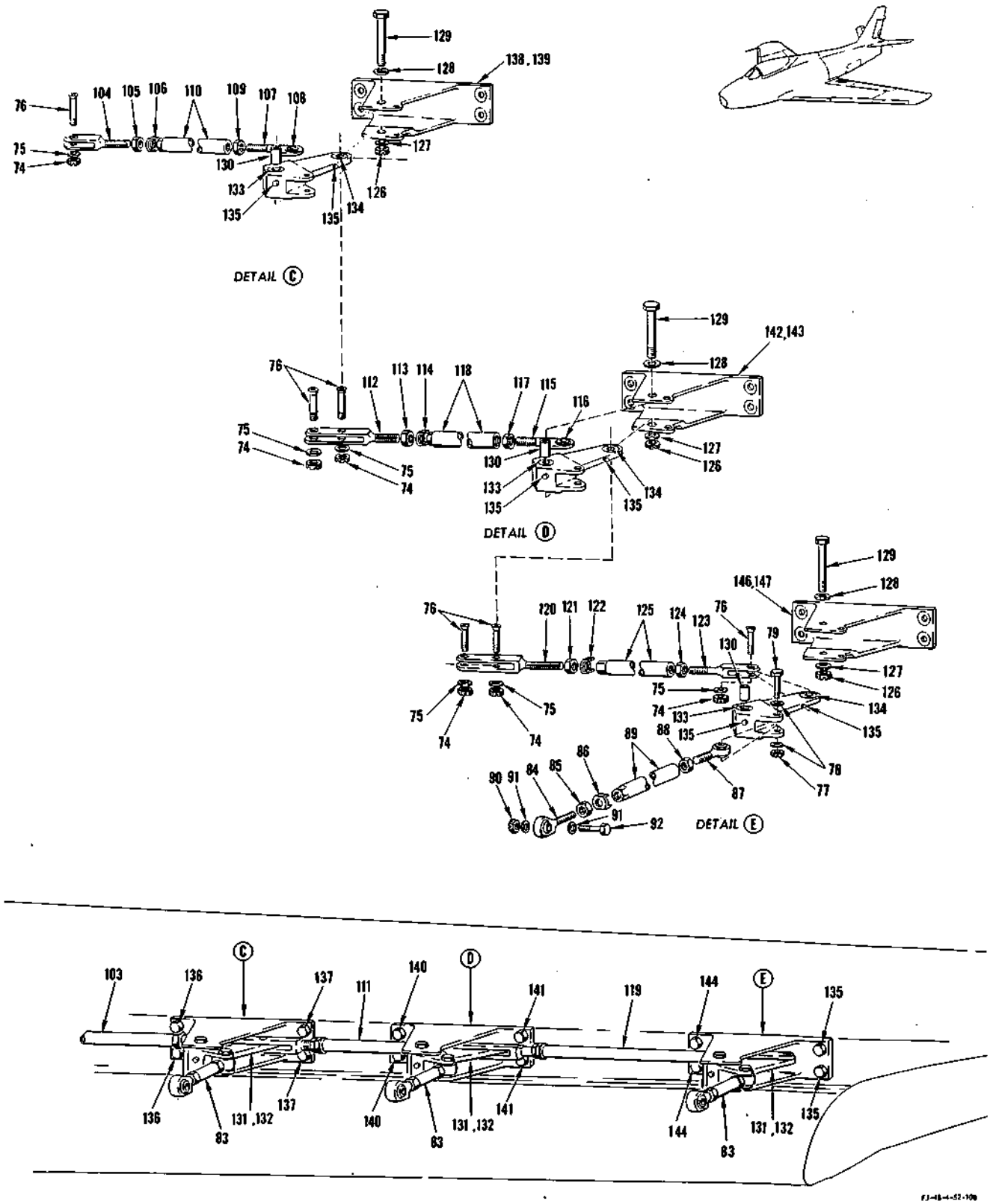

FIGURE 176 - WING FLAP SPOILERS CONTROL MECHANISM (WING SECTION) - APPLICABLE TO AIRCRAFT CODED (FR) (SHEET 2)

WING FLAP SPOILERS CONTROL MECHANISM (WING SECTION) - APPLICABLE TO AIRCRAFT CODED (FR)

FIGURE & INDEX NO.	PART NUMBER	1 2 3 4 5 6 7 NOMENCLATURE	UNITS PER ASSY.	USABLE ON CODE	S/C NO.
176-1	NAS464R4A10	BOLT	1	FR	
	2W18-416M	WASHER, Flat (NA) (89372)	2	FR	
	AN365-428	NUT	1	FR	
-2	244-52027	ROD, Spoiler control assembly of (supersedes 209-523324 for future procurement) (see figure 175 for breakdown)	1	FR	
-3	AN365-428	NUT	1	FR	
-4	2W18-416	WASHER, Flat (NA) (89372)	2	FR	
-5	NAS334CPA10	BOLT	1	FR	
-6	NAS334CPA30	BOLT	1	FR	
-7	209-523326-1	BELLCRANK, Spoiler actuator control assembly of LH	1	FR	
	209-523326-2	BELLCRANK, Spoiler actuator control assembly of RH	1	FR	
-8	AN201KP4A	. BEARING	2	FR	
	4S7-4-1.078	. SPACER, Flanged dual bearing (NA) (89372)	1	FR	
-9	AN365-1032	NUT	2	FR	
-10	2W18-10	WASHER, Flat (NA) (89372)	2	FR	
-11	AN509-10R17	SCREW	4	FR	
-12	209-523327-1	BRACKET, Spoiler actuator control forward assembly of LH	1	FR	
	209-523327-2	BRACKET, Spoiler actuator control forward assembly of RH			
	RL28SB-8	. RING (ROSN) (83324)	1	FR	
	RD206SC-6.5L	. INSERT (ROSN) (83324)	1	FR	
-13	209-14432-11	SUPPORT ASSEMBLY, Inboard wing trailing edge station 37.825 LH (see Inbd Wing - Structure)	1	FR	
-14	AN365-428	NUT	1	FR	
-15	2W18-416M	WASHER, Flat (NA) (89372)	2	FR	
-16	NAS334CPA13	BOLT	1	FR	
-17	209-523328	ROD ASSEMBLY, Spoiler actuator control inboard	2	FR	
-18	209-523329	. ROD, Spoiler actuator control inboard assembly of	1	FR	
-19	KS4A	. . BEARING (FAF) (21335)	1	FR	
-20	RE4M6	. ROD END (FAF) (21335)	1	FR	
-21	AN316-6	. NUT	1	FR	
-22	AN364-428	NUT	1	FR	
-23	2W18-416M	WASHER, Flat (NA) (89372)	2	FR	
-24	NAS464P4A9	BOLT	1	FR	
-25	AN364-428	NUT	1	FR	
-26	2W18-416M	WASHER, Flat (NA) (89372)	2	FR	
-27	NAS46-4-36	BOLT	1	FR	
-28	209-523332-1	BELLCRANK, Spoiler actuator control assembly of LH	1	FR	
	209-523332-2	BELLCRANK, Spoiler actuator control assembly of RH	1	FR	
-29	AN201KP4A	. BEARING	2	FR	
	4S7-4-1.158	. SPACER, Flanged dual bearing (NA) (89372)	1	FR	
-30	KS4A	. BEARING (FAF) (21335)	2	FR	
-31	AN174-25	BOLT	1	FR	
	2W18-416M	WASHER, Flat (NA) (89372)	2	FR	
	4B21S4-123	BUSHING, Spacer (NA) (89372)	1	FR	
	AN320-4	NUT	1	FR	
-32	AN365-624	NUT	2	FR	
-33	2W18-616	WASHER, Flat (NA) (89372)	2	FR	
-34	2W18-616M	WASHER, Flat (NA) (89372)	2	FR	
-35	AN176-15A	BOLT	2	FR	
-36	209-523330-1	FITTING, Spoiler control stop assembly of LH	1	FR	
	209-523330-2	FITTING, Spoiler control stop assembly of RH	1	FR	
-37	1191-4CNx-3/8	. INSERT, Heli-coil (AF) (91767)	1	FR	
-38	5B2-6DH	BOLT, Adjustment (NA) (89372)	1	FR	
-39	1N7-4A	NUT, Check (NA) (89372)	1	FR	
-40	AN365-624	NUT	2	FR	
-41	2W18-616M	WASHER, Flat (NA) (89372)	4	FR	
-42	AN176-12A	BOLT	2	FR	
-43	209-523333-1	BRACKET, Spoiler actuator control aft LH	1	FR	
	209-523333-2	BRACKET, Spoiler actuator control aft RH	1	FR	
-44	AN365-428	NUT	1	FR	
-45	2W18-416M	WASHER, Flat (NA) (89372)	2	FR	
-46	AN174-10A	BOLT	1	FR	
-47	209-523334	ROD ASSEMBLY, Spoiler actuator control outboard	1	FR	
-48	209-523336-1	. CLEVIS, Spoiler actuator control outboard LH	1	FR	
-49	2W15-5	. WASHER, Lock (NA) (89372)	1	FR	
-50	AN316-5	. NUT	1	FR	
-51	209-523336-2	. CLEVIS, Spoiler actuator control outboard RH	1	FR	
-52	1N7-51A	. NUT, Check (NA) (89372)	1	FR	
-53	209-523335	. ROD, Spoiler actuator control outboard	1	FR	
-54	209-587183	ACTUATOR ASSEMBLY, Hydraulic flight control spoiler (see Hydraulic System)	1	FR	
-55	AN320-4	NUT	1	FR	
-56	2W1AL17-24-63	WASHER, Plain (NA) (89372)	1	FR	
-57	209-587194	BOLT, Hydraulic flight control spoiler 7/16 diameter	1	FR	
-58	AN320-7	NUT	1	FR	
-59	2W18-716M	WASHER, Flat (NA) (89372)	2	FR	
-60	209-523316	BOLT, Spoiler actuator	1	FR	
-61	AN174H4A	BOLT	4	FR	
-62	2W18-416M	WASHER, Flat (NA) (89372)	4	FR	
-63	AN365-428	NUT	2	FR	
-64	2W18-416	WASHER, Flat (NA) (89372)	2	FR	
-65	2W18-416M	WASHER, Flat (NA) (89372)	2	FR	
-66	AN174-12A	BOLT	2	FR	

WING FLAP SPOILERS CONTROL MECHANISM (WING SECTION) - APPLICABLE TO AIRCRAFT CODED (FR)

FIGURE & INDEX NO.	PART NUMBER	1 2 3 4 5 6 7 NOMENCLATURE	UNITS PER ASSY.	USABLE ON CODE	S/C NO.
176-67	AN364-524	NUT	2	FR	
-68	2W18-516M	WASHER; Flat (NA) (89372)	2	FR	
-69	7S29-516-6	SCREW, Shear 100° flush hi-shear head close tolerance (NA) (89372)	2	FR	
-70	AN320-5	NUT	2	FR	
-71	2W18-516M	WASHER, Flat (NA) (89372)	4	FR	
-72	NAS464P5-7	BOLT	2	FR	
-73	209-523354-1	BRACKET, Spoiler control inboard forward LH	1	FR	
	209-523354-2	BRACKET, Spoiler control inboard forward RH	1	FR	
-74	AN320-4	NUT	6	FR	
-75	2W18-416M	WASHER, Flat (NA) (89372)	6	FR	
-76	7S29-416-10	SCREW, Sheal 100° flush hi-shear head close tolerance (NA) (89372)	6	FR	
-77	AN320-4	NUT	4	FR	
-78	2W18-416M	WASHER, Flat (NA) (89372)	8	FR	
-79	NAS464P4-15	BOLT	4	FR	
-80	209-523340	BOLT, Spoiler control	1	FR	
-81	2W1AL17-34-32	WASHER, Plain (NA) (89372)	1	FR	
-82	209-523339	BOLT, Spoiler control inboard	1	FR	
-83	209-523341	ROD ASSEMBLY, Spoiler control forward	4	FR	
-84	209-523343	. ROD END, Spoiler control forward	1	FR	
-85	1N7-6A	. NUT, Check (NA) (89372)	1	FR	
-86	2W15-6	. WASHER, Lock (NA) (89372)	1	FR	
-87	HEL-4FN	. ROD END (HLF) (97613)	1	FR	
-88	AN316-6L	. NUT	1	FR	
-89	209-523342	. ROD, Spoiler control forward	1	FR	
-90	AN320-4	NUT	1	FR	
-91	2W18-416M	WASHER, Flat (NA) (89372)	2	FR	
-92	NAS464P4-16	BOLT	1	FR	
-93	209-52338-1	BELLCRANK, Spoiler control inboard assembly of LH (superseded by 209-523361-11 for future procurement) (209-52338-1 not to be used for replacement on any aircraft)	1	HJ	
	209-52338-2	BELLCRANK, Spoiler control inboard assembly of RH (superseded by 209-523361-12 for future procurement) (209-52338-2 not to be used for replacement on any aircraft)	1	HJ	
-94	209-523361-11	BELLCRANK, Spoiler control inboard assembly of LH (supersedes 209-52338-1 for future procurement)	1	FL	
	209-523361-12	BELLCRANK, Spoiler control inboard assembly of RH (supersedes 209-52338-2 for future procurement)	1	FL	
-95	HSBG-4S	. BEARING (HLF) (97613)	1	FR	
-96	4B20M-S9-18	. BUSHING, Press fit flanged (NA) (89372)	2	FR	
-97	NAS516-1	. FITTING, Lubricator	2	FR	
-98	AN174-10A	BOLT	4	FR	
-99	AN365-428	NUT	6	FR	
-100	2W18-416	WASHER, Flat (NA) (89372)	10	FR	
-101	AN509-416R16	SCREW	2	FR	
-102	209-523355-1	BRACKET, Spoiler control inboard aft LH	1	FR	
	209-523355-2	BRACKET, Spoiler control inboard aft RH	1	FR	
-103	209-523344	ROD ASSEMBLY, Spoiler control inboard	1	FR	
-104	209-523346	. CLEVIS, Spoiler control rod end	1	FR	
-105	1N7-7A	. NUT, Check (NA) (89372)	1	FR	
-106	2W15-7	. WASHER, Lock (NA) (89372)	1	FR	
-107	209-523345	. ROD END, Spoiler control inboard assembly of	1	FR	
-108	HSBG-4S	. . BEARING (HLF) (97613)	1	FR	
	NAS516-1	. . FITTING, Lubricator	1	FR	
-109	1N7-7L	. NUT, Check (NA) (89372)	1	FR	
-110	209-523347-3	. ROD, Spoiler control	1	FR	
-111	209-523350	ROD ASSEMBLY, Spoiler control intermediate	1	FR	
-112	209-523351	. CLEVIS, Spoiler control rod double	1	FR	
-113	1N7-7A	. NUT, Check (NA) (89372)	1	FR	
-114	2W15-7	. WASHER, Lock (NA) (89372)	1	FR	
-115	209-523345	. ROD END, Spoiler control inboard assembly of	1	FR	
-116	HSBG-4S	. . BEARING (HLF) (97613)	1	FR	
	NAS516-1	. . FITTING, Lubricator	1	FR	
-117	AN316-7L	. NUT	1	FR	
-118	209-523347-5	. ROD, Spoiler control	1	FR	
-119	209-52352	ROD ASSEMBLY, Spoiler control outboard	1	FR	
-120	209-523357	. CLEVIS, Spoiler control rod double	1	FR	
-121	1N7-7A	. NUT, Check (NA)(89372)	1	FR	
-122	2W15-7	. WASHER, Lock (NA) (89372)	1	FR	
-123	209-523353	. CLEVIS, Spoiler control rod outboard	1	FR	
-124	1N7-7L	. NUT, Check (NA) (89372)	1	FR	
-125	209-523347-7	. ROD, Spoiler control	1	FR	
-126	AN320-5	NUT	3	FR	
-127	2W18-516	WASHER, Flat (NA) (89372)	3	FR	
-128	2W18-516M	WASHER, Flat (NA) (89372)	3	FR	
-129	NAS464P5-22	BOLT	3	FR	
-130	4B21M-S5-100	BUSHING, Spacer (NA) (89372)	3	FR	
-131	209-523348-1	BELLCRANK, Spoiler control assembly of LH (superseded by 209-523360-11 for future procurement) (209-523348-1 not to be used for replacement on any aircraft)	3	HJ	
	209-523348-2	BELLCRANK, Spoiler control assembly of RH (superseded by 209-523360-12 for future procurement) (209-523348-2 not to be used for replacement on any aircraft)	3	HJ	

WING FLAP SPOILERS CONTROL MECHANISM (WING SECTION) - APPLICABLE TO AIRCRAFT CODED (FR)

FIGURE & INDEX NO.	PART NUMBER	1 2 3 4 5 6 7 NOMENCLATURE	UNITS PER ASSY.	USABLE ON CODE	S/C NO.
176-132	209-523360-11	BELLCRANK, Spoiler control assembly of (supersedes 209-523348-1 for future procurement)	3	FL	
	209-523360-12	BELLCRANK, Spoiler control assembly of (supersedes 209-523348-2 for future procurement)	3	FL	
-133	4B20S7-010	. BUSHING, Press fit flanged (NA) (89372)	2	FR	
-134	HSBG-4S	. BEARING (HLF) (97613)	1	FR	
-135	NAS516-1	. FITTING, Lubricator	2	FR	
-136	AN509-416R16	SCREW	2	FR	
	2W16-416	WASHER, Flat (NA) (89372)	2	FR	
	AN365-428	NUT	2	FR	
-137	AN509-416R18	SCREW	2	FR	
-138	209-523349-3	BRACKET, Spoiler control LH	1	HJ	
	209-523349-4	BRACKET, Spoiler control RH	1	HJ	
-139	209-523364-5	BRACKET, Spoiler control LH	1	FL	
	209-523364-6	BRACKET, Spoiler control RH	1	FL	
-140	AN509-416R15	SCREW	2	FR	
-141	AN509-416R18	SCREW	2	FR	
-142	209-523349-1	BRACKET, Spoiler control LH	1	HJ	
	209-523349-2	BRACKET, Spoiler control RH	1	HJ	
-143	209-523364-3	BRACKET, Spoiler control LH	1	FL	
	209-523364-4	BRACKET, Spoiler control RH	1	FL	
-144	AN509-416R14	SCREW	2	FR	
-145	AN509-416R16	SCREW	2	FR	
-146	209-523349-1	BRACKET, Spoiler control LH	1	HJ	
	209-523349-2	BRACKET, Spoiler control RH	1	HJ	
-147	209-523364-1	BRACKET, Spoiler control LH	1	FL	
	209-523364-2	BRACKET, Spoiler control RH	1	FL	

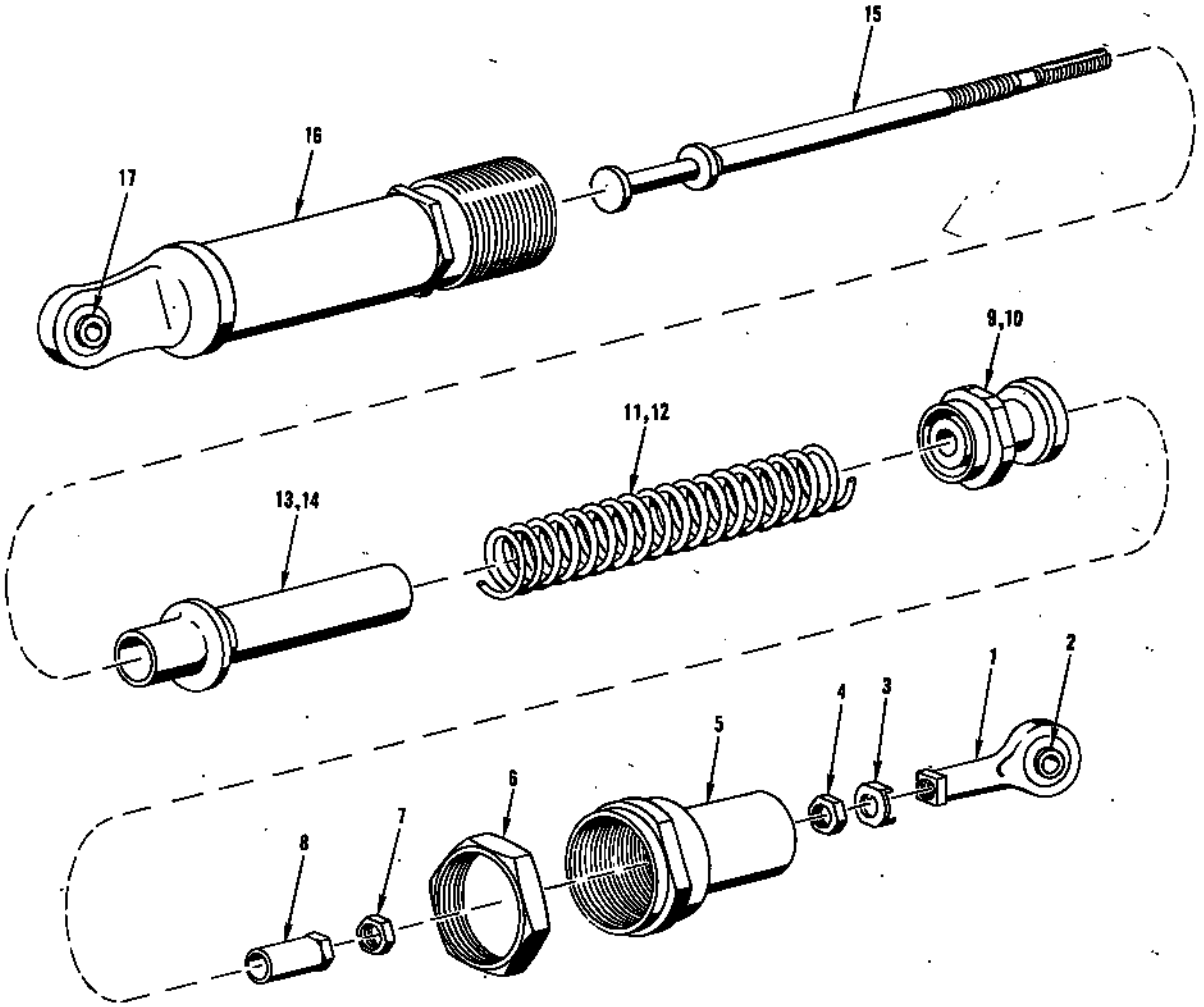

FIGURE 177 - HORIZONTAL STABILIZER CONTROL FEEL BUNGEE

FIGURE & INDEX NO.	PART NUMBER	1 2 3 4 5 6 7 NOMENCLATURE	UNITS PER ASSY.	USABLE ON CODE	S/C NO.
177	209-52218-31	BUNGEE ASSEMBLY, Horizontal stabilizer control feel (supersedes 209-52280-31 for future procurement)	1	ET	
	209-52218-41	BUNGEE ASSEMBLY, Horizontal stabilizer control feel	1	FR	
-1	209-52244	. ROD END ASSEMBLY, Horizontal stabilizer control bungee	1		
	209-52244-3	. . ROD END, Horizontal stabilizer control bungee rod end assembly	1		
-2	AN200KS4	. . BEARING	1		
-3	2W15-5	. WASHER, Lock (NA)	1		
-4	1N7-5A	. NUT, Check (NA)	1		
-5	209-52282	. CAP, Horizontal stabilizer control artificial feel bungee	1		
-6	187-52249	. NUT, Horizontal stabilizer control artificial feel bungee cap	1		
-7	1N7-6A	. NUT, Check (NA)	1		
-8	209-52274	. NUT, Horizontal stabilizer control artificial feel bungee	1		
-9	209-52215	. PISTON, Horizontal stabilizer control feel bungee	1	ET	
-10	209-52215-3	. PISTON, Horizontal stabilizer control feel bungee	1	FR	
-11	209-52288	. SPRING, Close tolerance compression	1	ET	
-12	209-522383	. SPRING, Close tolerance compression	1	FR	
-13	209-52217	. GUIDE, Horizontal stabilizer control feel bungee	1	ET	
-14	209-52217-3	. GUIDE, Horizontal stabilizer control feel bungee	1	FR	
-15	209-52214	. ROD, Horizontal stabilizer control feel bungee	1		
	209-52213	. HOUSING ASSEMBLY, Horizontal stabilizer control artificial feel bungee	1		
-16	209-52213-3	. . HOUSING, Horizontal stabilizer control artificial feel bungee housing assembly	1		
-17	AN200KS4	. . BEARING	1		

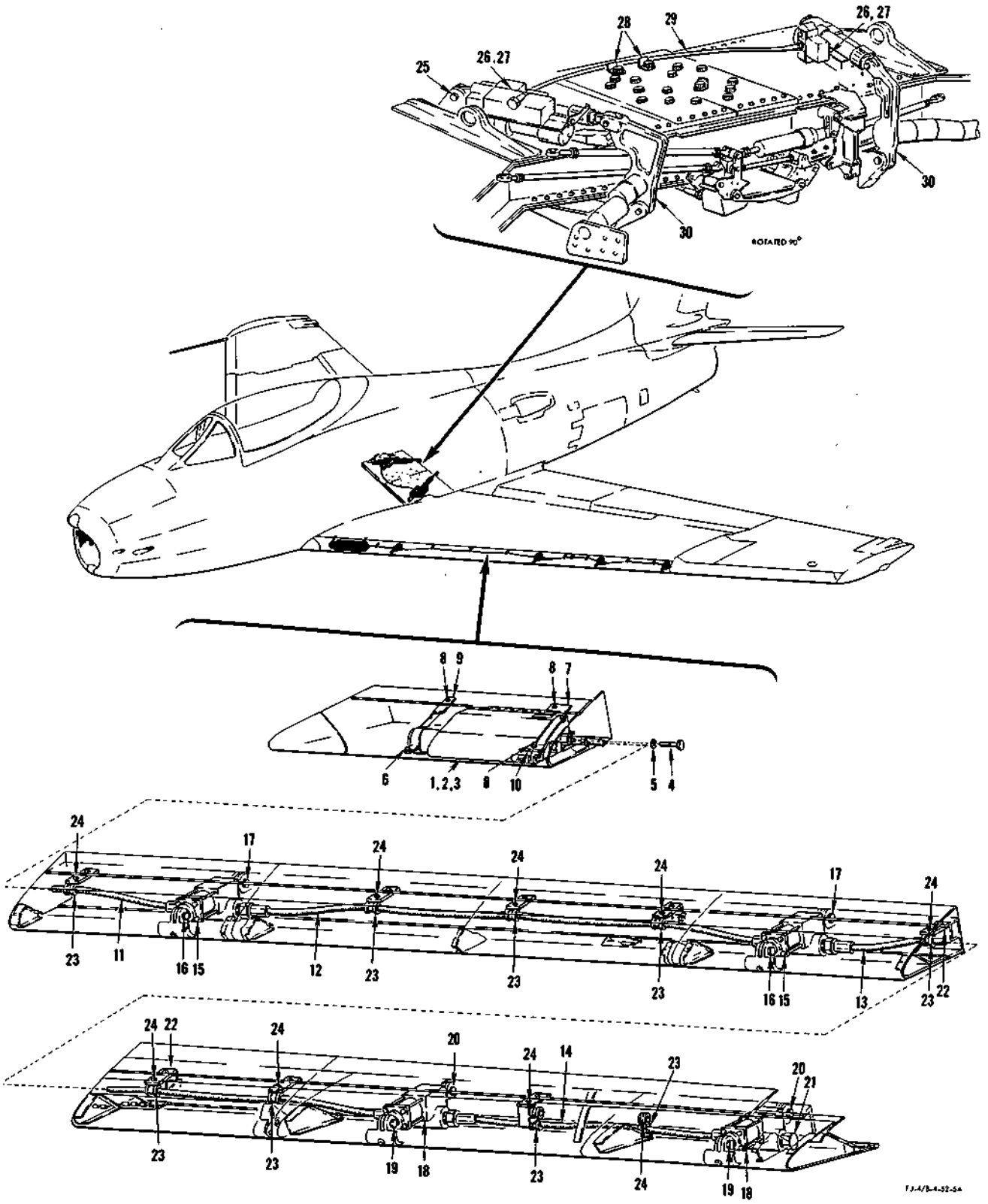

FIGURE 178 - INBOARD WING DROOP LEADING EDGE AND FLAP MECHANISM

INBOARD WING DROOP LEADING EDGE AND FLAP MECHANISM

FIGURE & INDEX NO.	PART NUMBER	1 2 3 4 5 6 7 NOMENCLATURE	UNITS PER ASSY.	USABLE ON CODE	S/C NO.
178-1	D-1900	MOTOR DRIVE (HOOV) (81817) (for breakdown see Technical Manual NA 03-5CHP-510) (superseded by D-1900-2 (HOOV) (81817) for future procurement)	1	RB	
-2	D-1900-2	MOTOR DRIVE (HOOV) (81817) (supersedes D-1900 (HOOV) (81817) and superseded by D-1900-3 (HOOV) (81817) for future procurement)	1	SM	
-3	D-1900-3	MOTOR DRIVE (HOOV) (81817) (supersedes D-1900-2 (HOOV) (81817) for future procurement)	1	SN	
-4	AN3H4A	BOLT	3		
-5	2W18-10	WASHER, Flat (NA) (89372)	3		
-6	AN3-4A	BOLT	1		
	2W18-10M	WASHER, Flat (NA) (89372)	2		
	AN365-1032	NUT	1		
-7	209-52688-1	BRACKET, Droop leading edge inboard motor drive LH	1		
	209-52688-2	BRACKET, Droop leading edge inboard motor drive RH	1		
-8	AN509-10R13	SCREW	3		
	2W18-10M	WASHER, Flat (NA) (89372)	3		
	AN365-1032	NUT	3		
-9	209-52689-1	CLAMP ASSEMBLY, Droop leading edge inboard motor drive LH	1		
	209-52689-2	CLAMP ASSEMBLY, Droop leading edge inboard motor drive RH	1		
-10	209-52690-1	CLIP, Droop leading edge inboard motor drive support LH	1		
	209-52690-2	CLIP, Droop leading edge inboard motor drive support RH	1		
-11	SK4748-20	SHAFT, Flexible (SFW) (57711)	1		
-12	SK4748-38-5/8	SHAFT, Flexible (SFW) (57711)	1		
-13	SK4748-37-3/8	SHAFT, Flexible (SFW) (57711)	1		
-14	SK4748-26-3/8	SHAFT, Flexible (SFW) (57711)	1		
-15	233T100-501	SCREW JACK (Talley Machine and Mfg Co) (98889)	2		
-16	NAS464-4A11	BOLT	2		
	2W18-416	WASHER, Flat (NA) (89372)	4		
	AN364-428	NUT	2		
-17	NAS464-4A14	BOLT	2		
	2W18-416M	WASHER, Flat (NA) (89372)	4		
	AN364-428	NUT	2		
-18	233T100-301	SCREW JACK (Talley Machine and Mfg Co) (98889)	2		
-19	NAS464-4A11	BOLT	2		
	2W18-416M	WASHER, Flat (NA) (89372)	4		
	AN364-428	NUT	2		
-20	NAS464-4A11	BOLT	2		
	2W18-416M	WASHER, Flat (NA) (89372)	2		
	2W18-416	WASHER, Flat (NA) (89372)	2		
	AN364-428	NUT	2		
-21	A-3613	CAP (HOOV) (81817)	1		
-22	209-52677	BRACKET ASSEMBLY, Wing leading edge wing station 131 and station 144	2		
-23	MS21919DG7	CLAMP	9		
-24	AN520-10-8	SCREW	9		
	2W18-10M	WASHER, Flat (NA) (89372)	18		
	AN365-1032	NUT	9		
-25	NAS464-5-24	BOLT	4		
	2W18-516	WASHER, Flat (NA) (89372)	8		
	AN320C5	NUT	4		
-26	D-1830-1	FLAP ACTUATOR (HOOV) (81817) (superseded by D-1830-2 (HOOV) (81817) for future procurement)	2	QZ	
-27	D-1830-2	FLAP ACTUATOR (HOOV) (81817) (supersedes D-1830-1 (HOOV) (81817) for future procurement)	2	RA	
	A3613	CAP (HOOV) (81817)	1		
-28	MS21919G10	CLAMP	2		
	AN520-10R7	SCREW	2		
	2W18-10M	WASHER, Flat (NA) (89372)	4		
	AN365-1032	NUT	2		
-29	SK4745-D-39-1/4	SHAFT, Flexible (SFW) (57711) (supersedes SK4745-A-39-1/4 (SFW) (57711) for future procurement) (711AD-039-08 (LA) (35351) may be used as an alternate)	1		
-30	209-18090	TUBE AND HORN ASSEMBLY, Flap torque (see Inbd Wing - Structure)	1		

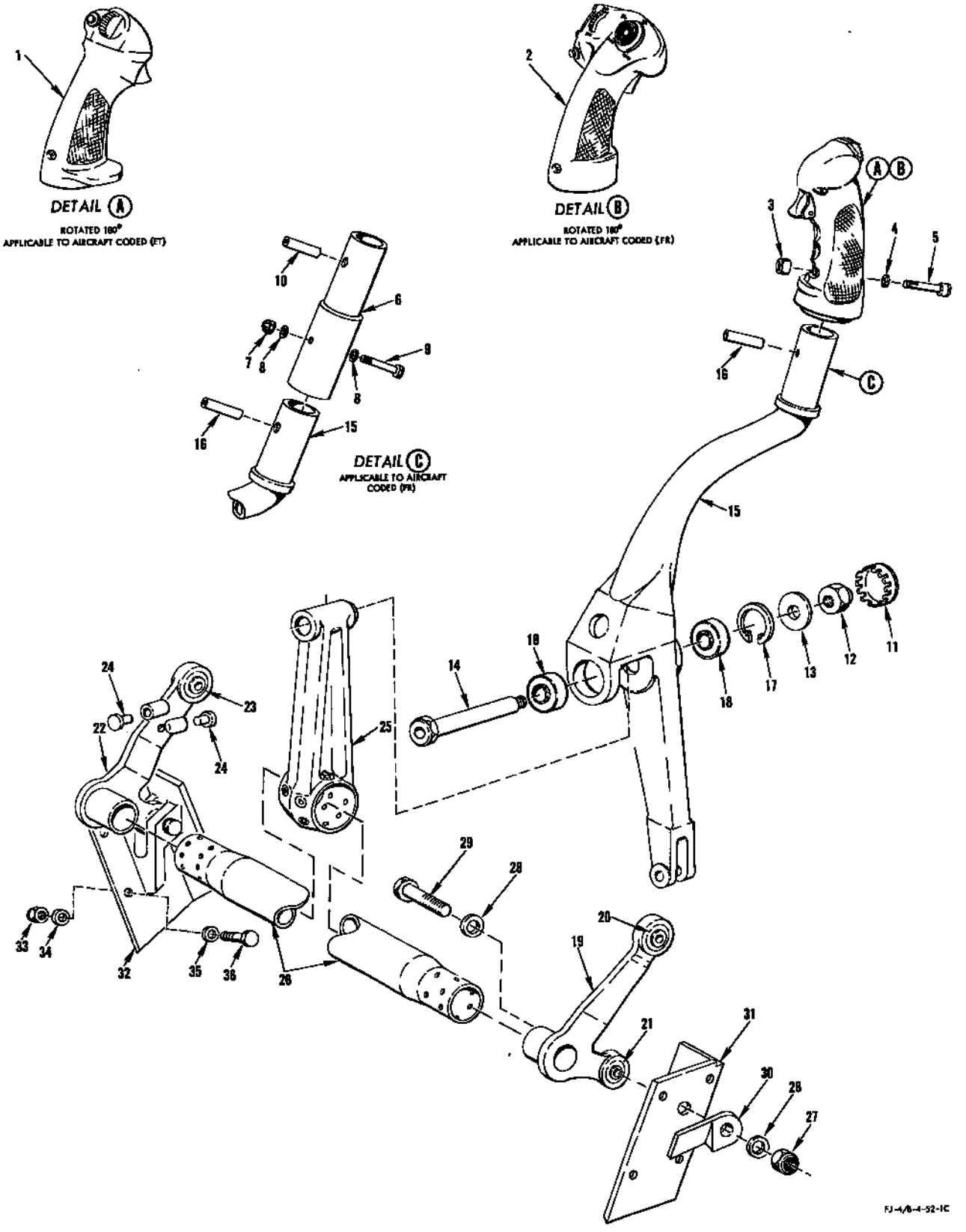

FIGURE 179 - PILOTS COMPLETE CONTROL STICK ASSEMBLY

PILOTS COMPLETE CONTROL STICK ASSEMBLY

FIGURE & INDEX NO.	PART NUMBER	1 2 3 4 5 6 7 NOMENCLATURE	UNITS PER ASSY.	USABLE ON CODE	S/C NO.
179	181-52101-31	STICK ASSEMBLY, Pilots control complete	1	HW	
	181-52101-51	STICK ASSEMBLY, Pilots control complete	1	HX	
	181-52101-61	STICK ASSEMBLY, Pilots control complete	1	KX	
	181-52101-81	STICK ASSEMBLY, Pilots control complete	1	KY	
-1	G-56778A	. GRIP ASSEMBLY, Modified type B-8A (GN) (73949) (supersedes G-56778 (GN) (73949) for future procurement)	1	ET	
-2	PEI-116C	. GRIP ASSEMBLY, Pilots control stick (PIQA) (81380)	1	FR	481
-3	AN364-1032	. . NUT	1		
-4	AN935-10L	. . WASHER	1		
-5	AN502-10-26	. . SCREW	1		
-6	209-52110	. ADAPTER ASSEMBLY, Pilots control upper stick	1	FR	
	ATTACHING PARTS				
-7	AN364-1032	. NUT	1	FR	
-8	2W18-10	. WASHER, Flat (NA) (89372)	2	FR	
-9	NAS464P3-25A	. BOLT	1	FR	
	---*---				
-10	215-52108	. . SLEEVE, Pilots control stick grip attaching	1	FR	
-11	48132	. PLUG BUTTON (UC) (61864)	1		
-12	AN320-5	. NUT	1		
-13	2W2SP21-28-62	. WASHER, Thrust (NA) (89372)	1		
-14	140-52102	. PIN, Pilots control stick pivot	1		
-15	181-52103	. STICK ASSEMBLY, Pilots control upper	1		
-16	181-52108	. . SLEEVE, Pilots control stick grip attachment	1		
-17	NAS50-137	. . RING	1		
-18	AN201KP10A	. . BEARING	2		
	181-52101-5	. STICK SUBASSEMBLY, Pilots complete	1		
-19	181-52102-5	. . HORN ASSEMBLY, Pilots control stick LH stabilizer	1		
	181-52102-3	. . . HORN, Pilots control stick LH stabilizer horn assembly	1		
-20	AN201KP4A	. . . BEARING	1		
-21	AN200KS4	. . . BEARING	1		
-22	181-52104-5	. . HORN ASSEMBLY, Pilots control stick RH stabilizer	1		
	181-52104-3	. . . HORN, Pilots control stick RH stabilizer horn assembly	1		
-23	AN200KS4	. . . BEARING	1		
	AN200KP4	. . . BEARING	1		
-24	1P7	. . . PLUG, Control stop (NA) (89372)	2		
-25	152-52104-5	. . BASE, Pilots control stick	1		
-26	181-52105	. . TUBE, Pilots control stick torque	1		
-27	AN365-428	NUT	1		
-28	2W18-416	WASHER, Flat (NA) (89372)	2		
-29	AN174-17A	BOLT	1		
-30	181-52107-1	SHIM, Control stick support LH	1		
	181-52107-2	SHIM, Control stick support RH	1		
-31	181-52106-1	SUPPORT, Pilots control stick hinge LH	1		
	ATTACHING PARTS				
	AN3-6A	BOLT	4		
	2W18-10M	WASHER, Flat (NA) (89372)	4		
	2W18-10	WASHER, Flat (NA) (89372)	4		
	AN365-1032	NUT	4		
	---*---				
-32	181-52106-2	SUPPORT, Pilots control stick hinge RH	1		
-33	AN365-1032	NUT	4		
-34	2W18-10	WASHER, Flat (NA) (89372)	4		
-35	2W18-10M	WASHER, Flat (NA) (89372)	4		
-36	AN3-6A	BOLT	4		

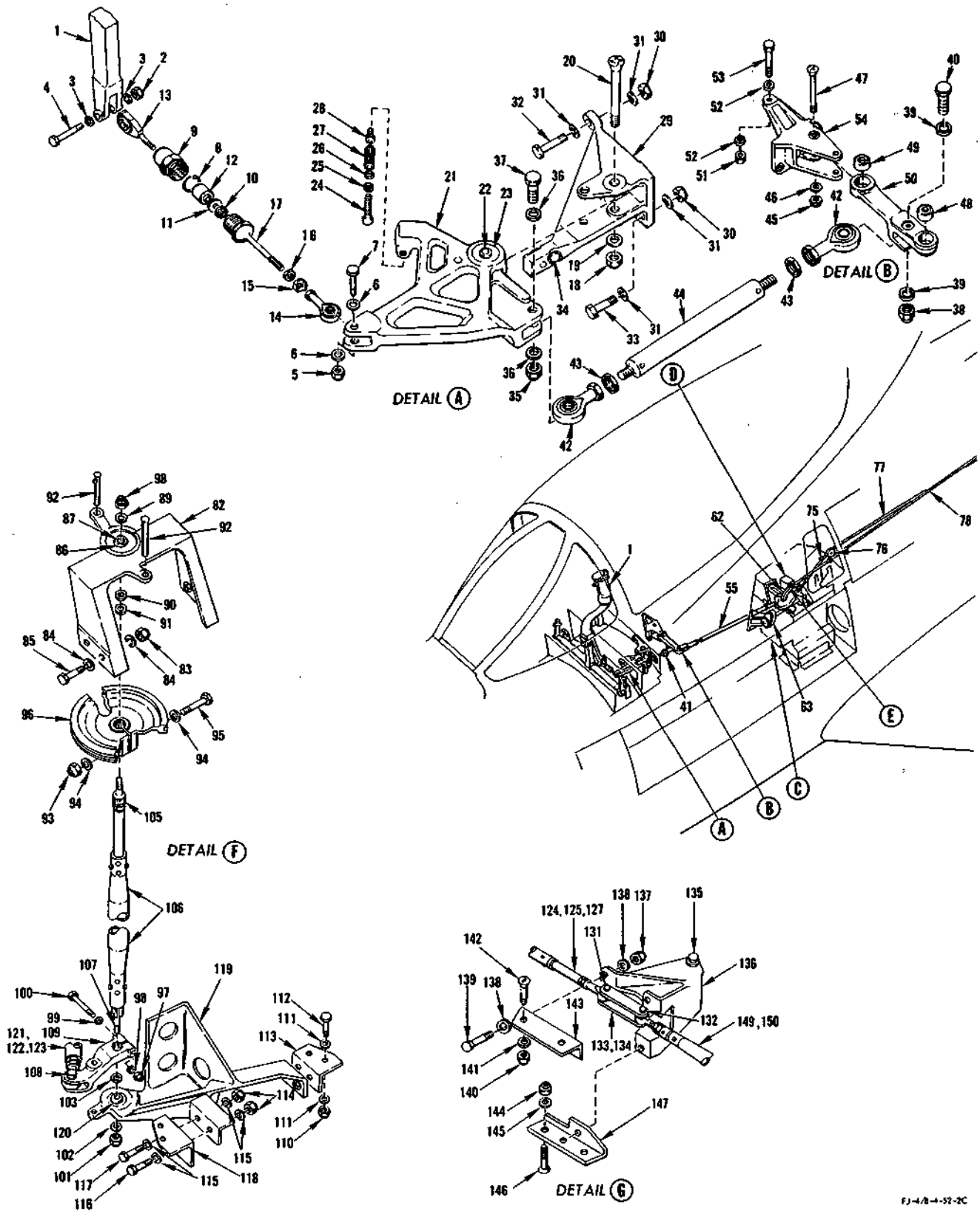

FIGURE 180 - AILERON CONTROL (Sheet 1)

AILERON CONTROL

FIGURE & INDEX NO.	PART NUMBER	1 2 3 4 5 6 7 NOMENCLATURE	UNITS PER ASSY.	USABLE ON CODE	S/C NO.
180-61	2W18-10M	WASHER, Flat (NA) (89372)	15		
-62		RUDDER, STABILIZER AND AILERON BELLCRANK AND SECTOR ASSEMBLY (see figure 191)	1		
-63	209-52331	DRIVE ASSEMBLY, Aileron control centering mechanism (see figure 194 for breakdown)	1		
	209-52389	GUARD ASSEMBLY, Aileron control sector (upper)	1		
	ATTACHING PARTS				
-64	AN3-4A	BOLT	2		
-65	2W18-10M	WASHER, Flat (NA) (89372)	2		
	---*---				
-66	AN365-428	. NUT	1		
-67	2W18-416M	. WASHER, Flat (NA) (89372)	2		
-68	2W13-4	. WASHER, Serrated (NA) (89372)	2		
-69	AN4-16A	. BOLT	1		
-70	NAS42DD8-64	. SPACER	1		
-71	209-52389-3	. GUARD SUBASSEMBLY, Aileron control sector (upper)	1		
-72	209-52395	GUARD, Aileron control sector (lower)	1		
-73	NAS221-9	SCREW	2		
-74	2W18-10M	WASHER, Flat (NA) (89372)	2		
-75	209-52049	SEAL, Control cable	4		
-76	209-52334	BRACKET ASSEMBLY, Aileron control fuselage station 129 LH side (supersedes 209-52376-101 for future procurement)	1		
	AN365-1032	. NUT	1		
	2W18-10	. WASHER, Flat (NA) (89372)	4		
	AN3-10A	. BOLT	1		
	AN210-1B	. PULLEY	1		
-77	209-52321	CABLE ASSEMBLY, Aileron control fuselage station 119.375 (lower)	1		
	AN664C3	. TERMINAL	1		
	AN669L3LH	. TERMINAL	1		
-78	209-52320	CABLE ASSEMBLY, Aileron control fuselage station 119.375 to station 195 (upper)	1		
	AN664C3	. TERMINAL	1		
	AN669L3RH	. TERMINAL	1		
-79	AN155-16L	BARREL	2		
-80	209-52322	CABLE ASSEMBLY, Aileron control fuselage station 195 to station 223 (upper)	1		
	AN664C3	. TERMINAL	1		
	AN669L3LH	. TERMINAL	1		
-81	209-52323	CABLE ASSEMBLY, Aileron control fuselage station 195 to station 223 (lower)	1		
	AN664C3	. TERMINAL	1		
	AN669L3LH	. TERMINAL	1		
-82	209-52346	SUPPORT ASSEMBLY, Aileron control forward fuselage torque tube (upper)	1		
	ATTACHING PARTS				
-83	AN365-428	NUT	4		
-84	2W18-416M	WASHER, Flat (NA) (89372)	8		
-85	AN174-6A	BOLT	4		
	---*---				
-86	AN200KS5	. BEARING	1		
-87	4B22-5B	. BUSHING, Insert (NA) (89372)	1		
-88	AN365-524	NUT	1		
-89	2W18-516M	WASHER, Flat (NA) (89372)	1		
-90	2W1AL28-22-32	WASHER, Plain (NA) (89372)	1		
-91	2W1AL24-22-32	WASHER, Plain (NA) (89372)	1		
-92	NAS427T14	PIN	2		
-93	AN365-428	NUT	2		
-94	2W18-416	WASHER, Flat (NA) (89372)	2		
-95	AN4-14A	BOLT	1		
-96	209-52306	SECTOR, Aileron control aft fuselage torque tube	1		
-97	AN365-428	NUT	1		
-98	2W18-416	WASHER, Flat (NA) (89372)	1		
-99	2W18-416M	WASHER, Flat (NA) (89372)	1		
-100	AN4-16A	BOLT	1		
-101	AN364-524	NUT	1		
-102	2W18-516M	WASHER, Flat (NA) (89372)	1		
-103	2W1AL20-32-62	WASHER, Plain (NA) (89372)	1		
-104	209-52305	TORQUE TUBE ASSEMBLY, Aileron control aft fuselage	1		
-105	209-52302	. END, Aileron control aft fuselage torque tube	1		
	209-52374	. PLUG, Torque tube end filler	2		
-106	209-52305-3	. TUBE, Aileron control aft fuselage torque tube assembly	1		
-107	209-52325	. END, Aileron control aft fuselage torque tube	1		
-108	AN174-12A	BOLT	1		
	2W18-416M	WASHER, Flat (NA) (89372)	2		
	AN365-428	NUT	1		
-109	209-52307-3	ARM, Aileron control aft fuselage torque tube	1		
-110	AN365-428	NUT	2		
-111	2W18-416	WASHER, Flat (NA) (89372)	4		
-112	AN4-15A	BOLT	2		
-113	209-52370	SUPPORT, Aileron control fuselage station 225 (LH only)	1		
-114	AN365-428	NUT	4		
-115	2W18-416M	WASHER, Flat (NA) (89372)	8		
-116	AN174-6A	BOLT (outboard)	2		
-117	AN4-6A	BOLT (inboard)	2		
-118	209-52364	SUPPORT, Aileron control fuselage station 219.562 (LH only)	1		
-119	209-52347	SUPPORT ASSEMBLY, Aileron control forward fuselage torque tube lower	1		
-120	AN200KS5	. BEARING	1		

AILERON CONTROL

FIGURE & INDEX NO.	PART NUMBER	1 2 3 4 5 6 7 NOMENCLATURE	UNITS PER ASSY.	USABLE ON CODE	S/C NO.
180-121	209-52345	ROD ASSEMBLY, Aileron control wing center section to fuselage	1	U	
	209-52345-11	. ROD SUBASSEMBLY, Aileron control wing center section to fuselage	1	U	
	209-52344	. . ROD END ASSEMBLY, Aileron control wing center section	1	U	
	AN200KS4	. . . BEARING	1	U	
	AN316-6R	. NUT	1	U	
	RE4M6	. ROD END (FAF) (21335)	1	U	
-122	209-523114	ROD, Aileron control wing center section assembly of	1	GA	
	209-523114-11	. ROD SUBASSEMBLY, Aileron control wing center section	1	GA	
	209-52344	. . ROD END ASSEMBLY, Aileron control wing center section	1	GA	
	AN200KS4	. . . BEARING	1	GA	
	AN316-6R	. NUT	1	GA	
	RE4M6	. ROD END (FAF) (21335)	1	GA	
-123	209-523164	ROD, Aileron control fuselage to wing center section assembly of	1	FR	
	209-523164-11	. ROD SUBASSEMBLY, Aileron control fuselage to wing center section	1	FR	
	AN316-5	. NUT	1	FR	
	209-523311	. ROD END, Spoiler control bungee	1	FR	
	KS4A	. BEARING (FAF) (21335)	1	FR	
-124	209-52314-21	ROD ASSEMBLY, Aileron control wing center section (supersedes 209-52314 for future procurement)	2	U	
	209-52314-41	. ROD SUBASSEMBLY, Aileron control wing section	1	U	
	MR-4	. ROD END (SHA) (77896)	1	U	
	AN316-6R	. NUT	1	U	
-125	209-523116	ROD ASSEMBLY, Aileron control wing center section LH	1	GA	
	209-523116-31	. ROD SUBASSEMBLY, Aileron control wing center section LH	1	GA	
	MR-4	. ROD END (SHA) (77896)	1	GA	
	AN316-6R	. NUT	1	GA	
-126	209-523115	ROD ASSEMBLY, Aileron control wing center section RH	1	GA	
	209-523115-31	. ROD SUBASSEMBLY, Aileron control wing center section RH	1	GA	
	MR-4	. ROD END (SHA) (77896)	1	GA	
	AN316-6R	. NUT	1	GA	
-127	209-523178	ROD ASSEMBLY, Aileron control wing center section to wing LH	1	FR	
	209-523178-11	. ROD SUBASSEMBLY, Aileron control wing center section to wing LH	1	FR	
	209-523186	. CLEVIS, Aileron control wing center section	1	FR	
	AN316-6R	. NUT	1	FR	
-128	209-523163	ROD, Aileron control wing center section RH assembly of (see figure 175 for breakdown)	1	FR	
-129		AILERON TRIM AND LOWERING MECHANISM - APPLICABLE TO AIRCRAFT CODED (ET) (see figure 174)			
-130		AILERON TRIM AND FLAP SPOILER MECHANISM (FUSELAGE SECTION) - APPLICABLE TO AIRCRAFT CODED (FR) (see figure 175)			
-131	AN174-13A	BOLT	1		
	2W18-416M	WASHER, Flat (NA) (89372)	2		
	AN364-428	NUT	1		
-132	NAS464-4A15	BOLT	1		
	2W18-416M	WASHER, Flat (NA) (89372)	2		
	AN364-428	NUT	1		
-133	209-52367-11	BELLCRANK ASSEMBLY, Aileron control inboard wing	1	U	
-134	209-523129-11	BELLCRANK, Aileron control wing station 30.4 assembly of (supersedes 209-52301 for future procurement)	1	V	
	ATTACHING PARTS				
-135	NAS464-4A30	BOLT	1		
	2W18-416M	WASHER, Flat (NA) (89372) (under bolthead)	1		
	2W18-416	WASHER, Flat (NA) (89372)	1		
	AN364-428	NUT	1		
	AN201KP4A	. BEARING	2		
	4S7-4-688	. SPACER, Flanged dual bearing (NA) (89372)	1		
-136	209-52371-1	SUPPORT, Aileron control inboard wing bellcrank LH	1		
	209-52371-2	SUPPORT, Aileron control inboard wing bellcrank RH	1		
-137	AN365-428	NUT	3		
-138	2W18-416	WASHER, Flat (NA) (89372)	6		
-139	AN4-7A	BOLT	3		
-140	EB-054	NUT (EN) (72962)	2		
-141	2W18-516	WASHER, Flat (NA) (89372)	2		
-142	HT5M-11	BOLT (HIS) (73197)	2		
-143	209-52375-1	ANGLE, Aileron control inboard wing bellcrank support LH	1		
	209-52375-2	ANGLE, Aileron control inboard wing bellcrank support RH	1		
-144	EB-054	NUT (EN) (72962)	3		
-145	2W18-516	WASHER, Flat (NA) (89372)	3		
-146	HT5M-11	BOLT (HIS) (73197)	3		
-147	209-52377-1	ANGLE, Aileron control inboard wing bellcrank support lower LH	1		
	209-52377-2	ANGLE, Aileron control inboard wing bellcrank support lower RH	1		
-148	NAS464-4A13	BOLT	2		
	2W18-416M	WASHER, Flat (NA) (89372) (under bolthead)	2		
	2W18-416	WASHER, Flat (NA) (89372) (under nut)	2		
	AN364-428	NUT	2		
-149	209-523149	ROD ASSEMBLY, Aileron control inboard wing (supersedes 209-52362 for future procurement)	1	U	
	209-523149-11	. ROD SUBASSEMBLY, Aileron control inboard wing	1	U	
	MR-4	. ROD END (SHA) (77896)	2	U	
	AN316-6R	. NUT	2	U	
-150	209-523134	ROD ASSEMBLY, Inboard aileron control	1	V	
	209-523134-11	. ROD SUBASSEMBLY, Inboard aileron control	1	V	

AILERON CONTROL

FIGURE & INDEX NO.	PART NUMBER	1 2 3 4 5 6 7 NOMENCLATURE	UNITS PER ASSY.	USABLE ON CODE	S/C NO.
180	MR-4	. ROD END (SHA) (77896)	2	V	
	AN316-6R	. NUT	2	V	
-151	209-523151	ROD ASSEMBLY, Aileron control outboard wing (supersedes 209-52369 for future procurement)	1	U	
	209-523151-11	. ROD SUBASSEMBLY, Aileron control outboard wing	1	U	
	209-523151-3	. . TUBE, Aileron control outboard wing	1	U	
	MR-4	. ROD END (SHA) (77896)	1	U	
	AN316-6R	. NUT	1	U	
-152	209-523152	ROD ASSEMBLY, Outboard aileron control	1	V	
	209-523152-11	. ROD SUBASSEMBLY, Outboard aileron control	1	V	
	MR-4	. ROD END (SHA) (77896)	1	V	
	AN316-6R	. NUT	1	V	
-153	NAS464-4A25	BOLT	1	ET	
-154	NAS464-4A30	BOLT	1	FR	
	2W18-416M	WASHER, Flat (NA) (89372) (under bolthead)	1		
	2W18-416	WASHER, Flat (NA) (89372) (under nut)	1		
	AN364-428	NUT	1		
-155	209-52368-11	IDLER ASSEMBLY, Aileron control inboard LH	1		
	209-52368-12	IDLER ASSEMBLY, Aileron control inboard RH	1		
	AN201KP4A	. BEARING	2		
	AN200KS4	. BEARING	1		
	4S7-4-688	. SPACER, Flanged dual bearing (NA) (89372)	1		
-156	NAS464-4A14	BOLT	1		
	2W18-416M	WASHER, Flat (NA) (89372)	2		
	AN364-428	NUT	1		
-157	NAS464-4A18	BOLT	1		
	2W18-416	WASHER, Flat (NA) (89372)	2		
	AN364-428	NUT	1		
-158	209-52366-11	BELLCRANK ASSEMBLY, Aileron flight control outboard LH	1	U	
	209-52366-12	BELLCRANK ASSEMBLY, Aileron flight control outboard RH	1	U	
	ATTACHING PARTS				
-159	AN365-428	NUT	1	U	
-160	2W18-416	WASHER, Flat (NA) (89372)	1	U	
-161	HT4M-43	BOLT (HIS) (73197)	1	U	
	---*---				
-162	AN201KP4A	. BEARING	1	U	
	AN207DP4	. BEARING	1	U	
	4S6-4-1.131	. SPACER, Plain dual bearing (NA) (89372)	1	U	
-163	1P7	. PLUG, Control stop (NA) (89372)	1	U	
-164	209-523131-11	BELLCRANK ASSEMBLY, Aileron flight control outboard LH	1	V	
	209-523131-12	BELLCRANK ASSEMBLY, Aileron flight control outboard RH	1	V	
	ATTACHING PARTS				
-165	AN365-428	NUT	1	V	
-166	2W18-416	WASHER, Flat (NA) (89372)	1	V	
-167	HT4M-43	BOLT (HIS) (73197)	1	V	
	---*---				
-168	AN201KP4A	. BEARING	1	V	
	AN207DP4A	. BEARING	1	V	
	4S7-4-1.131	. SPACER, Flanged dual bearing (NA) (89372)	1	V	
-169	AN364-428	NUT	1		
-170	2W18-416	WASHER, Flat (NA) (89372)	1		
-171	NAS334PA13	BOLT	1		
-172	209-58736	LINK ASSEMBLY, Hydraulic aileron flight control valve aft	2	U	
-173	209-58772	ROD ASSEMBLY, Aileron flight control actuator	2	V	
	209-58713	. ROD END ASSEMBLY, Hydraulic aileron flight control valve	1	U	
	209-58771	. ROD END ASSEMBLY, Aileron flight control actuator operating	1	V	
	DSRP-4	. . BEARING (FAF) (21335)	1		
	1N7-6LA	. NUT, Check (NA) (89372)	1		
	209-58751	. BARREL, Hydraulic aileron flight control rod	1		
	1N7-6A	. NUT, Check (NA) (89372)	1		
	209-58752	. ROD END, Hydraulic aileron flight control valve	1		
-174	209-14199-3	FITTING, Aileron bellcrank attaching inboard wing upper LH	1		
	209-14199-4	FITTING, Aileron bellcrank attaching inboard wing upper RH	1		
-175	HT4M-5	BOLT (HIS) (73197)	2		
-176	EB-048	NUT (EN) (72962)	2		
-177	2W18-416M	WASHER, Flat (NA) (89372)	3		
-178	HT4M-3	BOLT (HIS) (73197) (upper aft)	1		
-179	AN364-428	NUT (upper aft)	1		
-180	209-14200-3	FITTING, Aileron bellcrank attaching inboard wing LH	1		
	209-14200-4	FITTING, Aileron bellcrank attaching inboard wing RH	1		
-181	EB-048	NUT (EN) (72962)	3		
-182	2W18-416	WASHER, Flat (NA) (89372)	3		
-183	HT4M-5	BOLT (HIS) (73197)	3		
-184	209-58705	ACTUATOR ASSEMBLY, Hydraulic aileron flight control (see Hydraulic System)	1		

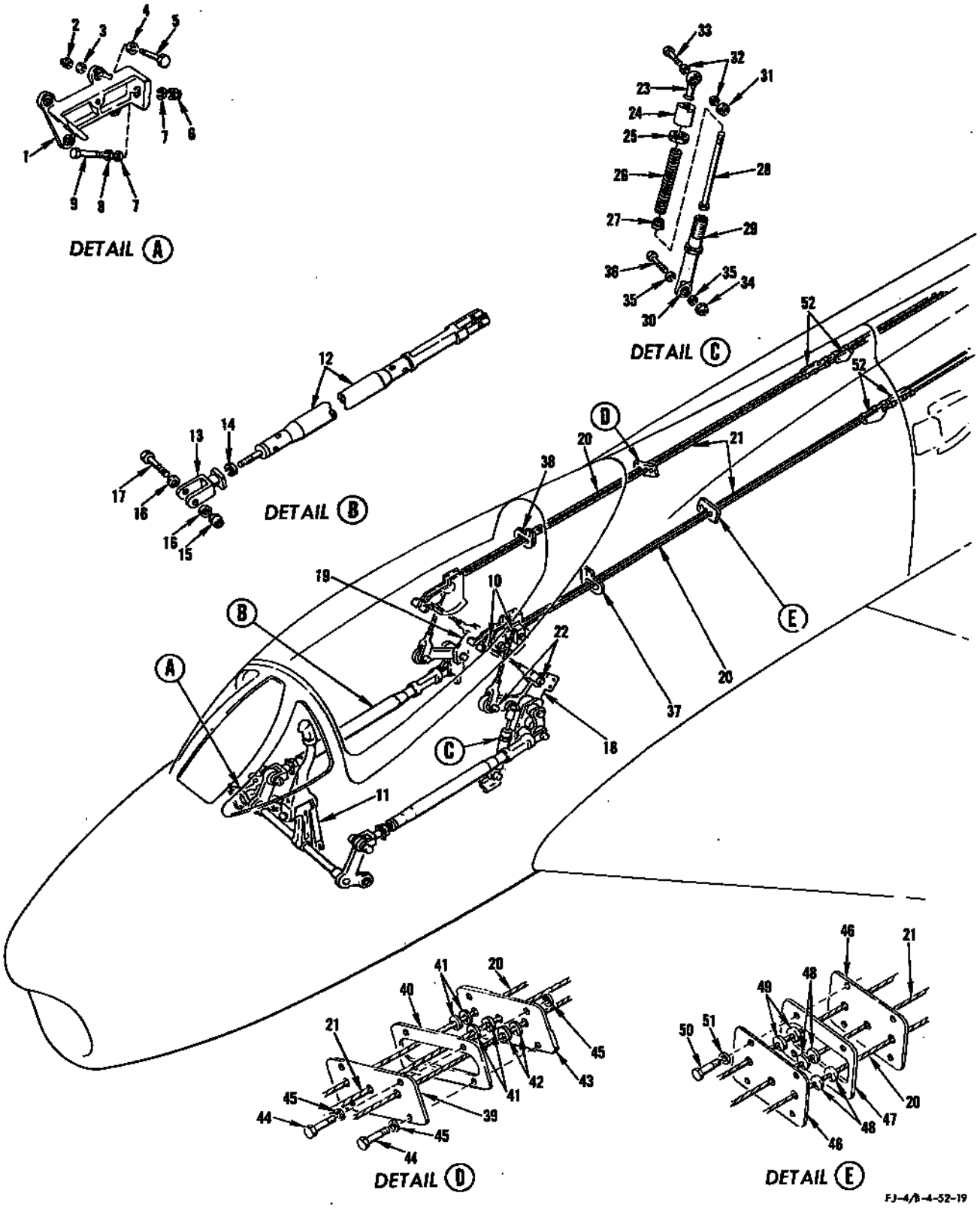

FIGURE 181 - HORIZONTAL STABILIZER CONTROL FORWARD FUSELAGE (STA 0 TO 236.25)

HORIZONTAL STABILIZER CONTROL FORWARD FUSELAGE (STA 0 TO 236.25)

FIGURE & INDEX NO.	PART NUMBER	1 2 3 4 5 6 7 NOMENCLATURE	UNITS PER ASSY.	USABLE ON CODE
181-1	181-52210	STOP ASSEMBLY, Horizontal stabilizer control stick	1	
	ATTACHING PARTS			
-2	AN365-428	NUT	4	
-3	2W18-10	WASHER, Flat (NA)	4	
-4	2W18-10M	WASHER, Flat (NA)	4	
-5	AN4-7A	BOLT	4	
	---*---			
-6	AN365-428	. NUT	2	
-7	2W18-416	. WASHER, Flat (NA)	4	
-8	1N7-4A	. NUT, Check (NA)	2	
-9	NAS428H4-14	. BOLT	2	
	209-52422-1	BRACKET ASSEMBLY, Rudder and horizontal stabilizer control fuselage station 130 LH	1	
	209-52422-2	BRACKET ASSEMBLY, Rudder and horizontal stabilizer control fuselage station 130 RH	1	
-10	AN219-4	. PULLEY	2	
	ATTACHING PARTS			
	AN4-10A	. BOLT	2	
	2W18-416	. WASHER, Flat (NA)	2	
	AN365-428	. NUT (forward pulley attaching)	1	
	---*---			
-11	181-52101	STICK ASSEMBLY, Pilots control complete (see figure 179 for breakdown)	1	
	181-52203	TUBE ASSEMBLY, Horizontal stabilizer control forward push pull	2	
-12	181-52203-3	. TUBE SUBASSEMBLY, Horizontal stabilizer control forward push pull	1	
	181-52216	. . CLEVIS, Horizontal stabilizer control forward push pull rod	1	
	181-52203-5	. . TUBE, Horizontal stabilizer control forward fuselage forward push pull tube subassembly	1	
	1R12P12-49-524	. . RIVETING ROD END, Threaded (NA)	1	
-13	165-52016	. CLEVIS, Surface control operating female	1	
-14	AN316-5R	. NUT	1	
-15	AN365-428	NUT	2	
-16	2W18-416	WASHER, Flat (NA)	4	
-17	AN174-12A	BOLT	2	
-18		RUDDER, STABILIZER AND AILERON BELLCRANK AND SECTOR ASSEMBLY (see figure 191 for breakdown)		
-19		RH RUDDER AND STABILIZER BELLCRANK AND SECTOR ASSEMBLY (see figure 192 for breakdown)		
-20	209-52232	CABLE ASSEMBLY, Horizontal stabilizer nose down forward	2	
	AN658-3	. TERMINAL	1	
	AN664C3	. TERMINAL	1	
-21	209-52231	CABLE ASSEMBLY, Horizontal stabilizer nose up forward	2	
	AN658-3	. TERMINAL	1	
	AN669L3LH	. TERMINAL	1	
-22	AN365-1032	NUT	2	
	2W18-10	WASHER, Flat (NA)	4	
	AN3-10A	BOLT	2	
	181-52255	BUNGEE ASSEMBLY, Horizontal stabilizer control bobweight balance (supersedes 187-52255-15 or 187-52255-25 for future procurement)	1	
-23	REB3N	. ROD END, Female threaded shank (FAF)	1	
-24	187-52257	. CAP, Horizontal stabilizer control bobweight balance bungee	1	
-25	187-52214	. NUT, Horizontal stabilizer control bobweight balance bungee	1	
-26	181-52258	. SPRING, Compression	1	
-27	181-52257	. PISTON, Horizontal stabilizer control bobweight balance bungee	1	
-28	187-52252	. ROD, Horizontal stabilizer control bobweight balance bungee	1	
	181-52256	. CYLINDER ASSEMBLY, Horizontal stabilizer control bobweight balance bungee	1	
-29	181-52256-3	. . CYLINDER, Horizontal stabilizer control bobweight balance bungee cylinder assembly	1	
-30	AN200KS3L	. . BEARING	1	
-31	AN365-1032	NUT	1	
-32	2W18-10	WASHER, Flat (NA)	2	
-33	AN173-10A	BOLT	1	
-34	AN365-1032	NUT	1	
-35	2W18-10	WASHER, Flat (NA)	2	
-36	AN173-6A	BOLT	1	
-37	209-52047-3	FAIRLEAD, Surface control cable support fuselage station 156 LH	1	
-38	209-52048-3	FAIRLEAD, Surface control cable support fuselage station 156 RH	1	
	ATTACHING PARTS			
	AN3-16A	BOLT	2	
	NAS42DD8-56	SPACER (install between 209-52047 and channel)	2	
	2W18-10M	WASHER, Flat (NA)	4	
	AN365-1032	NUT	2	
	---*---			
-39	194-52079-5	SEAL, Control cable fuselage station 180.906 RH	1	
-40	194-52078	SPACER, Control cable seal fuselage station 180.906 RH	1	
-41	181-520203-3	FAIRLEAD, Control cable seal (stabilizer cable)	4	
-42	181-520203-5	FAIRLEAD, Control cable seal (rudder cable)	2	
-43	194-52079-3	SEAL, Control cable fuselage station 180.906 RH	1	
-44	AN3-7A	BOLT	4	
-45	2W18-10	WASHER, Flat (NA) (install one between 194-52079-3 and bulkhead)	5	
-46	181-520207	SEAL, Control cable fuselage station 180.906 LH	2	
-47	181-520206	SPACER, Control cable seal fuselage station 180.906 LH	1	
-48	181-520203-3	FAIRLEAD, Control cable seal (stabilizer cable)	4	
-49	181-520203-5	FAIRLEAD, Control cable seal (rudder cable)	2	
-50	AN3-6A	BOLT	4	
-51	2W18-10	WASHER, Flat (NA)	8	
-52	1207-001	QUICK DISCONNECT (Bohanan Mfg Co)	4	

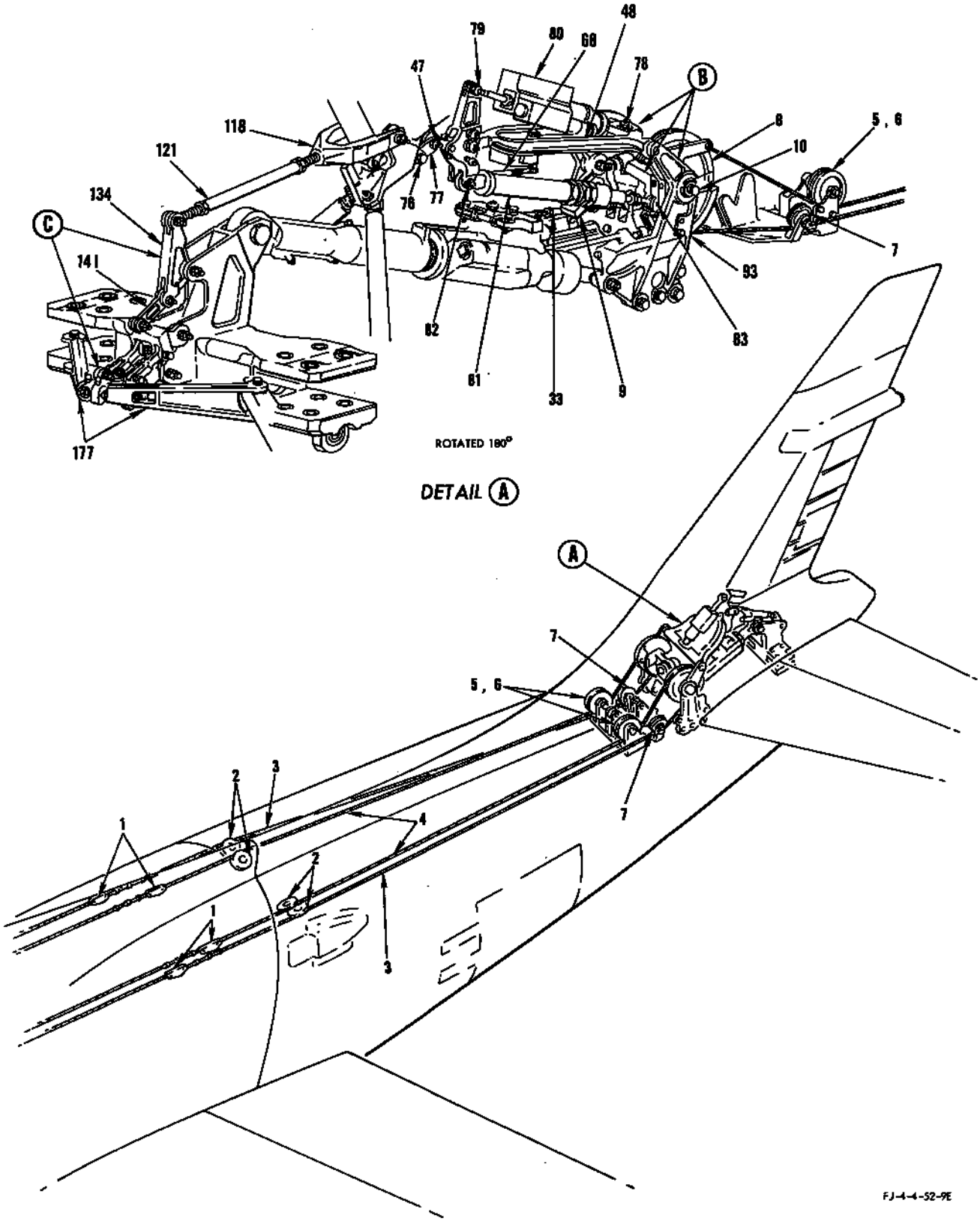

FIGURE 182 - HORIZONTAL STABILIZER CONTROL AFT FUSELAGE (STA 236.25 TO 429) - APPLICABLE TO AIRCRAFT CODED (ET) (SHEET 1)

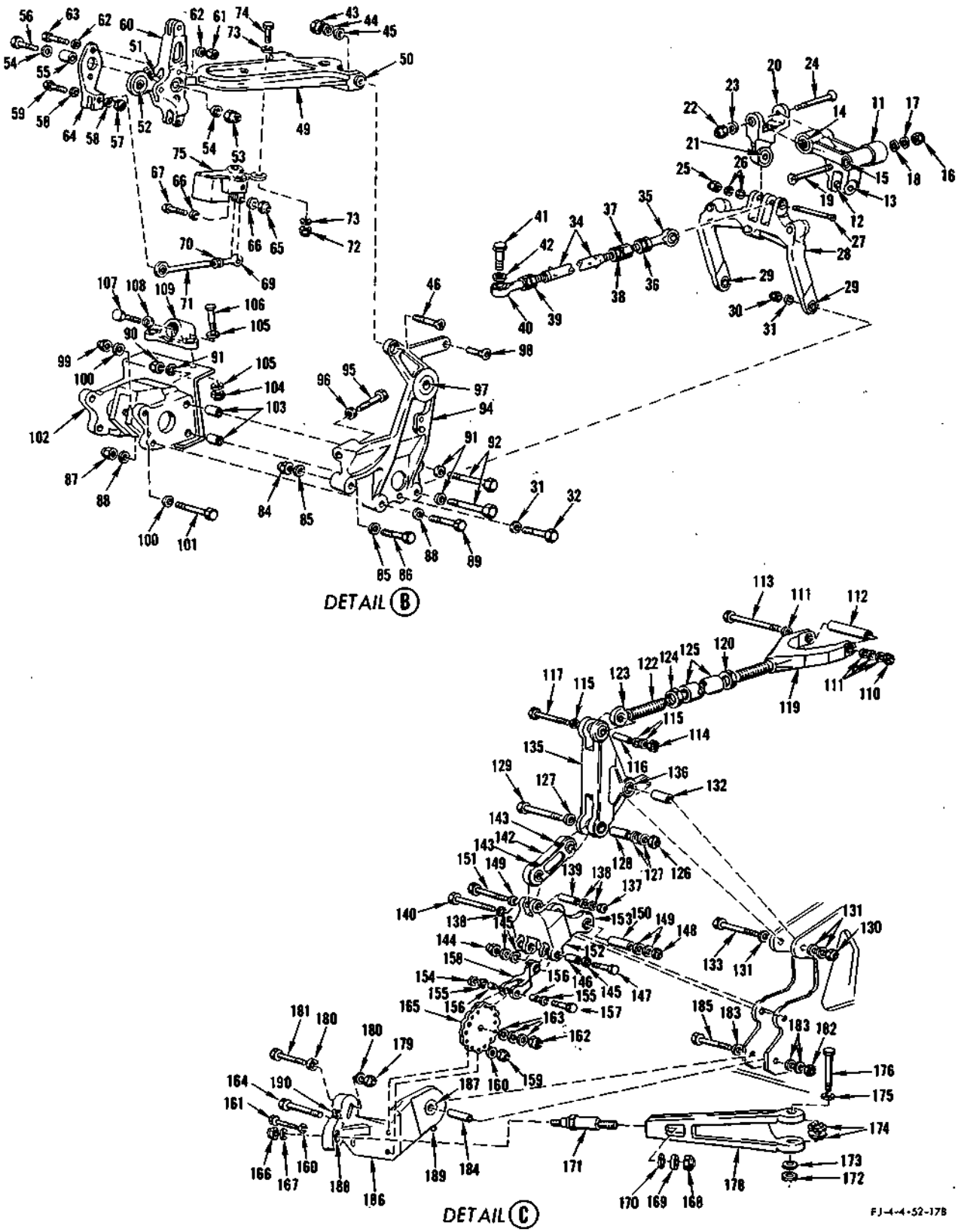

FIGURE 182 - HORIZONTAL STABILIZER CONTROL AFT FUSELAGE (STA 236.25 TO 429) - APPLICABLE TO AIRCRAFT CODED (ET) (SHEET 2)

HORIZONTAL STABILIZER CONTROL AFT FUSELAGE (STA 236.25 TO 429) - APPLICABLE TO AIRCRAFT CODED (ET)

FIGURE & INDEX NO.	PART NUMBER	1 2 3 4 5 6 7 NOMENCLATURE	UNITS PER ASSY.	USABLE ON CODE	S/C NO.
182-1	1207-001	QUICK DISCONNECT (Bohanan Mfg Co) (98940)	4	ET	
-2	AN219-2	PULLEY (nose up and nose down)	4	ET	
	ATTACHING PARTS				
	AN4-10A	BOLT	4	ET	
	2W18-416	WASHER, Flat (NA) (89372)	8	ET	
	AN365-428	NUT	4	ET	
	---*---				
-3	209-52292	CABLE ASSEMBLY, Horizontal stabilizer control aft fuselage nose down	2	ET	
	AN664C3	. TERMINAL	1	ET	
	AN669L3LH	. TERMINAL	1	ET	
-4	209-52291	CABLE ASSEMBLY, Horizontal stabilizer control aft fuselage nose up	2	ET	
	AN664C3	. TERMINAL	2	ET	
-5	AN219-2A	PULLEY (nose down)	2	U	
-6	AN219-4A	PULLEY (nose down)	2	GA	
-7	AN219-4A	PULLEY (nose up)	2	ET	
	ATTACHING PARTS				
	AN4-14A	BOLT	4	ET	
	2W18-416	WASHER, Flat (NA) (89372)	8	ET	
	AN365-428	NUT	4	ET	
	---*---				
-8	209-52237	SECTOR, Horizontal stabilizer control rear fuselage	1	ET	
-9	209-52248	BALANCE WEIGHT, Horizontal stabilizer control sector	1	ET	
	ATTACHING PARTS				
	NAS334CPA31	BOLT	2	ET	
	2W18-416	. WASHER, Flat (NA) (89372)	2	ET	
	AN365-428	NUT	2	ET	
	---*---				
	4B1984-020	. BUSHING, Press fit plain (NA) (89372)	2	ET	
-10	AN174-15A	BOLT (RH attaching)	1	ET	
	AN174-21A	BOLT (LH attaching)	1	ET	
	2W18-416	WASHER, Flat (NA) (89372) (RH attaching)	1	ET	
	2W18-416M	WASHER, Flat (NA) (89372) (one required RH attaching under bolthead)	3	ET	
	S-1452-048	NUT, Barrel (EN) (72962) (RH attaching)	1	ET	
	AN365-428	NUT (LH attaching)	1	ET	
	209-52239-11	LINK ASSEMBLY, Horizontal stabilizer control bungee	1	ET	
-11	209-52239-3	. FITTING, Horizontal stabilizer control bungee link assembly	1	ET	
-12	4B2084-004	. BUSHING, Press fit flanged (NA) (89372)	1	ET	
-13	4B2084-006	. BUSHING, Press fit flanged (NA) (89372)	1	ET	
-14	AN201KP4A	. BEARING	2	ET	
	4S7-4-0.599	. SPACER, Flanged dual bearing (NA) (89372)	1	ET	
	4S7-4-1.055	. SPACER, Flanged dual bearing (NA) (89372)	1	ET	
-15	209-52239-15	. LINK SUBASSEMBLY, Horizontal stabilizer control bungee	1	ET	
	DPP4	. . BEARING (FAF) (21335)	1	ET	
	209-52246-5	. . RETAINER, Horizontal stabilizer control link thrust bearing	1	ET	
	209-52239-13	. LINK SUBASSEMBLY, Horizontal stabilizer control bungee	1	ET	
	DPP4	. . BEARING (FAF) (21335)	1	ET	
	209-52246-3	. . RETAINER, Horizontal stabilizer control link thrust bearing	1	ET	
-16	AN365-428	. NUT	1	ET	
-17	2W18-416	. WASHER, Flat (NA) (89372)	1	ET	
-18	2W18-416M	. WASHER, Flat (NA) (89372)	1	ET	
-19	NAS334PA31	. BOLT	1	ET	
-20	209-52240-11	LINK ASSEMBLY, Horizontal stabilizer control valve	1	ET	
	209-52240-3	. LINK, Horizontal stabilizer control valve link assembly	1	ET	
	4B20-54-008	. BUSHING, Press fit flanged (NA) (89372)	1	ET	
-21	AN200KS4	. BEARING	1	ET	
-22	AN365-428	NUT	1	ET	
-23	2W18-416M	WASHER, Flat (NA) (89372)	1	ET	
-24	NAS334PA24	BOLT	1	ET	
-25	AN365-428	NUT	1	ET	
-26	2W18-416M	WASHER, Flat (NA) (89372)	2	ET	
-27	NAS334PA20	BOLT	1	ET	
-28	209-52241-11	IDLER ASSEMBLY, Horizontal stabilizer control valve	1	ET	
	209-52241-3	. IDLER, Horizontal stabilizer control valve idler assembly	1	ET	
-29	KS4A	. BEARING (FAF) (21335)	2	ET	
	1P7	. PLUG, Control stop (NA) (89372)	3	ET	
-30	AN365-428	NUT	2	ET	
-31	2W18-416	WASHER, Flat (NA) (89372)	4	ET	
-32	AN174-11A	BOLT	2	ET	
-33	209-52235	ROD ASSEMBLY, Horizontal stabilizer control valve operating	1	ET	
-34	209-52235-11	. ROD SUBASSEMBLY, Horizontal stabilizer control valve operating	1	ET	
	209-52235-3	. . TUBE, Horizontal stabilizer control valve operating rod subassembly	1	ET	
	209-52275	. . ROD END, Horizontal stabilizer control valve operating	1	ET	
	1R12-10-035-524	. . RIVETING ROD END, Threaded (NA) (89372)	1	ET	
-35	RE4F5-2	. ROD END (FAF) (21335)	1	ET	
-36	1N7-5A	. NUT, Check (NA) (89372)	1	ET	
-37	209-52296	. ADAPTER, Horizontal stabilizer control valve actuating rod	1	ET	
-38	1N7-5LA	. NUT, Check (NA) (89372)	1	ET	
-39	AN316-5	. NUT	1	ET	
-40	RE4F5	. ROD END (FAF) (21335)	1	ET	
-41	AN174A12A	. BOLT	1	ET	
-42	2W18-416	. WASHER, Flat (NA) (89372)	1	ET	
-43	AN365-428	NUT	2	ET	
-44	2W18-416	WASHER, Flat (NA) (89372)	2	ET	

HORIZONTAL STABILIZER CONTROL AFT FUSELAGE (STA 236.25 TO 429) - APPLICABLE TO AIRCRAFT CODED (ET)

FIGURE & INDEX NO.	PART NUMBER	1 2 3 4 5 6 7 NOMENCLATURE	UNITS PER ASSY.	USABLE ON CODE	S/C NO.
182-45	2W18-416M	WASHER, Flat (NA) (89372)	2	ET	
-46	NAS334PA12	BOLT	2	ET	
-47	AN365-428	NUT	1	ET	
	2W18-416	WASHER, Flat (NA) (89372)	2	ET	
	AN4-13A	BOLT	1	ET	
-48	209-52236-5	FORK ASSEMBLY, Horizontal stabilizer control trim actuator support	1	ET	
-49	209-52236-3	. FORK, Horizontal stabilizer control trim actuator support fork assembly	1	ET	
-50	4B20M-S4-009	. BUSHING, Press fit flanged (NA) (89372)	2	ET	
	4B20M-S8-010	. BUSHING, Press fit flanged (NA) (89372)	2	ET	
-51	MS15001-1	. FITTING, Lubrication	1	ET	
	209-14211-5	. FITTING, Injection extension	1	ET	
-52	AN200KS4	. BEARING	2	ET	
-53	AN310-6	NUT	1	ET	
-54	2W18-616	WASHER, Flat (NA) (89372)	2	ET	
-55	4B21M-S6-028	BUSHING, Spacer (NA) (89372)	1	ET	
-56	AN176-17	BOLT	1	ET	
-57	AN365-1032	NUT	1	ET	
-58	2W18-10	WASHER, Flat (NA) (89372)	2	ET	
-59	AN173-12A	BOLT	1	ET	
-60	209-52242-3	BELLCRANK, Horizontal stabilizer control bungee trim	1	ET	
-61	AN365-1032	NUT	2	ET	
-62	2W18-10M	WASHER, Flat (NA) (89372)	4	ET	
-63	AN3-17A	BOLT	2	ET	
-64	209-52556	CLEVIS, Stick force control follow-up bellcrank	1	ET	
-65	AN364-1032	NUT	1	ET	
-66	2W18-10M	WASHER, Flat (NA) (89372)	2	ET	
-67	NAS464-3-7	BOLT (install head outboard)	1	ET	
-68	209-52554	LINK ASSEMBLY, Stick force controller drive (supersedes 209-52516 for future procurement)	1	ET	
-69	209-52528	. ROD END, Stick force controller follow-up	1	ET	
-70	209-52517	. NUT, Stick force controller follow-up	1	ET	
-71	209-52555	. LINK ASSEMBLY, Stick force follow-up drive	1	ET	
	AN200KS3L	. . BEARING	1	ET	
-72	AN365-1032	NUT	3	ET	
-73	2W18-10	WASHER, Flat (NA) (89372)	6	ET	
-74	AN3-10A	BOLT	3	ET	
-75	ED602	BOX ASSEMBLY, Mach trimmer control (NAQ) (88978)	1	ET	
-76	AN4-20A	BOLT	1	ET	
	AN365-428	NUT	1	ET	
-77	209-52290	LINK, Horizontal stabilizer trim actuator support	1	ET	
-78	AN365-428	NUT	1	ET	
	2W18-416M	WASHER, Flat (NA) (89372)	2	ET	
	AN174-12A	BOLT	1	ET	
-79	AN310-4	NUT	1	ET	
	2W18-416	WASHER, Flat (NA) (89372)	1	ET	
	NAS334P12	BOLT	1	ET	
-80	38090-2	ACTUATOR, Stabilizer bungee trim (AIR) (99193) (supersedes 38090, 38090-1 (AIR) (99193) and D-1850-1 (HOOV) (81817) for future procurement)	1	ET	
-81	209-52218-31	BUNGEE ASSEMBLY, Horizontal stabilizer control feel (see figure 177 for complete breakdown)	1	ET	
-82	AN365-428	NUT	1	ET	
	2W18-416	WASHER, Flat (NA) (89372)	1	ET	
	2W18-416M	WASHER, Flat (NA) (89372) (use under bolthead)	1	ET	
	AN174-12A	BOLT	1	ET	
-83	AN365-428	NUT	1	ET	
	2W18-416M	WASHER, Flat (NA) (89372)	2	ET	
	AN174-12A	BOLT	1	ET	
-84	AN363-624	NUT	2	ET	
-85	2W17-616M	WASHER, Corrosion-resistant steel (NA) (89372)	4	ET	
-86	AN176-20A	BOLT	2	ET	
-87	AN363-624	NUT	2	ET	
-88	2W17-616	WASHER, Corrosion-resistant steel (NA) (89372)	4	ET	
-89	AN176-24A	BOLT	2	ET	
-90	AN363-624	NUT	4	ET	
-91	2W17-616	WASHER, Corrosion-resistant steel (NA) (89372)	8	ET	
-92	AN176-74A	BOLT	4	ET	
-93	209-52243-12	SUPPORT ASSEMBLY, Horizontal stabilizer control sector RH	1	ET	
-94	209-52243-4	. SUPPORT, Horizontal stabilizer control sector support assembly RH	1	ET	
-95	NAS428KH4-12	. BOLT	1	ET	
-96	1N7-4A	. NUT, Check (NA) (89372)	1	ET	
	RL28SB-8	. RING (ROSN) (83324)	1	ET	
	RD208SB-65L	. INSERT (ROSN) (83324)	1	ET	
-97	AN200KS4	. BEARING	1	ET	
-98	209-52249	. BUSHING, Support assembly guard pin	1	ET	
-99	AN363-624	NUT	2	ET	
-100	2W17-616M	WASHER, Corrosion-resistant steel (NA) (89372)	4	ET	
-101	AN176-11A	BOLT	2	ET	
	209-52245-11	SUPPORT ASSEMBLY, Horizontal stabilizer control cylinder	1	ET	
-102	209-52245-3	. SUPPORT, Horizontal stabilizer control cylinder support assembly	1	ET	
-103	209-52247	. BUSHING, Horizontal stabilizer control cylinder support	4	ET	
-104	AN363-428	NUT	2	ET	
-105	2W17-416	WASHER, Corrosion-resistant steel (NA) (89372)	4	ET	
-106	AN174-10A	BOLT	2	ET	

HORIZONTAL STABILIZER CONTROL AFT FUSELAGE (STA 236.25 TO 429) - APPLICABLE TO AIRCRAFT CODED (ET)

FIGURE & INDEX NO.	PART NUMBER	1 2 3 4 5 6 7 NOMENCLATURE	UNITS PER ASSY.	USABLE ON CODE	S/C NO.
182-107	NAS428KH4-10	BOLT	1	ET	
-108	1N7-4A	NUT, Check (NA) (89372)	1	ET	
-109	209-52238	STOP ASSEMBLY, Horizontal stabilizer control idler	1	ET	
	RL28SB-8	. RING (ROSN) (83324)	1	ET	
	RD206SB-6.5L	. INSERT (ROSN) (83324)	1	ET	
-110	AN310-5	NUT	1	ET	
-111	2W18-516	WASHER, Flat (NA) (89372)	4	ET	
-112	209-52261-5	BUSHING, Elevator control linkage rotation	1	ET	
-113	AN175-33	BOLT	1	ET	
-114	AN320-5	NUT	1	ET	
-115	2W18-516	WASHER, Flat (NA) (89372)	3	ET	
-116	209-52261-15	BUSHING, Elevator control linkage rotation	1	ET	
-117	NAS464-5-19	BOLT	1	ET	
-118	209-52256	LINK ASSEMBLY, Elevator control upper adjustable	1	ET	
-119	209-52259-5	. FORK ASSEMBLY, Elevator control	1	ET	
	209-52259-3	. . FORK, Elevator control fork assembly	1	ET	
	4B19M-S5-006	. . BUSHING, Press fit plain (NA) (89372)	2	ET	
-120	209-52262-3	. NUT, Elevator control check	1	ET	
-121	209-52257-5	. ROD ASSEMBLY, Elevator control	1	ET	
-122	209-52257-3	. . ROD, Elevator control rod assembly	1	ET	
-123	NAS516-1	. . FITTING, Lubricator	1	ET	
	209-52260-11	. . BUSHING, Elevator control linkage	1	ET	
-124	209-52262-5	. NUT, Elevator control check	1	ET	
-125	209-52258	. TUBE, Elevator control	1	ET	
	209-21003	STABILIZER ASSEMBLY, Horizontal complete	1	PD	
	209-21003-31	STABILIZER ASSEMBLY, Horizontal complete	1	PC	
-126	AN320-5	. NUT	1	ET	
-127	2W18-516	. WASHER, Flat (NA) (89372)	3	ET	
-128	209-52261-11	. BUSHING, Elevator control linkage rotation	1	ET	
-129	NAS464-5-19	. BOLT	1	ET	
-130	AN320-6	. NUT	1	ET	
-131	2W18-616	. WASHER, Flat (NA) (89372)	3	ET	
-132	209-52261-13	. BUSHING, Elevator control linkage rotation	1	ET	
-133	NAS464-6-27	. BOLT	1	ET	
-134	209-52255-5	. BELLCRANK ASSEMBLY, Elevator control upper	1	ET	
-135	209-52255-3	. . BELLCRANK, Elevator control upper bellcrank assembly	1	ET	
-136	209-52260-9	. . BUSHING, Elevator control linkage	1	ET	
	4B19M-S5-011	. . BUSHING, Press fit plain (NA) (89372) (upper)	2	ET	
	4B19M-S5-008	. . BUSHING, Press fit plain (NA) (89372) (lower)	2	ET	
	NAS516-1	. . FITTING, Lubricator	1	ET	
-137	AN320-5	. NUT	1	ET	
-138	2W18-516	. WASHER, Flat (NA) (89372)	3	ET	
-139	209-52261-11	. BUSHING, Elevator control linkage rotation	1	ET	
-140	NAS464-5-15	. BOLT	1	ET	
-141	209-52254-5	. LINK ASSEMBLY, Elevator control intermediate	1	ET	
-142	209-52254-3	. . LINK, Elevator control intermediate link assembly	1	ET	
	209-52260-13	. . BUSHING, Elevator control linkage	2	ET	
-143	NAS516-1	. . FITTING, Lubricator	2	ET	
-144	AN320-4	. NUT	2	ET	
-145	2W18-416	. WASHER, Flat (NA) (89372)	6	ET	
-146	209-52261-7	. BUSHING, Elevator control linkage rotation	2	ET	
-147	NAS464-4-15	. BOLT	2	ET	
-148	AN320-6	. NUT	1	ET	
-149	2W18-616	. WASHER, Flat (NA) (89372)	3	ET	
-150	209-52261-3	. BUSHING, Elevator control linkage	1	ET	
-151	NAS464-6-39	. BOLT	1	ET	
-152	209-52253-5	. BELLCRANK ASSEMBLY, Elevator control intermediate	1	ET	
	209-52253-3	. . BELLCRANK, Elevator control intermediate bellcrank assembly	1	ET	
	4B19M-S4-006	. . BUSHING, Press fit plain (NA) (89372)	4	ET	
	4B19M-S5-008	. . BUSHING, Press fit plain (NA) (89372)	2	ET	
-153	4B19M-S6-011	. . BUSHING, Press fit plain (NA) (89372)	2	ET	
-154	AN320-4	. NUT	2	ET	
-155	2W18-416	. WASHER, Flat (NA) (89372)	4	ET	
-156	209-52261-9	. BUSHING, Elevator control linkage rotation	4	ET	
-157	NAS464-4-15	. BOLT	2	ET	
-158	209-52252	. LINK ASSEMBLY, Elevator control lower	2	ET	
	209-52252-3	. . LINK, Elevator control lower link assembly	1	ET	
	209-52260-3	. . BUSHING, Elevator control linkage	1	ET	
	209-52260-5	. . BUSHING, Elevator control linkage	2	ET	
	NAS516-1	. . FITTING, Lubricator	3	ET	
-159	AN364-524	. NUT	2	ET	
-160	2W18-516	. WASHER, Flat (NA) (89372)	4	ET	
-161	NAS464-5-9	. BOLT	2	ET	
-162	AN364-720	. NUT	2	ET	
-163	2W18-716	. WASHER, Flat (NA) (89372)	6	ET	
-164	NAS464-7-14	. BOLT	2	ET	
-165	209-52251	. PLATE, Elevator control adjusting	2	ET	
-166	AN310-4	. NUT	2	ET	
-167	2W18-416L	. WASHER, Flat (NA) (89372)	2	ET	
-168	AN310-4	. NUT	2	ET	
-169	2W18-416	. WASHER, Flat (NA) (89372)	2	ET	
-170	2W2SP16-24-125	. WASHER, Thrust (NA) (89372)	2	ET	
-171	209-52265	. SCREW, Elevator control adjustment	2	ET	

HORIZONTAL STABILIZER CONTROL AFT FUSELAGE (STA 236.25 TO 429) - APPLICABLE TO AIRCRAFT CODED (ET)

FIGURE & INDEX NO.	PART NUMBER	1	2	3	4	5	6	7	NOMENCLATURE	UNITS PER ASSY.	USABLE ON CODE	S/C NO.
182-172	AN320-8	.	NUT							2	ET	
-173	2W18-816	.	WASHER, Flat (NA) (89372)							2	ET	
-174	209-52261-21	.	BUSHING, Elevator control linkage rotation (supersedes 209-52261-19 for future procurement)							4	ET	
-175	2W18-816M	.	WASHER, Flat (NA) (89372)							2	ET	
-176	NAS464-8-50	.	BOLT							2	ET	
-177	209-52263-11	.	HORN ASSEMBLY, Elevator control (supersedes 209-52263-5 for future procurement)							2	ET	
-178	209-52263-7	.	.	HORN SUBASSEMBLY, Elevator control (make from 209-52263)						1	ET	
	209-52264-3	.	.	SLEEVE, Elevator control						1	ET	
	209-522364-5	.	.	BUSHING, Elevator control linkage close tolerance flange						4	ET	
	NAS516-1	.	.	FITTING, Lubricator						2	ET	
-179	AN363-428	.	NUT							2	ET	
-180	2W1AL17-20-64	.	WASHER, Plain (NA) (89372)							4	ET	
-181	MS20004-15	.	BOLT							2	ET	
-182	AN320-5	.	NUT							1	ET	
-183	2W18-516	.	WASHER, Flat (NA) (89372)							3	ET	
-184	209-52261-17	.	BUSHING, Elevator control linkage rotation							1	ET	
-185	NAS464-5-27	.	BOLT							1	ET	
-186	209-52250-6	.	ARM ASSEMBLY, Elevator control RH							1	ET	
	209-52250-4	.	.	ARM, Elevator control arm assembly RH						1	ET	
	209-52250-5	.	ARM ASSEMBLY, Elevator control LH							1	ET	
	209-52250-3	.	.	ARM, Elevator control arm assembly LH						1	ET	
-187	209-52260-15	.	.	BUSHING, Elevator control linkage						1	ET	
-188	HSBG-55	.	.	BEARING (HLF) (97613)						1	ET	
	NAS50-77	.	.	RING						1	ET	
-189	MS15001-4	.	.	FITTING, Lubrication						1	ET	
-190	MS15001-3	.	.	FITTING, Lubrication						1	ET	

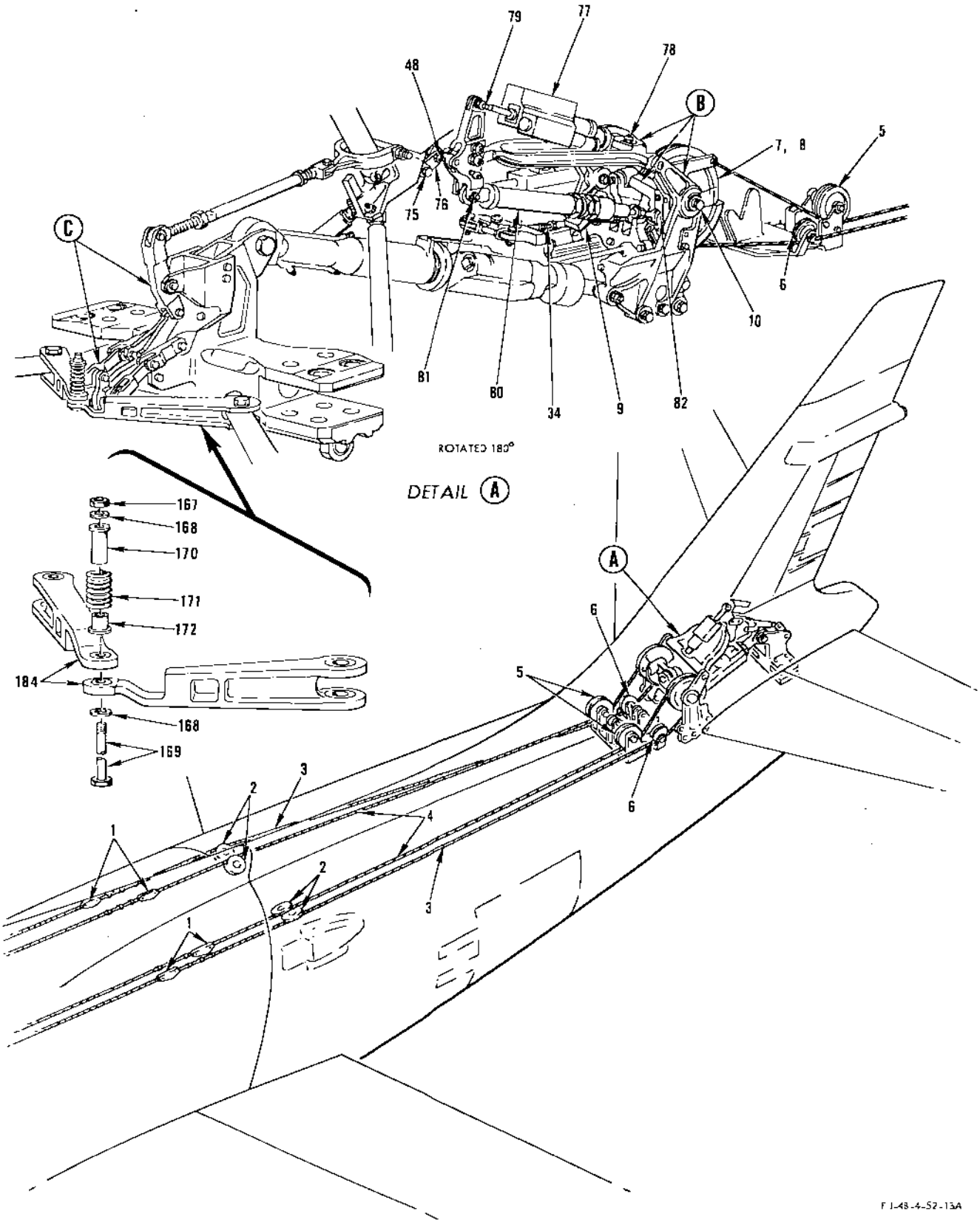

FIGURE 183 - HORIZONTAL STABILIZER CONTROL AFT FUSELAGE (STA 236.25 TO 429) - APPLICABLE TO AIRCRAFT CODED (FR) (Sheet 1)

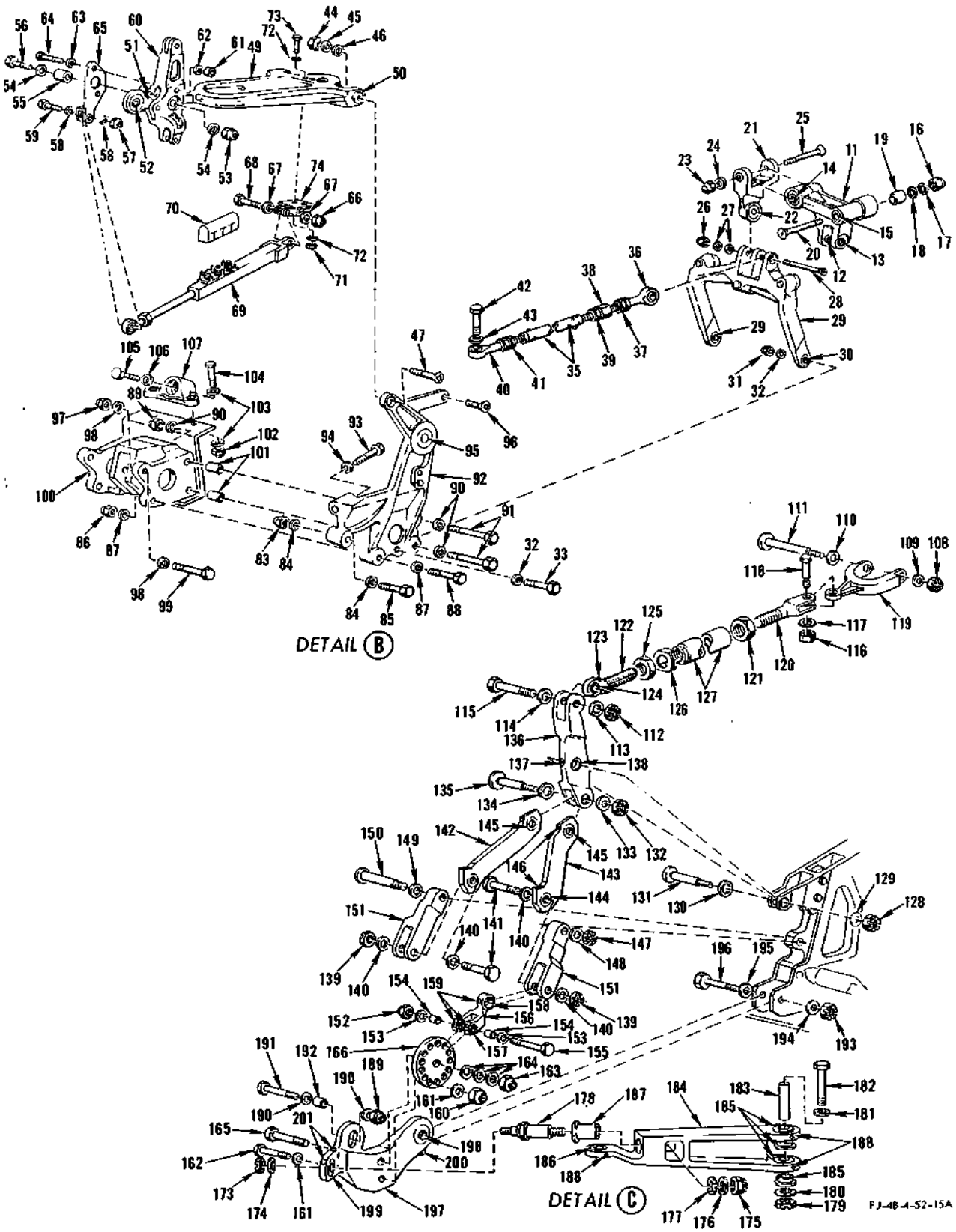

FIGURE 183 - HORIZONTAL STABILIZER CONTROL AFT FUSELAGE (STA 236.25 TO 429) - APPLICABLE TO AIRCRAFT CODED (FR) (Sheet 2)

HORIZONTAL STABILIZER CONTROL AFT FUSELAGE (STA 236.25 TO 429) - APPLICABLE TO AIRCRAFT CODED (FR)

FIGURE & INDEX NO.	PART NUMBER	1 2 3 4 5 6 7 NOMENCLATURE	UNITS PER ASSY.	USABLE ON CODE	S/C NO.
183-1	1207-001	QUICK DISCONNECT (Bohanan Mfg Co) (98940)	4	FR	
-2	AN219-2	PULLEY (stabilizer nose up and nose down station 246)	4	FR	
	ATTACHING PARTS				
	AN4-10A	BOLT	4	FR	
	2W18-416	WASHER, Flat (NA) (89372)	8	FR	
	AN365-428	NUT	4	FR	
	---*---				
-3	209-52292	CABLE ASSEMBLY, Horizontal stabilizer control aft fuselage nose down	2	FR	
	AN664C3	. TERMINAL	1	FR	
	AN669L3LH	. TERMINAL	1	FR	
	209-52292-3	. CABLE SUBASSEMBLY, Horizontal stabilizer control aft fuselage nose down	1	FR	
-4	209-52291	CABLE ASSEMBLY, Horizontal stabilizer control aft fuselage nose up	2	FR	
	AN664C3	. TERMINAL	2	FR	
	209-52291-3	. CABLE SUBASSEMBLY, Horizontal stabilizer control aft fuselage nose up	1	FR	
-5	AN219-4A	PULLEY (stabilizer nose up)	2	FR	
-6	AN219-4A	PULLEY (stabilizer nose down)	2	FR	
	ATTACHING PARTS				
	AN4-14A	BOLT	4	FR	
	2W18-416	WASHER, Flat (NA) (89372)	8	FR	
	AN365-428	NUT	4	FR	
	---*---				
-7	209-52237	SECTOR, Horizontal stabilizer control rear fuselage (superseded by 209-52230-11 together with 4B21S4-16 (NA) (89372) for future procurement)	1	KX	
-8	209-52237-11	SECTOR, Horizontal stabilizer control rear fuselage (209-52237-11 together with 4B21S4-16 (NA) (89372) supersedes 209-52237 for future procurement)	1	KY	
-9	209-52248	BALANCE WEIGHT, Horizontal stabilizer control sector	1	FR	
	ATTACHING PARTS				
	NAS334CPA31	BOLT	2	FR	
	2W18-416	WASHER, Flat (NA) (89372)	2	FR	
	AN365-428	NUT	2	FR	
	---*---				
	4B19S4-020	. BUSHING, Press fit plain (NA) (89372)	2	FR	
-10	AN174-15A	BOLT (RH attaching)	1	FR	
	AN174-21A	BOLT (LH attaching)	1	FR	
	2W18-416	WASHER, Flat (NA) (89372) (RH attaching)	1	FR	
	2W18-416M	WASHER, Flat (NA) (89372) (1 required RH attaching under bolthead)	3	FR	
	S-1452-048	NUT, Barrel (EN) (72962) (RH attaching)	1	FR	
	AN365-428	NUT (LH attaching)	1	FR	
	209-52239-11	LINK ASSEMBLY, Horizontal stabilizer control bungee	1	FR	
-11	209-52239-3	. FITTING, Horizontal stabilizer control bungee link assembly	1	FR	
-12	4B20S4-004	. BUSHING, Press fit flanged (NA) (89372)	1	FR	
-13	4B20S4-006	. BUSHING, Press fit flanged (NA) (89372)	1	FR	
-14	AN201KP4A	. BEARING	2	FR	
	4S7-4-0.599	. SPACER, Flanged dual bearing (NA) (89372)	1	FR	
	4S7-4-1.005	. SPACER, Flanged dual bearing (NA) (89372)	1	FR	
-15	209-52239-15	. LINK SUBASSEMBLY, Horizontal stabilizer control bungee	1	FR	
	DPP4	. . BEARING (FAF) (21335)	1	FR	
	209-52246-5	. . RETAINER, Horizontal stabilizer control link thrust bearing	1	FR	
	209-52239-13	. LINK SUBASSEMBLY, Horizontal stabilizer control bungee	1	FR	
	DPP4	. . BEARING (FAF) (21335)	1	FR	
	209-52246-3	. . RETAINER, Horizontal stabilizer control link thrust bearing	1	FR	
-16	AN365-428	NUT	1	FR	
-17	2W18-416	WASHER, Flat (NA) (89372)	1	FR	
-18	2W18-416M	WASHER, Flat (NA) (89372)	1	FR	
-19	4B21S4-16	BUSHING, Spacer (NA) (89372) (4B21S4-16 together with 209-52237-11 supersedes 209-52237 for future procurement)	1	KY	
-20	NAS334PA31	BOLT	1	FR	
-21	209-52240-11	LINK ASSEMBLY, Horizontal stabilizer control valve	1	FR	
	209-52240-3	. LINK, Horizontal stabilizer control valve link assembly	1	FR	
	4B20M-S4-008	. BUSHING, Press fit flanged (NA) (89372)	1	FR	
-22	AN200KS4	. BEARING	1	FR	
-23	AN365-428	NUT	2	FR	
-24	2W18-416M	WASHER, Flat (NA) (89372)	1	FR	
-25	NAS334PA24	BOLT	1	FR	
-26	AN365-428	NUT	1	FR	
-27	2W18-416M	WASHER, Flat (NA) (89372)	2	FR	
-28	NAS334PA13	BOLT	1	FR	
-29	209-52241-11	IDLER ASSEMBLY, Horizontal stabilizer control valve	1	FR	
	209-52241-3	. IDLER, Horizontal stabilizer control valve idler assembly	1	FR	
-30	KS4A	. BEARING (FAF) (21335)	2	FR	
	1P7	. PLUG, Control stop (NA) (89372)	2	FR	
-31	AN365-428	NUT	1	FR	
-32	2W18-416	WASHER, Flat (NA) (89372)	2	FR	
-33	AN174-11A	BOLT	1	FR	
-34	209-52235	ROD ASSEMBLY, Horizontal stabilizer control valve operating	1	FR	
-35	209-52235-11	. ROD SUBASSEMBLY, Horizontal stabilizer control valve operating	1	FR	
	209-52235-3	. . TUBE, Horizontal stabilizer control valve operating rod subassembly	1	FR	
	209-52275	. . ROD END, Horizontal stabilizer control valve operating	1	FR	
	1R12-10-035-524	. . RIVETING ROD END, Threaded (NA) (89372)	1	FR	
-36	RE45-2	. ROD END (FAF) (21335)	1	FR	
-37	1N7-5A	. NUT, Check (NA) (89372)	1	FR	
-38	209-52296	. ADAPTER, Horizontal stabilizer control valve actuating rod	1	FR	

HORIZONTAL STABILIZER CONTROL AFT FUSELAGE (STA 236.25 TO 429) - APPLICABLE TO AIRCRAFT CODED (FR)

FIGURE & INDEX NO.	PART NUMBER	1 2 3 4 5 6 7 NOMENCLATURE	UNITS PER ASSY.	USABLE ON CODE	S/C NO.
183-39	1N7-5LA	. NUT, Check (NA) (89372)	1	FR	
-40	RE4F5	. ROD END (FAF) (21335)	1	FR	
-41	AN316-5	. NUT	1	FR	
-42	AN174A12A	BOLT	1	FR	
-43	2W18-416	WASHER, Flat (NA) (89372)	1	FR	
-44	AN365-428	NUT	2	FR	
-45	2W18-416	WASHER, Flat (NA) (89372)	2	FR	
-46	2W18-416M	WASHER, Flat (NA) (89372)	2	FR	
-47	NAS334P412	BOLT	2	FR	
-48	AN365-428	NUT	1	FR	
	2W18-416	WASHER, Flat (NA) (89372)	2	FR	
	AN4-13A	BOLT	1	FR	
-49	209-52236-9	FORK ASSEMBLY, Horizontal stabilizer control trim actuator support	1	FR	
	209-52236-7	. FORK, Horizontal stabilizer control trim actuator support fork assembly	1	FR	
-50	4B20M-S4-009	. BUSHING, Press fit flanged (NA) (89372)	2	FR	
	4B20M-S8-018	. BUSHING, Press fit flanged (NA) (89372)	2	FR	
-51	MS15001-1	. FITTING, Lubrication	1	FR	
	209-14211-5	. FITTING, Injection extension	1	FR	
-52	AN200KS4	. BEARING	2	FR	
-53	AN310-6	NUT	1	FR	
-54	2W18-616	WASHER, Flat (NA) (89372)	2	FR	
-55	4B21M-S6-028	BUSHING, Spacer (NA) (89372)	1	FR	
-56	AN176-17	BOLT	1	FR	
-57	AN365-1032	NUT	1	FR	
-58	2W18-10M	WASHER, Flat (NA) (89372)	2	FR	
-59	AN173A7	BOLT	1	FR	
-60	209-52242-3	BELLCRANK, Horizontal stabilizer control bungee trim	1	FR	
-61	AN365-1032	NUT	2	FR	
-62	2W18-10	WASHER, Flat (NA) (89372)	2	FR	
-63	2W18-10M	WASHER, Flat (NA) (89372)	2	FR	
-64	AN3-17A	BOLT	2	FR	
-65	209-522216	ARM, Mach position trim follow-up potentiometer	1	FR	
-66	AN365-1032	NUT	1	FR	
-67	2W18-10M	WASHER, Flat (NA) (89372)	2	FR	
-68	AN173A7	BOLT	1	FR	
-69	ANB451	POTENTIOMETER (type 910) (FAC) (72314)	1	FR	
-70	209-54721	COVER, Mach and position trim potentiometer	1	FR	
-71	AN365-1032	NUT	2	FR	
-72	2W18-10	WASHER, Flat (NA) (89372)	4	FR	
-73	AN3-16	BOLT	2	FR	
-74	209-522215	FITTING, Mach position trim follow-up potentiometer	1	FR	
-75	AN4-20A	BOLT	1	FR	
	2W18-416	WASHER, Flat (NA) (89372)	2	FR	
	AN365-428	NUT	1	FR	
-76	209-52290	LINK, Horizontal stabilizer trim actuator support	1	FR	
-77	38090-1	ACTUATOR, Stabilizer bungee trim (AIR) (99193) (superseded by 38090-2 (AIR) (99193) for future procurement)	1	FR	
	38090-2	ACTUATOR, Stabilizer bungee trim (AIR) (99193) (supersedes 38090-1 (AIR) (99193) for future procurement)	1	FR	
-78	AN365-428	NUT	1	FR	
	2W18-416M	WASHER, Flat (NA) (89372)	2	FR	
	AN174-12A	BOLT	1	FR	
-79	AN310-4	NUT	1	FR	
	2W18-416	WASHER, Flat (NA) (89372)	1	FR	
	NAS334P12	BOLT	1	FR	
-80	209-52218-41	BUNGEE ASSEMBLY, Horizontal stabilizer control feel (see figure 177 for complete breakdown)	1	FR	
-81	AN365-428	NUT	1	FR	
	2W18-416	WASHER, Flat (NA) (89372) (use under nut)	1	FR	
	2W18-416M	WASHER, Flat (NA) (89372) (use under bolthead)	1	FR	
	AN174-12A	BOLT	1	FR	
-82	AN365-428	NUT	1	FR	
	2W18-416M	WASHER, Flat (NA) (89372)	2	FR	
	AN174-12A	BOLT	1	FR	
-83	AN363-624	NUT	2	FR	
-84	2W17-616M	WASHER, Corrosion-resistant steel (NA) (89372)	4	FR	
-85	AN176-20A	BOLT	2	FR	
-86	AN363-624	NUT	2	FR	
-87	2W17-616	WASHER, Corrosion-resistant steel (NA) (89372)	4	FR	
-88	AN176-24A	BOLT	2	FR	
-89	AN363-624	NUT	4	FR	
-90	2W17-616	WASHER, Corrosion-resistant steel (NA) (89372)	8	FR	
-91	AN176-74A	BOLT	4	FR	
-92	209-52243-12	SUPPORT ASSEMBLY, Horizontal stabilizer control sector RH	1	FR	
	209-52243-11	SUPPORT ASSEMBLY, Horizontal stabilizer control sector LH	1	FR	
	209-52243-4	. SUPPORT, Horizontal stabilizer control sector support assembly RH	1	FR	
	209-52243-3	. SUPPORT, Horizontal stabilizer control sector support assembly LH	1	FR	
-93	NAS428KH4-12	. BOLT	1	FR	
-94	1N7-4A	. NUT, Check (NA) (89372)	1	FR	
	RL28SB-8	. RING (ROSN) (83324)	1	FR	
	RD206SB-6.52	. INSERT (ROSN) (83324)	1	FR	
-95	AN200KS4	. BEARING	1	FR	
-96	209-52249	. BUSHING, Support assembly guard pin	1	FR	

HORIZONTAL STABILIZER CONTROL AFT FUSELAGE (STA 236.25 TO 429) - APPLICABLE TO AIRCRAFT CODED (FR)

FIGURE & INDEX NO.	PART NUMBER	1 2 3 4 5 6 7 NOMENCLATURE	UNITS PER ASSY.	USABLE ON CODE	S/C NO.
183-97	AN363-624	NUT	2	FR	
-98	2W17-616M	WASHER, Corrosion-resistant steel (NA) (89372)	4	FR	
-99	AN176-11A	BOLT	2	FR	
	209-52245-11	SUPPORT ASSEMBLY, Horizontal stabilizer control cylinder	1	FR	
-100	209-52245-3	. SUPPORT, Horizontal stabilizer control cylinder support assembly	1	FR	
-101	209-52247	. BUSHING, Horizontal stabilizer control cylinder support	4	FR	
-102	AN363-428	NUT	2	FR	
-103	2W17-416	WASHER, Corrosion-resistant steel (NA) (89372)	4	FR	
-104	AN174-10A	BOLT	2	FR	
-105	NAS428KH4-10	BOLT	1	FR	
-106	1N7-4A	NUT, Check (NA) (89372)	1	FR	
-107	209-52239	STOP ASSEMBLY, Horizontal stabilizer control idler	1	FR	
	RL28SB-8	. RING (ROSN) (83324)	1	FR	
	RD206SB-6.5L	. INSERT (ROSN) (83324)	1	FR	
-108	AN320-4	NUT	1	FR	
-109	2W18-416	WASHER, Flat (NA) (89372)	1	FR	
-110	2W18-716M	WASHER, Flat (NA) (89372)	1	FR	
-111	209-522350-7	BOLT, Deboosting elevator control 7/16 diameter	1	FR	
-112	AN320-5	NUT	1	FR	
-113	2W18-616	WASHER, Flat (NA) (89372)	1	FR	
-114	2W18-616M	WASHER, Flat (NA) (89372)	1	FR	
-115	NAS464P6-14	BOLT	1	FR	
	209-522358	LINK ASSEMBLY, Elevator control upper adjusting	1	FR	
-116	AN320-7	. NUT	1	FR	
-117	2W18-716	. WASHER, Flat (NA) (89372)	1	FR	
-118	209-522363	. BOLT, Elevator control upper adjusting self aligning link	1	FR	
-119	209-522354-3	. FORK, Elevator control self aligning	1	FR	
-120	209-522355-3	. FORK, Elevator control upper adjusting self aligning intermediate	1	FR	
-121	209-52262-3	. NUT, Elevator control check	1	FR	
-122	209-522357	. ROD END, Elevator control upper adjusting self aligning assembly of	1	FR	
-123	NAS516-1	. . FITTING, Lubricator	1	FR	
-124	HSBG-6SA	. . BEARING (HLF) (97613)	1	FR	
-125	209-52262-5	. NUT, Elevator control check	1	FR	
-126	2W15-10	. WASHER, Lock (NA) (89372)	1	FR	
-127	209-522356	. TUBE, Elevator control	1	FR	
	209-21003-11	STABILIZER ASSEMBLY, Horizontal complete	1	FR	
-128	AN320-5	. NUT	1	FR	
-129	2W1AL21-20-32	. WASHER, Plain (NA) (89372)	1	FR	
-130	2W1AL37-25-32	. WASHER, Plain (NA) (89372)	1	FR	
-131	209-522353	. BOLT, Deboosting elevator control 9/16 diameter	1	FR	
-132	AN320-4	. NUT	1	FR	
-133	2W18-416	. WASHER, Flat (NA) (89372)	1	FR	
-134	2W18-716M	. WASHER, Flat (NA) (89372)	1	FR	
-135	209-522350-3	. BOLT, Deboosting elevator control 7/16 diameter	1	FR	
-136	209-522346-11	. BELLCRANK, Deboosting elevator control upper assembly of	1	FR	
-137	NAS516-1	. . FITTING, Lubricator	1	FR	
-138	209-522359-3	. . BUSHING, Elevator control linkage close tolerance rotation	1	FR	
-139	AN320-5	. NUT	2	FR	
-140	2W18-616M	. WASHER, Flat (NA) (89372)	4	FR	
-141	NAS464-6-18	. BOLT	2	FR	
-142	209-522380-1	. LINK, Elevator control intermediate split upper assembly of LH	1	FR	
-143	209-522380-2	. LINK, Elevator control intermediate split upper assembly of RH	1	FR	
-144	209-522359-21	. . BUSHING, Elevator control linkage close tolerance rotation	1	FR	
-145	209-522359-19	. . BUSHING, Elevator control linkage close tolerance rotation	1	FR	
-146	NAS516-1	. . FITTING, Lubricator	2	FR	
-147	AN320-5	. NUT	1	FR	
-148	2W18-516	. WASHER, Flat (NA) (89372)	1	FR	
-149	2W1AL33-24-32	. WASHER, Plain (NA) (89372)	1	FR	
-150	209-522361	. BOLT, Deboosting elevator control close tolerance (superseded by 209-522361-3 for future procurement)	1	FR	
	209-522361-3	. BOLT, Deboosting elevator control close tolerance (supersedes 209-522361 for future procurement)	1	FR	
-151	209-522379	. BELLCRANK, Elevator control intermediate split	2	FR	
-152	AN320-5	. NUT	2	FR	
-153	2W18-516	. WASHER, Flat (NA) (89372)	4	FR	
-154	209-522360	. BUSHING, Elevator control linkage close tolerance	4	FR	
-155	209-522362	. BOLT, Deboosting elevator control close tolerance	2	FR	
-156	209-522348-11	. LINK, Deboosting elevator control lower assembly	2	FR	
-157	209-522359-11	. . BUSHING, Elevator control linkage close tolerance rotation	2	FR	
-158	209-522359-17	. . BUSHING, Elevator control linkage close tolerance rotation	1	FR	
-159	NAS516-1	. . FITTING, Lubricator	3	FR	
-160	AN364-524	. NUT	2	FR	
-161	2W18-516	. WASHER, Flat (NA) (89372)	4	FR	
-162	NAS464-5-9	. BOLT	2	FR	
-163	AN364-720	. NUT	2	FR	
-164	2W18-716	. WASHER, Flat (NA) (89372)	6	FR	
-165	NAS464-7-14	. BOLT	2	FR	
-166	209-52251-3	. PLATE, Elevator control adjusting	2	FR	
-167	1N7-4A	. NUT, Check (NA) (89372)	1	FR	
-168	2W18-416M	. WASHER, Flat (NA) (89372)	2	FR	
-169	209-522382	. BOLT, Preload elevator linkage	1	FR	
-170	209-522375	. PISTON, Elevator linkage spring adjusting	1	FR	
-171	209-522373	. SPRING, Close tolerance compression	1	FR	

HORIZONTAL STABILIZER CONTROL AFT FUSELAGE (STA 236.25 TO 429) - APPLICABLE TO AIRCRAFT CODED (FR)

FIGURE & INDEX NO.	PART NUMBER	1	2	3	4	5	6	7	NOMENCLATURE	UNITS PER ASSY.	USABLE ON CODE	S/C NO.
183-172	209-522374	.							PISTON, Elevator linkage spring	1	FR	
-173	AN310-4	.							NUT	2	FR	
-174	2W18-416L	.							WASHER, Flat (NA) (89372)	2	FR	
-175	AN310-4	.							NUT	2	FR	
-176	2W18-416	.							WASHER, Flat (NA) (89372)	2	FR	
-177	2W2SP16-24-125	.							WASHER, Thrust (NA) (89372)	2	FR	
-178	209-52265-3	.							SCREW, Elevator control adjusting	2	FR	
-179	AN320-8	.							NUT	2	FR	
-180	2W18-816	.							WASHER, Flat (NA) (89372)	2	FR	
-181	2W18-816M	.							WASHER, Flat (NA) (89372)	2	FR	
-182	NAS464-8-50	.							BOLT	2	FR	
-183	209-52261-23	.							BUSHING, Elevator control linkage rotation	2	FR	
-184	209-522381	.							HORN, Elevator control preload assembly of	2	FR	
	209-522381-3	.	.						HORN, Elevator control preload	2	FR	
-185	209-522364-5	.	.						BUSHING, Elevator control linkage close tolerance flange	4	FR	
-186	HSBG-4	.	.						BEARING (HLF) (97613)	1	FR	
-187	209-52264-3	.	.						SLEEVE, Elevator control	1	FR	
-188	NAS516-1	.	.						FITTING, Lubricator	3	FR	
-189	AN365-428	.							NUT	1	FR	
-190	2W18-416	.							WASHER, Flat (NA) (89372)	2	FR	
-191	AN4-12A	.							BOLT	1	FR	
-192	4B21M-S4-025	.							BUSHING, Spacer (NA) (89372)	1	FR	
-193	AN320-4	.							NUT	1	FR	
-194	2W18-416	.							WASHER, Flat (NA) (89372)	1	FR	
-195	2W18-516M	.							WASHER, Flat (NA) (89372)	1	FR	
-196	209-522365	.							BOLT, Elevator control linkage close tolerance 5/16 diameter	1	FR	
-197	209-522378-2	.							ARM, Elevator control preload assembly of RH	1	FR	
	209-522378-1	.							ARM, Elevator control preload assembly of LH	1	FR	
-198	209-522359-13	.	.						BUSHING, Elevator control linkage close tolerance rotation	1	FR	
-199	HSBG-5S	.	.						BEARING (HLF) (97613)	1	FR	
-200	MS15001-4	.	.						FITTING, Lubrication	1	FR	
-201	NAS516-1	.	.						FITTING, Lubricator	2	FR	

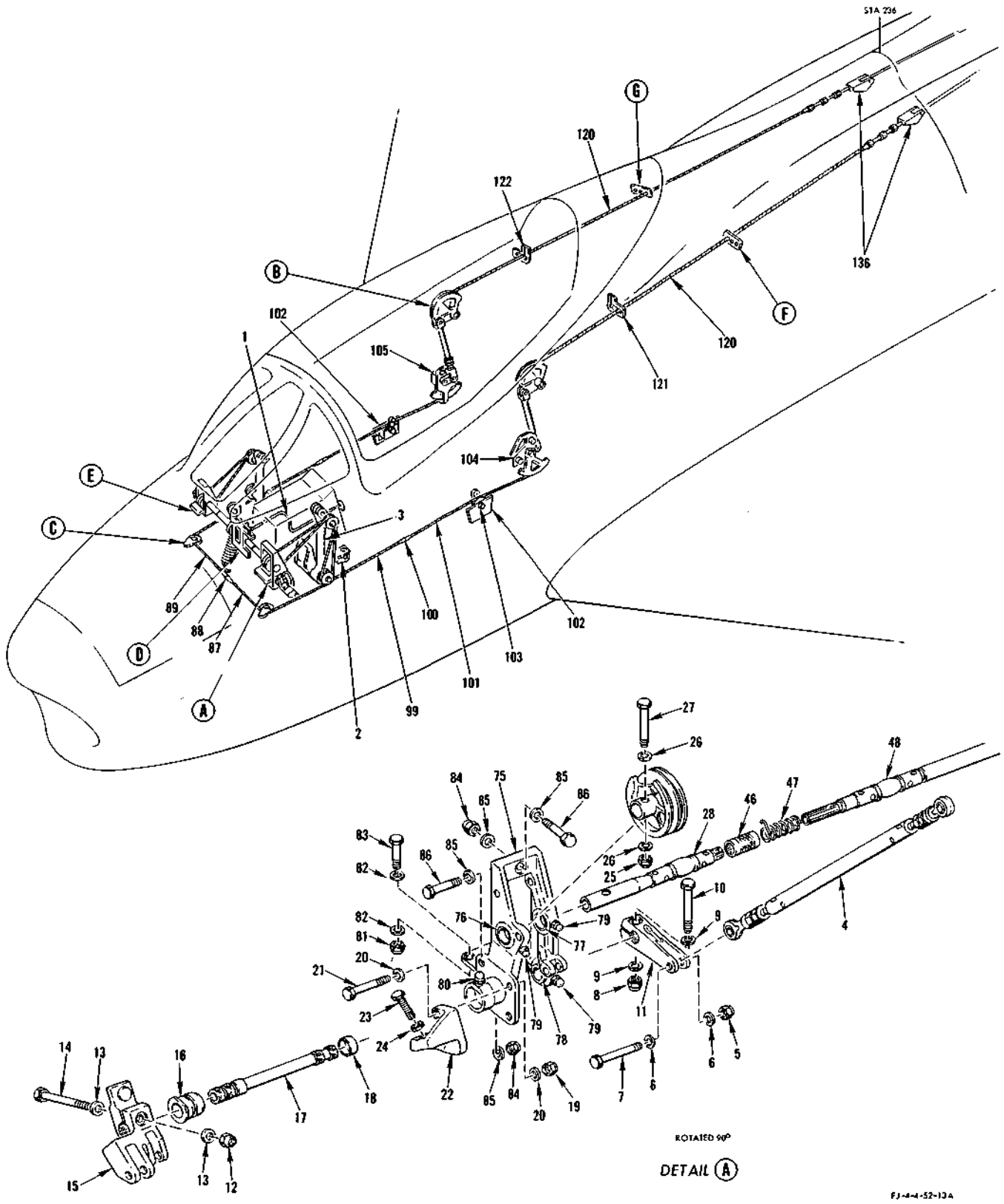

FIGURE 184 - RUDDER CONTROL FORWARD FUSELAGE (STA 0 TO 236.25) - APPLICABLE TO AIRCRAFT CODED (Y) (Sheet 1)

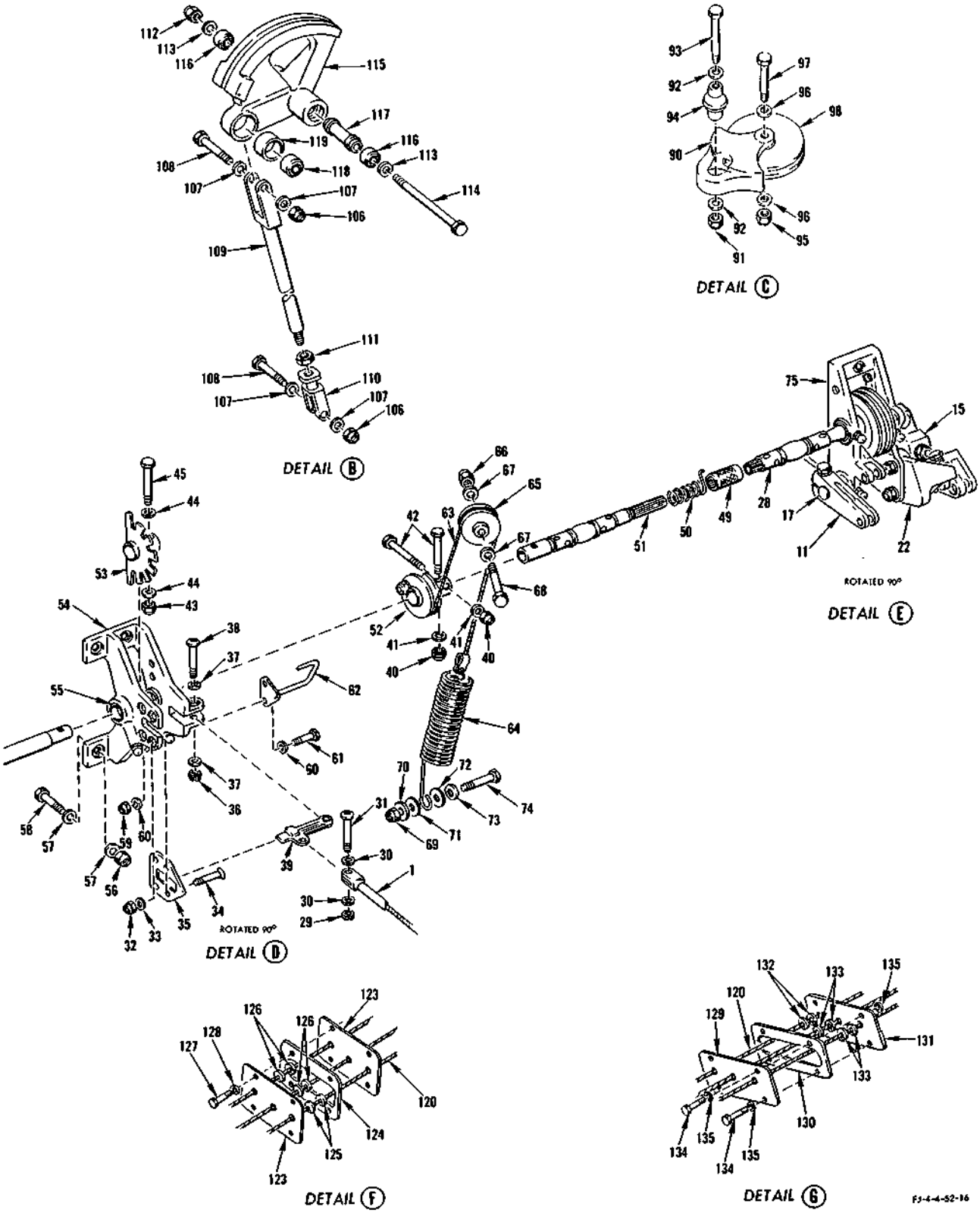

FIGURE 184 - RUDDER CONTROL FORWARD FUSELAGE (STA 0 TO 236.25) - APPLICABLE TO AIRCRAFT CODED (Y) (Sheet 2)

RUDDER CONTROL FORWARD FUSELAGE (STA 0 TO 236.25) - APPLICABLE TO AIRCRAFT CODED (Y)

FIGURE & INDEX NO.	PART NUMBER	1 2 3 4 5 6 7 NOMENCLATURE	UNITS PER ASSY.	USABLE ON CODE
184-1	C9398-206	CABLE ASSEMBLY (TEX)(78710)	1	Y
	C9397	TELESCOPIC UNIT (TEX)(78710)	1	Y
-2	181-52018-11	LOCK ASSEMBLY, Surface control rudder (see figure 187 for breakdown)	1	Y
-3	181-52401	PEDAL ASSEMBLY, Rudder control complete (see figure 186 for breakdown)	1	Y
-4	181-52436	. ROD ASSEMBLY, Pilots brake forward (see figure 186 for breakdown)	1	Y
-5	AN365-428	NUT	1	Y
-6	2W18-416	WASHER, Flat (NA) (89372)	2	Y
-7	AN174-13A	BOLT	1	Y
-8	AN365-428	NUT	1	Y
-9	2W18-416	WASHER, Flat (NA) (89372)	2	Y
-10	AN4-14A	BOLT	1	Y
-11	181-52433-3	ARM, Pilots brake forward bellcrank inboard	2	Y
-12	AN365-428	NUT	1	Y
-13	2W18-416	WASHER, Flat (NA) (89372)	2	Y
-14	AN4-17A	BOLT	1	Y
-15	209-52431-1	ARM ASSEMBLY, Pilots brake forward bellcrank outboard LH	2	Y
	209-52431-2	ARM ASSEMBLY, Pilots brake forward bellcrank outboard RH	1	Y
-16	181-52462	BUSHING, Pilots brake forward bellcrank shaft	1	Y
-17	181-52435-3	SHAFT, Pilots brake forward bellcrank (supersedes 181-52435 for future procurement)	2	Y
-18	F-5/8-MM	SEAL (SAL) (77842)	1	Y
-19	AN365-428	NUT	2	Y
-20	2W18-416M	WASHER, Flat (NA) (89372)	4	Y
-21	AN4-10A	BOLT	2	Y
-22	181-52424-1	STOP, Pilots brake pedal LH	1	Y
	181-52424-2	STOP, Pilots brake pedal RH	1	Y
	RL28SB8	. RING (ROSN) (83324)	1	Y
	RD206SH65L	. INSERT (ROSN)(83324)	1	Y
-23	NAS428H4-11	BOLT	1	Y
-24	1N7-4A	NUT, Check (NA) (89372)	1	Y
-25	AN365-428	NUT	1	Y
-26	2W18-416	WASHER, Flat (NA) (89372)	2	Y
-27	AN174-15A	BOLT	1	Y
-28	209-52453	SHAFT ASSEMBLY, Rudder pedal adjustment cable pulley	2	Y
	209-52453-3	. TUBE, Rudder pedal adjustment cable pulley shaft assembly	1	Y
	159-52117-29	. PLUG, Rod end and tube rivet	1	Y
	AN271B12	. JOINT, Universal	1	Y
	181-52456-3	. TUBE END, Rudder pedal adjustment cable pulley	1	Y
-29	AN320-3	NUT	1	Y
-30	2W18-10	WASHER, Flat (NA) (89372)	2	Y
-31	AN23-14	BOLT	1	Y
	209-52403	TUBE ASSEMBLY, Pilots brake pedal adjustment center complete	1	Y
-32	AN365-1032	. NUT	4	Y
-33	2W18-10	. WASHER, Flat (NA) (89372)	4	Y
-34	AN509-10R12	. BOLT	4	Y
-35	181-52421	. PLATE, Rudder pedal adjustment pawl guide	1	Y
-36	AN310-3	. NUT	1	Y
-37	2W18-10	. WASHER, Flat (NA) (89372)	2	Y
-38	AN23-14	. BOLT	1	Y
-39	181-52416-3	. LEVER, Pilots brake pedal adjustment ratchet release	1	Y
-40	AN365-1032	. NUT	1	Y
-41	2W18-416M	. WASHER, Flat (NA) (89372)	1	Y
-42	AN173-12A	. BOLT	1	Y
-43	AN365-428	. NUT	1	Y
-44	2W18-416M	. WASHER, Flat (NA) (89372)	2	Y
-45	AN174-13A	. BOLT	1	Y
	209-52406	. TUBE ASSEMBLY, Pilots brake pedal adjustment LH torque	1	Y
-46	181-52458	. . COLLAR, Pilots brake pedal adjustment torque tube connecting	1	Y
-47	181-52457	. . SPRING, Rudder pedal adjustment torque tube disconnect	1	Y
	181-52455-7	. . TUBE END, Pilots brake pedal adjustment torque	1	Y
-48	AN271B12	. . JOINT	1	Y
	159-52117-29	. . PLUG, Rod end and tube rivet	2	Y
	209-52406-3	. . TUBE, Pilots brake pedal adjustment LH torque tube assembly	1	Y
	209-52407	. TUBE ASSEMBLY, Pilots brake pedal adjustment RH torque	1	Y
-49	181-52458	. . COLLAR, Pilots brake pedal adjustment torque tube connecting	1	Y
-50	181-52457	. . SPRING, Rudder pedal adjustment torque tube disconnect	1	Y
-51	181-52455-9	. . TUBE END, Pilots brake pedal adjustment torque	1	Y
	AN271B12	. . JOINT	1	Y
	159-52117-29	. . PLUG, Rod end and tube rivet	1	Y
-52	181-52477-3	. SECTOR, Pilots rudder pedal adjustment	1	Y
-53	181-52410-101	. RACHET ASSEMBLY, Pilots brake pedal adjustment	1	Y
-54	181-52408	. SUPPORT ASSEMBLY, Pilots brake pedal adjustment torque tube center	1	Y
-55	4B19B12-006	. . BUSHING, Press fit plain (NA) (89372)	2	Y
	4B20B12-006	. . BUSHING, Press fit flanged (NA) (89372)	2	Y
	AN944-201	. . FITTING, Lubricator	2	Y
-56	AN365-428	NUT	4	Y
-57	2W18-416	WASHER, Flat (NA) (89372)	8	Y
-58	AN4-6A	BOLT	4	Y
-59	AN365-1032	NUT	2	Y
-60	2W18-10M	WASHER, Flat (NA) (89372)	4	Y
-61	AN3-5A	BOLT	2	Y
-62	181-52478	ROD ASSEMBLY, Pilots rudder pedal adjustment sector guard pin	1	Y
-63	181-52476	CABLE ASSEMBLY, Pilots ruder pedal adjustment	1	Y
	RA2487-2	. BALL, Terminal (ACA) (01976)	1	Y

RUDDER CONTROL FORWARD FUSELAGE (STA 0 TO 236.25) - APPLICABLE TO AIRCRAFT CODED (Y)

FIGURE & INDEX NO.	PART NUMBER	1 2 3 4 5 6 7 NOMENCLATURE	UNITS PER ASSY.	USABLE ON CODE
184	181-52475	. EYE, Pilots rudder pedal adjustment cable	1	Y
	181-52474	. BOLT, Pilots rudder pedal adjustment sector	1	Y
	AN664C2	. TERMINAL	1	Y
-64	181-52447	SPRING, Tension	1	Y
-65	AN219-2	PULLEY	1	Y
-66	AN365-428	NUT	1	Y
-67	2W18-416	WASHER, Flat (NA) (89372)	2	Y
-68	AN4-11A	BOLT	1	Y
-69	AN365-428	NUT	1	Y
-70	2W1C17-28-64	WASHER, Plain (NA) (89372)	1	Y
-71	2W1C17-23-187	WASHER, Plain (NA) (89372)	1	Y
-72	2W1C17-28-312	WASHER, Plain (NA) (89372)	1	Y
-73	2W1C17-24-64	WASHER, Plain (NA) (89372)	1	Y
-74	AN4-11A	BOLT	1	Y
-75	181-52409-1	SUPPORT ASSEMBLY, Pilots brake pedal adjustment torque tube and bellcrank LH	1	Y
	181-52409-2	SUPPORT ASSEMBLY, Pilots brake pedal adjustment torque tube and bellcrank RH	1	Y
-76	4B19B12-006	. BUSHING, Press fit plain (NA) (89372)	2	Y
-77	4B20B12-006	. BUSHING, Press fit flanged (NA) (89372)	2	Y
-78	4B19B10-006	. BUSHING, Press fit plain (NA) (89372)	1	Y
	4B20B10-006	. BUSHING, Press fit flanged (NA) (89372)	1	Y
-79	MS15001-1	. FITTING, Lubrication	3	Y
-80	MS15001-3	. FITTING, Lubrication	1	Y
-81	AN365-428	NUT	2	Y
-82	2W18-416M	WASHER, Flat (NA) (89372)	4	Y
-83	AN4-5A	BOLT	2	Y
-84	AN365-428	NUT	3	Y
-85	2W18-416M	WASHER, Flat (NA) (89372)	6	Y
-86	AN4-6A	BOLT	3	Y
	AN364-428	NUT	1	Y
	2W18-416	WASHER, Flat (NA) (89372)	1	Y
-87	181-52426	CABLE ASSEMBLY, Rudder control LH bus	1	Y
	AN664C5	. TERMINAL	1	Y
	AN669S5RH	. TERMINAL	1	Y
	181-52466	. BOLT, Rudder control cable to sector attaching eye	1	Y
-88	AN155-325	BARREL	1	Y
	AN364-428	NUT	1	Y
	2W18-416	WASHER, Flat (NA) (89372)	1	Y
-89	181-52442	CABLE ASSEMBLY, Rudder control RH bus	1	Y
	AN664C5	. TERMINAL	1	Y
	AN669S5LH	. TERMINAL	1	Y
	181-52466	. BOLT, Rudder control cable to sector attaching eye	1	Y
-90	157-52481	BRACKET, Rudder control bus swivel base	2	Y
-91	AN365-428	NUT	1	Y
-92	2W18-416	WASHER, Flat (NA) (89372)	2	Y
-93	AN4-16A	BOLT	1	Y
-94	181-52465	BUSHING, Rudder balance cable pulley bracket support	1	Y
-95	AN365-428	NUT	1	Y
-96	2W18-416	WASHER, Flat (NA) (89372)	2	Y
-97	AN4-14A	BOLT	1	Y
-98	AN210-4B	PULLEY	1	Y
-99	181-52467	CABLE ASSEMBLY, Rudder control forward fuselage forward	2	Y
	AN664C5	. TERMINAL	1	Y
	AN669S5RH	. TERMINAL	1	Y
	181-52466	. BOLT, Rudder control cable to sector attaching eye	1	Y
-100	AN155-32S	BARREL	2	Y
-101	181-52427	CABLE ASSEMBLY, Rudder control forward fuselage intermediate	2	Y
	AN664C5	. TERMINAL	1	Y
	AN669S5LH	. TERMINAL	1	Y
-102	181-52420	BRACKET ASSEMBLY, Rudder control fuselage station 110.906 pulley	2	Y
	NAS427T10	PIN	1	Y
	AN220-2	PULLEY	1	Y
	ATTACHING PARTS			
-103	AN5-15A	BOLT	1	Y
	2W18-516	WASHER, Flat (NA) (89372)	2	Y
	AN364-524	NUT	1	Y
	---*---			
-104		FUSELAGE STATION 124 LH RUDDER STABILIZER AND AILERON CONTROL ASSEMBLY (see figure 191 for breakdown)		
-105		FUSELAGE STATION 124 RH RUDDER AND STABILIZER BELLCRANK AND SECTOR ASSEMBLY (see figure 192 for breakdown)		
-106	AN365-428	NUT	2	Y
-107	2W18-416	WASHER, Flat (NA) (89372)	4	Y
-108	AN174-12A	BOLT	2	Y
	181-52449	ROD ASSEMBLY, Rudder control forward fuselage push pull	1	Y
-109	181-52449-3	. ROD SUBASSEMBLY, Rudder control forward fuselage push pull	1	Y
-110	165-52016	. CLEVIS, Surface control operating female	1	Y
-111	AN316-5R	. NUT	1	Y
-112	AN365-428	NUT	1	Y
-113	2W18-416	WASHER, Flat (NA) (89372)	2	Y
-114	AN174-25A	BOLT	1	Y
-115	181-52446-2	SECTOR ASSEMBLY, Rudder control fuselage station 127.406 actuating RH	1	Y
	181-52446-1	SECTOR ASSEMBLY, Rudder control fuselage station 127.406 actuating LH	1	Y
-116	AN201KP4A	. BEARING	2	Y

RUDDER CONTROL FORWARD FUSELAGE (STA 0 TO 236.25) - APPLICABLE TO AIRCRAFT CODED (Y)

FIGURE & INDEX NO.	PART NUMBER	1 2 3 4 5 6 7 NOMENCLATURE	UNITS PER ASSY.	USABLE ON CODE
184-117	4S7-4-1.485	. SPACER, Flanged dual bearing (NA) (89372)	1	Y
-118	AN200KS4	. BEARING	1	Y
-119	4B22-4B	. BUSHING, Insert (NA) (89372)	1	Y
-120	209-52428	CABLE ASSEMBLY, Rudder control forward fuselage aft	2	Y
	AN664C5	. TERMINAL	1	Y
	AN669L5LH	. TERMINAL	1	Y
-121	209-52047	FAIRLEAD, Surface control cable support fuselage station 156 LH	1	AG
	209-52047-3	FAIRLEAD, Surface control cable support fuselage station 156 LH	1	AH
-122	209-52048	FAIRLEAD, Surface control cable support fuselage station 156 RH	1	AG
	209-52048-3	FAIRLEAD, Surface control cable support fuselage station 156 RH	1	AH
	ATTACHING	PARTS		
	AN3-16A	BOLT	2	Y
	2W18-10M	WASHER, Flat (NA) (89372)	4	Y
	NAS42DD8-56	SPACER	2	Y
	AN365-1032	NUT	2	Y
	---*---			
-123	181-520207	SEAL, Control cable fuselage station 180.906 LH	2	Y
-124	181-520206	SPACER, Control cable seal fuselage station 180.906 LH	1	Y
-125	181-520203-5	FAIRLEAD, Control cable seal (rudder cable)	2	Y
-126	181-520203-3	FAIRLEAD, Control cable seal (stabilizer cable)	4	Y
-127	AN3-6A	BOLT	4	Y
-128	2W18-10	WASHER, Flat (NA) (89372)	8	Y
-129	194-52079-5	SEAL, Control cable fuselage station 180.906 RH	1	Y
-130	194-52078	SPACER, Control cable seal fuselage station 180.906 RH	1	Y
-131	194-52079-3	SEAL, Control cable fuselage station 180.906 RH	1	Y
-132	181-520203-5	FAIRLEAD, Control cable seal (rudder cable)	2	Y
-133	181-520203-3	FAIRLEAD, Control cable seal (stabilizer cable)	4	Y
-134	AN3-7A	BOLT	4	Y
-135	2W18-10	WASHER, Flat (NA) (89372) (1 between 194-52079-3 and bulkhead)	5	Y
-136	1209-001	QUICK DISCONNECT (Bohaman Mfg Co)	2	Y

RUDDER CONTROL AFT FUSELAGE (STA 236.25 TO 429) APPLICABLE TO AIRCRAFT CODED (ET)

FIGURE & INDEX NO.	PART NUMBER	1 2 3 4 5 6 7 NOMENCLATURE	UNITS PER ASSY.	USABLE ON CODE
188-1	1209-001	QUICK DISCONNECT (Bohanan Mfg Co) (98940)	1	
-2	AN365-524	NUT	1	
-3	2W18-516	WASHER, Flat (NA) (89372)	2	
-4	AN5-12A	BOLT	1	
-5	AN220-1	PULLEY (station 246 inboard)	1	
-6	209-52477	CABLE ASSEMBLY, Rudder control aft fuselage LH	1	AS
	AN664C5	. TERMINAL	2	AS
-7	209-52478	CABLE ASSEMBLY, Rudder control aft fuselage RH	1	AS
	AN664C5	. TERMINAL	2	AS
-8	209-524106	CABLE ASSEMBLY, Rudder control aft fuselage forward	2	FK
	AN664C5	. TERMINAL	2	FK
-9	AN174-42A	BOLT	1	FR
-10	2W18-416M	WASHER, Flat (NA) (89372)	1	FK
-11	AN174-7A	BOLT	4	FK
-12	2W18-416M	WASHER, Flat (NA) (89372)	4	FK
-13	209-52418	SUPPORT, Rudder yaw damper sector upper	1	FK
-14	209-524103	CABLE ASSEMBLY, Rudder control aft fuselage intermediate LH	1	FK
	AN664C5	. TERMINAL	1	FK
	AN669S5LH	. TERMINAL	1	FK
-15	209-524102	CABLE ASSEMBLY, Rudder control aft fuselage intermediate RH	1	FK
	AN664C5	. TERMINAL	1	FK
	AN669S5RH	. TERMINAL	1	FK
	209-524110	SECTOR ASSEMBLY, Rudder yaw damper (supersedes 209-52421 for future procurement)	1	FK
-16	NAS51-125	. RING	1	FK
-17	209-524109	. SECTOR ASSEMBLY, Rudder yaw damper cable adjusting (supersedes 209-52419 for future procurement)	1	FK
	4B20B20-011	. . BUSHING, Press fit flanged (NA) (89372)	1	FK
	RL28SB-8	. . RING (ROSN) (83324)	1	FK
	RD206SB-6.5	. . INSERT (ROSN) (83324)	1	FK
-18	209-524108	. SECTOR ASSEMBLY, Rudder yaw damper (supersedes 209-52416 for future procurement)	1	FK
-19	AN200KP4	. . BEARING	1	FK
-20	4S7-5-2.220	. . SPACER, Flanged dual bearing (NA) (89372)	1	FK
-21	AN174-7A	BOLT	4	FK
-22	2W18-416	WASHER, Flat (NA) (89372)	4	FK
-23	209-52417	SUPPORT ASSEMBLY, Rudder yaw damper lower	1	FK
-24	209-524107	CABLE ASSEMBLY, Rudder yaw damper servo connecting (supersedes 209-524101 for future procurement)	1	FK
	AN663C3	. TERMINAL	1	FK
	AN664C3	. TERMINAL	2	FK
-25	AN365-428	NUT	1	FK
-26	2W18-416M	WASHER, Flat (NA) (89372)	2	FK
-27	AN4-12A	BOLT	1	FK
-28	AN219-2	PULLEY	1	FK
-29	AN155-32S	BARREL	2	FK
-30	209-524104	CABLE ASSEMBLY, Rudder control aft LH	1	FK
	AN669S5RH	. TERMINAL	1	FK
	AN664C5	. TERMINAL	1	FK
-31	209-524105	CABLE ASSEMBLY, Rudder control aft RH	1	FK
	AN669S5LH	. TERMINAL	1	FK
	AN664C5	. TERMINAL	1	FK
-32	AN173-7A	BOLT	4	FK
-33	2W18-10	WASHER, Flat (NA) (89372)	4	FK
	209-54740	MOTOR ASSY, Yaw damper servo (supersedes 118AB (LA) (35351) for future procurement)	1	FK
-34	AN500A4-3	. SCREW	3	FK
-35	2W18-4	. WASHER, Flat (NA) (89372)	3	FK
-36	209-54741	. COVER, Yaw damper servo motor	1	FK
-37	118AB	. SERVO MOTOR (LA) (35351) (for breakdown see Technical Manual AN 05-45EA-7)	1	FK
-38	AN173-6A	BOLT	4	FK
-39	2W18-10	WASHER, Flat (NA) (89372)	4	FK
-40	913B-4	DRUM ASSEMBLY (LA) (35351) (for breakdown see Technical Manual AN 05-45EA-7)	1	FK
-41	209-52420	SUPPORT ASSEMBLY, Yaw damper servo capstan	1	FK
-42	AN5-15A	BOLT	1	ET
-43	AN220-3A	PULLEY (station 360 rudder LH)	1	ET
-44	AN5-15A	BOLT	1	ET
-45	AN220-2A	PULLEY (station 360 rudder RH)	1	ET
-46	AN363-426	NUT	6	ET
-47	2W18-416	WASHER, Flat (NA) (89372)	12	ET
-48	AN4-7A	BOLT	6	ET
-49	209-52077	BRACKET, Horizontal stabilizer and rudder control fus station 357 to station 362 pulley	1	U
	209-52051	BRACKET, Horizontal stabilizer and rudder control fuselage station 357 to station 362 pulley	1	GA
-50	AN365-524	NUT	1	ET
-51	2W18-516M	WASHER, Flat (NA) (89372)	3	ET
-52	2W18-516	WASHER, Flat (NA) (89372)	1	ET
-53	AN175-34A	BOLT	1	ET
-54	AN4-10A	BOLT	6	ET
-55	2W18-416	WASHER, Flat (NA) (89372)	6	ET
-56	209-52483	SUPPORT ASSEMBLY, Rudder control sector	1	ET
-57	AN365-428	NUT	1	ET
-58	2W18-416	WASHER, Flat (NA) (89372)	1	ET
-59	NAS334PA16	BOLT	1	ET
-60	209-52482	SECTOR, Rudder control surface operating (supersedes 209-52466 for future procurement)	1	ET
-61	AN365-524	NUT	1	ET

RUDDER CONTROL AFT FUSELAGE (STA 236.25 TO 429) APPLICABLE TO AIRCRAFT CODED (ET)

FIGURE & INDEX NO.	PART NUMBER	1 2 3 4 5 6 7 NOMENCLATURE	UNITS PER ASSY.	USABLE ON CODE
188-62	2W18-516M	WASHER, Flat (NA) (89372)	2	ET
-63	AN175-12A	BOLT	1	ET
	209-52475	ROD ASSEMBLY, Rudder control surface operating	1	ET
-64	209-52486	. CLEVIS, Rudder control operating female	1	ET
-65	AN316-5R	. NUT	1	ET
	209-52475-5	. ROD SUBASSEMBLY, Rudder control surface operating	1	ET
-66	RE4F5	. . ROD END, Female thread shank (FAF) (21335)	1	ET
-67	AN316-5R	. . NUT	1	ET
-68	209-52475-3	. . TUBE, Rudder control surface operating rod subassembly	1	ET
	209-587181	DAMPER ASSEMBLY, Hydraulic flight control rudder flutter (interchangeable with 306167 (HOH) (24500))	1	LB
	ATTACHING PARTS			
-69	AN365-428	NUT	1	LB
-70	2W18-416M	WASHER, Flat (NA) (89372)	2	LB
-71	AN174-7A	BOLT	2	LB
-72	209-58731	CLAMP, Rudder damper to torque shaft	1	LB
-73	AN365-428	NUT	1	LB
-74	2W18-416	WASHER, Flat (NA) (89372)	1	LB
-75	AN509-416R34	SCREW	1	LB
-76	AN365-428	NUT	1	LB
-77	2W18-416M	WASHER, Flat (NA) (89372)	2	LB
-78	AN174-7A	BOLT	1	LB
	---+---			
-79	AN365-1032	. NUT	1	LB
-80	2W18-10	. WASHER, Flat (NA) (89372)	1	LB
-81	AN509-10R40	. SCREW (forward)	1	LB
-82	4B21M-S3-007	. BUSHING, Spacer (NA) (89372)	1	LB
-83	AN365-1032	. NUT	1	LB
-84	2W18-10	. WASHER, Flat (NA) (89372)	1	LB
-85	AN509-10R38	. SCREW (aft)	1	LB
-86	4B21M-S3-007	. BUSHING, Spacer (NA) (89372)	1	LB
-87	209-587182	. CLAMP ASSEMBLY, Hydraulic flight control rudder flutter	1	LB
	4B19B4-008	. . BUSHING, Press fit plain (NA) (89372)	1	LB
-88	306194	. DAMPER (HOH) (24500)	1	LB
-89		RUDDER TRIM ACTUATOR (See figure 190 for breakdown)		

RUDDER CONTROL AFT FUSELAGE STATION 236.25 TO STATION 429 - APPLICABLE TO AIRCRAFT CODED (FR)

FIGURE & INDEX NO.	PART NUMBER	1 2 3 4 5 6 7 NOMENCLATURE	UNITS PER ASSY.	USABLE ON CODE	S/C NO.
189-1	1209-001	QUICK DISCONNECT (Bohanan Mfg. Co) (98940)	1	FR	
-2	AN220-1	PULLEY (station 246 inboard)	1	FR	
-3	AN365-524	NUT	4	FR	
-4	2W18-516	WASHER, Flat (NA) (89372)	8	FR	
-5	AN5-12A	BOLT	2	FR	
-6	AN220-3A	PULLEY (station 360 rudder LH)	1	FR	
-7	AN220-2A	PULLEY (station 360 rudder RH)	1	FR	
-8	AN5-15A	BOLT	2	FR	
-9	209-52051	BRACKET, Horizontal stabilizer and rudder control fuselage station 360 pulley	1	FR	
-10	AN363-428	NUT	6	FR	
-11	2W18-416	WASHER, Flat (NA) (89372)	12	FR	
-12	AN4-7A	BOLT	6	FR	
-13	209-524163	CABLE ASSEMBLY, Rudder control aft fuselage LH	1	FR	
	AN664C5	. TERMINAL	2	FR	
-14	209-524162	CABLE ASSEMBLY, Rudder control aft fuselage RH	1	FR	
	AN664C5	. TERMINAL	2	FR	
-15	AN365-524	NUT	1	FR	
-16	2W18-516M	WASHER, Flat (NA) (89372)	3	FR	
-17	2W18-516	WASHER, Flat (NA) (89372)	1	FR	
-18	AN175-34A	BOLT	1	FR	
-19	209-524172	SUPPORT ASSEMBLY, Rudder control sector	1	FR	
	ATTACHING PARTS				
-20	AN4-10A	BOLT	6	FR	
-21	2W18-416	WASHER, Flat (NA) (89372)	6	FR	
	---*---				
-22	AN201KP5A	. BEARING	2	FR	
-23	209-524184	SPRING TENSION	1	FR	
-24	AN365-632	NUT	1	FR	
-25	AN515-6R8	SCREW	1	FR	
-26	209-524183	BRACKET, Rudder force transducer spring attaching	1	FR	
-27	MS21919WDG2	CLAMP	1	FR	
-28	AN365-524	NUT	1	FR	
-29	2W18-516M	WASHER, Flat (NA) (89372)	2	FR	
-30	AN175-12A	BOLT	1	FR	
-31	AN365-428	NUT	1	FR	
-32	2W18-416	WASHER, Flat (NA) (89372)	1	FR	
-33	NAS334PA16	BOLT	1	FR	
-34	209-52475	ROD ASSEMBLY, Rudder control surface operating	1	FR	
	209-52475-5	. ROD SUBASSEMBLY, Rudder control surface operating	1	FR	
-35	209-52475-3	. . TUBE, Rudder control surface operating rod subassembly	1	FR	
-36	1R12-10-65-524	. . RIVETING ROD END, Threaded (NA) (89372)	2	FR	
-37	RE4F5	. . ROD END, Female threaded shank (FAF) (21335)	1	FR	
-38	AN316-5R	. . NUT	1	FR	
-39	209-52486	. CLEVIS, Rudder control operating female	1	FR	
-40	AN316-5R	. NUT	1	FR	
-41	209-52450	FITTING, Rudder bungee forward attaching (see Structures)	1	FR	
-42	209-524186	BUNGEE ASSEMBLY, Rudder control system artificial feel (superseded by 209-524186-11 for future procurement)	1	FR	
-43	209-524186-11	BUNGEE ASSEMBLY, Rudder control system artificial feel (supersedes 209-524186 for future procurement)	1	FR	
	ATTACHING PARTS				
-44	AN365-428	NUT	1	FR	
-45	2W18-416M	WASHER, Flat (NA) (89372)	2	FR	
-46	AN4-13A	BOLT (forward)	1	FR	
-47	NAS334CPA13-5	BOLT (aft)	1	FR	
	---*---				
	209-524193	. ROD END ASSEMBLY, Rudder control system artificial feel bungee	1	FR	
-48	209-524193-3	. . ROD END, Rudder control system artificial feel bungee rod end assembly	1	FR	
-49	KS4A	. . BEARING (FAF) (21335)	1	FR	
-50	1N7-5A	. NUT, Check (NA) (89372)	2	FR	
-51	2W15-5	. WASHER, Lock (NA) (89372)	2	FR	
-52	209-524194	. NUT, Rudder control artificial feel bungee	1	FR	
	209-524192	. CAP ASSEMBLY, Rudder control artificial feel bungee	1	FR	
-53	209-524192-3	. . CAP, Rudder control artificial feel cap assembly	1	FR	
-54	AN200KS4	. . BEARING	1	FR	
-55	209-52458	. NUT, Rudder control artificial feel bungee cap	1	FR	
-56	209-524191	. ROD, Rudder control artificial feel (used on 209-524186 only)	1	FR	
-57	209-524191-3	. ROD, Rudder control artificial feel (used on 209-524186-11 only)	1	FR	
-58	209-524190	. PISTON, Rudder control artificial feel bungee (used on 209-524186 only)	1	FR	
-59	209-524190	. PISTON, Rudder control artificial feel bungee (used on 209-524186-11 only)	1	FR	
-60	209-524189	. SPRING, Close tolerance compression	1	FR	
-61	209-524188	. PISTON, Rudder control system artificial feel bungee	1	FR	
-62	209-524187	. HOUSING, Rudder control artificial feel bungee	1	FR	
-63	209-52452	. NAME PLATE, Artificial feel bungee control	1	FR	
-64	209-524171	TRANSDUCER ASSEMBLY, Rudder pedal force	1	FR	
-65	AN364-632	. NUT	1	FR	
-66	2W18-6	. WASHER, Flat (NA) (89372)	2	FR	
-67	7S14-632-34A	. SCREW, Round head corrosion-resistant (NA) (89372)	1	FR	
-68	NAS43DD1-109	. SPACER	1	FR	
-69	AN364-632	. NUT	1	FR	

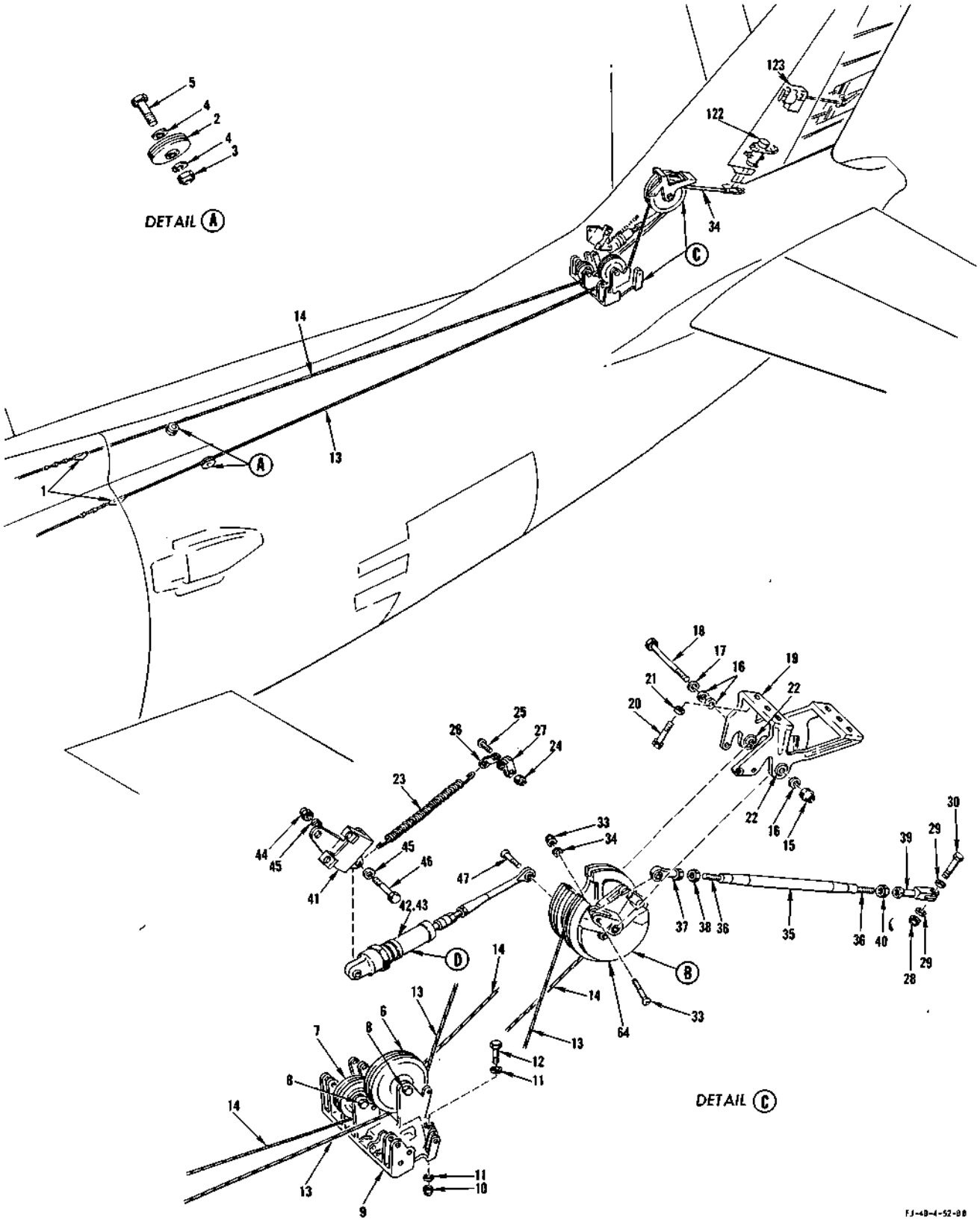

FIGURE 189 - RUDDER CONTROL AFT FUSELAGE STATION 236.25 TO STATION 429 - APPLICABLE TO AIRCRAFT CODED (FR) (Sheet 1)

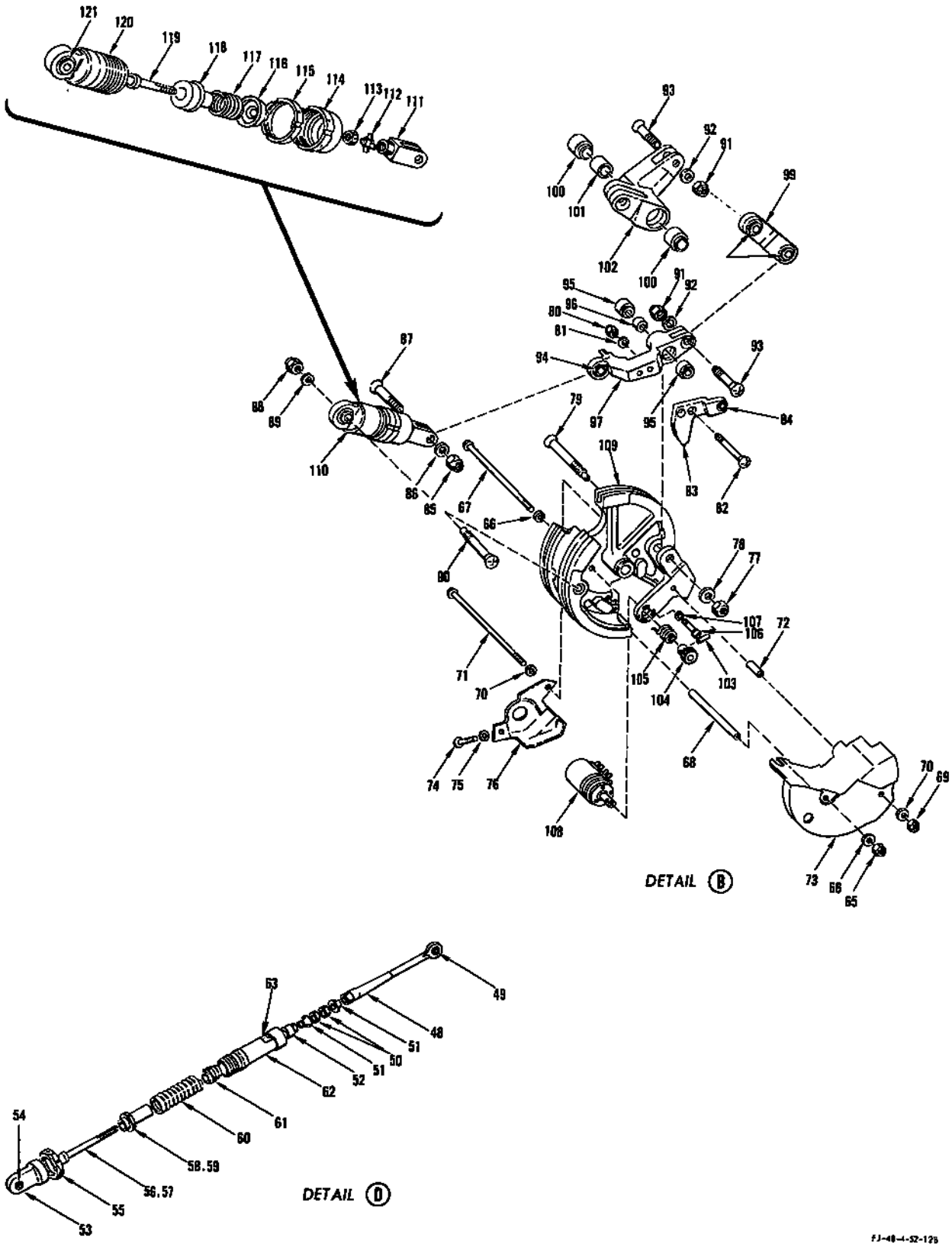

FIGURE 189 - RUDDER CONTROL AFT FUSELAGE STATION 236.25 TO STATION 429 - APPLICABLE TO AIRCRAFT CODED (FR) (Sheet 2)

RUDDER CONTROL AFT FUSELAGE STATION 236.25 TO STATION 429 - APPLICABLE TO AIRCRAFT CODED (FR)

FIGURE & INDEX NO.	PART NUMBER	1	2	3	4	5	6	7	NOMENCLATURE	UNITS PER ASSY.	USABLE ON CODE	S/C NO.
189 -70	2W18-6	.							WASHER, Flat (NA) (89372)	2	FR	
-71	7S14-632-39A	.							SCREW, Round head corrosion-resistant (NA) (89372)	1	FR	
-72	NAS43DD1-29	.							SPACER	1	FR	
-73	209-524179	.							COVER, Rudder force transducer LH	1	FR	
-74	AN515-6R10	.							SCREW	1	FR	
-75	2W18-6	.							WASHER, Flat (NA) (89372)	1	FR	
-76	209-524180	.							COVER, Rudder force transducer RH	1	FR	
-77	AN364-428	.							NUT	1	FR	
-78	2W18-416M	.							WASHER, Flat (NA) (89372)	1	FR	
-79	209-524132	.							BOLT, Rudder force transducer bellcrank bungee	1	FR	
-80	AN365-632	.							NUT	2	FR	
-81	2W18-6	.							WASHER, Flat (NA) (89372)	2	FR	
-82	AN507-632R16	.							SCREW	2	FR	
-83	209-524178	.							GEAR ASSEMBLY, Rudder force transducer sector	1	FR	
-84	33KDD3	.	.						BEARING (FAF) (21335)	1	FR	
-85	AN365-428	.							NUT	1	FR	
-86	2W18-416M	.							WASHER, Flat (NA) (89372)	1	FR	
-87	NAS334CPA10	.							BOLT	1	FR	
-88	AN365-428	.							NUT	1	FR	
-89	2W1AL16-13-32	.							WASHER, Plain (NA) (89372)	1	FR	
-90	7S28-4-14	.							SCREW, 100° close tolerance 105,000 psi minimum shear strength (NA) (89372)	1	FR	
-91	AN364-428	.							NUT	2	FR	
-92	2W18-416M	.							WASHER, Flat (NA) (89372)	2	FR	
-93	209-524131	.							SCREW, Rudder force transducer	2	FR	
	209-524175-11	.							BELLCRANK ASSEMBLY, Rudder force transducer bungee	1	FR	
-94	KS4A	.	.						BEARING (FAF) (21335)	1	FR	
-95	AN201K4A	.	.						BEARING	2	FR	
-96	4S6-4-0.405	.	.						SPACER, Plain dual bearing (NA) (89372)	1	FR	
-97	209-524175-3	.	.						FITTING, Rudder force transducer bungee bellcrank assembly	1	FR	
	209-524176	.							LINK ASSEMBLY, Rudder force transducer bellcrank connecting	1	FR	
-98	KS4A	.	.						BEARING (FAF) (21335)	2	FR	
-99	209-524176-3	.	.						FITTING, Rudder force transducer bellcrank connecting link assembly	1	FR	
	209-524174-11	.							BELLCRANK ASSEMBLY, Rudder control surface and force transducer operating	1	FR	
-100	AN201KP5A	.	.						BEARING	2	FR	
-101	4S6-5-0.556	.	.						SPACER, Plain dual bearing (NA) (89372)	1	FR	
-102	209-524174-3	.	.						FITTING, Rudder control surface and force transducer operating bellcrank assembly	1	FR	
-103	59-012-062-0375	.							ROLLPIN (EN) (72962)	1	FR	
-104	209-524130	.							GEAR, Rudder force transducer potentiometer spur	1	FR	
-105	209-524133	.							SPRING, Rudder force transducer torsion	1	FR	
-106	AN500A4-5	.							SCREW	3	FR	
-107	2W18-4L	.							WASHER, Flat (NA) (89372)	3	FR	
-108	85193A	.							POTENTIOMETER, Minigang (GIA) (72737)	1	FR	
-109	209-534173	.							SECTOR ASSEMBLY, Rudder force transducer and surface operating	1	FR	
-110	209-524114	.							BUNGEE ASSEMBLY, Rudder force transducer	1	FR	
-111	209-524177	.	.						ROD END, Rudder force transducer bungee	1	FR	
-112	2W11A4	.	.						WASHER, Tab lock (NA) (89372)	1	FR	
-113	1N7-4A	.	.						NUT, Check (NA) (89372)	1	FR	
-114	209-524116	.	.						CAP, Rudder force transducer bungee	1	FR	
-115	209-524117	.	.						NUT, Rudder force transducer bungee check	1	FR	
-116	209-524157	.	.						RETAINER, Rudder force transducer bungee spring push	1	FR	
-117	209-524121	.	.						SPRING, Compression	1	FR	
-118	209-524119	.	.						RETAINER, Rudder force transducer bungee spring pull	1	FR	
-119	209-524118	.	.						ROD, Rudder force transducer bungee	1	FR	
-120	209-524115	.	.						HOUSING ASSEMBLY, Rudder force transducer bungee	1	FR	
-121	KS4A	.	.	.					BEARING (FAF) (21335)	1	FR	
-122	476-2								SERVO UNIT, Rotary rudder (Gray and Huleguard, Inc.) (see Hydraulics)	1	FR	
-123									RUDDER TRIM ACTUATOR (see figure 190 for breakdown)			

RH RUDDER AND STABILIZER BELLCRANK AND SECTOR ASSEMBLY

FIGURE & INDEX NO.	PART NUMBER	1 2 3 4 5 6 7 NOMENCLATURE	UNITS PER ASSY.	USABLE ON CODE	S/C NO.
192-1	AN8H6A	BOLT	1		
-2	2W1AL33-30-91	WASHER, Plain (NA) (89372)	1		
-3	AN310-4	NUT	1		
-4	2W18-416	WASHER, Flat (NA) (89372)	2		
-5	AN4-15	BOLT	1		
-6	181-52444-16	SECTOR ASSEMBLY, Rudder actuating fuselage station 124 cable	1		
-7	1P7	. PLUG, Control stop (NA) (89372)	1		
-8	AN201KP12A	BEARING	2		
-9	2W1-48-36-64	WASHER, Plain (NA) (89372)	2		
-10	165-52006	SPRING, Compression	2		
-11	AN364-524	NUT	1		
-12	2W1AL21-30-91	WASHER, Plain (NA) (89372)	1		
-13	AN365-428	NUT	1		
-14	2W18-416	WASHER, Flat (NA) (89372)	2		
-15	AN4-15A	BOLT	1		
-16	181-52445-11	ARM ASSEMBLY, Rudder control fuselage station 125 bellcrank (supersedes 181-52445-5 for future procurement)	1		
	4B22-4B	. BUSHING, Insert (NA) (89372)	1		
-17	AN200KS4	. BEARING	1		
-18	NAS50-162	RING	2		
-19	AN201KP12A	BEARING	2		
-20	181-52443-3	SHAFT, Rudder control fuselage station 125 bellcrank	1		
-21	AN6227-17	PACKING	2		
-22	2W18-1416L	WASHER, Flat (NA) (89372)	2		
-23	187-52207	SEAL, Surface control cockpit pressure	2		
-24	181-520224	SEAL, Surface control antifriction pressure	2		
-25	AN6H6A	BOLT	1		
-26	2W1AL25-30-91	WASHER, Plain (NA) (89372)	1		
-27	AN310-4	NUT	1		
-28	2W18-416	WASHER, Flat (NA) (89372)	2		
-29	AN4-16	BOLT	1		
-30	181-52207-5	ARM ASSEMBLY, Horizontal stabilizer control fuselage station 124.438	1		
-31	AN200KS4	. BEARING	1		
-32	AN6H6A	BOLT	1		
-33	2W1AL25-30-91	WASHER, Plain (NA) (89372)	1		
-34	AN310-4	NUT	1	AE	
-35	2W18-416	WASHER, Flat (NA) (89372)	2	AE	
-36	AN4-17	BOLT	1	AE	
-37	181-52206-6	ARM ASSEMBLY, Horizontal stabilizer control fuselage station 124 inboard RH	1	AE	364
-38	AN201KP3A	. BEARING	2	AE	364
-39	181-52208	SHAFT, Horizontal stabilizer control fuselage station 124 bellcrank	1		
-40	181-52226	BOBWEIGHT, Horizontal stabilizer control	1	AE	
	ATTACHING PARTS				
-41	AN365-428	NUT	2	AE	
-42	AN970-4	WASHER	2	AE	
-43	AN4-20A	BOLT	2	AE	
-44	2W18-416M	WASHER, Flat (NA) (89372)	2	AE	
	---*---				
	4B19S4-110	. BUSHING, Press fit plain (NA) (89372)	2	AE	
-45	R87-1002-30-00	REGULATOR ASSEMBLY (PAS) (45402)	1	AF	
-46	AN201KP3A	. BEARING	2	AF	
-47	AN320-4	NUT	1	AF	
-48	2W18-416	WASHER, Flat (NA) (89372)	2	AF	
-49	AN24-16	BOLT	1	AF	
-50	209-52226-3	BOBWEIGHT, Horizontal stabilizer control	1	AF	
	ATTACHING PARTS				
-51	AN365-428	NUT	2	AF	
-52	AN970-4	WASHER	2	AF	
-53	AN4-12A	BOLT	2	AF	
-54	2W18-416M	WASHER, Flat (NA) (89372)	2	AF	
	---*---				
	4B19S4-110	. BUSHING, Press fit plain (NA) (89372)	2	AF	
-55	181-52007	SUPPORT, Surface control fuselage station 124 RH bellcrank	1		
-56	AN365-428	NUT	1		
-57	2W18-416L	WASHER, Flat (NA) (89372)	2		
-58	NAS428-4-11	BOLT	1		

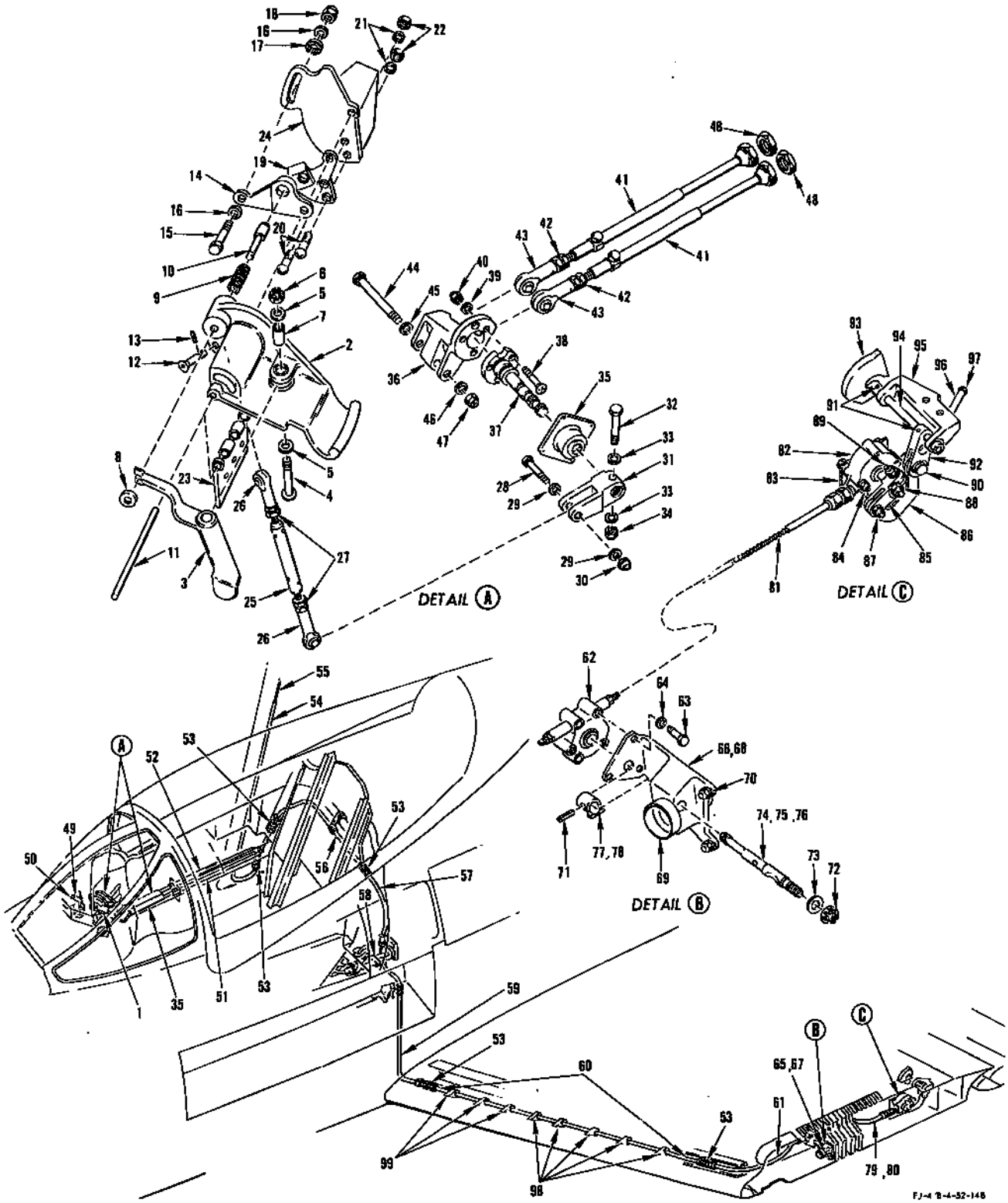

FIGURE 193 - WINGFOLD LOCK AND FLAG CONTROL MECHANISM

FIGURE & INDEX NO.	PART NUMBER	1 2 3 4 5 6 7 NOMENCLATURE	UNITS PER ASSY.	USABLE ON CODE	S/C NO.
193-1	194-52025	HANDLE ASSEMBLY, Wingfold lock and control system	1	BR	
	194-52025-11	HANDLE ASSEMBLY, Wingfold lock and control system	1	BS	
-2	194-52023	. HANDLE, Wingfold lock control system	1		
-3	215-52021	. LEVER ASSEMBLY, Wingfold lock control system (supersedes 194-52021 for future procurement)	1		

RUDDER, STABILIZER AND AILERON BELLCRANK AND SECTOR ASSEMBLY

FIGURE & INDEX NO.	PART NUMBER	1 2 3 4 5 6 7 NOMENCLATURE	UNITS PER ASSY.	USABLE ON CODE	S/C NO.
191-4	AN310-4	NUT	1		
-5	2W18-416	WASHER, Flat (NA) (89372)	2		
-6	AN4-10	BOLT	1		
-7	NAS50-162	RING	1		
-8	AN201KP12A	BEARING	1		
-9	AN8H6A	BOLT	1		
-10	2W1AL33-30-91	WASHER, Plain (NA) (89372)	1		
-11	AN365-428	NUT	1		
-12	2W18-416	WASHER, Flat (NA) (89372)	1		
-13	AN509-416R25	BOLT	1		
-14	181-52308-5	ARM ASSEMBLY, Aileron control fuselage station 119.937 bellcrank inboard	1		
-15	AN206DSP4	. BEARING	1		
-16	AN201KP12A	BEARING	1		
-17	2W1-48-36-64	WASHER, Plain (NA) (89372)	1		
-18	165-52006	SPRING, Compression	1		
-19	209-52348	SHAFT, Aileron control fuselage station 119.375 bellcrank	1		
-20	AN6227-17	PACKING	1		
-21	2W18-1416L	WASHER, Flat (NA) (89372)	1		
-22	187-52007	SEAL, Surface control cockpit pressure	1		
-23	AN8H6A	BOLT	1		
-24	2W1AL33-30-91	WASHER, Plain (NA) (89372)	1		
-25	AN310-4	NUT	1		
-26	2W18-416	WASHER, Flat (NA) (89372)	2		
-27	AN4-15	BOLT	1		
-28	181-52444-15	SECTOR ASSEMBLY, Rudder actuating fuselage station 124 cable	1		
-29	1P7	. PLUG, Control stop (NA) (89372)	1		
-30	AN201KP12A	BEARING	2		
-31	2W1-48-36-64	WASHER, Plain (NA) (89372)	2		
-32	165-52006	SPRING, Compression	2		
-33	181-52443-3	SHAFT, Rudder control fuselage station 125 bellcrank	1		
-34	AN6227-17	PACKING	2		
-35	2W18-1416L	WASHER, Flat (NA) (89372)	2		
-36	187-52007	SEAL, Surface control cockpit pressure	2		
-37	AN364-524	NUT	1		
-38	2W1AL21-30-91	WASHER, Plain (NA) (89372)	1		
-39	AN365-428	NUT	1		
-40	2W18-416	WASHER, Flat (NA) (89372)	2		
-41	AN4-15A	BOLT	1		
-42	181-52445-11	ARM ASSEMBLY, Rudder control fuselage station 125 bellcrank (supersedes 181-52445-5 for future procurement)	1		
-43	4B22-4B	. BUSHING, Insert (NA) (89372)	1		
	AN200KS4	. BEARING	1		
-44	NAS50-162	RING	2		
-45	AN201KP12A	BEARING	2		
-46	AN6H6A	BOLT	1		
-47	2W1AL25-30-91	WASHER, Plain (NA) (89372)	1		
-48	AN310-4	NUT	1		
-49	2W18-416	WASHER, Flat (NA) (89372)	2		
-50	AN4-15	BOLT	1		
-51	181-52207-5	ARM ASSEMBLY, Horizontal stabilizer control fuselage station 124.438	1		
-52	AN200KS4	. BEARING	1		
-53	181-52208	SHAFT, Horizontal stabilizer control fuselage station 124 bellcrank	1		
-54	AN6H6A	BOLT	1		
-55	2W1AL21-30-91	WASHER, Plain (NA) (89372)	1		
-56	181-52206-5	ARM ASSEMBLY, Horizontal stabilizer control fuselage station 124 inboard LH	1	AE	364
-57	AN201KP3A	. BEARING	2	AE	
-58	AN310-4	NUT	1	AE	
-59	2W18-416	WASHER, Flat (NA) (89372)	2	AE	
-60	AN4-17	BOLT	1	AE	
-61	181-52226	BOBWEIGHT, Horizontal stabilizer control	1	AE	
	ATTACHING PARTS				
-62	AN365-428	NUT	2	AE	
-63	AN970-4	WASHER	2	AE	
-64	AN4-20A	BOLT	2	AE	
-65	2W18-416	WASHER, Flat (NA) (89372)	2	AE	
	---*---				
	4B19S4-110	. BUSHING, Press fit plain (NA) (89372)	2	AE	
-66	R87-1001-30-00	REGULATOR ASSEMBLY (PAS) (45402)	1	AF	
-67	AN201KP3A	. BEARING	2	AF	
-68	AN320-4	NUT	1	AF	
-69	2W18-416	WASHER, Flat (NA) (89372)	2	AF	
-70	AN24-16	BOLT	1	AF	
-71	209-52226-3	BOBWEIGHT, Horizontal stabilizer control	1	AF	
-72	AN365-428	NUT	2	AF	
-73	AN970-4	WASHER	2	AF	
-74	AN4-12A	BOLT	2	AF	
-75	2W18-416M	WASHER, Flat (NA) (89372)	2	AF	
	4B19S4-110	. BUSHING, Press fit plain (NA) (89372)	2	AF	
-76	181-52006	SUPPORT ASSEMBLY, Surface control fuselage station 124 LH bellcrank	1		
-77	AN365-428	NUT	1		
-78	2W18-416L	WASHER, Flat (NA) (89372)	2		
-79	NAS428-4-11	BOLT	1		

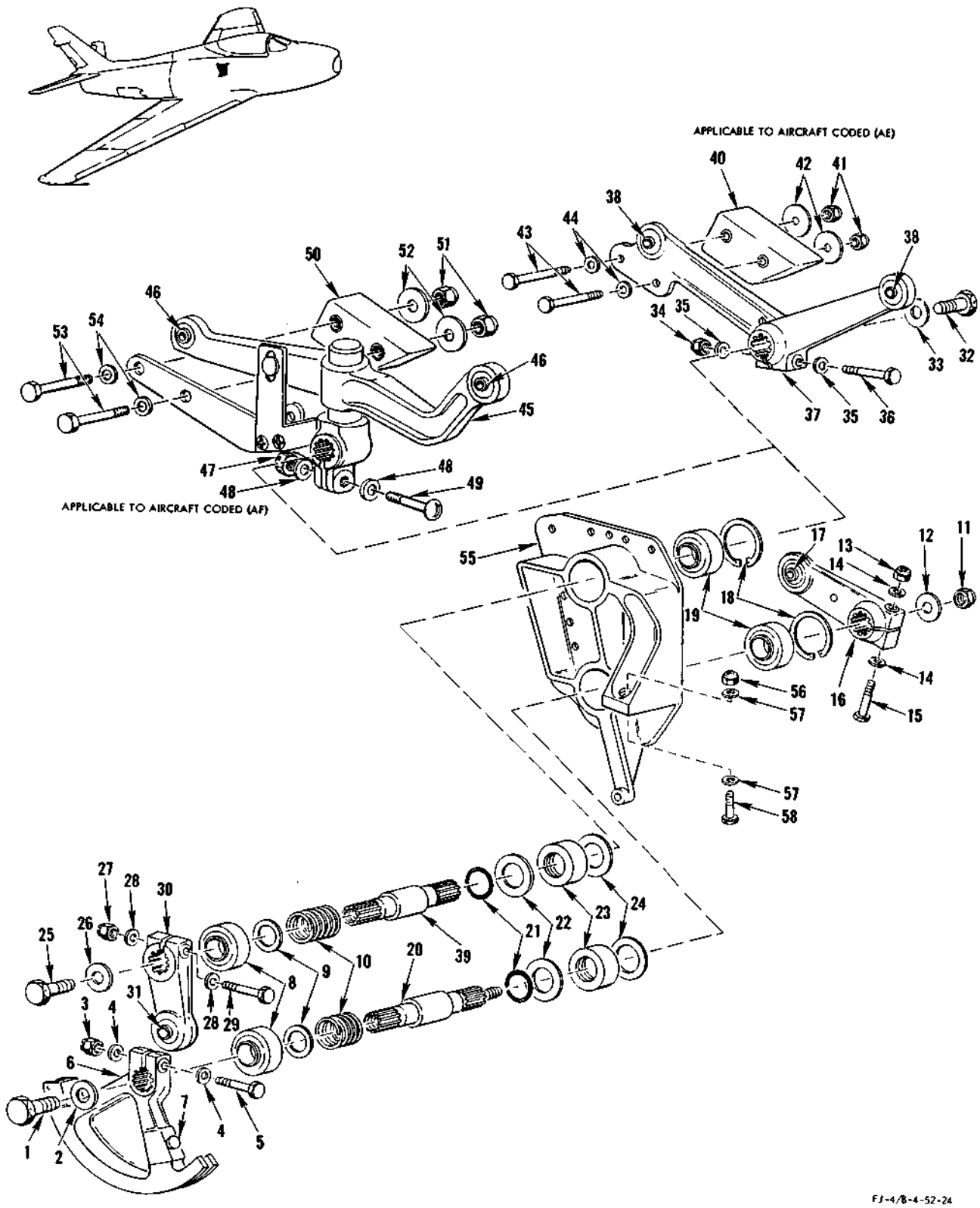

FIGURE 192 - RH RUDDER AND STABILIZER BELLCRANK AND SECTOR ASSEMBLY

RH RUDDER AND STABILIZER BELLCRANK AND SECTOR ASSEMBLY

FIGURE & INDEX NO.	PART NUMBER	1 2 3 4 5 6 7 NOMENCLATURE	UNITS PER ASSY.	USABLE ON CODE	S/C NO.
192-1	AN8H6A	BOLT	1		
-2	2W1AL33-30-91	WASHER, Plain (NA) (89372)	1		
-3	AN310-4	NUT	1		
-4	2W18-416	WASHER, Flat (NA) (89372)	2		
-5	AN4-15	BOLT	1		
-6	181-52444-16	SECTOR ASSEMBLY, Rudder actuating fuselage station 124 cable	1		
-7	1P7	. PLUG, Control stop (NA) (89372)	1		
-8	AN201KP12A	BEARING	2		
-9	2W1-48-36-64	WASHER, Plain (NA) (89372)	2		
-10	165-52005	SPRING, Compression	2		
-11	AN364-524	NUT	1		
-12	2W1AL21-30-91	WASHER, Plain (NA) (89372)	1		
-13	AN365-428	NUT	1		
-14	2W18-416	WASHER, Flat (NA) (89372)	2		
-15	AN4-15A	BOLT	1		
-16	181-52445-11	ARM ASSEMBLY, Rudder control fuselage station 125 bellcrank (supersedes 181-52445-5 for future procurement)	1		
	4B22-4B	. BUSHING, Insert (NA) (89372)	1		
-17	AN200KS4	. BEARING	1		
-18	NAS50-162	RING	2		
-19	AN201KP12A	BEARING	2		
-20	181-52443-3	SHAFT, Rudder control fuselage station 125 bellcrank	1		
-21	AN6227-17	PACKING	2		
-22	2W18-1416L	WASHER, Flat (NA) (89372)	2		
-23	187-52207	SEAL, Surface control cockpit pressure	2		
-24	181-520224	SEAL, Surface control antifriction pressure	2		
-25	AN6H6A	BOLT	1		
-26	2W1AL25-30-91	WASHER, Plain (NA) (89372)	1		
-27	AN310-4	NUT	1		
-28	2W18-416	WASHER, Flat (NA) (89372)	2		
-29	AN4-16	BOLT	1		
-30	181-52207-5	ARM ASSEMBLY, Horizontal stabilizer control fuselage station 124.438	1		
-31	AN200KS4	. BEARING	1		
-32	AN6H6A	BOLT	1		
-33	2W1AL25-30-91	WASHER, Plain (NA) (89372)	1		
-34	AN310-4	NUT	1	AE	
-35	2W18-416	WASHER, Flat (NA) (89372)	2	AE	
-36	AN4-17	BOLT	1	AE	
-37	181-52206-6	ARM ASSEMBLY, Horizontal stabilizer control fuselage station 124 inboard RH	1	AE	364
-38	AN201KP3A	. BEARING	2	AE	364
-39	181-52208	SHAFT, Horizontal stabilizer control fuselage station 124 bellcrank	1		
-40	181-52226	BOBWEIGHT, Horizontal stabilizer control	1	AE	
	ATTACHING PARTS				
-41	AN365-428	NUT	2	AE	
-42	AN970-4	WASHER	2	AE	
-43	AN4-20A	BOLT	2	AE	
-44	2W18-416M	WASHER, Flat (NA) (89372)	2	AE	
	---*---				
	4B19S4-110	. BUSHING, Press fit plain (NA) (89372)	2	AE	
-45	R87-1002-30-00	REGULATOR ASSEMBLY (PAS) (45402)	1	AF	
-46	AN201KP3A	. BEARING	2	AF	
-47	AN320-4	NUT	1	AF	
-48	2W18-416	WASHER, Flat (NA) (89372)	2	AF	
-49	AN24-16	BOLT	1	AF	
-50	209-52226-3	BOBWEIGHT, Horizontal stabilizer control	1	AF	
	ATTACHING PARTS				
-51	AN365-428	NUT	2	AF	
-52	AN970-4	WASHER	2	AF	
-53	AN4-12A	BOLT	2	AF	
-54	2W18-416M	WASHER, Flat (NA) (89372)	2	AF	
	---*---				
	4B19S4-110	. BUSHING, Press fit plain (NA) (89372)	2	AF	
-55	181-52007	SUPPORT, Surface control fuselage station 124 RH bellcrank	1		
-56	AN365-428	NUT	1		
-57	2W18-416L	WASHER, Flat (NA) (89372)	2		
-58	NAS428-4-11	BOLT	1		

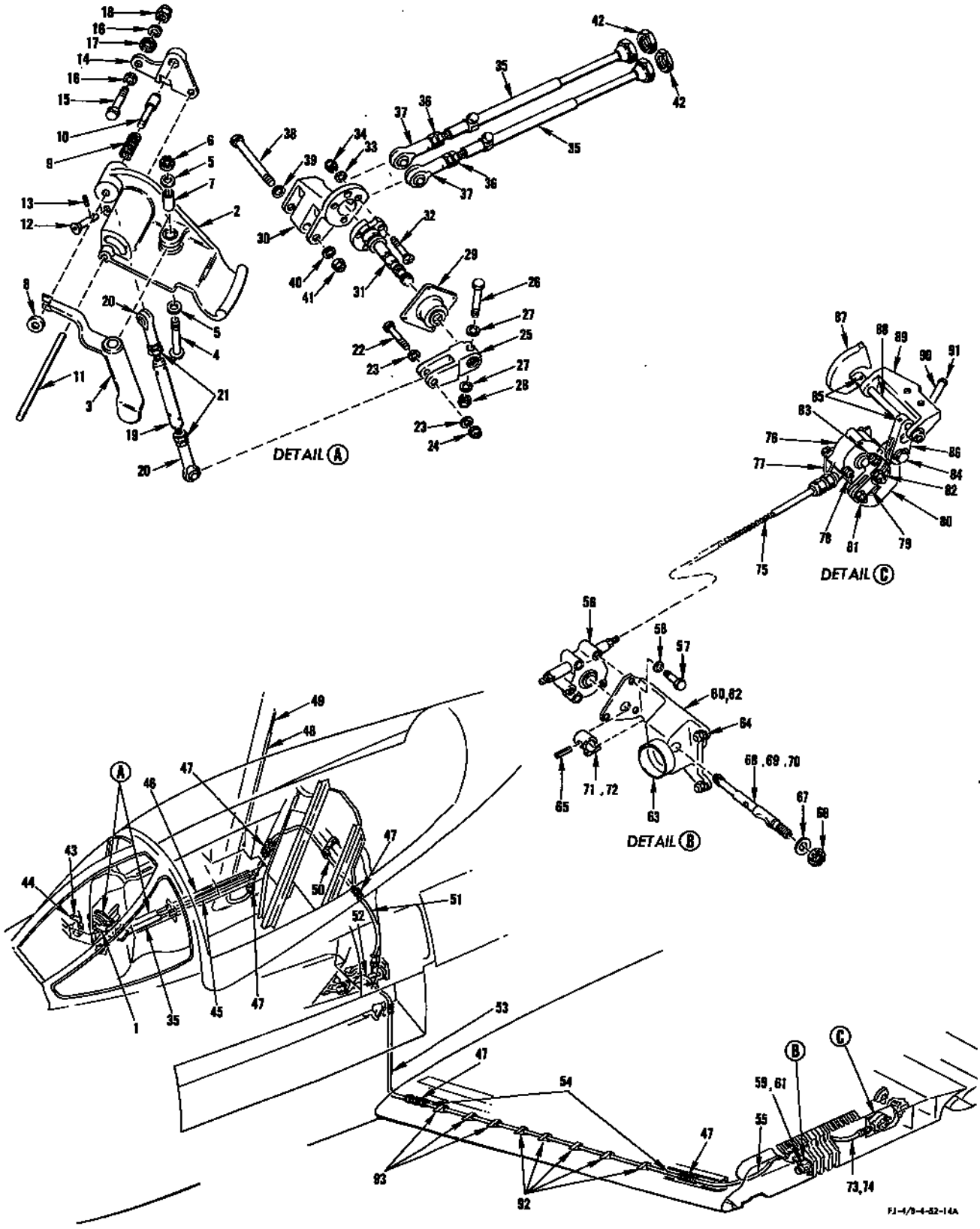

FIGURE 193 - WINGFOLD LOCK AND FLAG CONTROL MECHANISM

WINGFOLD LOCK AND FLAG CONTROL MECHANISM

FIGURE & INDEX NO.	PART NUMBER	1 2 3 4 5 6 7 NOMENCLATURE	UNITS PER ASSY.	USABLE ON CODE	S/C NO.
193		ATTACHING PARTS			
-4	AN23-21	. BOLT	1		
-5	2W18-10L	. WASHER, Flat (NA) (89372)	2		
-6	AN320-3	. NUT (install finger tight)	1		
		---*---			
-7	4B19B3-016	. . BUSHING, Plain (NA) (89372)	1		
-8	194-52012	. WASHER, Wingfold lock system handle lever	1		
-9	194-52024	. SPRING, Compression	1		
-10	194-52022	. PLUNGER, Wingfold lock system handle lever	1		
-11	AN253-4-406	PIN (stake inboard end one place)	1		
-12	194-52013	PIN, Wingfold lock control system rod connecting	1		
-13	79-012-062-0750	ROLLPIN (EN) (72962)	1		
-14	194-52017	STOP, Wingfold lock control system handle support upper	1		
		ATTACHING PARTS			
-15	AN4-7A	BOLT	1		
-16	2W18-416M	WASHER, Flat (NA) (89372)	2		
-17	194-52019	WASHER, Wingfold control system handle support upper stop	1		
-18	AN365-428	NUT	1		
		---*---			
-19	194-52018	STOP, Wingfold lock control system handle support lower	1		
		ATTACHING PARTS			
-20	AN509-8R13	BOLT	2		
-21	2W18-10	WASHER, Flat (NA) (89372)	2		
-22	AN365-1032	NUT	2		
		---*---			
-23	181-520116	HINGE, Wingfold lock system control handle pivot	1		
-24	194-52016	SUPPORT, Wingfold lock control system handle stop	1		
	194-52020	ROD ASSEMBLY, Wingfold lock system handle	1		
-25	194-52020-11	. ROD SUBASSEMBLY, Wingfold lock system handle	1		
-26	REB3N2	. ROD END (FAF) (21335)	2		
-27	AN316-5	. NUT	2		
-28	AN3-13A	BOLT	1		
-29	2W18-10M	WASHER, Flat (NA) (89372)	2		
-30	AN365-1032	NUT	1		
-31	181-52075-5	ARM, Wingfold lock releasing fuselage station 79	1		
-32	AN4-12A	BOLT (install with head aft)	1		
-33	2W18-416M	WASHER, Flat (NA) (89372)	2		
-34	AN365-428	NUT	1		
-35	181-520101	SUPPORT ASSEMBLY, Wingfold lock release cable sector	1		
	4B20B14-010	. BUSHING, Press fit flanged (NA) (89372)	1		
	4B20B8-010	. BUSHING, Press fit flanged (NA) (89372)	1		
	209-52044	BELLCRANK ASSEMBLY, Wingfold lock teleflex fuselage station 79.406	1		
-36	209-52043	. BELLCRANK, Wingfold lock teleflex fuselage station 79.406	1		
-37	181-52075-11	. SHAFT ASSEMBLY, Wingfold lock releasing station 79	1		
-38	AN509-10R13	. BOLT	3		
-39	2W18-10M	. WASHER, Flat (NA) (89372)	3		
-40	AN365-1032	. NUT	3		
-41	C7744-24	TELESCOPIC UNIT (TEX) (78710)	2		
-42	1N7-5	NUT, Check (NA) (89372)	2		
-43	RE4F5	ROD END (FAF) (21335)	2		
-44	AN4-23A	BOLT	1		
-45	2W18-416L	WASHER, Flat (NA) (89372)	1		
-46	2W18-416	WASHER, Flat (NA) (89372)	1		
-47	AN365-428	NUT	1		
-48	1N7-10A	NUT, Check (NA) (89372)	2		
-49	194-52039	HANDLE ASSEMBLY, Wingfold lock control switch actuating (supersedes 181-520113 for future procurement)	1		
		ATTACHING PARTS			
-50	AN3-5A	BOLT	2		
	4B21S3-007	BUSHING, Spacer (NA) (89372)	2		
	2W18-10M	WASHER, Flat (NA) (89372)	4		
	AN365-1032	NUT	2		
		---*---			
	4B19S5-006	. BUSHING, Plain (NA) (89372)	1		
-51	209-52030-127	CONDUIT ASSEMBLY, Wingfold lock and flag mechanism	1		
-52	209-52030-125	CONDUIT ASSEMBLY, Wingfold lock and flag mechanism	1		
-53	A6329	CONNECTOR (TEX) (78710)	1		
-54	209-52032-159	CONDUIT ASSEMBLY, Wingfold lock and flag mechanism (supersedes 209-52030-111 and -147 for future procurement)	1		
-55	209-52029-5	CABLE, Teleflex	1		
-56	209-52030-129	CONDUIT ASSEMBLY, Wingfold lock and flag mechanism	1		
-57	209-52030-209	CONDUIT ASSEMBLY, Wingfold lock and flag mechanism (supersedes 209-52030-131 for future procurement)	1		
-58		AILERON CONTROL CENTERING MECHANISM DRIVE ASSEMBLY AND SECTOR (see figure 194 for breakdown)			
-59	209-52030-133	CONDUIT ASSEMBLY, Wingfold lock and flag mechanism LH (supersedes 209-52030-130 for future procurement)	1		
-60	209-52030-153	CONDUIT ASSEMBLY, Wingfold lock and flag mechanism LH (supersedes 209-52030-139 for future procurement)	1		
	209-52030-155	CONDUIT ASSEMBLY, Wingfold lock and flag mechanism RH (supersedes 209-52030-144 for future procurement)	1		
-61	209-52030-149	CONDUIT ASSEMBLY, Wingfold lock and flag mechanism LH (supersedes 209-52030-143 for future procurement)	1		
	209-52030-143	CONDUIT ASSEMBLY, Wingfold lock and flag mechanism LH (supersedes 209-52030-135 for future procurement)	1		

WINGFOLD LOCK AND FLAG CONTROL MECHANISM

FIGURE & INDEX NO.	PART NUMBER	1 2 3 4 5 6 7 NOMENCLATURE	UNITS PER ASSY.	USABLE ON CODE	S/C NO.
193	209-52030-151	CONDUIT ASSEMBLY, Wingfold lock and flag mechanism RH (supersedes 209-52030-144 for future procurement)	1		
	209-52030-144	CONDUIT ASSEMBLY, Wingfold lock and flag mechanism RH (supersedes 209-52030-137 for future procurement)	1		
-62	C10620-1	TELEFLEX BOX (TEX) (78710) (LH side)	1		
	C10620-2	TELEFLEX BOX (TEX) (78710) (RH side)	1		
-63	AN3H5A	BOLT	3		
-64	2W18-10M	WASHER, Flat (NA) (89372)	3		
-65	209-52065-1	HOUSING, Wingfold lockpin lock assembly of LH	1	AW	
	209-52065-2	HOUSING, Wingfold lockpin lock assembly of RH	1	AW	
-66	209-52065-3	. HOUSING, Wingfold lockpin lock LH	1	AW	
	209-52065-4	. HOUSING, Wingfold lockpin lock RH	1	AW	
-67	209-52057-11	SUPPORT, Wingfold lockpin lock assembly of LH (supersedes 209-52033-1 for future procurement)	1	BY	
	209-52057-12	SUPPORT, Wingfold lockpin lock assembly of RH (supersedes 209-52033-2 for future procurement)	1	BY	
-68	209-52057-3	. SUPPORT, Wingfold lockpin lock LH	1	BY	
	209-52057-4	. SUPPORT, Wingfold lockpin lock RH	1	BY	
-69	209-14091-9	. BUSHING	1		
	ATTACHING PARTS				
-70	AN509-10R15	BOLT	3		
	2W18-10L	WASHER, Flat (NA) (89372)	3	AW	
	AN364-1032	NUT	3		
	2W18-10M	WASHER, Flat (NA) (89372)	3	BY	
	---*---				
-71	59-028-125-1000	ROLLPIN (EN) (72962)	1	A	
	AN23-16A	BOLT (install head up)	1	B	
	2W18-10M	WASHER, Flat (NA) (89372)	1	B	
	AN364-1032	NUT	1	B	
-72	AN320-6	NUT	1		
-73	2W18-616	WASHER, Flat (NA) (89372)	1		
-74	209-520122	PIN, Wingfold lockshaft mechanical locking	1	A	
-75	209-520122-3	PIN, Wingfold lockshaft mechanical locking	1	CB	
-76	209-520129	PIN, Wingfold lockshaft mechanical locking	1	BY	
-77	209-520123	STOP, Wingfold lock mechanical locking (magnetic inspected)	1	A	
-78	209-520123-3	STOP, Wingfold lock mechanical locking (magnetic inspected)	1	B	
-79	209-52030-117	CONDUIT ASSEMBLY, Wingfold lock and flag mechanism LH	1	AW	
	209-52030-119	CONDUIT ASSEMBLY, Wingfold lock and flag mechanism RH	1	AW	
-80	209-52030-245	CONDUIT ASSEMBLY, Wingfold lock and flag mechanism LH (supersedes 209-52030-145 for future procurement)	1	BY	
	209-52030-246	CONDUIT ASSEMBLY, Wingfold lock and flag mechanism RH (supersedes 209-52030-146 for future procurement)	1	BY	
-81	209-52029-3	CABLE, Teleflex	1		
-82	C6808-3	TELEFLEX BOX (TEX) (78710)	1		
-83	209-520106-1	BRACKET, Wingfold lock and flag mechanism LH	1		
-84	AN3-12A	BOLT	2		
	2W18-10M	WASHER, Flat (NA) (89372)	4		
	AN365-1032	NUT	2		
-85	209-520107-1	ARM, Wingfold and flag mechanism LH	1		
	209-520107-2	ARM, Wingfold and flag mechanism RH	1		
	4B20M-S3-004	. BUSHING, Press fit flanged (NA) (89372)	1		
-86	209-520105	LINK, Wingfold flag mechanism	1		
-87	AN509-10R16	SCREW	1		
	4B21B3-007	BUSHING, Spacer (NA) (89372)	1		
	2W18-10	WASHER, Flat (NA) (89372)	1		
	AN365-1032	NUT	1		
-88	AN364-524	NUT	1		
	2W18-516M	WASHER, Flat (NA) (89372)	1		
-89	AN509-10R17	SCREW	1		
	2W18-10M	WASHER, Flat (NA) (89372)	1		
	AN365-1032	NUT	1		
-90	AN4-11A	BOLT	1		
	2W13-4	WASHER, Serrated (NA) (89372)	1		
	4B21B4-010	BUSHING, Spacer (NA) (89372)	1		
	2W18-416	WASHER, Flat (NA) (89372)	1		
	AN365-428	NUT	1		
	209-520196-1	FLAG, Wingfold flag mechanism actuating assembly of LH	1		
	209-520196-2	FLAG, Wingfold flag mechanism actuating assembly of RH	1		
-91	52-022-094-0750	. ROLLPIN (EN) (72962)	2		
-92	209-520193	. ARM, Wingfold and flag mechanism	1		
-93	209-520195-1	. FLAG, Wingfold and flag mechanism LH	1		
	209-520195-2	. FLAG, Wingfold and flag mechanism RH	1		
-94	209-520109	. PIN, Wingfold and flag mechanism	1		
-95	209-520110-1	. SUPPORT ASSEMBLY, Wingfold and flag mechanism LH	1		
	209-520110-2	. SUPPORT ASSEMBLY, Wingfold and flag mechanism RH	1		
	4B19-B6-008	. . BUSHING (NA) (89372)	2		
-96	209-52030-157	CONDUIT ASSEMBLY, Wingfold lock and flag mechanism (supersedes 209-52030-121 and 209-52030-122 for future procurement)	1		
-97	AN470-6-4	RIVET	1		
-98	209-52680	GROMMET, Tube support wing leading edge LH	5		
	209-52681	GROMMET, Tube support wing leading edge RH	5		
-99	209-52687	GROMMET, Tube support wing leading edge LH	3		
	209-52686	GROMMET, Tube support wing leading edge RH	3		

WING FUEL DUMP CONTROL

FIGURE & INDEX NO.	PART NUMBER	1 2 3 4 5 6 7 NOMENCLATURE	UNITS PER ASSY.	USABLE ON CODE
195-1	209-48705	HANDLE, Wing fuel dump control emergency release	1	
-2	AN253-3-062	PIN	1	
-3	181-52084-3	RETAINER, Manual emergency flight control changeover handle (supersedes 181-52084 for future procurement)	1	
-4	AN365-1032	NUT	2	
-5	2W18-10M	WASHER, Flat (NA) (89372)	4	
-6	AN520-10R10	SCREW	2	
-7	209-487114	PLATE, Fuel dump handle mechanism	1	
-8	209-48798	SUPPORT, Wing fuel dump handle mechanism trunnion assembly	1	
	4B20M-S3-003	. BUSHING, Press fit flanged (NA) (89372)	2	
	209-48796	. TRUNNION SUPPORT, Wing fuel dump handle mechanism top	1	
	209-48797	. TRUNNION SUPPORT, Wing fuel dump handle mechanism	1	
-9	209-48795	TRUNNION, Wing fuel dump handle mechanism	1	
-10	209-48792	SPRING, Compression	1	
	209-48794	ROD ASSEMBLY, Wing fuel dump handle mechanism	1	
-11	209-48791	. TUBE, Wing fuel dump handle mechanism	1	
-12	209-48790	. SHAFT ASSEMBLY, Wing fuel dump handle mechanism	1	
-13	4B19B5-003	. . BUSHING, Press fit plain (NA) (89372)	1	
-14	AN364-1032	NUT	1	
-15	2W18-10M	WASHER, Flat (NA) (89372)	2	
-16	AN23-10A	BOLT	1	
-17	209-48786	BELLCRANK ASSEMBLY, Wing fuel dump handle mechanism (superseded by 209-48786-11- for future procurement)	1	LE
	209-48786-11	BELLCRANK ASSEMBLY, Wing fuel dump handle mechanism (supersedes 209-48786 for future procurement)	1	KY
	209-48785	. SECTOR ASSEMBLY, Wing fuel dump handle mechanism bellcrank assembly	1	
	AN207DP3	. . BEARING	1	
	209-487143	. BUSHING, Wing fuel dump handle mechanism	1	
	209-487142	. SPACER, Wing fuel dump handle mechanism	1	
-18	26C-02	NUT (NUS) (80539) (dome nut to be inside)	1	
-19	2W18-10M	WASHER, Flat (NA) (89372)	1	
-20	AN23-20A	BOLT	1	
-21	209-54225-23	BRACKET, Center electrical pedestal shield assembly	1	
-22	209-48789	CAM, Wing fuel dump handle mechanism torsion	1	
-23	AN200K3L	. BEARING	1	
-24	26C-02	NUT (NUS) (80539)	1	
-25	2W18-10M	WASHER, Flat (NA) (89372)	2	
-26	209-48793	SPRING, Wing fuel dump handle mechanism torsion	1	
-27	2W2SP12-18-468	WASHER, Thrust (NA) (89372)	1	
-28	AN23-19A	BOLT	1	
-29	26C-02	NUT (NUS) (80539)	1	
-30	2W18-10M	WASHER, Flat (NA) (89372)	2	
-31	4B19S3-023	BUSHING, Press fit plain (NA) (89372)	1	
-32	AN23-19A	BOLT	1	
-33	MC2711	ACTUATOR (MCS) (91929)	1	ET
-34	209-48788	SUPPORT, Wing fuel dump mechanism	1	
-35	209-487112	CABLE ASSEMBLY, Wing fuel dump system	1	
	RA2487-3	. BALL (ACA) (01976)	1	
	AN664C3	. TERMINAL	1	
-36	209-48799	BRACKET ASSEMBLY, Wing fuel dump system fuselage station 56.734	1	
	ATTACHING PARTS			
	AN3-6A	BOLT	4	
	2W18-10	WASHER, Flat (NA) (89372)	8	
	AN365-1032	NUT	4	
	---*---			
	AN219-4	. PULLEY	1	
	ATTACHING PARTS			
	AN4-11A	. BOLT	1	
	2W18-416	. WASHER, Flat (NA) (89372)	1	
	AN365-428	. NUT	1	
	---*---			
	NAS427K9	. PIN	2	
-37	RA2258-3	DISCONNECT (ACA) (01926)	1	
-38	181-52016	PLATE, Control cable seal base	1	
	7R5	RETAINER, Control cable pressure seal (NA) (89372)	1	
	3S11-3	SEAL, Control cable pressure (NA) (89372)	1	
	ATTACHING PARTS			
	NAS221-13	SCREW	2	
	2W18-10M	WASHER, Flat (NA) (89372)	2	
	---*---			
-39	181-48753	BRACKET ASSEMBLY, Wing fuel drop tank emergency release cable fuselage station 53 outboard pulley	1	
	ATTACHING PARTS			
	NAS221-18	SCREW	2	
	NAS43DD3-31	SPACER	2	
	2W18-10	WASHER, Flat (NA) (89372)	4	
	AN365-1032	NUT	2	
	---*---			
	AN210-2B	. PULLEY	1	
	ATTACHING PARTS			
	AN3-7A	. BOLT	1	
	2W18-10	. WASHER, Flat (NA) (89372)	2	
	AN365-1032	. NUT	1	
	---*---			

WING FUEL DUMP CONTROL

FIGURE & INDEX NO.	PART NUMBER	1 2 3 4 5 6 7 NOMENCLATURE	UNITS PER ASSY.	USABLE ON CODE
195	NAS427K9	PIN	2	
	181-48783	CLIP, Wing fuel drop tank emergency release fuselage station 53 bracket attaching	1	
	ATTACHING PARTS			
	NAS221-10	SCREW	1	
	2W18-10	WASHER, Flat (NA)(89372)	3	
	AN365-1032	NUT	1	
	---*---			
-40	209-487111	CABLE ASSEMBLY, Wing fuel dump system forward outboard	1	
	AN664C3	. TERMINAL	2	
-41	181-48756	BRACKET ASSEMBLY, Wing fuel drop tank fuselage station 82.719 emergency release cable pulley	1	
	ATTACHING PARTS			
	AN3-4A	BOLT	2	
	AN3-5A	BOLT	1	
	2W18-10	WASHER, Flat (NA)(89372)	4	
	AN365-1032	NUT	2	
	---*---			
	AN210-2B	. PULLEY	1	
	ATTACHING PARTS			
	AN3-7A	. BOLT	1	
	2W18-10M	. WASHER, Flat (NA)(89372)	1	
	---*---			
	NAS427K9	PIN	2	
-42	209-487113	BRACKET, Wing fuel dump system station 94.047 pulley assembly	1	
	AN219-2	PULLEY	1	
	ATTACHING PARTS			
	AN4-11A	BOLT	1	
	2W18-416	WASHER, Flat (NA)(89372)	2	
	AN365-428	NUT	1	
	---*---			
-43	181-520161	CONNECTOR, Wingfold lock control system cable	1	
-44	209-48732	CABLE ASSEMBLY, Wing fuel dump valve emergency	2	
	AN664C3	. TERMINAL	1	
	AN669S3RH	. TERMINAL	1	
-45	AN155-16S	BARREL	2	
-46	209-48711	BRACKET ASSEMBLY, Drop tank and dump valve control fuselage station 127 pulley (see figure 196 for breakdown)	1	
	NAS427K16	PIN	2	
	NAS427K9	PIN	2	
-47	209-48733	CABLE ASSEMBLY, Wing fuel dump valve emergency release LH	1	
	AN664-C3	. TERMINAL	1	
	AN669S3LH	. TERMINAL	1	
-48	209-48713	BRACKET ASSEMBLY, Wing fuel dump valve control fuselage station 121.74 LH	1	
	AN219-2	. PULLEY	1	
	ATTACHING PARTS			
	AN4-13A	. BOLT	1	
	2W18-416M	. WASHER, Flat (NA)(89372)	2	
	AN365-428	. NUT	1	
	---*---			
	NAS427K16	PIN	1	
-49	209-48726	SEAL, Fume	1	
-50	209-48727	FAIRLEAD, Fume seal	1	
	ATTACHING PARTS			
	AN3-5A	BOLT	2	
	2W18-10M	WASHER, Flat (NA)(89372)	4	
	AN365-1032	NUT	2	
	---*---			
-51	209-48717-1	BRACKET ASSEMBLY, Wing fuel dump valve fuselage station 116.125 LH	1	
	209-48717-2	BRACKET ASSEMBLY, Wing fuel dump valve fuselage station 116.125 RH	1	
	AN219-2	. PULLEY	1	
	ATTACHING PARTS			
	AN4-15A	. BOLT	1	
	2W18-416	. WASHER, Flat (NA)(89372)	2	
	AN365-428	. NUT	1	
	---*---			
	NAS427W17	PIN	1	
-52	209-52693	FAIRLEAD ASSEMBLY, Inboard wing leading edge 0% station 110.43 (supersedes 209-52692 for future procurement)	4	
	ATTACHING PARTS			
	NAS334CPA7-5	BOLT	4	
	2W18-416	WASHER, Flat (NA)(89372)	4	
	EB-048	NUT (EN)(72962)	4	
	---*---			
-53	209-52695	FAIRLEAD ASSEMBLY, Inboard wing leading edge 0% station 174.438	2	
	ATTACHING PARTS			
	NAS334CPA7-5	BOLT	2	
	2W18-416	WASHER, Flat (NA)(89372)	2	
	EB-048	NUT (EN)(72962)	2	
	---*---			
-54	209-48730-1	BRACKET ASSEMBLY, Wing fuel dump valve emergency release wing station 160 LH	1	
	209-48730-2	BRACKET ASSEMBLY, Wing fuel dump valve emergency release wing station 160 RH	1	
	ATTACHING PARTS			
	HT4M-13	BOLT (HIS)(73197)	2	
	2W18-416	WASHER, Flat (NA)(89372)	2	

WING FUEL DUMP CONTROL

FIGURE & INDEX NO.	PART NUMBER	1 2 3 4 5 6 7 NOMENCLATURE	UNITS PER ASSY.	USABLE ON CODE
195	EB-048	NUT (EN) (72962)	2	
		---*---		
	4B24-64	. BUSHING	1	
	AN219-2	PULLEY	2	
		ATTACHING PARTS		
	AN24-15	BOLT	2	
	2W18-416	WASHER, Flat (NA) (89372)	2	
	2W18-416M	WASHER, Flat (NA) (89372)	2	
	AN364-428	NUT	2	
		---*---		
	NAS427T7	PIN	2	
-55	209-48715-1	BRACKET ASSEMBLY, Wing fuel dump valve emergency release and hydraulic swivel LH	1	
	209-48715-2	BRACKET ASSEMBLY, Wing fuel dump valve emergency release and hydraulic swivel RH	1	
		ATTACHING PARTS		
	AN507-1032R10	SCREW	3	
	AN507-1032R8	SCREW	1	
		---*---		
	AN219-2	. PULLEY	2	
		ATTACHING PARTS		
	AN4-10A	. BOLT	2	
	2W18-416	. WASHER, Flat (NA) (89372)	2	
		---*---		
	NAS427K25	PIN	2	
-56	111865	VALVE ASSEMBLY, LH (WTR) 79318 (see Fuel System)	1	
	111875	VALVE ASSEMBLY, LH (WTR) 79318 (see Fuel System)	1	
-57	209-48725-1	SUPPORT ASSEMBLY, Wing fuel dump valve sector LH	1	AW
	209-48725-2	SUPPORT ASSEMBLY, Wing fuel dump valve sector RH	1	AW
	209-48745-1	SUPPORT ASSEMBLY, Wing fuel dump valve sector LH	1	BY
	209-48745-2	SUPPORT ASSEMBLY, Wing fuel dump valve sector RH	1	BY
	4B19B4-010	. BUSHING, Press fit plain (NA) (89372)	1	BY
-58	209-48709-1	SECTOR ASSEMBLY, Wing fuel dump valve emergency release wing station 132.099 LH	1	AW
	209-48709-2	SECTOR ASSEMBLY, Wing fuel dump valve emergency release wing station 132.099 RH	1	AW
	209-52035	. BUSHING, Thin wall press fit	1	AW
	209-48709-11	SECTOR ASSEMBLY, Wing fuel dump valve emergency release wing station 132.099 LH	1	BY
	209-48709-12	SECTOR ASSEMBLY, Wing fuel dump valve emergency release wing station 132.099 RH	1	BY
	209-48746	. PIN, Wing fuel dump valve sector pivot	1	BY
	4B19B4-014	. BUSHING, Press fit plain (NA) (89372)	1	BY
-59	209-487130	ROD ASSEMBLY, Wing fuel dump valve control (supersedes 209-48722 for future procurement)	1	
	209-487134	. ROD END, Wing fuel dump valve control	1	
	AN315-3L	. NUT	1	
	209-487133	. TURNBUCKLE, Wing fuel dump valve control	1	
	209-52517	. NUT, Wing fuel dump valve control rod assembly	1	
	209-487132	. ROD END, Wing fuel dump valve	1	
-60	AN320-3	NUT	1	
-61	2W18-10M	WASHER, Flat (NA) (89372)	1	
-62	NAS333P13	BOLT	1	AW
	AN3-13	BOLT	1	BY
-63	AN364-1032	NUT	2	AW
	AN364-428	NUT	2	BY
-64	2W18-10M	WASHER, Flat (NA) (89372)	4	AW
	2W18-416M	WASHER, Flat (NA) (89372)	4	BY
-65	AN23-19A	BOLT	2	AW
	AN24-19A	BOLT	2	BY
-66	4B19B3-026	BUSHING, Press fit plain (NA) (89372)	2	AW
-67	AN320-3	NUT	1	
-68	2W18-10M	WASHER, Flat (NA) (89372)	2	
-69	AN23-14	BOLT (install with bolt head inboard)	1	
-70	4B21S3-013	BUSHING, Spacer (NA) (89372)	1	
-71	209-520128-1	CLIP ASSEMBLY, Wing fuel dump valve bungee LH	1	AW
	209-520128-2	CLIP ASSEMBLY, Wing fuel dump valve bungee RH	1	AW
	209-52084-1	CLIP ASSEMBLY, Wing fuel dump valve bungee (supersedes 209-520128-1 for future procurement)	1	BY
	209-52084-2	CLIP ASSEMBLY, Wing fuel dump valve bungee (supersedes 209-520128-2 for future procurement)	1	BY
	209-520118	BUNGEE ASSEMBLY, Fuel dump valve	1	AW
	209-52025-21	BUNGEE ASSEMBLY, Fuel dump valve (supersedes 209-52025 for future procurement)	1	BY
	209-520118-11	. BUNGEE SUBASSEMBLY, Fuel dump valve (used on 209-520118)	1	AW
	209-52025-31	. BUNGEE SUBASSEMBLY, Fuel dump valve (supersedes 209-52025-11 for future procurement) (used on 209-52025-21)	1	BY
-72	209-520101	. . CLEVIS, Fuel dump valve bungee cylinder (used on 209-520118-11)	1	AW
-73	209-52022	. . CLEVIS, Fuel dump valve bungee cylinder (used on 209-52025-31)	1	BY
-74	209-520112	. . SPRING, Compression (used on 209-520118-11)	1	AW
-75	209-52020	. . SPRING, Compression (used on 209-52025-31)	1	BY
-76	209-520103	. . ROD, Fuel dump valve bungee (used on 209-520118-11)	1	AW
-77	209-52085	. . ROD, Fuel dump valve bungee (supersedes 209-52024 for future procurement) (used on 209-52025-31)	1	BY
-78	209-520126	. . HOUSING, Fuel dump valve bungee (used on 209-520118-11)	1	AW
-79	209-52023	. . HOUSING, Fuel dump valve bungee (used on 209-52025-31)	1	BY
-80	209-520102	. ROD END, Fuel dump valve bungee (used on 209-520118)	1	AW
-81	209-52021	. ROD END, Fuel dump valve bungee (used on 209-52025-21)	1	BY
-82	AN315-38	. NUT (used on 209-520118)	1	AW
-83	1N7-4A	. NUT, Check (NA) (89372) (used on 209-52025-21)	1	BY
-84	AN364-1032	NUT	1	

WING FUEL DUMP CONTROL

FIGURE & INDEX NO.	PART NUMBER	1 2 3 4 5 6 7 NOMENCLATURE	UNITS PER ASSY.	USABLE ON CODE
195-85	2W18-10	WASHER, Flat (NA) (89372) (install under head of bolt)	1	AW
-86	2W18-10M	WASHER, Flat (NA) (89372)	1	AW
-87	2W18-10M	WASHER, Flat (NA) (89372)	2	BY
-88	AN23-13A	BOLT	1	AW
	AN23-11A	BOLT	1	BY
-89	209-48708	FITTING, Wing fuel dump valve support	1	AW
-90	AN3-7A	BOLT	1	
	2W18-10	WASHER, Flat (NA) (89372)	1	
-91	AN3-12A	BOLT	2	AW
	2W18-10M	WASHER, Flat (NA) (89372)	4	AW
	AN365-1032	NUT	2	AW
	NAS464-5A30	BOLT	1	BY
	NAS464-6A30	BOLT	1	BY
-92	209-48712-11	BRACKET ASSEMBLY, Fuel dump valve control (see figure 196 for breakdown)	1	
	NAS427K34	PIN	2	
-93	209-48734	CABLE ASSEMBLY, Wing fuel dump valve emergency release RH	1	K
	AN664C3	. TERMINAL	1	
	AN669S3LH	. TERMINAL	1	
	209-487121	CABLE ASSEMBLY, Gun bay to fuel vent valve	1	L
	RA2487-3	. BALL (ACA) (01976)	1	
	AN669S3RH	. TERMINAL	1	
	AN669S3LH	. TERMINAL	1	
-94	209-487122-3	BUNGEE ASSEMBLY, Vent shutoff valve	1	L
	ATTACHING PARTS			
-95	AN320-3	NUT	1	L
-96	2W18-10	WASHER, Flat (NA) (89372)	2	L
-97	AN3-7	BOLT (finger tight to 1/2 thread loose)	1	L
	---*---			
-98	209-487120	. CONNECTOR, Fuel dump cable to overload bungee	1	L
-99	1N7-4A	. NUT, Check (NA) (89372)	1	L
-100	209-52023-3	. HOUSING, Fuel dump bungee	1	L
-101	209-487124	. SPRING, Compression	1	L
-102	209-487123	. WASHER, Vent shutoff bungee	1	L
-103	209-487118	. ROD, Bungee tension	1	L
-104	209-487117	. CLEVIS, Vent shutoff valve bungee	1	L
-105	LH1330	VALVE ASSEMBLY (Lourdes Hydraulics, Inc.) (01178) (see Fuel System)	1	MS
-106	116465	VALVE ASSEMBLY (WTR) (94256) (79318) (see Fuel System)	1	MR
-107	209-48750	LINK ASSEMBLY, Vent shutoff valve to pressure valve (superseded by 209-48750-11 for future procurement)	1	MR
-108	209-48750-11	LINK ASSEMBLY, Vent shutoff valve to pressure valve (supersedes 209-48750 for future procurement)	1	MS
	209-48750-3	. ROD, Vent shutoff valve to pressure valve link assembly	1	MR
	209-48750-5	. ROD, Vent shutoff valve to pressure valve link assembly	1	MS
	1N7-4	. NUT, Check (NA) (89372)	2	L
	AN486-3	. CLEVIS	2	L
-109	AN320-3	NUT	2	L
-110	2W18-10	WASHER, Flat (NA) (89372)	2	L
-111	2W18-10M	WASHER, Flat (NA) (89372)	2	L
-112	AN3-7	BOLT	2	L
-113	4-354-1	VALVE (SZT) (82267) (see Fuel System)	1	
-114	209-487116	BRACKET ASSEMBLY, Wing fuel dump valve and special stores (supersedes 209-48710 for future procurement)	1	
	AN219-2	. PULLEY	2	
	ATTACHING PARTS			
	AN4-23	. BOLT	1	
	2W18-416M	. WASHER, Flat (NA) (89372)	2	
	NAS43-4-63	. SPACER	1	
	AN365-428	. NUT	1	
	---*---			
	NAS427K31	PIN	2	
-115	209-52045	PLATE, Fume seal	1	
-116	209-52049	SEAL, Control cable	1	
-117	AN155-16S	BARREL	1	L
-118	209-48714	BRACKET ASSEMBLY, Wing fuel dump emergency release fuselage station 123 RH	1	
	AN219-2	. PULLEY	2	
	ATTACHING PARTS			
	AN4-21A	. BOLT	1	
	NAS43DD4-36	. SPACER	1	
	2W18-416	. WASHER, Flat (NA) (89372)	2	
	AN365-428	. NUT	1	
	---*---			
	NAS427K25	PIN	1	
-119	209-52046	FAIRLEAD, Fume seal	1	
-120	209-52049	SEAL, Control cable	1	
-121	209-48747	CABLE ASSEMBLY, Wing fuel dump RH outboard	1	L
	AN664C3	. TERMINAL	1	L
	AN669S3LH	. TERMINAL	1	L

SPECIAL STORES AND DROP TANK RELEASE CONTROL

FIGURE & INDEX NO.	PART NUMBER	1 2 3 4 5 6 7 NOMENCLATURE	UNITS PER ASSY.	USABLE ON CODE	S/C NO.
196-1	209-487109	HANDLE, External stores emergency jettison system assembly of	1	BJ	366
-2	209-487109-21	HANDLE, External stores emergency jettison system assembly of (supersedes 209-487109-11 for future procurement)	1	BX	
	ATTACHING PARTS				
-3	AN365-1032	NUT	2		
-4	2W18-10	WASHER, Flat (NA) (89372)	4		
-5	AN520-10R10	SCREW	2		
	---*---				
-6	AN565B8H5	. SETSCREW	1		
-7	209-487108	. HANDLE, External stores emergency jettison system	1	BJ	
-8	209-487108-3	. HANDLE, External stores emergency jettison system	1	BK	
-9	52-012-062-0437	. . ROLLPIN (EN) (72962)	1	BK	
-10	181-48779-3	. SUPPORT, Wing fuel tank emergency release handle	1	BJ	366
-11	209-487125-3	. SUPPORT, Wing fuel tank release handle (supersedes 209-487125 for future procurement)	1	BK	
-12	209-487107	. ROD, External stores emergency jettison system	1		
-13	REB3N	. ROD END (FAF) (21335)	1		
-14	AN365-1032	NUT	1		
-15	2W18-10	WASHER, Flat (NA) (89372)	2		
-16	AN3-11A	BOLT	1		
-17	209-487101	BELLCRANK ASSEMBLY, External stores jettison system	1	LX	473
-18	209-487141-11	BELLCRANK ASSEMBLY, External stores jettison system (supersedes 209-487141 for future procurement)	1	LZ	
-19	AN365-1032	. NUT	2		
-20	2W18-10M	. WASHER, Flat (NA) (89372)	4		
-21	AN3-12A	. BOLT	2		
-22	209-487104	. BELLCRANK, External stores emergency jettison system	1		
-23	209-487102	. PIN, External stores	1		
-24	209-487103-11	. BELLCRANK, External stores emergency jettison system (supersedes 209-487103 for future procurement)	1	LX	
-25	209-487139	. BELLCRANK, External stores emergency jettison assembly of	1	LZ	
-26	4B19M-S3-006	. . BUSHING, Press fit plain (NA) (89372)	1		
-27	AN365-1032	NUT	1		
-28	2W18-10	WASHER, Flat (NA) (89372)	2		
-29	AN3-7A	BOLT	1		
-30	AN365-1032	NUT	1		
-31	2W18-10M	WASHER, Flat (NA) (89372)	2		
-32	AN3-5A	BOLT	1		
-33	AN365-1032	NUT	2		
-34	2W18-10M	WASHER, Flat (NA) (89372)	4		
-35	AN3-6A	BOLT	2		
-36	181-52080	SUPPORT ASSEMBLY, Manual emergency flight control changeover bellcrank	1	LX	
-37	4B20B9-014	. BUSHING, Press fit flanged (NA) (89372)	2	LX	
-38	NAS516-1	. FITTING, Lubricator	1	LX	
-39	209-487140	SUPPORT, External stores emergency jettison system bellcrank assembly of	1	LZ	
	4B20B9-014	. BUSHING, Press fit flanged (NA) (89372)	1	LZ	
-40	209-487137	. BUSHING, Emergency release system external stores	1	LZ	
-41	NAS516-1	. FITTING, Lubricator	1	LZ	
-42	209-487106	BRACKET, Microswitch support	1	LX	473
-43	209-487138	BRACKET, Emergency jettison system microswitch support	1	LZ	
-44	AN364-832	NUT	2		
-45	2W18-8	WASHER, Flat (NA) (89372)	4		
-46	AN515-8R18	SCREW	2		
-47	EPG-212	SWITCH, Plunger (AOE) (80411) (supersedes EPG-211 (AOE) (80411) for future procurement)	1		
-48	AN320-3	NUT	1		
-49	2W18-10	WASHER, Flat (NA) (89372)	2		
-50	AN23-11	BOLT	1		
-51	209-487110	CABLE ASSEMBLY, External stores emergency jettison system forward	1	BR	
-52	209-487127	CABLE ASSEMBLY, External stores emergency jettison system forward	1	BS	
	RA2500-3	. FORK (ACA) (01976)	1		
	AN664C3	. TERMINAL	2		
-53	194-52034-3	BRACKET ASSEMBLY, Manual emergency flight control change over fuselage station 85 pulley	1		
	ATTACHING PARTS				
	AN3-5A	BOLT	3		
	2W18-10M	WASHER, Flat (NA) (89372)	6		
	AN365-1032	NUT	3		
	---*---				
-54	AN219-2	PULLEY	1		
-55	AN4-14A	BOLT	1		
	2W18-416	WASHER, Flat (NA) (89372)	2		
	AN365-428	NUT	1		
-56	AN210-1B	PULLEY	1		
-57	AN23-15A	BOLT	1		
	2W18-10M	WASHER, Flat (NA) (89372)	2		
	AN364-1032	NUT	1		
-58	209-487105	BRACKET ASSEMBLY, External stores emergency jettison system station 91.938	1		
-59	AN210-1B	PULLEY	1		
	ATTACHING PARTS				
	AN3H6A	BOLT	1		
	2W18-10	WASHER, Flat (NA) (89372)	1		
	---*---				

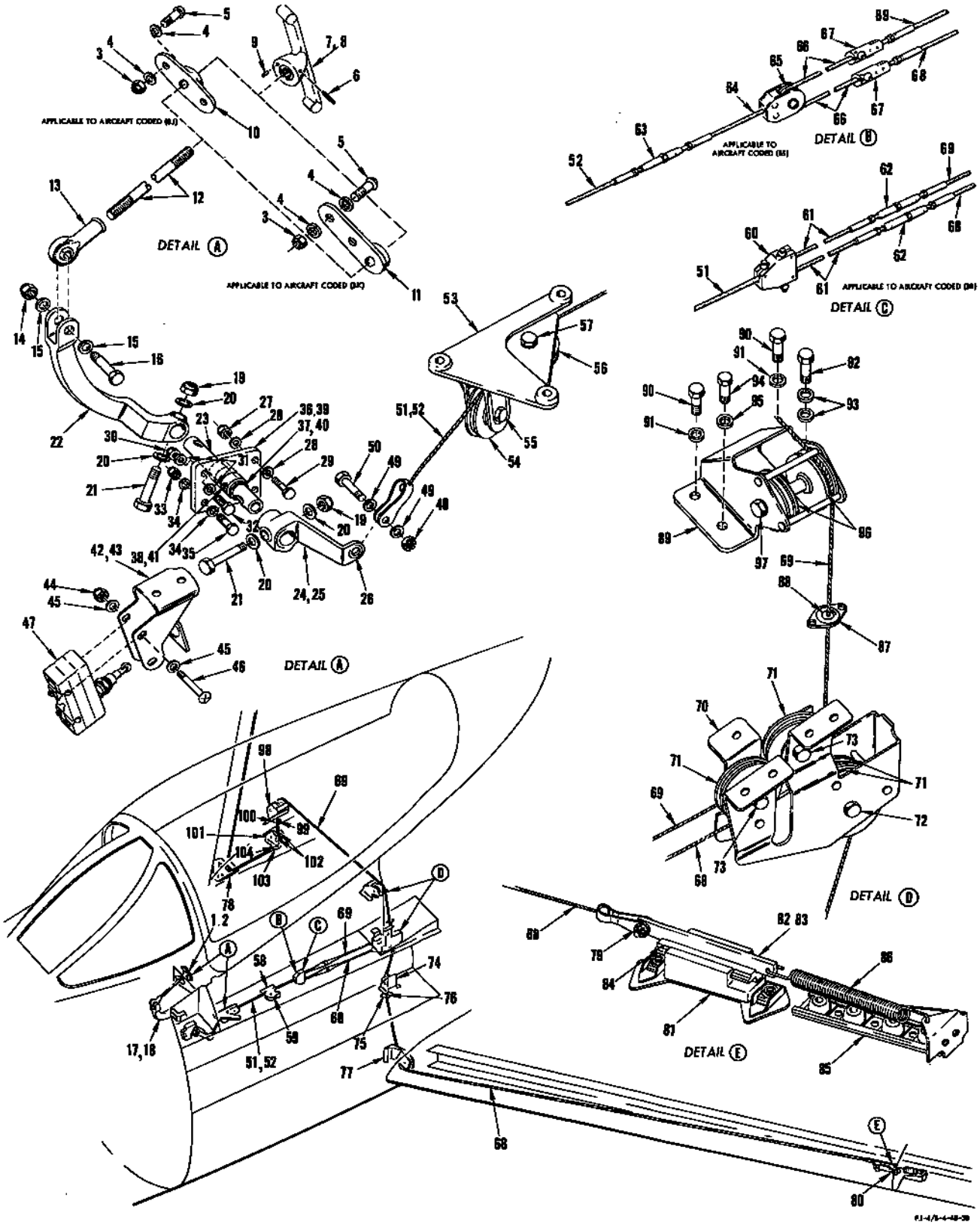

FIGURE 196 - SPECIAL STORES AND DROP TANK RELEASE CONTROL

SPECIAL STORES AND DROP TANK RELEASE CONTROL

FIGURE & INDEX NO.	PART NUMBER	1 2 3 4 5 6 7 NOMENCLATURE	UNITS PER ASSY.	USABLE ON CODE	S/C NO.
196-60	181-520161	CONNECTOR, External stores emergency jettison system cable assembly forward	1	BR	
-61	209-48776	CABLE ASSEMBLY, Special stores emergency release lower LH	2	BR	
	AN664C3	. TERMINAL	1	BR	
	AN669S3RH	. TERMINAL	1	BR	
-62	AN155-16S	BARREL	2	BR	
-63	AN155-16S	BARREL	1	BS	
-64	209-487128	CABLE ASSEMBLY, External stores emergency jettison	1	BS	
	AN669S3LH	TERMINAL	1	BS	
	AN664C3	. TERMINAL	1	BS	
	209-487129	. DIVIDER, Cable assembly external stores emergency jettison system intermediate	1	BS	
-65	AN210-1B	PULLEY	1	BS	
	ATTACHING PARTS				
	AN23-11	BOLT (install bolthead outboard)	1	BS	
	2W18-10M	WASHER, Flat (NA) (89372)	2	BS	
	AN310-3	NUT	1	BS	
	---*---				
-66	209-487126	CABLE ASSEMBLY, External stores emergency jettison system aft	1	BS	
	AN664C2	. TERMINAL	2	BS	
-67	209-487136	FITTING, External stores emergency cable end	2	BS	
-68	209-48767	CABLE ASSEMBLY, Special stores emergency release system	1		
	RA2500-3	. FORK (ACA) (01976)	1		
	AN664C3	. TERMINAL	1		
	AN669L3LH	. TERMINAL	1		
-69	209-48780	CABLE ASSEMBLY, Special stores emergency release system RH	1		
	RA2500-3	. FORK (ACA) (01976)	1		
	AN664C3	. TERMINAL	1		
	AN669S3LH	. TERMINAL	1		
-70	209-48711	BRACKET ASSEMBLY, Drop tank and dump valve control fuselage station 127 pulley	1		
-71	AN219-2	. PULLEY	4		
-72	AN4-14A	. BOLT	1		
	2W18-416	. WASHER, Flat (NA) (89372)	2		
	AN365-428	. NUT	1		
-73	AN4-11A	. BOLT	1		
	2W18-416	. WASHER, Flat (NA) (89372)	2		
	AN365-428	. NUT	1		
-74	209-48713	BRACKET ASSEMBLY, Wing fuel dump emergency release fuselage station 121.75 (LH only)	1		
	AN219-2	. PULLEY	2		
	ATTACHING PARTS				
	AN4-13A	. BOLT	1		
	2W18-416M	. WASHER, Flat (NA) (89372)	2		
	AN365-428	. NUT	1		
	---*---				
-75	209-48727	FAIRLEAD, Fume seal	1		
-76	209-48726	SEAL, Fume	1		
-77	209-48717-1	BRACKET ASSEMBLY, Wing fuel dump valve fuselage station 116.125 LH	1		
-78	209-48717-2	BRACKET ASSEMBLY, Wing fuel dump valve fuselage station 116.125 RH	1		
	AN219-2	. PULLEY	2		
	ATTACHING PARTS				
	AN4-15A	. BOLT	1		
	2W18-416	. WASHER, Flat (NA) (89372)	2		
	AN365-428	. NUT	1		
	---*---				
-79	AN23-9	BOLT	1		
	2W18-10M	WASHER, Flat (NA) (89372)	2		
	AN320-3	NUT	1		
-80	209-48773-1	SLIDER ASSEMBLY, Special stores emergency release system LH	1		
	209-48773-2	SLIDER ASSEMBLY, Special stores emergency release system RH	1		
-81	209-48768-1	. SUPPORT ASSEMBLY, Slider special stores emergency release system LH	1		
	209-48768-2	. SUPPORT ASSEMBLY, Slider special stores emergency release system RH	1		
-82	209-48769-11	. SLIDER, Special stores emergency release system	1	BR	
-83	209-48769-1	. SLIDER, Special stores emergency release system	1	BS	
-84	52-028-125-1000	. ROLLPIN (EN) (72962)	1		
-85	209-48770-1	SUPPORT ASSEMBLY, Special stores emergency release system spring LH	1		
	209-48770-2	SUPPORT ASSEMBLY, Special stores emergency release system spring RH	1		
	209-48781-1	. NUT PLATE ASSEMBLY, Special stores emergency release system support LH	1		
	209-48781-11	. NUT PLATE ASSEMBLY, Special stores emergency release system support RH	1		
-86	209-48762	SPRING, Tension	1		
-87	209-52045	PLATE, Fume seal	2		
-88	209-52049	SEAL, Control cable	2		
-89	209-48712-11	BRACKET ASSEMBLY, Fuel dump valve control fuselage station 123.844 pulley	1		
	ATTACHING PARTS				
-90	AN3-4A	BOLT	2		
-91	2W18-10L	WASHER, Flat (NA) (89372)	2		
-92	AN3-5A	BOLT	1		
-93	2W18-10	WASHER, Flat (NA) (89372)	2		
-94	AN3-5A	BOLT	1		
-95	2W18-10	WASHER, Flat (NA) (89372)	1		
	---*---				

SPECIAL STORES AND DROP TANK RELEASE CONTROL

FIGURE & INDEX NO.	PART NUMBER	1 2 3 4 5 6 7 NOMENCLATURE	UNITS PER ASSY.	USABLE ON CODE	S/C NO.
196-96	AN219-2	. PULLEY	2		
-97	AN4-25A	. BOLT	1		
	2W18-416	. WASHER, Flat (NA) (89372)	2		
	NAS43-4-68	. SPACER	1		
	AN365-428	. NUT	1		
-98	209-487116	BRACKET ASSEMBLY, Wing fuel dump valve and special stores fuselage station 123.844 (supersedes 209-48710 for future procurement)	1		
99	209-52049	SEAL, Control cable	1		
-100	209-52045	PLATE, Fume seal	1		
-101	209-48714	BRACKET ASSEMBLY, Wing fuel dump emergency release fuselage station 123 RH	1		
-102	AN219-2	. PULLEY	2		
	ATTACHING PARTS				
	AN4-21A	. BOLT	1		
	2W18-416	. WASHER, Flat (NA) (89372)	2		
	AN365-428	. NUT	1		
	---*---				
-103	209-52046	FAIRLEAD, Fume seal	1		
-104	209-52049	SEAL, Control cable	1		

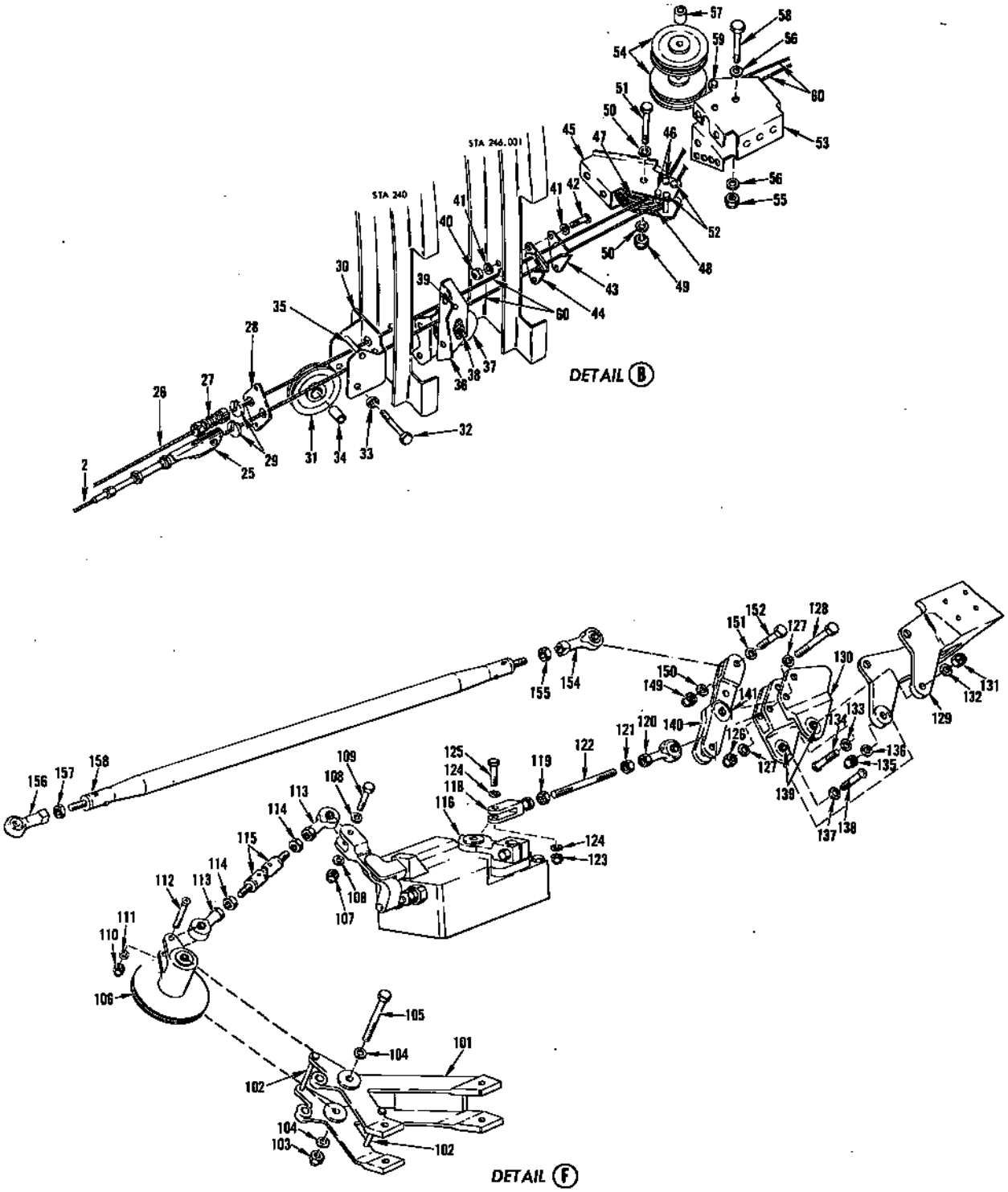

FIGURE 198 - SPEED BRAKE HYDRAULIC DUMP CONTROL - APPLICABLE TO AIRCRAFT CODED (FR) (Sheet 2)

SPEED BRAKE HYDRAULIC DUMP CONTROL - APPLICABLE TO AIRCRAFT CODED (FR)

FIGURE & INDEX NO.	PART NUMBER	1 2 3 4 5 6 7 NOMENCLATURE	UNITS PER ASSY.	USABLE ON CODE	S/C NO.
198-1	181-58377-11	KNOB ASSEMBLY, Hydraulic speed brake dump control actuating (see figure 199 for breakdown)	1	FR	
-2	209-52712	CABLE ASSEMBLY, Hydraulic speed brake dump system forward reset	1	FR	
	RA2500-2	. FORK (ACA)	1	FR	
	AN664C2	. TERMINAL	1	FR	
	AN669S2LH	. TERMINAL	1	FR	
-3	209-52716	CABLE ASSEMBLY, Hydraulic speed brake dump system forward dump	1	FR	
	RA2500-2	. FORK (ACA)	1	FR	
	AN664C2	. TERMINAL	1	FR	
	AN669S2RH	. TERMINAL	1	FR	
-4	181-58379	BRACKET ASSEMBLY, Hydraulic speed brake dump fuselage station 128 upper pulley	1	FR	
-5	AN210-2B	. PULLEY	2	FR	
-6	AN3-11A	. BOLT	2	FR	
	2W18-10	. WASHER, Flat (NA)	4	FR	
	AN365-1032	. NUT	2	FR	
-7	181-58380	BRACKET ASSEMBLY, Hydraulic speed brake dump fuselage station 131 pulley	1	FR	
-8	AN210-2B	. PULLEY	2	FR	
-9	AN3-13A	. BOLT	1	FR	
	AN960D10L	. WASHER	2	FR	
	4B21S3-9	. BUSHING, Spacer (NA)	1	FR	
	AN365-1032	. NUT	1	FR	
-10	NAS427K18	PIN	2	FR	
-11	209-52706	BRACKET ASSEMBLY, Speed brake dump cable fuselage station 137.219	1	FR	
	NAS42-3-24	. SPACER	1	FR	
-12	AN219-2	. PULLEY	1	FR	
-13	AN4-10A	. BOLT	1	FR	
	2W18-416M	. WASHER, Flat (NA)	2	FR	
	AN365-428	. NUT	1	FR	
-14	209-52707	BRACKET ASSEMBLY, Speed brake dump cable fuselage station 144.359	1	FR	
-15	AN219-2	. PULLEY	1	FR	
-16	AN4-10A	. BOLT	1	FR	
	2W18-416M	. WASHER, Flat (NA)	2	FR	
	AN365-428	. NUT	1	FR	
-17	NAS427K9	PIN	1	FR	
-18	209-52705	BRACKET ASSEMBLY, Hydraulic speed brake dump system	1	FR	
-19	AN210-1B	. PULLEY	1	FR	
-20	AN3-7	. BOLT	1	FR	
	2W18-10	. WASHER, Flat (NA)	1	FR	
	2W18-10M	. WASHER, Flat (NA)	1	FR	
	AN365-1032	. NUT	1	FR	
	NAS427K9	PIN	2	FR	
-21	209-52049	SEAL, Control cable	2	FR	
-22	209-52045	PLATE, Fume seal	1	FR	
-23	209-52046	FAIRLEAD, Fume seal	1	FR	
-24	AN155-8S	BARREL	2	FR	
-25	206-001A	QUICK DISCONNECT (Bohanan Mfg Co)	1	FR	
-26	209-52713	CABLE ASSEMBLY, Hydraulic speed brake dump system	1	FR	
	AN669S2LH	. TERMINAL	1	FR	
	AN663C2	. TERMINAL	1	FR	
-27	RA2258-2	QUICK DISCONNECT (ACA)	1	FR	
-28	209-52737	FAIRLEAD, Speed brake dump system control fuselage 236.5 cable	1	FR	
-29	209-52717	STOP, Speed brake dump control fuselage station 236.5 cable	1	FR	
-30	209-52728	BRACKET ASSEMBLY, Speed brake dump control fuselage station 240 forward pulley	1	FR	
-31	AN219-4	. PULLEY	1	FR	
-32	AN4-16A	. BOLT	1	FR	
-33	2W18-416	. WASHER, Flat (NA)	1	FR	
-34	4B19S4-022	. BUSHING, Press fit plain (NA)	1	FR	
-35	NAS427K21	PIN	1	FR	
-36	209-52729	BRACKET ASSEMBLY, Speed brake dump control fuselage station 240 aft pulley	1	FR	
	NAS42DD4-28	. SPACER	1	FR	
-37	AN219-2	. PULLEY	1	FR	
-38	AN4-10A	. BOLT	1	FR	
	2W18-416	. WASHER, Flat (NA)	1	FR	
-39	NAS427T10	PIN	1	FR	
-40	AN365-1032	NUT	2	FR	
-41	2W18-10	WASHER, Flat (NA)	4	FR	
-42	NAS221-12	SCREW	2	FR	
-43	209-52735-3	SEAL, Speed brake dump system control fuselage station 246 cable	1	FR	
-44	209-52735-5	SEAL, Speed brake dump system control fuselage station 246 cable	1	FR	
-45	209-52734	BRACKET ASSEMBLY, Speed brake dump control fuselage station 246 pulley	1	FR	
-46	209-52734-5	BRACKET SUBASSEMBLY, Speed brake dump control fuselage station 246 pulley (make from NAS42DD4-24)	2	FR	
-47	AN219A2	PULLEY	1	FR	
-48	AN219A4	PULLEY	1	FR	
-49	AN365-428	NUT	1	FR	
-50	2W18-416	WASHER, Flat (NA)	2	FR	
-51	AN4-14A	BOLT	1	FR	
-52	NAS427K18	PIN	2	FR	
-53	209-52733	BRACKET ASSEMBLY, Speed brake dump valve control fuselage station 251.5 pulley	1	FR	
-54	AN219A2	PULLEY	2	FR	

SPEED BRAKE HYDRAULIC DUMP CONTROL - APPLICABLE TO AIRCRAFT CODED (FR)

FIGURE & INDEX NO.	PART NUMBER	1 2 3 4 5 6 7 NOMENCLATURE	UNITS PER ASSY.	USABLE ON CODE	S/C NO.
198-55	AN365-428	NUT	1	FR	
-56	2W18-416	WASHER, Flat (NA)	2	FR	
-57	NAS43DD4-22	SPACER	1	FR	
-58	AN4-17A	BOLT	1	FR	
-59	NAS427K18	PIN	2	FR	
-60	209-52736	CABLE ASSEMBLY, Speed brake dump control aft	1	FR	
	RA2487-2	. BALL TERMINAL (ACA)	1	FR	
	AN663C2	. TERMINAL	1	FR	
	AN664C2	. TERMINAL	1	FR	
	181-520130	. LOCK, Speed brake dump control aft cable to sector	1	FR	
-61	209-52731	BRACKET ASSEMBLY, Speed brake dump control fuselage station 286.5 pulley	1	FR	
-62	AN219A2	. PULLEY	2	FR	
-63	AN4-14A	. BOLT	1	FR	
	2W18-416	. WASHER, Flat (NA)	2	FR	
	AN365-428	. NUT	1	FR	
	NAS427K17	PIN	2	FR	
-64	209-52753	SUPPORT ASSEMBLY, Speed brake dump aft fuselage station 286.5	1	FR	
-65	AN219A2	. PULLEY	1	FR	
-66	AN365-428	. NUT	1	FR	
-67	2W18-416	. WASHER, Flat (NA)	2	FR	
-68	4B21S4-014	. BUSHING, Spacer (NA)	1	FR	
-69	AN4-14A	. BOLT	1	FR	
-70	NAS427K16	PIN	2	FR	
-71	NAS427K30	PIN	2	FR	
-72	NAS427K36	PIN	1	FR	
-73	209-52754	SECTOR ASSEMBLY, Speed brake aft fuselage	1	FR	
	ATTACHING PARTS				
-74	AN3-24A	BOLT	1	FR	
-75	2W18-10	WASHER, Flat (NA)	1	FR	
	---*---				
-76	AN201KP3A	. BEARING	2	FR	
	4S7-1-1.593	. SPACER, Flanged dual bearing (NA)	1	FR	
-77	AN364-1032	NUT	1	FR	
-78	2W18-10M	WASHER, Flat (NA)	1	FR	
-79	AN509-10R18	SCREW	1	FR	
-80	AN365-1032	NUT	1	FR	
-81	2W18-10M	WASHER, Flat (NA)	1	FR	
-82	AN509-10R18	SCREW	1	FR	
	209-52732	ROD ASSEMBLY, Speed brake dump control valve actuating	1	FR	
-83	REB3N2	. ROD END (FAF)	2	FR	
-84	AN316-5R	. NUT	2	FR	
-85	209-52738	. ROD, Speed brake dump control valve actuating	1	FR	
-86	209-58610	HYDRAULIC EQUIPMENT ASSEMBLY, Valve speed brake lock (see Hydraulic System)	1	FR	
-87	209-52759	CABLE ASSEMBLY, Speed brake aft fuselage forward	1	FR	
	RA2487-2	. BALL TERMINAL (ACA)	1	FR	
	PA-100-N2	. NUT (PHE)	2	FR	
	PA-100-C2	. CROSSPIECE (PHE)	2	FR	
	AN664C2	. TERMINAL	2	FR	
	181-520130	. LOCK, Speed brake dump cable aft fuselage forward	1	FR	
-88	209-52762	BRACKET ASSEMBLY, Speed brake fuselage station 286.5	1	FR	
-89	AN364-428	. NUT	2	FR	
-90	2W18-416M	. WASHER, Flat (NA)	4	FR	
-91	AN4-7A	. BOLT	2	FR	
-92	AN219-2	. PULLEY	2	FR	
-93	NAS427K9	PIN	4	FR	
-94	209-52760	CABLE ASSEMBLY, Speed brake aft fuselage aft	1	FR	
	RA2487-2	. BALL TERMINAL (ACA)	1	FR	
	PA-100-S2	. SLEEVE (PHE)	2	FR	
	AN664C2	. TERMINAL	2	FR	
	181-520130	. LOCK, Speed brake dump cable aft fuselage aft	1	FR	
-95	209-52755	BRACKET, Speed brake aft fuselage station 298 pulley	2	FR	
	ATTACHING PARTS				
	AN3-5A	BOLT	4	FR	
	2W18-10	WASHER, Flat (NA)	8	FR	
	AN365-1032	NUT	4	FR	
	---*---				
-96	AN365-428	NUT	2	FR	
-97	2W18-416	WASHER, Flat (NA)	4	FR	
-98	AN4-14A	BOLT	2	FR	
-99	AN219-2	PULLEY	2	FR	
-100	NAS427K15	PIN	2	FR	
-101	209-52756	BRACKET, Speed brake control aft fuselage	1	FR	
	ATTACHING PARTS				
	AN4-6A	BOLT	4	FR	
	2W18-416M	WASHER, Flat (NA)	4	FR	
	AN365-428	NUT	4	FR	
	---*---				
-102	NAS427K36	PIN	2	FR	
-103	AN365-10	NUT	1	FR	
-104	2W18-10M	WASHER, Flat (NA)	2	FR	
-105	AN3-25A	BOLT	1	FR	
-106	209-52757	SECTOR, Speed brake control aft fuselage	1	FR	

SPEED BRAKE HYDRAULIC DUMP CONTROL - APPLICABLE TO AIRCRAFT CODED (FR)

FIGURE & INDEX NO.	PART NUMBER	1 2 3 4 5 6 7 NOMENCLATURE	UNITS PER ASSY.	USABLE ON CODE	S/C NO.
198	AN201KP3A	. BEARING	2	FR	
	4S7-1-1.187	. SPACER, Flanged dual bearing (NA)	1	FR	
	209-52743-51	ROD ASSEMBLY, Speed brake aft fuselage	1	FR	
		ATTACHING PARTS			
-107	AN364-428	NUT	1	FR	
-108	2W18-416M	WASHER, Flat (NA)	2	FR	
-109	AN4-13A	BOLT	1	FR	
-110	AN365-428	NUT	1	FR	
-111	2W18-416M	WASHER, Flat (NA)	1	FR	
-112	7S15-416-18	SCREW, 100° flush head (NA)	1	FR	
		---*---			
-113	RE4F5	. ROD END (FAF)	2	FR	
-114	AN310-5	. NUT	2	FR	
-115	209-52743-21	. ROD SUBASSEMBLY, Speed brake aft fuselage	1	FR	
-116	209-587157	VALVE ASSEMBLY, Hydraulic flight control aft speed brake servo (see Hydraulic System)	1	FR	
-117	209-52750	ROD ASSEMBLY, Speed brake aft fuselage valve operating	1	FR	
-118	165-52016-3	. CLEVIS, Surface control operating female	1	FR	
-119	1N7-5LA	. NUT, Check (NA)	1	FR	
-120	RE4F5-2	. ROD END (FAF)	1	FR	
-121	1N7-5A	. NUT, Check (NA)	1	FR	
-122	209-52751	. ROD, Speed brake aft fuselage	1	FR	
-123	AN365-428	NUT	1	FR	
-124	2W18-416M	WASHER, Flat (NA)	2	FR	
-125	AN174-12A	BOLT	1	FR	
-126	AN365-428	NUT	2	FR	
-127	2W18-416M	WASHER, Flat (NA)	4	FR	
-128	AN174-25A	BOLT	2	FR	
-129	209-52749	SUPPORT, Speed brake aft fuselage idler	1	FR	
		ATTACHING PARTS			
	AN4-10A	BOLT	4	FR	
	2W18-416M	WASHER, Flat (NA)	4	FR	
	2W18-416	WASHER, Flat (NA)	4	FR	
	AN365-428	NUT	4	FR	
		---*---			
-130	209-52748	IDLER ASSEMBLY, Speed brake aft fuselage	1	FR	
		ATTACHING PARTS			
-131	AN310-4	NUT	1	FR	
-132	2W18-416	WASHER, Flat (NA)	1	FR	
-133	2W18-416M	WASHER, Flat (NA)	1	FR	
-134	AN174-10	BOLT	1	FR	
-135	AN365-428	NUT	1	FR	
-136	2W18-416	WASHER, Flat (NA)	1	FR	
-137	2W18-416M	WASHER, Flat (NA)	1	FR	
-138	NAS222-19	SCREW	1	FR	
		---*---			
-139	AN201KP4A	. BEARING	2	FR	
-140	209-52747	ARM ASSEMBLY, Speed brake aft fuselage rocker	1	FR	
-141	AN301KP4A	. BEARING	2	FR	
	4S6-4-0.395	. SPACER, Plain dual bearing (NA)	1	FR	
-142	209-52765	BUNGEE ASSEMBLY, Speed brake aft fuselage (see figure 202 for breakdown)	1	FR	
		ATTACHING PARTS			
-143	AN174-13A	BOLT	1	FR	
	2W18-416M	WASHER, Flat (NA)	2	FR	
	AN365-428	NUT	1	FR	
-144	AN174-12A	BOLT	1	FR	
	2W18-416M	WASHER, Flat (NA)	2	FR	
	AN365-428	NUT	1	FR	
		---*---			
-145	209-39070	HORN, Aft fuselage speed brake outer hinge (see Aft Fus - Speed Brake)	1	FR	
-146	209-52763	BOOT ASSEMBLY, Speed brake aft fuselage station 338.75	1	FR	
		ATTACHING PARTS			
-147	AN515-8R7	SCREW	1	FR	
	2W18-8	WASHER, Flat (NA)	2	FR	
	AN365-832	NUT	1	FR	
	AN742F5	CLAMP	1	FR	
-148	NAS220-11	SCREW	3	FR	
	2W18-8	WASHER, Flat (NA)	6	FR	
	AN365-832	NUT	3	FR	
	209-527104	SPACER, Speed brake aft fuselage station 338.75 boot	1	FR	
		---*---			
	209-52763-3	. BOOT, Speed brake aft fuselage station 338.75 boot assembly	1	FR	
	209-52763-5	. PLATE, Speed brake aft fuselage station 338.75 boot assembly	1	FR	
-149	AN365-428	NUT	1	FR	
-150	2W18-416	WASHER, Flat (NA)	1	FR	
-151	2W18-416M	WASHER, Flat (NA)	1	FR	
-152	AN174-25A	BOLT	1	FR	
-153	209-52744	PUSH ROD ASSEMBLY, Speed brake aft fuselage	1	FR	
-154	209-52745	. ROD END ASSEMBLY, Speed brake aft fuselage RH	1	FR	
-155	1N7-5A	. NUT, Check (NA)	1	FR	
-156	209-52746	. ROD END ASSEMBLY, Speed brake aft fuselage LH	1	FR	
-157	1N7-5LA	. NUT, Check (NA)	1	FR	
-158	209-52744-11	. PUSH ROD SUBASSEMBLY, Speed brake aft fuselage	1	FR	

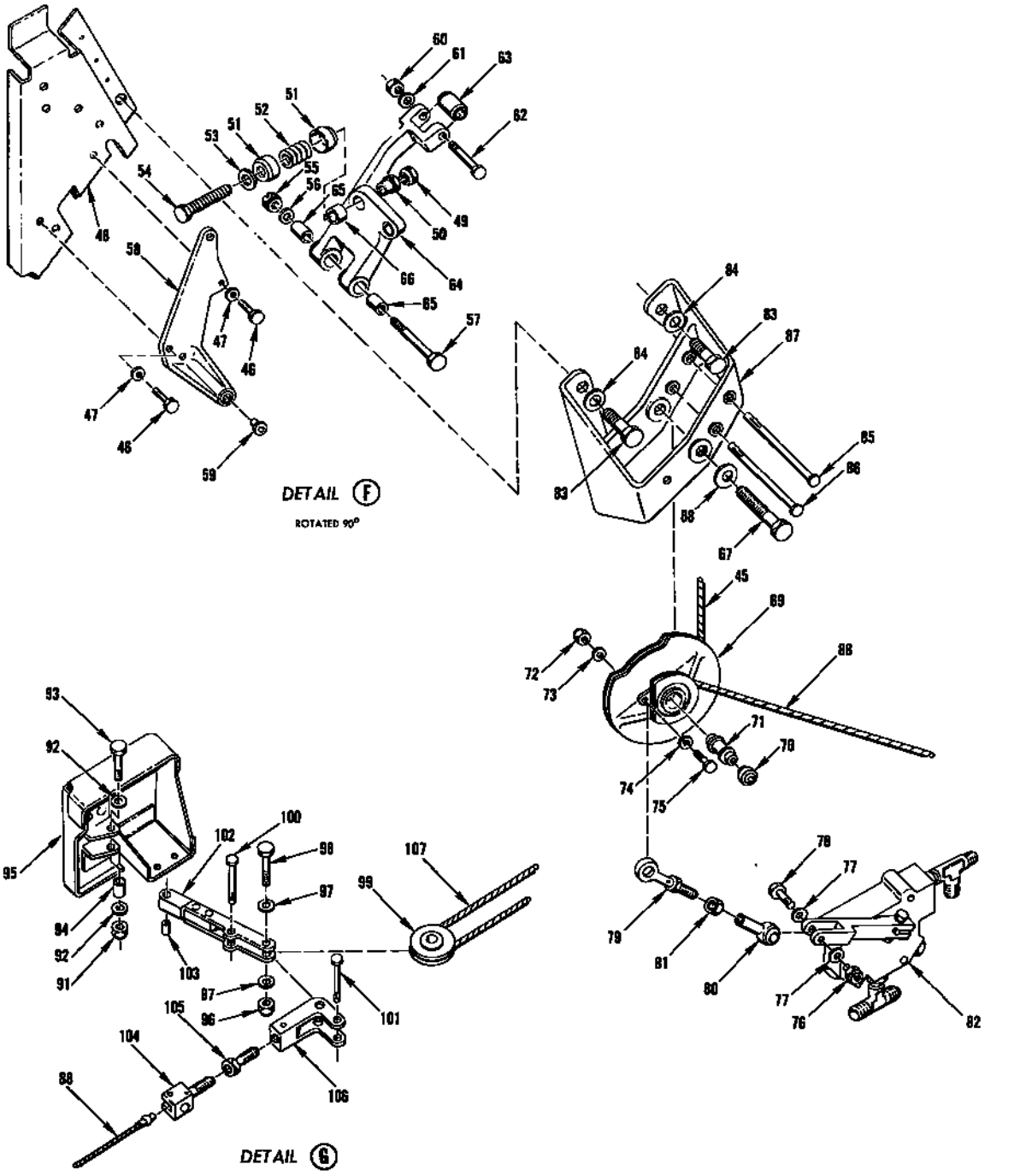

FIGURE 200 - LANDING GEAR EMERGENCY RELEASE CONTROL (Sheet 2)

LANDING GEAR EMERGENCY RELEASE CONTROL

FIGURE & INDEX NO.	PART NUMBER	1 2 3 4 5 6 7 NOMENCLATURE	UNITS PER ASSY.	USABLE ON CODE
200-1	120-33548-10	HANDLE ASSEMBLY, Main landing gear emergency down control	1	
-2	AN565A4-5	. SCREW	1	
-3	194-33712	RECEPTACLE, Landing gear emergency release handle	1	
-4	151-33619	GUIDE, Cable	1	
-5	194-33720	CABLE ASSEMBLY, Landing gear emergency release system nose gear door release aft	1	
	AN664C3	. TERMINAL	1	
	RA2487-3	. BALL, Terminal (ACA) (01976)	1	
	194-33719-2	. FITTING, Cable	1	
-6	194-33707	BRACKET ASSEMBLY, Landing gear emergency release system fuselage station 63.5	1	
	AN219-2	. PULLEY	1	
	ATTACHING PARTS			
	AN4-10A	. BOLT	1	
	2W18-416	. WASHER, Flat (NA) (89372)	1	
	---*---			
	NAS427K9	PIN	2	
-7	194-33755	RETAINER, Control cable pressure seal	1	
-8	3S11-3	SEAL, Control cable pressure (NA) (89372)	1	
-9	194-33754	PLATE, Control cable seal base	1	
	ATTACHING PARTS			
-10	NAS221-18	SCREW	2	
-11	2W18-10M	WASHER, Flat (NA) (89372)	4	
-12	AN365-1032	NUT	2	
	---*---			
-13	194-33708	BRACKET ASSEMBLY, Landing gear emergency release system fuselage station 70.781 pulley	1	
	NAS42DD3-28	. SPACER	1	
	AN219-2	PULLEY	1	
	ATTACHING PARTS			
	AN4-10A	BOLT	1	
	2W18-416	WASHER, Flat (NA) (89372)	2	
	AN365-428	NUT	1	
	---*---			
-14	194-33709	BRACKET ASSEMBLY, Landing gear emergency release system fuselage station 69.656 upper pulley	1	
	AN219-2	PULLEY	1	
	ATTACHING PARTS			
	AN4-11A	BOLT	1	
	2W18-416	WASHER, Flat (NA) (89372)	2	
	AN365-428	NUT	1	
	---*---			
-15	209-52045	PLATE, Fume seal	3	
-16	209-52049	SEAL, Control cable	3	
-17	194-33714	BRACKET ASSEMBLY, Landing gear emergency release system fuselage station 69.656 lower outboard	1	
	AN219-4	PULLEY	1	
	ATTACHING PARTS			
	AN4-11A	BOLT	1	
	2W18-416	WASHER, Flat (NA) (89372)	2	
	AN365-428	NUT	1	
	---*---			
	NAS427K9	PIN	1	
-18	194-33730	BRACKET ASSEMBLY, Landing gear emergency release system fuselage station 69.656 pulley	1	
	AN219-2	. PULLEY	1	
	ATTACHING PARTS			
	AN4-11A	. BOLT	1	
	AN960D416	. WASHER	2	
	AN365-428	. NUT	1	
	---*---			
	NAS427K9	PIN	1	
-19	194-33745	BRACKET ASSEMBLY, Landing gear emergency release system fuselage station 71.75 forward pulley	1	
	AN219-2	. PULLEY	2	
	ATTACHING PARTS			
	AN4-11A	. BOLT	2	
	2W18-416	. WASHER, Flat (NA) (89372)	4	
	AN365-428	. NUT	2	
	---*---			
	AN393-19	PIN	3	
-20	194-33747	BRACKET ASSEMBLY, Nose landing gear emergency release system fuselage station 71.75 aft pulley (see figure 200 for breakdown)	1	
-21	AN155-46S	BARREL	1	
-22	194-33725	CABLE ASSEMBLY, Landing gear emergency release system nose gear door release forward	1	Y
-23	194-33756	CABLE ASSEMBLY, Landing gear emergency release system nose gear door release forward	1	Z
	RA2487-3	. BALL, Terminal (ACA) (01976)	1	
	AN664C3	. TERMINAL	1	
	194-33719-1	. FITTING, Cable	1	
-24	194-33732	BRACKET ASSEMBLY, Landing gear emergency release system station 60.719	1	Y
-25	194-33717	BRACKET ASSEMBLY, Landing gear emergency release system station 60.719	1	Z
	NAS427K10	. PIN	2	
	AN219-2	PULLEY	1	

LANDING GEAR EMERGENCY RELEASE CONTROL

FIGURE & INDEX NO.	PART NUMBER	1 2 3 4 5 6 7 NOMENCLATURE	UNITS PER ASSY.	USABLE ON CODE
200		ATTACHING PARTS		
	AN4-11A	BOLT	1	
	2W18-416	WASHER, Flat (NA) (89372)	2	
	AN365-428	NUT	1	
		---*---		
-26	181-34537	SECTOR, Nose landing gear wheel door lock emergency release (see Forward Fuselage)	1	
-27	194-34566	SPRING, Tension	1	
-28	209-337122	CABLE ASSEMBLY, Landing gear emergency control main gear release forward	1	
		ATTACHING PARTS		
-29	AN23-11	BOLT	1	Y
	AN310-3	NUT (to be finger tight only)	1	Y
	2W18-10M	WASHER, Flat (NA) (89372)	2	Y
-30	AN393-15	PIN	1	Z
	2W18-10M	WASHER, Flat (NA) (89372)	1	Z
		---*---		
	RA2500-3	. FORK (ACA) (01976)	1	
	AN664C3	. TERMINAL	1	
	AN669S3RH	. TERMINAL	1	
-31	194-33728	BRACKET ASSEMBLY, Landing gear emergency release system fuselage station 51.625 pulley	1	
	AN219-2	. PULLEY	1	
		ATTACHING PARTS		
	AN4-10A	. BOLT	1	
	2W18-416	. WASHER, Flat (NA) (89372)	1	
		---*---		
	NAS427K9	PIN	2	
-32	194-33729	BRACKET ASSEMBLY, Landing gear emergency release system fuselage station 51.156 pulley	1	
	AN219-4	. PULLEY	1	
		ATTACHING PARTS		
	AN4-10A	. BOLT	1	
	2W18-416	. WASHER, Flat (NA) (89372)	2	
	AN365-428	. NUT	1	
		---*---		
	NAS427K9	PIN	1	
-33	194-34535	SPRING, Tension	1	
-34	181-34516-5	HOOK ASSEMBLY, Nose landing gear uplock (see Forward Fuselage)	1	
-35	181-34530	SHAFT ASSEMBLY, Nose landing gear emergency release (see Forward Fuselage)	1	
-36	194-33744	BRACKET ASSEMBLY, Landing gear release system fuselage station 81.296 aft pulley	1	
	NAS427K9	. PIN	2	
	AN219-4	PULLEY	1	
		ATTACHING PARTS		
	AN4-11A	BOLT	1	
	2W18-416	WASHER, Flat (NA) (89372)	2	
	AN365-428	NUT	1	
		---*---		
-37	209-337111	BRACKET ASSEMBLY, Landing gear emergency release station 83.296	1	
	209-337116	. BLOCK, Landing gear emergency release bracket guard	1	
		ATTACHING PARTS		
	AN4-11A	. BOLT	2	
	2W18-10M	. WASHER, Flat (NA) (89372)	4	
	AN365-1032	. NUT	2	
		---*---		
	AN219-2	PULLEY	1	
-38	209-337110	BRACKET ASSEMBLY, Landing gear emergency release fuselage station 83.296	1	
	AN210-1B	. PULLEY	2	
		ATTACHING PARTS		
	AN3-10A	. BOLT	2	
	2W18-10	. WASHER, Flat (NA) (89372)	6	
	AN365-1032	. NUT	2	
		---*---		
	NAS427K9	PIN	2	
-39	209-337105	BRACKET ASSEMBLY, Landing gear emergency release fuselage station 84.125	1	
	AN219-2	. PULLEY	1	
		ATTACHING PARTS		
	AN4-11A	. BOLT	1	
	2W18-416M	. WASHER, Flat (NA) (89372)	1	
		---*---		
	NAS427K9	PIN	1	
-40	209-52049	SEAL, Control cable	1	
-41	209-52045-3	PLATE, Fume seal	1	
-42	209-52334	BRACKET ASSEMBLY, Aileron control fuselage station 129 LH side (supersedes 209-52376-101 for future procurement)	1	
	AN210-1B	. PULLEY	1	
		ATTACHING PARTS		
	AN3-10A	. BOLT	1	
	2W18-10	. WASHER, Flat (NA) (89372)	4	
	AN365-1032	. NUT	1	
		---*---		
	NAS43-4-104	SPACER	1	
	NAS427K9	PIN	2	
	AN219-4	PULLEY	1	
		ATTACHING PARTS		
	AN4-26	BOLT	1	

LANDING GEAR EMERGENCY RELEASE CONTROL

FIGURE & INDEX NO.	PART NUMBER	1 2 3 4 5 6 7 NOMENCLATURE	UNITS PER ASSY.	USABLE ON CODE
200	2W18-416M	WASHER, Flat (NA) (89372)	1	
		---*---		
-43	209-337120	BRACKET ASSEMBLY, Landing gear emergency release station 182.062 pulley	1	
	AN210-1B	. PULLEY	1	
		ATTACHING PARTS		
	AN3-7A	. BOLT	1	
	2W18-10M	. WASHER, Flat (NA) (89372)	2	
	AN365-1032	. NUT	1	
		---*---		
	NAS427K9	PIN	2	
-44	AN155-16S	BARREL	1	
-45	209-33723	CABLE ASSEMBLY, Landing gear emergency release fuselage station 180.063 pulley	1	
	AN664C3	. TERMINAL	1	
	AN669S3LH	. TERMINAL	1	
-46	AN3-6A	BOLT	2	
-47	2W18-10	WASHER, Flat (NA) (89372)	2	
-48	209-58281	BRACKET ASSEMBLY, Hydraulic landing gear selector valve mounting	1	
	187-33619-11	FITTING ASSEMBLY, Main landing gear solenoid valve actuating mechanism	1	
-49	AN316-4R	. NUT	2	
-50	187-33609	. BUSHING, Main landing gear solenoid valve actuating arm	2	
-51	187-33617	. CUP, Main landing gear solenoid valve overload spring retainer	4	
-52	187-33623	. SPRING, Compression	2	
-53	2W1C20-24-83	. WASHER, Plain (NA) (89372)	2	
-54	5B21-428-31	. BOLT, Adjustable stop (NA) (89372)	2	
-55	AN310-5	. NUT	1	
-56	AN960D516	. WASHER	1	
-57	AN5-21	. BOLT	1	
-58	187-33605	. FITTING ASSEMBLY, Main landing gear solenoid valve actuating lever support	1	
-59	4B20B5-10	. . BUSHING, Press fit flanged (NA) (89372)	2	
-60	AN365-428	. NUT	1	
-61	AN960D416	. WASHER	1	
-62	AN4-15A	. BOLT	1	
-63	DW4	. BEARING (FAF) (21335)	1	
-64	187-33608-11	. ARM ASSEMBLY, Main landing gear solenoid valve actuating	1	
-65	4B19B5-012	. . BUSHING, Press fit plain (NA) (89372)	2	
-66	4B19B7-014	. . BUSHING, Press fit plain (NA) (89372)	2	
-67	AN4-30A	BOLT	1	
-68	2W18-416	WASHER, Flat (NA) (89372)	1	
-69	209-337107	SECTOR ASSEMBLY, Landing gear emergency release station 183	1	
-70	AN201KP4A	. BEARING	2	
-71	4S7-4-1.407	. SPACER, Flanged dual bearing	1	
-72	AN365-1032	NUT	1	
-73	2W18-10M	WASHER, Flat (NA) (89372)	1	
-74	2W18-10M	WASHER, Flat (NA) (89372)	1	
-75	AN3-13A	BOLT	1	
-76	AN365-1032	NUT	1	
-77	2W18-10	WASHER, Flat (NA) (89372)	1	
-78	AN3-10A	BOLT	1	
	209-33712	ROD ASSEMBLY, Landing gear emergency release by-pass valve	1	
-79	209-33712-11	. ROD SUBASSEMBLY, Landing gear emergency release by-pass valve rod assembly	1	
	REB3N	. . END (FAF) (21335)	1	
	AN316-4R	. . NUT	1	
-80	RE3FN	. END (FAF) (21335)	1	
-81	AN316-4R	. NUT	1	
-82	209-58612	HYDRAULIC EQUIPMENT ASSEMBLY, Valve landing gear manual by-pass (see Hydraulic System)	1	
-83	AN4-7A	BOLT	3	
-84	2W18-416	WASHER, Flat (NA) (89372)	3	
-85	NAS427K44	PIN	1	
-86	NAS427T10	PIN	1	
-87	209-337109	SUPPORT ASSEMBLY, Landing gear emergency release sector	1	
-88	209-337124	CABLE ASSEMBLY, Landing gear emergency control main gear release aft	1	
	AN664C3	. TERMINAL	2	
-89	209-33716	BRACKET ASSEMBLY, Landing gear emergency release fuselage station 183.875	1	
	AN219-2	. PULLEY	1	
		ATTACHING PARTS		
	AN4-11A	. BOLT	1	
	2W18-416	. WASHER, Flat (NA) (89372)	2	
	AN365-428	. NUT	1	
		---*---		
	209-33716-11	. BRACKET SUBASSEMBLY, Landing gear emergency release fuselage station 183.875	1	
	NAS42DD6-36	. . SPACER	2	
	NAS427K11	PIN	2	
-90	209-337108	BRACKET ASSEMBLY, Landing gear emergency release main wheel well station 184.656 (supersedes 209-337114 for future procurement)	1	
	AN219-2	. PULLEY	1	
		ATTACHING PARTS		
	AN4-11A	. BOLT	1	
	2W18-416M	. WASHER, Flat (NA) (89372)	1	
		---*---		
	NAS427K9	PIN	2	
-91	AN365-428	NUT	1	
-92	2W18-416	WASHER, Flat (NA) (89372)	2	

LANDING GEAR EMERGENCY RELEASE CONTROL

FIGURE & INDEX NO.	PART NUMBER	1 2 3 4 5 6 7 NOMENCLATURE	UNITS PER ASSY.	USABLE ON CODE
200-93	AN4-11A	BOLT	1	
-94	4B21S4-014	BUSHING, Spacer (NA) (89372)	1	
-95	209-58205	BRACKET ASSEMBLY, Hydraulic main landing gear fairing door manifold RH	1	
-96	AN365-428	NUT	1	
-97	2W18-416	WASHER, Flat (NA) (89372)	2	
-98	AN4-13A	BOLT	1	
-99	AN214-2	PULLEY	1	
-100	NAS427K9	PIN	1	
-101	NAS427K14	PIN	1	
-102	209-33717-11	BELLCRANK ASSEMBLY, Landing gear emergency release main wheel well station 192 (supersedes 209-33717 for future procurement)	1	
	209-33726	. LINK ASSEMBLY, Landing gear emergency release main wheel well station 192	1	
-103	4B1956-012	. . BUSHING, Press fit plain (NA)(89372)	1	
-104	209-52073	TERMINAL, Cable adjustment	1	
-105	209-52074	BARREL, Cable adjustment	1	
-106	209-33719	FITTING, Landing gear emergency release cable	1	
-107	209-337125	CABLE ASSEMBLY, Landing gear emergency control main gear release wheel well	1	
	RA2482-3	. EYE (ACA) (01976)	1	
	AN664C3	. TERMINAL	1	
	AN669S3RH	. TERMINAL	1	
-108	209-337115	BRACKET ASSEMBLY, Landing gear emergency release main landing gear wheel well aft	1	
	209-337115-21	. BRACKET SUBASSEMBLY, Landing gear emergency release main landing gear wheel well aft	1	
	AN219-2	. PULLEY	2	
	ATTACHING PARTS			
	AN4-11A	. BOLT	2	
	2W18-416	. WASHER, Flat (NA) (89372)	4	
	AN365-428	. NUT	2	
	---+---			
	NAS427K10	PIN	4	
-109	AN23-12	BOLT	1	
	2W18-10M	WASHER, Flat (NA) (89372) (under bolthead)	2	
	2W18-10	WASHER, Flat (NA) (89372)	2	
	AN320-3	NUT	2	
-110	AN155-16S	BARREL	1	
-111	209-52076	EYE, Aircraft turnbuckle for pin	1	
-112	AN23-20	BOLT	1	
	2W18-10	WASHER, Flat (NA) (89372) (under nut)	1	
	AN320-3	NUT	1	
-113	209-336119-1	BRACKET, Main landing gear uplock emergency cable pulley LH	1	
	209-336119-2	BRACKET, Main landing gear uplock emergency cable pulley RH	1	
-114	209-336126	CABLE ASSEMBLY, Main landing gear emergency release inboard	1	
	AN666-3RH	. TERMINAL	1	
	AN668-3	. TERMINAL	1	
-115	AN364-428	NUT	1	
-116	2W18-416M	WASHER, Flat (NA) (89372) (under nut)	1	
-117	AN24-16	BOLT	1	
-118	4B21M-S4-014	BUSHING, Spacer (NA) (89372)	1	
-119	209-333175	SUPPORT ASSEMBLY, Main landing gear strut door emergency release upper (see Inboard Wing)	1	
-120	AN320-3	NUT	1	
-121	2W18-10M	WASHER, Flat (NA) (89372) (under nut)	1	
-122	AN23-10	BOLT	1	
-123	AN320-3	NUT	1	
-124	2W18-10M	WASHER, Flat (NA) (89372) (under nut)	1	
-125	AN23-10	BOLT	1	
-126	209-336121-11	BELLCRANK ASSEMBLY, Main landing gear strut door emergency release LH	1	AW
	209-336121-12	BELLCRANK ASSEMBLY, Main landing gear strut door emergency release RH	1	AW
-127	209-336122-11	BELLCRANK ASSEMBLY, Main landing gear strut door emergency release LH	1	BY
	209-336122-12	BELLCRANK ASSEMBLY, Main landing gear strut door emergency release RH	1	BY
-128	4B19B6-013	. BUSHING, Plain press fit (NA)(89372)	1	
-129	209-336125	CABLE ASSEMBLY, Main landing gear emergency release outboard	1	
	AN669S3RH	. TERMINAL	1	
	AN668-3	. TERMINAL	1	
-130	AN320-3	NUT	1	
-131	2W18-10	WASHER, Flat (NA) (89372) (under nut)	1	
-132	AN23-17	BOLT	1	
-133	AN365-428	NUT	1	
-134	2W18-416	WASHER, Flat (NA) (89372)	1	
-135	AN4-35A	BOLT	1	
-136	2W1AL16-30-51	WASHER, Plain (NA) (89372)	2	
-137	209-33617-1	SPRING, Main landing gear emergency release return LH	1	
	209-33617-2	SPRING, Main landing gear emergency release return RH	1	
-138	209-33627	SLEEVE, Main landing gear emergency release spring retainer	1	
-139	4B21M-S4-014	BUSHING, Spacer (NA)(89372)	1	
-140	209-33610-1	BELLCRANK ASSEMBLY, Main landing gear uplock emergency LH	1	
	209-33610-2	BELLCRANK ASSEMBLY, Main landing gear uplock emergency RH	1	
-141	4B19B6-013	. BUSHING, Plain press-fit	1	
-142	209-33157	BUNGEE ASSEMBLY, Main landing gear uplock (see inboard wing - main landing gear)	1	

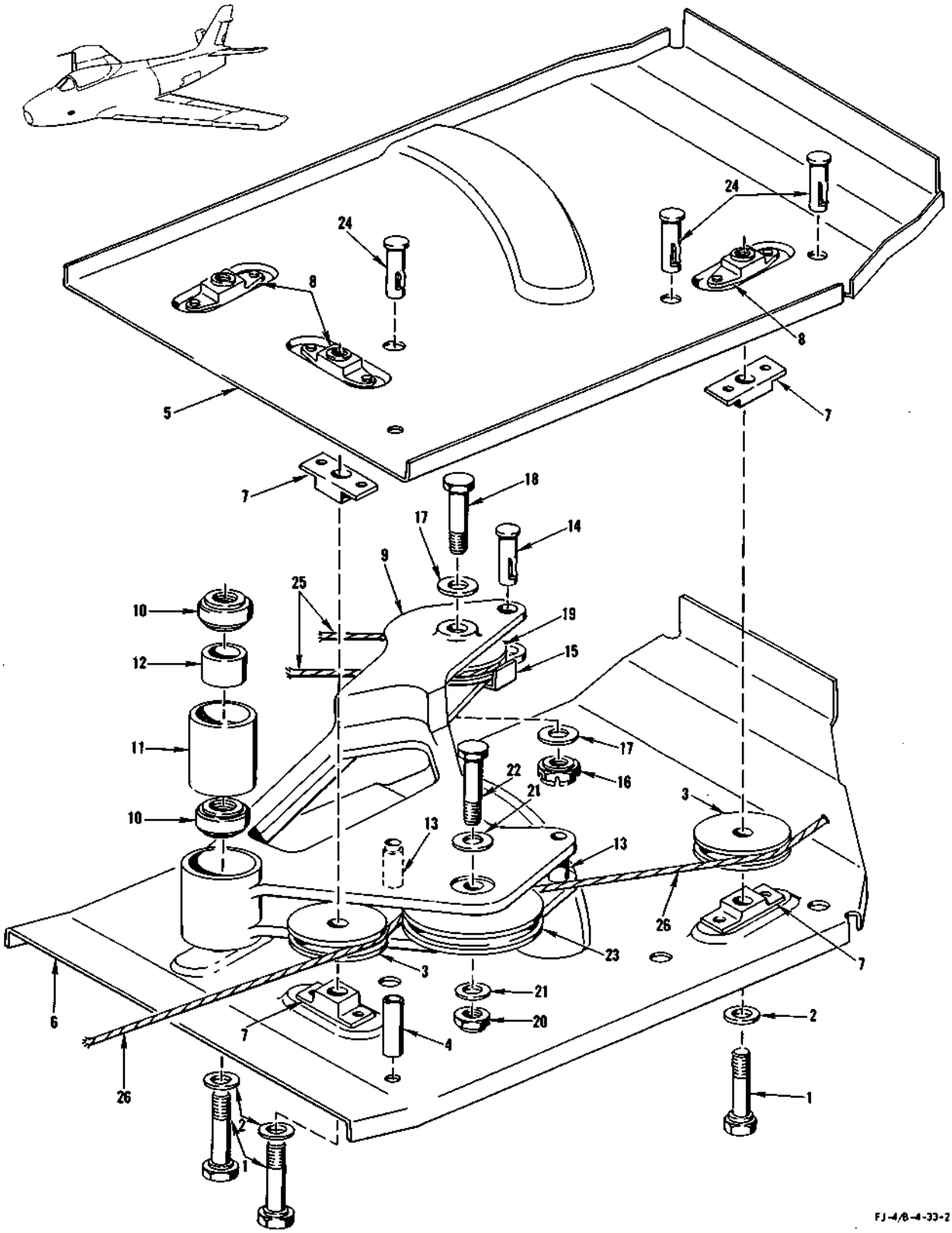

FIGURE 201 - LANDING GEAR EMERGENCY RELEASE BRACKET ASSEMBLY AND FUSELAGE STATION 71.75 PULLEYS

ARRESTING GEAR CONTROL

FIGURE & INDEX NO.	PART NUMBER	1 2 3 4 5 6 7 NOMENCLATURE	UNITS PER ASSY.	USABLE ON CODE
203-1	52-018-078-0875	ROLLPIN (EN)(72962)	1	
	181-56391	HANDLE ASSEMBLY, Arresting gear release (superseded by 181-56391-11 for future procurement)	1	BR
	181-56391-11	HANDLE ASSEMBLY, Arresting gear release (supersedes 181-56391 for future procurement)	1	BS
-2	181-56393	. HANDLE, Arresting gear release	1	
-3	AN365C10H5	. SCREW	1	
-4	181-56394	. SHAFT, Arresting gear release handle	1	BR
	181-56394-3	. SHAFT, Arresting gear release handle	1	BS
-5	AN565D8H3	. SCREW	1	
-6	AN3157-2	. LIGHT ASSEMBLY	1	
	AN3121-313	. LAMP	1	
-7	181-56391-3	. TUBE, Arresting gear release handle assembly	1	
-8	209-56717	CABLE ASSEMBLY, Arresting gear control forward fuselage	1	
	RA2487-3	. BALL TERMINAL (ACA)(01976)	1	
	AN669L3LH	. TERMINAL	1	
-9	181-56399-31	SUPPORT ASSEMBLY, Arresting gear release handle	1	
	ATTACHING PARTS			
-10	AN3-5A	BOLT	4	
-11	2W18-10	WASHER, Flat (NA)(89372)	4	
	---*---			
-12	AN310-3	. NUT	1	
-13	AN960D4	. WASHER	1	
-14	AN23-21	. BOLT	1	
-15	194-56397	. SPRING, Arresting gear release handle pawl	1	
-16	181-56395-3	. PAWL, Arresting gear release handle support	1	
-17	AN960D3	. WASHER	1	
-18	AN392-27	. PIN	1	
-19	52-022-094-0625	. ROLLPIN (EN)(72962)	2	
-20	181-56392-3	. FITTING, Arresting gear release handle support	1	
-21	181-52016	PLATE, Control cable seal base	1	
-22	3S11-3	SEAL, Control cable pressure seal (NA)(89372)	1	
-23	7R5	RETAINER, Control cable pressure seal (NA)(89372)	1	
	ATTACHING PARTS			
-24	NAS221-13	SCREW	2	
	2W18-10M	WASHER, Flat (NA) (89372) (forward side)	2	
	2W1-13-18-64	WASHER, Plain (NA) (89372) (aft side)	2	
	AN365-1032	NUT	2	
	---*---			
-25	194-56757	BRACKET, Arresting gear control system fuselage station 71.75	1	
	ATTACHING PARTS			
	AN3-10A	BOLT	3	
	2W18-10	WASHER, Flat (NA)(89372)	6	
	AN365-1032	NUT	3	
	---*---			
-26	AN219-2	PULLEY	2	
	ATTACHING PARTS			
	AN4-14A	BOLT	2	
	2W18-416	WASHER, Flat (NA)(89372)	4	
	AN365-428	NUT	2	
	---*---			
-27	AN365-1032	NUT	2	
-28	2W18-10	WASHER, Flat (NA) (89372) (Install on aft side)	4	
-29	AN3-10A	BOLT	2	
-30	194-56723	FAIRLEAD, Arresting gear control system fume seal	1	
-31	194-56722	SEAL, Arresting gear control system fume	1	
-32	AN155-16L	BARREL	1	
-33	209-56718	CABLE ASSEMBLY, Arresting gear control forward fuselage sector	1	DN
	AN664C3	. TERMINAL	1	DN
	AN669L3RH	. TERMINAL	1	DN
-34	209-56716	BRACKET ASSEMBLY, Arresting gear control system fuselage station 118.568	1	DN
	NAS42DD4S7	. SPACER	2	DN
-35	AN364-428	NUT	1	DN
-36	2W18-416M	WASHER, Flat (NA)(89372)	2	DN
-37	AN24-23	BOLT	1	DN
	209-56725	DRUM ASSEMBLY, Arresting gear control system fuselage station 118.568	1	DN
-38	209-56725-3	. DRUM SUBASSEMBLY, Arresting gear control system fuselage station 118.568	1	DN
-39	AN201KP4A	. BEARING	2	DN
-40	4S6-4-329	. SPACER, Plain dual bearing (NA)(89372)	1	DN
-41	52-018-078-0875	ROLLPIN (EN)(72962)	2	DN
-42	209-56719	CABLE ASSEMBLY, Arresting gear control forward fuselage intermediate	1	DN
	AN664C3	. TERMINAL	1	DN
	AN669L3LH	. TERMINAL	1	DN
-43	209-56748	FAIRLEAD, Control cable fume seal	1	AM
-44	209-56749	SEAL, Control cable fume	1	AM
-45	AN365-832	NUT	2	AM
-46	2W18-8	WASHER, Flat (NA)(89372)	2	AM
-47	AN515-8R10	SCREW	2	AM
-48	209-56726	BRACKET ASSEMBLY, Arresting gear control system fuselage station 114.156 pulley	1	DP
-49	AN219-2	. PULLEY	2	DP
-50	AN365-428	. NUT	2	DP
-51	2W18-416M	. WASHER, Flat (NA)(89372)	4	DP
-52	AN4-10A	. BOLT	2	DP
-53	209-56727	CABLE ASSEMBLY, Arresting gear control forward fuselage forward	1	DP

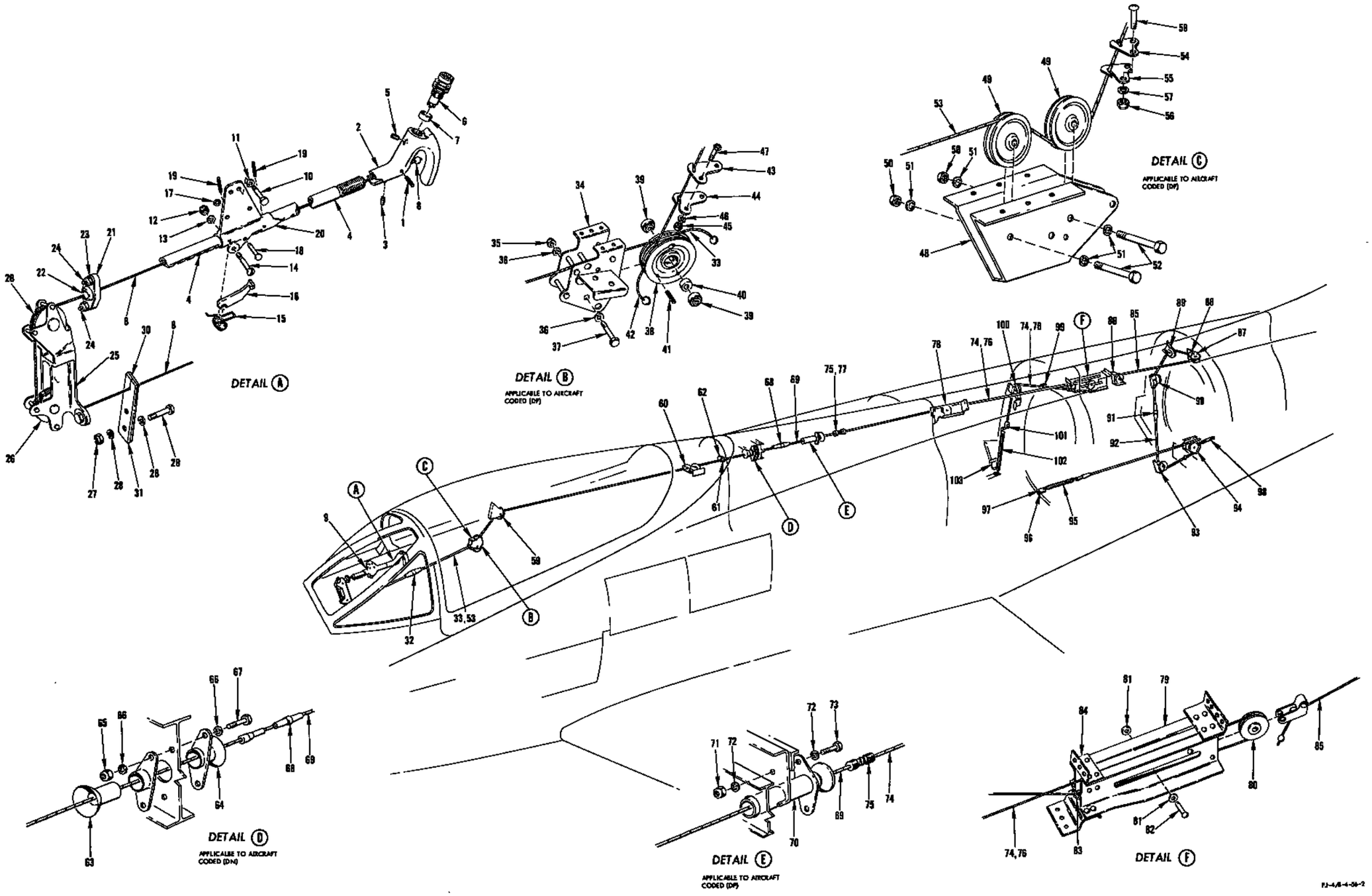

FIGURE 203 - ARRESTING GEAR CONTROL

ARRESTING GEAR CONTROL

FIGURE & INDEX NO.	PART NUMBER	1 2 3 4 5 6 7 NOMENCLATURE	UNITS PER ASSY.	USABLE ON CODE
203	AN669S3LH	. TERMINAL	1	DP
	AN669L3RH	. TERMINAL	1	DP
-54	209-56752	RETAINER, Arresting gear control cable fume seal	1	AN
-55	209-56753	SEAL, Arresting gear control cable fume	1	AN
-56	AN365-832	NUT	2	AN
-57	2W18-8	WASHER, Flat (NA) (89372)	2	AN
-58	AN515-8R10	SCREW	2	AN
-59	209-56706	BRACKET ASSEMBLY, Arresting gear control system fuselage station 122.5	1	
	ATTACHING PARTS			
	AN3-5A	BOLT	2	
	2W18-10	WASHER, Flat (NA) (89372)	2	
	---*---			
	AN219-2	. PULLEY	1	
	ATTACHING PARTS			
	AN4-10A	. BOLT	1	
	2W18-416M	. WASHER, Flat (NA) (89372)	2	
	AN365-428	. NUT	1	
	---*---			
-60	194-56746	BRACKET ASSEMBLY, Arresting gear control system fuselage station 168.5 pulley	1	
	AN219-2	. PULLEY	1	
	ATTACHING PARTS			
	AN4-10	. BOLT	1	
	2W18-416L	. WASHER, Flat (NA) (89372)	2	
	AN310-4	. NUT	1	
	---*---			
-61	209-52049	SEAL, Control cable	1	
-62	209-52046	FAIRLEAD, Fume seal	1	
-63	209-56732	GUIDE, Arresting gear control system station 190 forward assembly of	1	DP
-64	209-56731	GUIDE, Arresting gear control system station 190 aft assembly of	1	DP
-65	AN365-1032	NUT	2	DP
-66	2W18-10M	WASHER, Flat (NA) (89372)	4	DP
-67	AN3-6A	BOLT	2	DP
-68	AN155-16S	BARREL	1	
-69	209-56720	CABLE ASSEMBLY, Arresting gear control forward fuselage aft	1	DN
	AN663C3	. TERMINAL	1	DN
	AN669L3RH	. TERMINAL	1	DN
	209-56728	CABLE ASSEMBLY, Arresting gear control forward fuselage aft	1	DP
	AN663C3	. TERMINAL	1	DP
	AN669S3RH	. TERMINAL	1	DP
-70	209-56730	GUIDE, Arresting gear control system station 215 assembly of	1	DP
-71	AN365-1032	NUT	2	DP
-72	2W18-10M	WASHER, Flat (NA) (89372)	4	DP
-73	AN3-4A	BOLT	2	DP
-74	209-56760	CABLE ASSEMBLY, Arresting gear control	1	DN
	AN663C3	. TERMINAL	1	DN
	AN667-3	. TERMINAL	1	DN
-75	RA2258-3	. DISCONNECT (ACA) (01976)	1	DN
-76	209-56729	CABLE, Arresting gear control aft fuselage forward assembly of	1	DP
	AN663C3	. TERMINAL	1	DP
	AN667-3	. TERMINAL	1	DP
-77	RA2258-3	. DISCONNECT (ACA) (01976)	1	DP
-78	209-52080-1	BRACKET ASSEMBLY, Stabilizer and rudder control fuselage station 246 to station 251.5--pulley LH	1	
	209-52080-2	BRACKET ASSEMBLY, Stabilizer and rudder control fuselage station 246 to station 251.5--pulley RH	1	
	AN219-2	. PULLEY (inboard)	1	
	ATTACHING PARTS			
	AN4-10A	. BOLT	1	
	2W18-416	. WASHER, Flat (NA) (89372)	2	
	AN365-428	. NUT	1	
	---*---			
-79	209-56764	BRACKET ASSEMBLY, Arresting gear control fuselage station 286.5 upper	1	
	209-56765	. SPACER, Arresting gear control fuselage station 286.5 upper bracket	1	
	NAS42DD4-28	. SPACER	1	
	NAS42DD5-40	. SPACER	1	
-80	AN219-2	PULLEY	1	
	ATTACHING PARTS			
-81	2W1AL16-20-64	WASHER, Plain (NA) (89372)	2	
-82	AN394-29	PIN	1	
	---*---			
-83	AN219-2	PULLEY	1	
	ATTACHING PARTS			
	AN4-10A	BOLT	1	
	2W18-416	WASHER, Flat (NA) (89372)	2	
	AN365-428	NUT	1	
	---*---			
-84	209-56773	CLIP, Arresting gear control fuselage station 286.5 bracket	1	
-85	209-56761	CABLE ASSEMBLY, Arresting gear control aft fuselage intermediate	1	
	209-56766	. CLEVIS, Arresting gear control cable	1	
	AN664C3	. TERMINAL	1	
	AN669L3RH	. TERMINAL	1	
-86	209-56756	BRACKET ASSEMBLY, Arresting gear control fuselage station 298 pulley	1	
	NAS42DD4-28	. SPACER	1	
	AN219-2	. PULLEY	1	

ARRESTING GEAR CONTROL

FIGURE & INDEX NO.	PART NUMBER	1 2 3 4 5 6 7 NOMENCLATURE	UNITS PER ASSY.	USABLE ON CODE
203		ATTACHING PARTS		
	AN4-10A	. BOLT	1	
	2W18-416	. WASHER, Flat (NA)(89372)	2	
	AN365-428	. NUT	1	
		---*---		
-87	209-56768	BRACKET ASSEMBLY, Arresting gear control fuselage station 323 upper	1	
	AN219-4	. PULLEY	1	
		ATTACHING PARTS		
	AN4-10	. BOLT	1	
	2W18-416L	. WASHER, Flat (NA)(89372)	2	
	AN366F428	. NUT	1	
		---*---		
-88	181-56744	PLATE, Arresting gear control system cable seal	2	
		ATTACHING PARTS		
	AN3-6A	BOLT	2	
	2W18-10	WASHER, Flat (NA)(89372)	4	
	AN365-1032	NUT	2	
		---*---		
-89	209-56759	BRACKET ASSEMBLY, Arresting gear control fuselage station 323 pulley	1	
	AN219-4	. PULLEY	1	
		ATTACHING PARTS		
	AN4-11A	. BOLT	1	
	2W18-416	. WASHER, Flat (NA)(89372)	2	
	AN365-428	. NUT	1	
		---*---		
-90	194-56730	BRACKET ASSEMBLY, Arresting gear control system fuselage station 324.719 BL 15.375-RH pulley	1	
		ATTACHING PARTS		
	AN3-7A	BOLT	2	
	2W18-10	WASHER, Flat (NA)(89372)	4	
	AN365-1032	NUT	2	
		---*---		
	AN219-4	. PULLEY	1	
		ATTACHING PARTS		
	AN4-11A	. BOLT	1	
	2W18-416	. WASHER, Flat (NA)(89372)	2	
	AN365-428	. NUT	1	
		---*---		
-91	AN155-16L	BARREL	1	
-92	209-56762	CABLE ASSEMBLY, Arresting gear control aft fuselage aft	1	
	AN669L3RH	. TERMINAL	1	
	AN663C3	. TERMINAL	1	
	AN668-3	. TERMINAL	1	
-93	209-56758	BRACKET ASSEMBLY, Arresting gear control fuselage station 323 lower pulley	1	
	AN219-4	. PULLEY	1	
		ATTACHING PARTS		
	AN4-11A	. BOLT	1	
	2W18-416	. WASHER, Flat (NA)(89372)	2	
	AN365-428	. NUT	1	
		---*---		
-94	209-56162	SECTOR ASSEMBLY, Arresting gear uplock	1	
		ATTACHING PARTS		
	AN3-10A	BOLT	1	
	2W18-10	WASHER, Flat (NA)(89372)	2	
	AN365-1032	NUT	1	
		---*---		
	NAS427K23	PIN	1	
	NAS43DD3-36	SPACER	1	
-95	209-56755	SPRING, Tension	1	
-96	181-56719	CLIP, Arresting gear release spring adjustment	1	
		ATTACHING PARTS		
-97	AN3-5A	BOLT	1	
	2W18-10	WASHER, Flat (NA)(89372)	2	
	AN365-1032	NUT	1	
		---*---		
-98	181-56159-3	ROD ASSY, Arresting gear uplock and bumper operation (see Catapult and Arresting Gear)	1	
-99	209-56767	FAIRLEAD, Arresting gear control cable	1	
		ATTACHING PARTS		
	AN3-5A	BOLT	2	
	2W18-10	WASHER, Flat (NA)(89372)	4	
	AN365-1032	NUT	2	
		---*---		
-100	209-56763	BRACKET ASSEMBLY, Arresting gear control fuselage station 286.5 pulley	1	
	AN219-4	. PULLEY	1	
		ATTACHING PARTS		
	AN4-10A	. BOLT	1	
	2W18-416	. WASHER, Flat (NA)(89372)	2	
	AN365-428	. NUT	1	
		---*---		
-101	AN42-5	BOLT	1	
	2W18-10	WASHER, Flat (NA)(89372)	2	
	AN320-3	NUT	1	
-102	209-56772	SPRING, Tension	1	
-103	209-58604	HYDRAULIC EQUIPMENT ASSEMBLY, Valve arresting gear selector (see Hydraulics System)	1	

ENGINE CONTROL AND POWER QUADRANT

FIGURE & INDEX NO.	PART NUMBER	1 2 3 4 5 6 7 NOMENCLATURE	UNITS PER ASSY.	USABLE ON CODE	S/C NO.
204-1	181-43034	HANDLE ASSEMBLY, Engine control catapult hold	1		
-2	NAS51-37	. RING	1		
-3	181-43038	. HANDLE ASSEMBLY, Engine control catapult hold	1		
-4	181-43036	. SPRING, Engine control catapult hold handle rotating	1		
-5	181-43037	. SHAFT ASSEMBLY, Engine control catapult hold handle adjusting	1		
-6	AN316-6R	. NUT	1		
-7	181-43035	. BRACKET ASSEMBLY, Engine control catapult hold handle supporting	1		
-8	AN4-5A	BOLT	3		
-9	2W18-416M	WASHER, Flat (NA)(89372)	3		
-10	AN365-428	NUT	3		
-11	50032	QUADRANT ASSEMBLY (RHW) (80477) (for breakdown see Technical Manual NA 03-40EA-506)	1	LE	501
-12	50032-1	QUADRANT ASSEMBLY (RHW) (80477) (for breakdown see Technical Manual NA 03-40EA-506)	1	KY	
-13	AN4-10A	BOLT	4		
	2W18-416M	WASHER, Flat (NA) (89372)	8		
	AN365-428	NUT	4		
-14	181-43714	BRACKET ASSEMBLY, Engine control system fuselage station 100.687	1		
	181-43713	GUARD, Engine control pulley	1		
-15	FL3C6	PULLEY (FAF) (21335)	1		
	ATTACHING PARTS				
	AN3-11A	BOLT	1		
	2W18-10	WASHER, Flat (NA) (89372)	2		
	AN365-1032	NUT	1		
	---*---				
-16	AN219-2	PULLEY	1		
	ATTACHING PARTS				
	AN4-11A	BOLT	1		
	2W18-416	WASHER, Flat (NA) (89372)	2		
	AN365-428	NUT	1		
	---*---				
-17	3S10-5	SEAL, 3/32 cable elastic pressure (NA) (89372)	2		
-18	181-43704	BRACKET ASSEMBLY, Engine control system fuselage station 121 cable pulley	1		
	AN210-2B	. PULLEY	2		
-19	AN23-18	. BOLT	1		
	2W18-10	. WASHER, Flat (NA) (89372)	2		
	AN320-3	. NUT	1		
-20	AN393-29	PIN	1		
-21	209-43711-5	SEAL, Fume	1		
	2F4-2	FAIRLEAD (NA) (89372)	1		
	ATTACHING PARTS				
	AN515-8R10	SCREW	2		
	2W18-8	WASHER, Flat (NA) (89372)	2		
	AN365-832	NUT	2		
	---*---				
-22	209-43711-3	SEAL, Fume	1		
	2F4-2	FAIRLEAD (NA) (89372)	1		
	ATTACHING PARTS				
	AN515-8R10	SCREW	2		
	2W18-8	WASHER, Flat (NA) (89372)	2		
	AN365-832	NUT	2		
	---*---				
-23	AN155-16L	BARREL	1		
-24	209-43714	BRACKET ASSEMBLY, Engine control system fuselage station 211	1		
	209-43714-11	. BRACKET SUBASSEMBLY, Engine control system fuselage station 211	1		
-25	AN219-4	. PULLEY	2		
	ATTACHING PARTS				
	AN4-14A	. BOLT	1		
	2W18-416M	. WASHER, Flat (NA) (89372)	2		
	AN365-428	. NUT	1		
	---*---				
-26	NAS427K17	PIN	2		
-27	AN155-16L	BARREL	1		
-28	209-43705	CABLE ASSEMBLY, Engine control system aft	1		
	RA2487-3	. BALL TERMINAL (ACA) (01976)	1		
	AN669L3LH	. TERMINAL	1		
-29	209-43709	CABLE ASSEMBLY, Engine control aft outboard	1		
	RA2487-3	. BALL TERMINAL (ACA) (01976)	1		
	AN669L3LH	. TERMINAL	1		
-30	209-43715	BRACKET ASSEMBLY, Engine control system wing center splice	1		
	209-43715-11	. BRACKET SUBASSEMBLY, Engine control system wing center splice	1		
	AN219-2	. PULLEY	2		
	ATTACHING PARTS				
	AN4-15A	. BOLT	1		
	2W18-416M	. WASHER, Flat (NA) (89372)	2		
	AN365-428	. NUT	1		
	---*---				
-31	NAS427K17	PIN	2		
-32	209-43708	BRACKET, Engine control system aft cable drum and pulley	1		
-33	MS20004-14	BOLT	1		
	2W10-4	WASHER, Countersunk (NA) (89372)	1		
-34	MS20004-30	BOLT	2		
	2W10-4	WASHER, Countersunk (NA) (89372)	2		

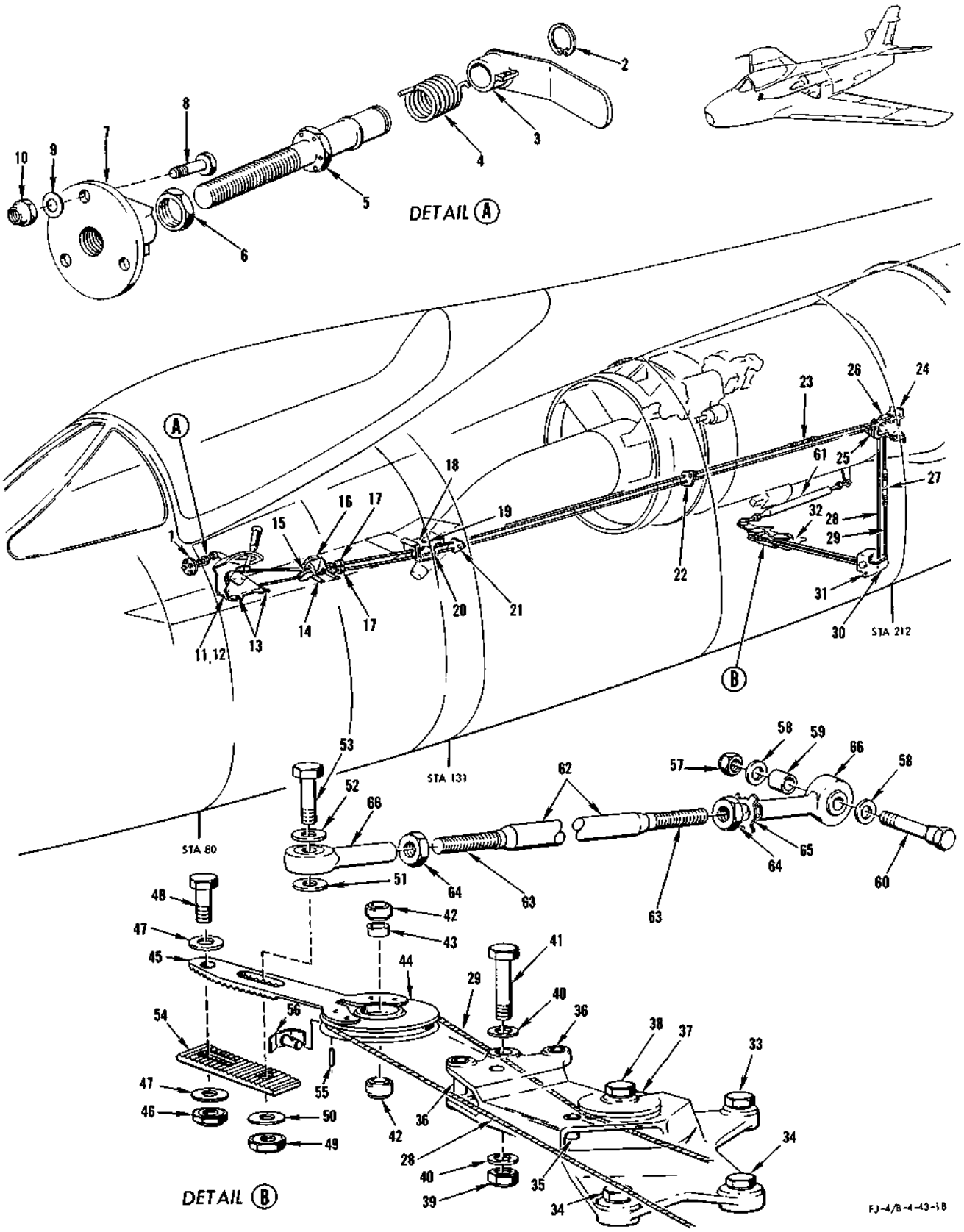

FIGURE 204 - ENGINE CONTROL AND POWER QUADRANT

ENGINE CONTROL AND POWER QUADRANT

FIGURE & INDEX NO.	PART NUMBER	1 2 3 4 5 6 7 B NOMENCLATURE	UNITS PER ASSY.	USABLE ON CODE	S/C NO.
204 -35	NAS427K16	PIN	1		
-36	NAS427K21	PIN	2		
-37	AN219-2	PULLEY	1		
-38	AN4-13A	BOLT	1		
	2W18-416	WASHER, Flat (NA) (89372)	2		
	AN365-428	NUT	1		
-39	AN365-1032	NUT	1		
-40	2W18-10M	WASHER, Flat (NA) (89372)	2		
-41	AN3-16A	BOLT	1		
	209-43706	CABLE DRUM ASSEMBLY, Engine control system aft complete	1		
	194-43726-101	. DRUM ASSEMBLY, Engine control system aft cable	1		
-42	AN200K3L	. . BEARING	2		
-43	4S6-3-0.260	. . SPACER, Plain dual bearing (NA) (89372)	1		
-44	194-43726-15	. . DRUM, Engine control system aft cable	1		
-45	209-43727	. ARM, Engine control system aft cable drum	1		
-46	AN365-1032	NUT	1		
-47	2W18-10M	WASHER, Flat (NA) (89372)	2		
-48	AN3-6A	BOLT	1		
-49	AN365-428	NUT	1		
-50	2W18-416	WASHER, Flat (NA) (89372)	1		
-51	2W1-16-20-64	WASHER, Plain (NA) (89372)	1		
-52	2W1AL17-28-32	WASHER, Plain (NA) (89372)	1		
-53	AN4-14A	BOLT	1		
-54	194-43707	PLATE, Engine control cable drum adjusting	1		
-55	59-018-078-0437	ROLLPIN (EN) (72962)	1		
-56	194-43720	RETAINER, Throttle control aft sector cable	1		
-57	AN363-428	NUT	1		
-58	2W1AL17-28-32	WASHER, Plain (NA) (89372)	2		
-59	NAS43-4-28	SPACER	1		
-60	194-42023	BOLT, Power lever connecting	1		
-61	194-43717-101	ROD ASSEMBLY, Engine control system aft	1		
	194-43717-11	. ROD SUBASSEMBLY, Engine control system aft	1		
-62	194-43717-13	. . TUBE, Engine control system aft rod subassembly	1		
-63	1R11-6-35-524	. . ROD END, Knurled threaded (NA) (89372)	2		
-64	AN316-5	. NUT	2		
-65	2W11-5	. WASHER, Tab lock (NA) (89372)	1		
-66	RE4F5	. BEARING (FAF) (21335)	2		

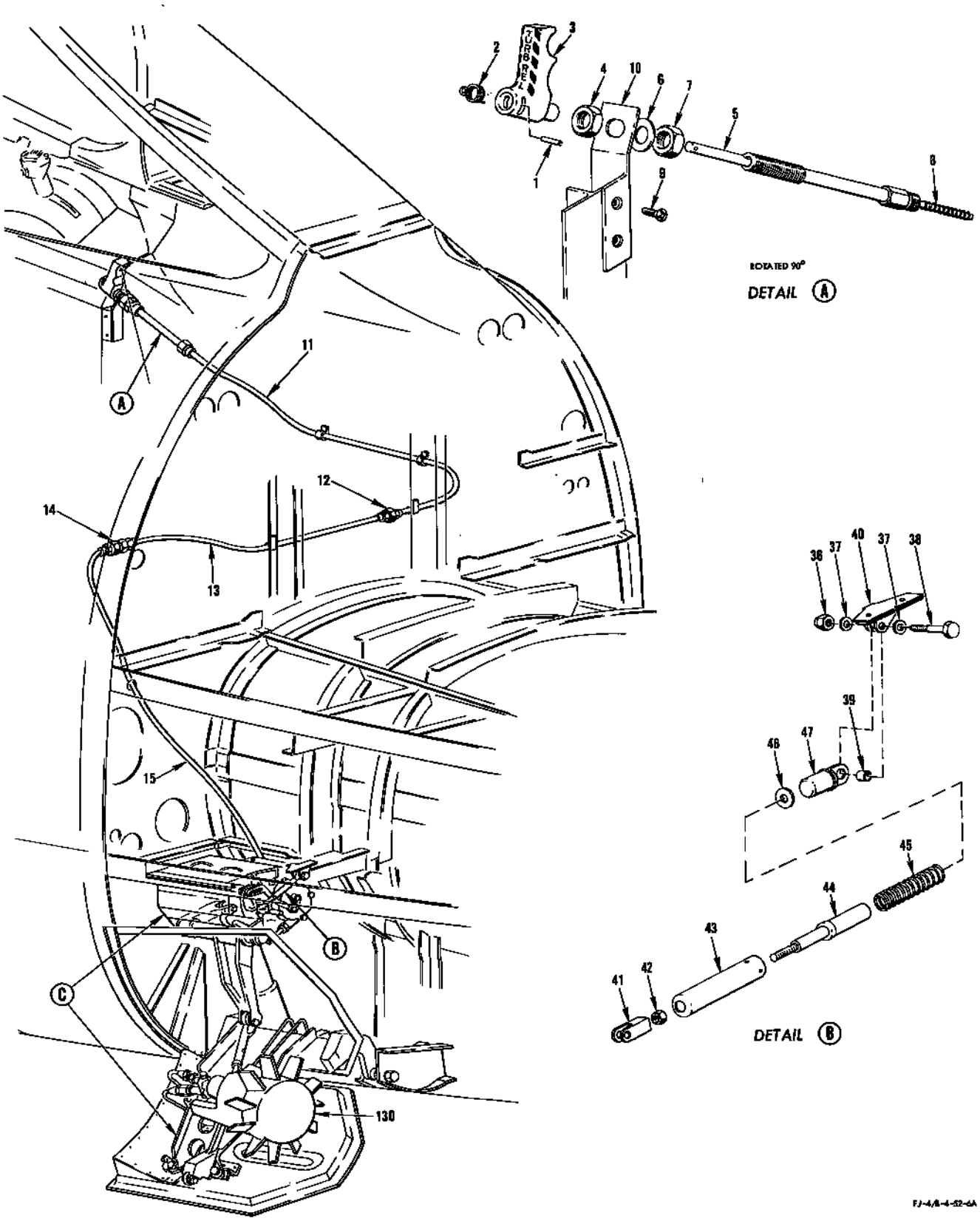

FIGURE 205 - RAM-AIR TURBINE RELEASE CONTROLS - APPLICABLE TO AIRCRAFT CODED (BK) (Sheet 1)

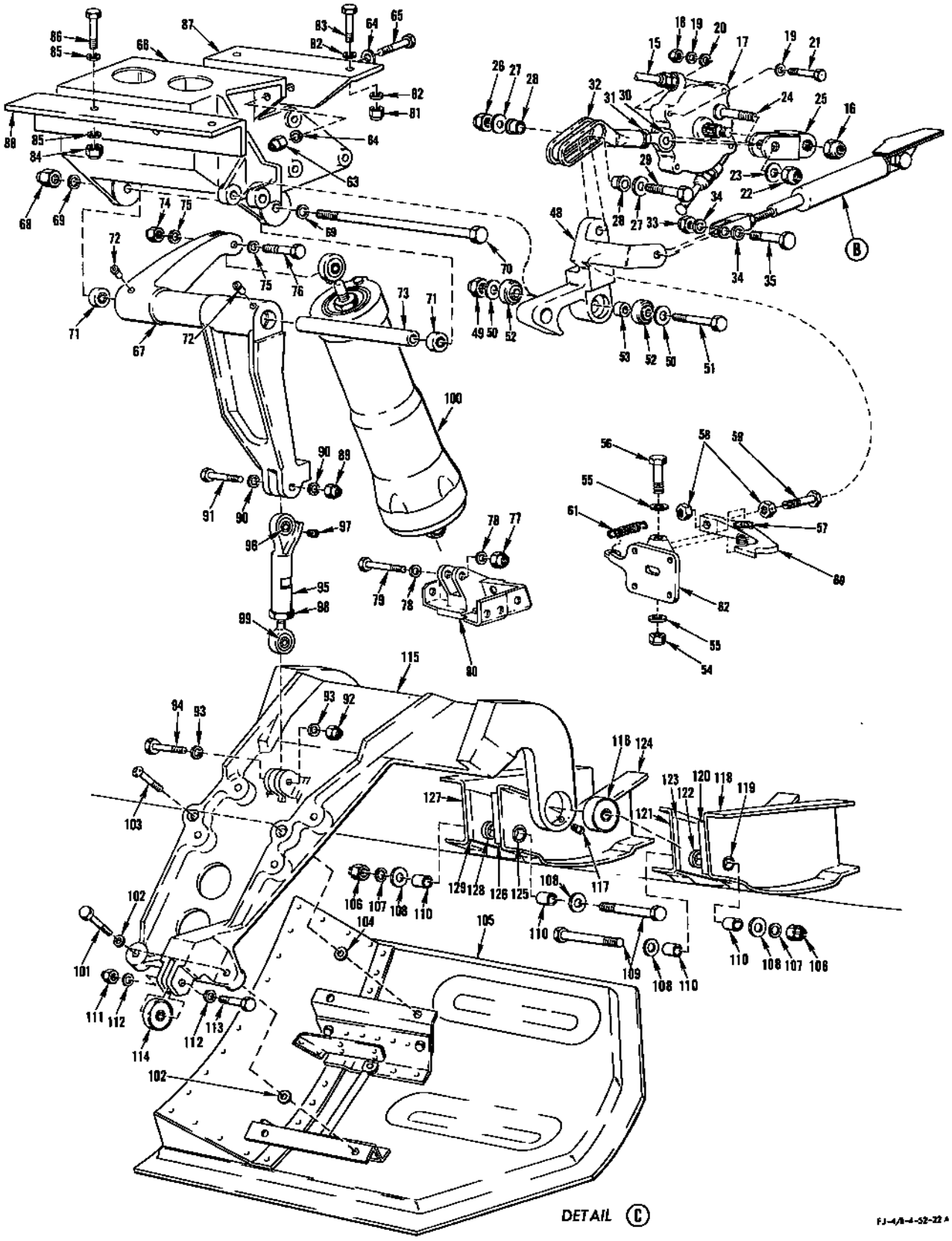

FIGURE 205 - RAM-AIR TURBINE RELEASE CONTROLS - APPLICABLE TO AIRCRAFT CODED (BK) (Sheet 2)

RAM-AIR TURBINE RELEASE CONTROLS - APPLICABLE TO AIRCRAFT CODED (BK)

FIGURE & INDEX NO.	PART NUMBER	1 2 3 4 5 6 7 NOMENCLATURE	UNITS PER ASSY.	USABLE ON CODE	S/C NO.
205-1	59-022-094-0750	ROLLPIN (EN) (72962)	1	BK	
-2	209-520149	SPRING, Turbine release control handle torsion	1	BK	
-3	209-520148	HANDLE, Turbine release control	1	BK	
	11213-2	PUSH-PULL HANDLE ASSEMBLY (TEX) (78710)	1	BK	
-4	A7038-1	. NUT, Stop (TEX) (78710)	1	BK	
-5	B11240	. SLIDER ASSEMBLY, Outer (TEX) (78710)	1	BK	
-6	A7033	. WASHER (TEX) (78710)	1	BK	
-7	AN316-8R	. NUT	1	BK	
-8	B11242-2	. SLIDER AND CABLE ASSEMBLY, Inner (TEX) (78710)	1	BK	
-9	SP1561-1032-10	SCREW, Flat head (SH) (78189)	2	BK	
-10	215-520110	SUPPORT, Ram-air turbine cockpit control	1	BK	
-11	215-520111-119	CONDUIT ASSEMBLY, Ram-air turbine (supersedes 215-520111-105 for future procurement)	1	BK	
-12	AN6329	CONNECTOR (TEX) (78710)	1	BK	
-13	215-520111-117	CONDUIT ASSEMBLY, Ram-air turbine (supersedes 215-520111-115 for future procurement)	1	BK	
-14	B6602	CONNECTING BODY (TEX) (78710)	1	BK	
	AN316-8R	NUT	1	BK	
	AN936A816	WASHER	1	BK	
-15	215-520111-103	CONDUIT ASSEMBLY, Ram-air turbine	1	BK	
-16	AN364-524	NUT	1	BK	
-17	C7259-3	CONTROL BOX (TEX) (78710)	1	BK	
	ATTACHING PARTS				
-18	AN365-1032	NUT	3	BK	
-19	2W18-10M	WASHER, Flat (NA) (89372)	6	BK	
-20	2W18-10	WASHER, Flat (NA) (89372)	3	BK	
-21	AN3-13A	BOLT	3	BK	
	---*---				
-22	AN365-428	NUT	1	BK	
-23	2W18-416	WASHER, Flat (NA) (89372)	1	BK	
-24	NAS334PA13	BOLT	1	BK	
-25	209-520142	ARM, Ram-air turbine forward release control	1	BK	
-26	AN365-428	NUT	1	BK	
-27	2W18-416	WASHER, Flat (NA) (89372)	2	BK	
-28	4B20B4-005	BUSHING, Press fit flanged (NA) (89372)	2	BK	
-29	AN174-11A	BOLT	1	BK	
	209-520140	ROD ASSEMBLY, Ram-air turbine latch release	1	BK	
-30	RE4M6	. ROD END (FAF) (21335)	1	BK	
-31	AN7-6	. NUT	1	BK	
-32	209-520141	. ROD END, Ram-air turbine latch release (magnetic inspected)	1	BK	
-33	AN365-1032	NUT	1	BK	
-34	2W18-10	WASHER, Flat (NA) (89372)	2	BK	
-35	AN3-6A	BOLT	1	BK	
-36	AN310-3	NUT (finger tight only)	1	BK	
-37	2W18-10	WASHER, Flat (NA) (89372)	2	BK	
-38	AN3-6	BOLT	1	BK	
-39	4B21B3-006	BUSHING, Spacer (NA) (89372)	1	BK	
-40	209-520136	BRACKET ASSEMBLY, Ram-air turbine latch bungee support	1	BK	
	209-520146	BUNGEE ASSEMBLY, Ram-air turbine latch	1	BK	
-41	215-520116	. CLEVIS, Ram-air turbine latch bungee	1	BK	
-42	209-52517	. NUT, Stop ram-air turbine latch bungee	1	BK	
	209-520146-11	. BUNGEE SUBASSEMBLY, Ram-air turbine latch	1	BK	
-43	215-520118-3	. . HOUSING, Ram-air turbine latch bungee	1	BK	
-44	209-520145	. . ROD, Ram-air turbine latch bungee (magnetic inspected)	1	BK	
-45	209-520175	. . SPRING, Compression	1	BK	
-46	2W1-16-24-32	. . WASHER, Plain (NA) (89372)	1	BK	
-47	215-520121	. . FITTING, Ram-air turbine latch bungee end	1	BK	
-48	209-520138	LATCH ASSEMBLY, Ram-air turbine uplock	1	BK	
	ATTACHING PARTS				
-49	AN365-428	NUT	1	BK	
-50	2W18-416	WASHER, Flat (NA) (89372)	2	BK	
-51	AN174-20A	BOLT	1	BK	
	---*---				
-52	AN201KP4A	. BEARING	2	BK	
-53	4S6-4-0.344	. SPACER, Plain dual bearing (NA) (89372)	1	BK	
-54	AN365-1032	NUT	1	BK	
-55	2W18-10	WASHER, Flat (NA) (89372)	2	BK	
-56	AN3-12A	BOLT	1	BK	
-57	4B19B3-013	BUSHING, Press fit plain (NA) (89372)	1	BK	
-58	1N7-4A	NUT, Check (NA) (89372)	2	BK	
-59	NAS428KH4-10	BOLT	1	BK	
-60	209-520143	FLAG, Ram-air turbine latch indicating	1	BK	
-61	209-520147	SPRING, Tension	1	BK	
-62	209-520144	SUPPORT ASSEMBLY, Ram-air turbine latch indicating flag	1	BK	
-63	AN365-524	NUT	4	BK	
-64	2W18-516	WASHER, Flat (NA) (89372)	8	BK	
-65	AN5-6A	BOLT	4	BK	
-66	209-520137-3	SUPPORT, Ram-air turbine bellcrank (supersedes 209-520137 for future procurement)	1	BK	
-67	209-520174-11	BELLCRANK ASSEMBLY, Ram-air turbine (supersedes 209-520179 and is superseded by 209-520174-21 for future procurement)	1	BK	
	209-520174-21	BELLCRANK ASSEMBLY, Ram-air turbine (supersedes 209-520174-11 for future procurement)	1	BK	

RAM-AIR TURBINE RELEASE CONTROLS - APPLICABLE TO AIRCRAFT CODED (BK)

FIGURE & INDEX NO.	PART NUMBER	1 2 3 4 5 6 7 NOMENCLATURE	UNITS PER ASSY.	USABLE ON CODE	S/C NO.
205		ATTACHING PARTS			
-68	AN365-624	NUT	1	BK	
-69	2W18-616	WASHER, Flat (NA) (89372)	2	BK	
-70	AN176-53A	BOLT	1	BK	
		---*---			
-71	KWB-6G	. BEARING (HLF) (97613)	2	BK	
-72	NAS516-1	. FITTING, Lubricator	2	BK	
-73	4S6-6-3.194	. SPACER, Plain dual bearing (NA) (89372)	1	BK	
-74	AN365-524	NUT	1	BK	
-75	2W18-516	WASHER, Flat (NA) (89372)	2	BK	
-76	AN175-12A	BOLT	1	BK	
-77	AN365-524	NUT	1	BK	
-78	2W18-516	WASHER, Flat (NA) (89372)	2	BK	
-79	AN175-12A	BOLT	1	BK	
-80	209-520132	SUPPORT, Ram-air turbine operating bungee lower	1	BK	
-81	AN365-624	NUT	1	BK	
-82	2W18-616	WASHER, Flat (NA) (89372)	2	BK	
-83	AN6-6A	BOLT	1	BK	
-84	AN365-428	NUT	3	BK	
-85	2W18-416	WASHER, Flat (NA) (89372)	6	BK	
-86	AN4-5A	BOLT	3	BK	
-87	194-31112-215	ANGLE, Frame assembly fuselage station 0 to station 53	1	BK	
-88	194-31112-217	ANGLE, Frame assembly fuselage station 0 to station 53	1	BK	
	209-520133	ROD ASSEMBLY, Ram-air turbine	1	BK	
		ATTACHING PARTS			
-89	AN365-428	NUT	1	BK	
-90	2W18-416	WASHER, Flat (NA) (89372)	2	BK	
-91	AN174-12A	BOLT	1	BK	
-92	AN365-428	NUT	1	BK	
-93	2W18-416	WASHER, Flat (NA) (89372)	2	BK	
-94	AN174-13A	BOLT	1	BK	
		---*---			
-95	209-520173-11	. ROD END ASSEMBLY, Ram-air turbine (supersedes 209-520134 for future procurement) (magnetic inspected)	1	BK	
-96	KLS-4	. . BEARING (HLF) (97613)	1	BK	
-97	NAS516-1	. . FITTING, Lubricator	1	BK	
-98	AN316-6	. NUT	1	BK	
-99	HRBH-4-EFN	. BEARING, Rod end (HLF) (97613)	1	BK	
-100	209-520188-11	BUNGEE ASSEMBLY, Ram-air turbine (supersedes 209-520186 for future procurement) (see figure 206 for breakdown)	1	BK	
-101	AN174-10A	BOLT	2	BK	
-102	2W18-416	WASHER, Flat (NA) (89372)	4	BK	
-103	NAS334PA14	BOLT	2	BK	
-104	2W18-416	WASHER, Flat (NA) (89372)	2	BK	
-105	209-31099	FAIRING ASSEMBLY, Fuselage station 38.5 to station 53 RH air turbine (superseded by 209-31099-61 for future procurement)	1	ER	
	209-31099-61	FAIRING ASSEMBLY, Fuselage station 38.5 to station 53 RH air turbine (supersedes 209-31099 for future procurement)	1	DJ	
-106	AN310-4	NUT	2	BK	
-107	2W18-416	WASHER, Flat (NA) (89372)	2	BK	
-108	2W1AL26-17-24	WASHER, Plain (NA) (89372)	4	BK	
-109	NAS464-4-23	BOLT	2	BK	
-110	4B21B4-014	BUSHING, Spacer (NA) (89372)	4	BK	
-111	AN365-428	NUT	1	BK	
-112	2W18-416	WASHER, Flat (NA) (89372)	2	BK	
-113	AN174-11A	BOLT	1	BK	
-114	KP4R16-2	BEARING (FAF) (21335)	1	BK	
-115	209-520131-11	SUPPORT ASSEMBLY, Ram-air turbine	1	BK	
-116	KWB-4G	. BEARING (HLF) (97613)	2	BK	
-117	NAS516-1	. FITTING, Lubricator	2	BK	
-118	209-31139	FRAME ASSEMBLY, Station 39.938 air turbine door hinge RH	1	BK	
-119	4B20M-S6-008	. BUSHING, Press fit flanged (NA) (89372)	1	BK	
-120	209-31139-27	. PLATE, Station 39.938 air turbine door hinge RH frame assembly	1	BK	
-121	209-31139-21	FRAME ASSEMBLY, Station 39.938 air turbine door hinge RH	1	BK	
-122	4B20M-S6-010	. BUSHING, Press fit flanged (NA) (89372)	1	BK	
-123	209-31139-23	. PLATE, Station 39.938 air turbine door hinge RH frame assembly	1	BK	
-124	209-31149	FRAME ASSEMBLY, Station 49.375 air turbine door hinge RH	1	BK	
-125	4B20M-S6-010	. BUSHING, Press fit flanged (NA) (89372)	1	BK	
-126	209-31149-25	. PLATE, Station 49.375 air turbine door hinge RH frame assembly	1	BK	
-127	209-31149-21	FRAME ASSEMBLY, Station 49.375 air turbine door hinge RH	1	BK	
-128	4B20M-S6-008	. BUSHING, Press fit flanged (NA) (89372)	1	BK	
-129	209-31149-23	. PLATE, Station 49.375 air turbine door hinge RH frame assembly	1	BK	
-130		NO. 2 FLIGHT CONTROL AND EMERGENCY SYSTEM (see hydraulics)			

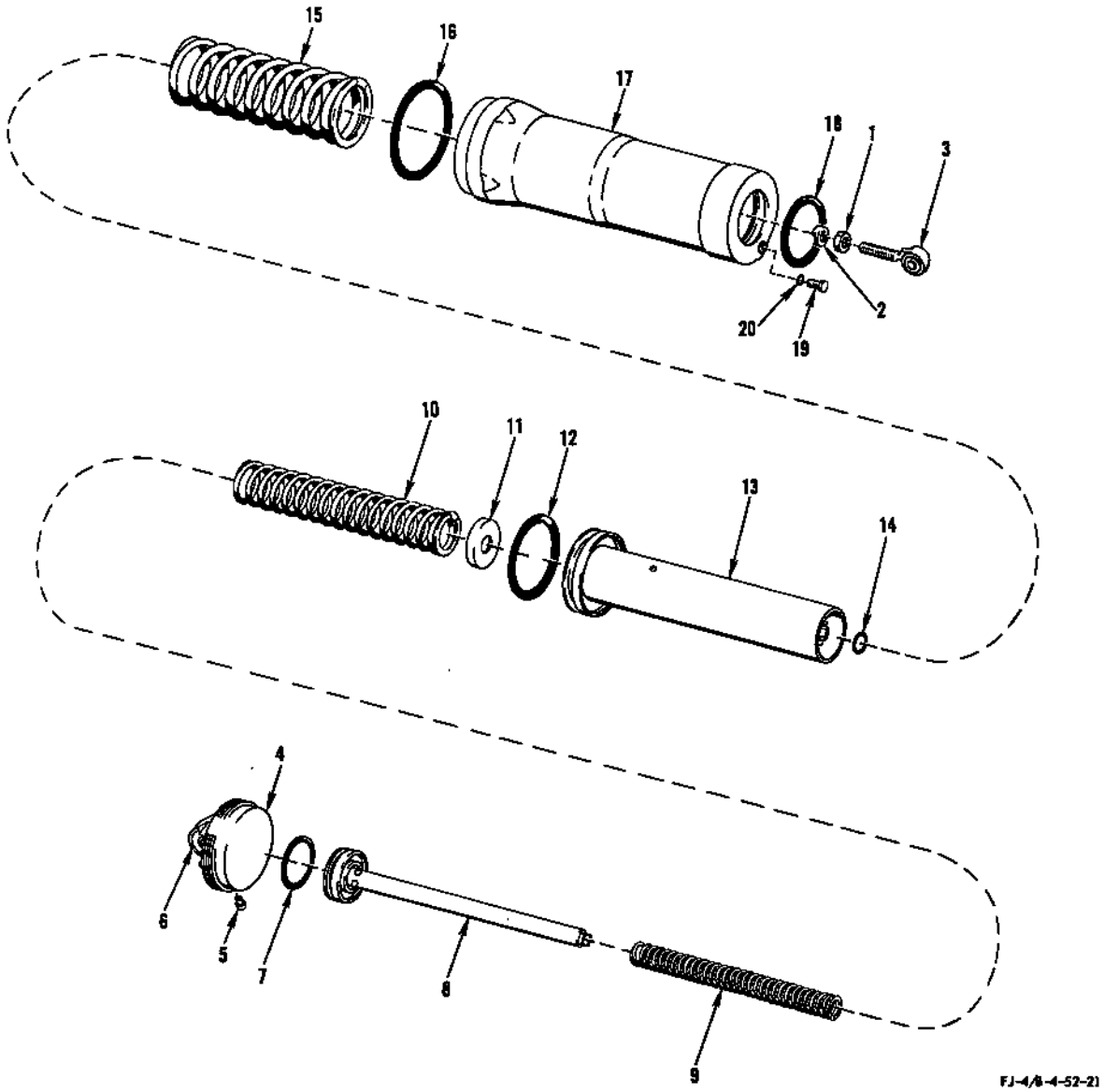

FIGURE 206 - RAM-AIR TURBINE BUNGEE ASSEMBLY - APPLICABLE TO AIRCRAFT CODED (BK)

RAM-AIR TURBINE BUNGEE ASSEMBLY - APPLICABLE TO AIRCRAFT CODED (BK)

FIGURE & INDEX NO.	PART NUMBER	1 2 3 4 5 6 7 NOMENCLATURE	UNITS PER ASSY.	USABLE ON CODE	S/C NO.
206	209-520186	BUNGEE ASSEMBLY, Ram-air turbine (superseded by 209-520186-11 for future procurement)	1	BK	
	209-520186-11	BUNGEE ASSEMBLY, Ram-air turbine (supersedes 209-520186 for future procurement)	1	BK	
-1	1N7-5A	. NUT, Check (NA) (89372)	1	BK	
-2	2W15-5	. WASHER, Lock (NA) (89372)	1	BK	
-3	209-520167	. ROD END, Ram-air turbine bungee (magnetic inspected)	1	BK	
-4	209-520184	. CAP ASSEMBLY, Ram-air turbine damping bungee	1	BK	
-5	NAS516-1	. . FITTING, Lubricator	2	BK	
-6	HASB-5	. . BEARING (HLF) (97613)	1	BK	
-7	AN6227-27	. PACKING	1	BK	
-8	209-520182	. PISTON, Ram-air turbine damping bungee (magnetic inspected)	1	BK	
-9	209-520168	. SPRING, Compression	1	BK	
-10	209-520151	. SPRING, Compression (used on 209-520186 only)	1	BK	
-11	209-520169	. SEAT, Ram-air turbine bungee upper spring	1	BK	
-12	AN6227-37	. PACKING	1	BK	
-13	209-520183	. PISTON, Ram-air turbine bungee outer	1	BK	
-14	AN6227-11	. PACKING	1	BK	
-15	209-520152	. SPRING, Compression	1	BK	
-16	AN6230-13	. GASKET	1	BK	
-17	209-520185	. HOUSING, Ram-air turbine damping bungee	1	BK	
-18	AN6227-32	. PACKING	1	BK	
-19	1P6S	. PLUG, Hydraulic (NA) (89372)	1	BK	
-20	AN6227-2	. PACKING	1	BK	

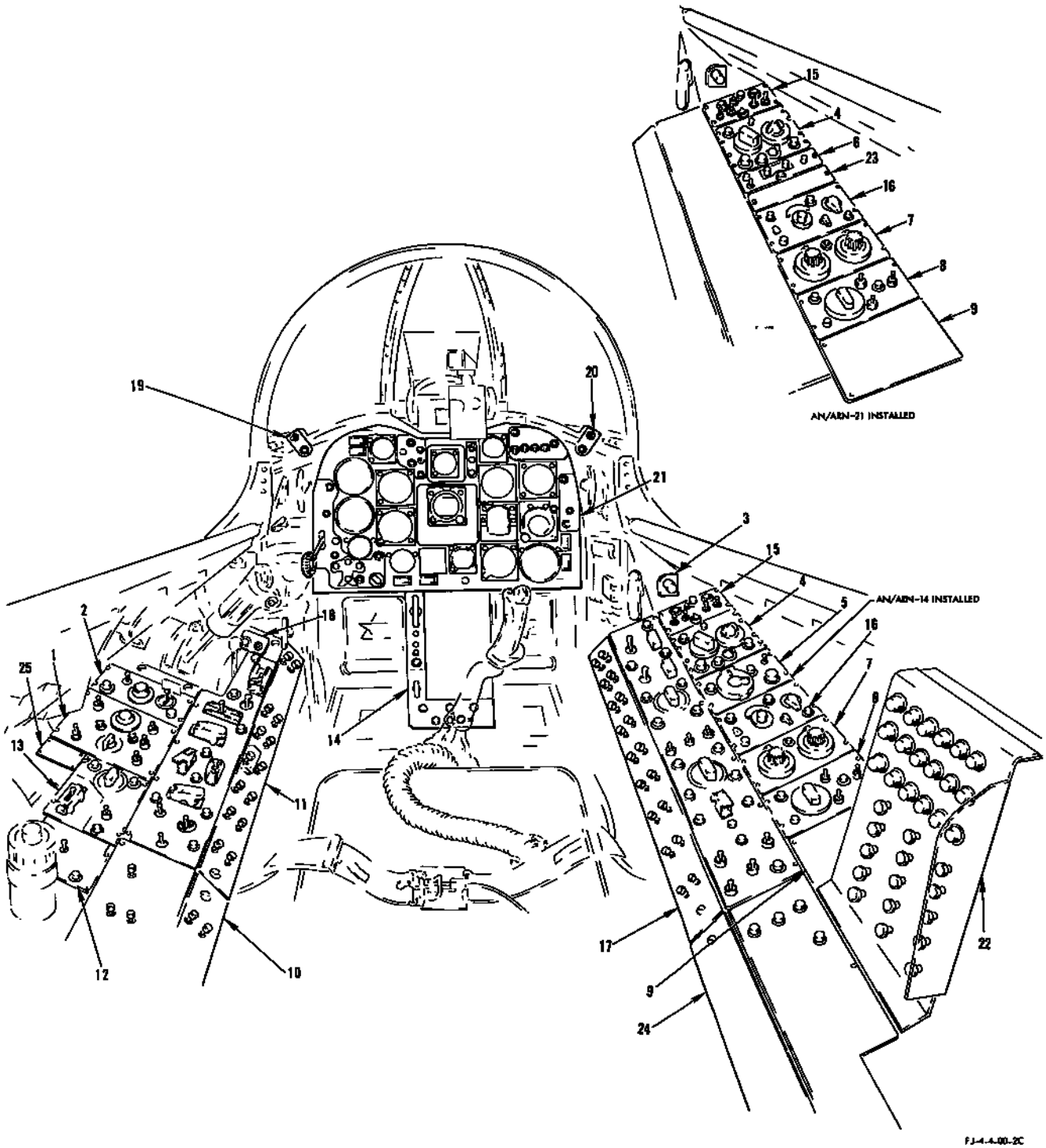

FIGURE 207 - COCKPIT PANEL ARRANGEMENT - APPLICABLE TO AIRCRAFT CODED (ET)

COCKPIT PANEL ARRANGEMENT - APPLICABLE TO AIRCRAFT CODED (ET)

FIGURE & INDEX NO.	PART NUMBER	1 2 3 4 5 6 7 NOMENCLATURE	UNITS PER ASSY.	USABLE ON CODE	S/C NO.
207-1	MK-35 MOD-3	CONTROL PANEL (GFP) (see figure 213)	1	ET	
-2	C-775/APG-30	CONTROL PANEL (GFP) (see figure 213) (for breakdown see Technical Manual AN 16-3APG130-3)	1	ET	
-3	CTSBA2126P&R5K	RANGE CONTROL (CPH) (71450) (see figure 213)	1	ET	
-4	209-71244	PANEL, ARC-27 control (rework of C1703/ARC-27A (GFP)) (see figure 209) (for breakdown see Technical Manual 12R2-2ARC27-4)	1	ET	
-5	209-71243	PANEL, ARN-14 control (rework of C-760B/A (GFP)) (see figure 210)	1	ET	
-6	C-866/ARN-21	CONTROL PANEL, AN/ARN-21 (GFP) (see figure 211) (for breakdown see Technical Manual AN 16-30ARN21-4)	1	ET	
-7	C-1272/APA-89	CONTROL PANEL, SIF (GFP) (see figure 212) (for breakdown see Technical Manual NA 16-30APA89-502)	1	ET	
-8	C-1159/APX-6B	CONTROL PANEL, IFF (GFP) (see figure 212) (for breakdown see Technical Manual NA 16-30APX6-54)	1	ET	
-9	209-71214	PANEL ASSEMBLY, RH radio console close-out (see figure 210)	1	ET	
-10	209-54249	PANEL ASSEMBLY, LH rear console (see figure 302 for complete breakdown)	1		
-11	209-54115	CONSOLE ASSEMBLY, LH forward (see figure 300 for complete breakdown)	1		
-12	209-54283	PANEL ASSEMBLY, Electric emergency transfer control complete (superseded by 209-54283-11 for future procurement) (see figure 313 for breakdown)	1	DN	
	209-54283-11	PANEL ASSEMBLY, Electric emergency transfer control complete (supersedes 209-54283 for future procurement) (see figure 313 for breakdown)	1	GY	
-13	209-54038	CONSOLE ASSEMBLY, Heat and vent control (see figure 296 for breakdown)	1	ET	
-14	209-54226	SHIELD ASSEMBLY, Center electric pedestal complete (see figure 295 for complete breakdown)	1		
-15	G-6080	CONTROL PANEL, Exterior lights (GMC) (72914) (see figure 241)	1	ET	
-16	15716-1-B	CONTROLLER, Compass (ECP) (19315) (supersedes 15716-1-A (ECP) (19315) for future procurement) (see figure 276) (for breakdown see Technical Manual NA 05-15-599)	1	ET	
-17	209-54026	CONSOLE ASSEMBLY, RH forward (see figure 305 for complete breakdown)	1		
-18	181-51129	PANEL ASSEMBLY, Pilots speed brake indicator complete (see figure 278 for complete breakdown)	1		
-19	209-51151-11	PANEL ASSEMBLY, Mach trim switch (see figure 270 for breakdown)	1	ET	
-20	209-51151-21	PANEL ASSEMBLY, Yaw damper switch (see figure 293 for breakdown)	1	ET	
-21	209-51005	PANEL ASSEMBLY, Pilots instrument complete (see figures 315 and 317 for complete breakdown)	1	ET	
-22	209-54189	PANEL ASSEMBLY, Circuit breaker and fuse cockpit RH rear (see figure 314 for complete breakdown)	1		
-23	194-71215	PANEL ASSEMBLY, C-866/ARN-21 radio control RH console close-out	1	ET	
	PF3-1/2-38	. FASTENER (DZ) (72794)	2	ET	
	PS3-1/2	. SPRING (DZ) (79794)	2	ET	
	PC3-1/2	. CUP (DZ) (72794)	2	ET	
-24	209-54458	PANEL ASSEMBLY, Pilots console RH rear (see figure 310 for breakdown)	1	ET	
-25	209-51011	PLACARD, Fuel gage capacitance value	1	HH	

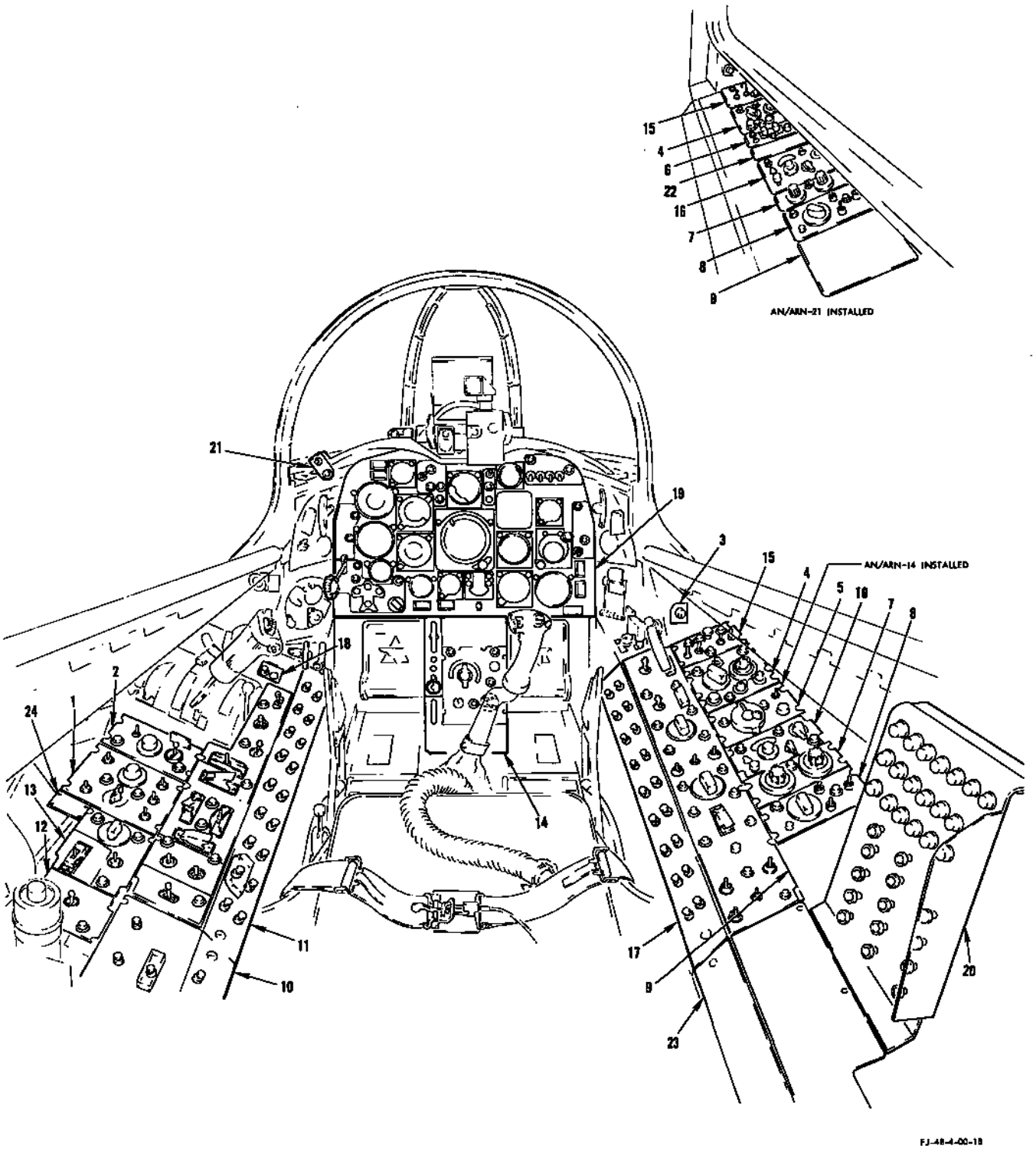

FIGURE 208 - COCKPIT PANEL ARRANGEMENT - APPLICABLE TO AIRCRAFT CODED (FR)

COCKPIT PANEL ARRANGEMENT - APPLICABLE TO AIRCRAFT CODED (FR)

FIGURE & INDEX NO.	PART NUMBER	1 2 3 4 5 6 7 NOMENCLATURE	UNITS PER ASSY.	USABLE ON CODE	S/C NO.
208-1	MK-35 MOD-3	CONTROL PANEL (GFP) (see figure 213)	1	FR	
-2	C-775/APG-30	CONTROL PANEL (GFP) (see figure 213) (for breakdown see Technical Manual AN 16-3APG30-3)	1	FR	
-3	CTSBA2126P&R5K	RANGE CONTROL (CPH) (71450) (see figure 213)	1	FR	
-4	209-71244	PANEL, ARC-27 control (rework of C1703/ARC-27A (GFP)) (see figure 209) for breakdown of C1703/ARC-27A see Technical Manual 12R2-2ARC27-4)	1	FR	
-5	209-71243	PANEL, ARN-14 control (rework of C-760B/A (GFP)) (see figure 210)	1	FR	
-6	C-866/ARN-21	CONTROL PANEL, AN/ARN-21 (GFP) (see figure 211) (for breakdown see Technical Manual AN 16-30ARN21-4)	1	FR	
-7	C-1272/APA-89	CONTROL PANEL, SIF (GFP) (see figure 212) (for breakdown see Technical Manual NA 16-30APA89-502)	1	FR	
-8	C-1159/APX-6B	CONTROL PANEL, IFF (GFP) (see figure 212) (for breakdown see Technical Manual AN 16-30APX6-54)	1	FR	
-9	209-71214	PANEL ASSEMBLY, Radio console close-out RH (see figure 210)	1	FR	
-10	209-54249	PANEL ASSEMBLY, LH rear console (see figure 302 for breakdown)	1		
-11	209-54115	CONSOLE ASSEMBLY, LH forward (see figure 301 for breakdown)	1		
-12	209-54283-11	PANEL ASSEMBLY, Electric emergency fuel transfer control complete (see figure 313 for breakdown)	1	FR	
-13	209-54038	CONSOLE ASSEMBLY, Heat and vent control (see figure 296 for breakdown)	1	FR	
-14	209-54226	SHIELD ASSEMBLY, Center electrical pedestal complete (see figure 295 for complete breakdown)	1		
-15	209-543170	CONTROL PANEL, Exterior lights (make from G-6080 (GMC) (72914) by removing ST52P (GMC) (72914) switch and installing AN3027-3)	1	FR	
-16	15716-1-A	CONTROLLER, Compass (ECP) (19315) (superseded by 15716-1-B (ECP) (19315) for future procurement) (see figure 276) (for breakdown see Technical Manual NA 05-15-599)	1	FR	
	15716-1-B	CONTROLLER, Compass (ECP) (19315) (supersedes 15716-1-A (ECP) (19315) for future procurement) (see figure 276) (for breakdown see Technical Manual NA 05-15-599)	1	FR	
-17	209-54026	CONSOLE ASSEMBLY, RH forward (see figure 306 for complete breakdown)	1		
-18	209-51197	PANEL ASSEMBLY, Take-off trim indicator complete (see figure 271 for complete breakdown)	1	FR	
-19	209-510108	PANEL ASSEMBLY, Pilots instrument complete (see figure 318 for complete breakdown)	1	FR	
-20	209-54472	PANEL ASSEMBLY, Circuit breaker and fuse RH rear complete (see figure 319 for complete breakdown)	1	FR	
-21	209-51151-31	PANEL ASSEMBLY, Mach trim switch (see figure 271 for complete breakdown)	1	FR	
-22	194-71215	PANEL ASSEMBLY, C-866/ARN-21 radio control RH close-out	1	FR	
	PF3-1/2-38	. FASTENER (DZ) (72794)	2	FR	
	PS3-1/2	. SPRING (DZ) (72794)	2	FR	
	PC3-1/2	. CUP (DZ) (72794)	2	FR	
-23	181-53175-41	PLATE ASSEMBLY, Pilots console RH rear	1	FR	
-24	209-51011	PLACARD, Fuel gage capacitance value	1	FR	

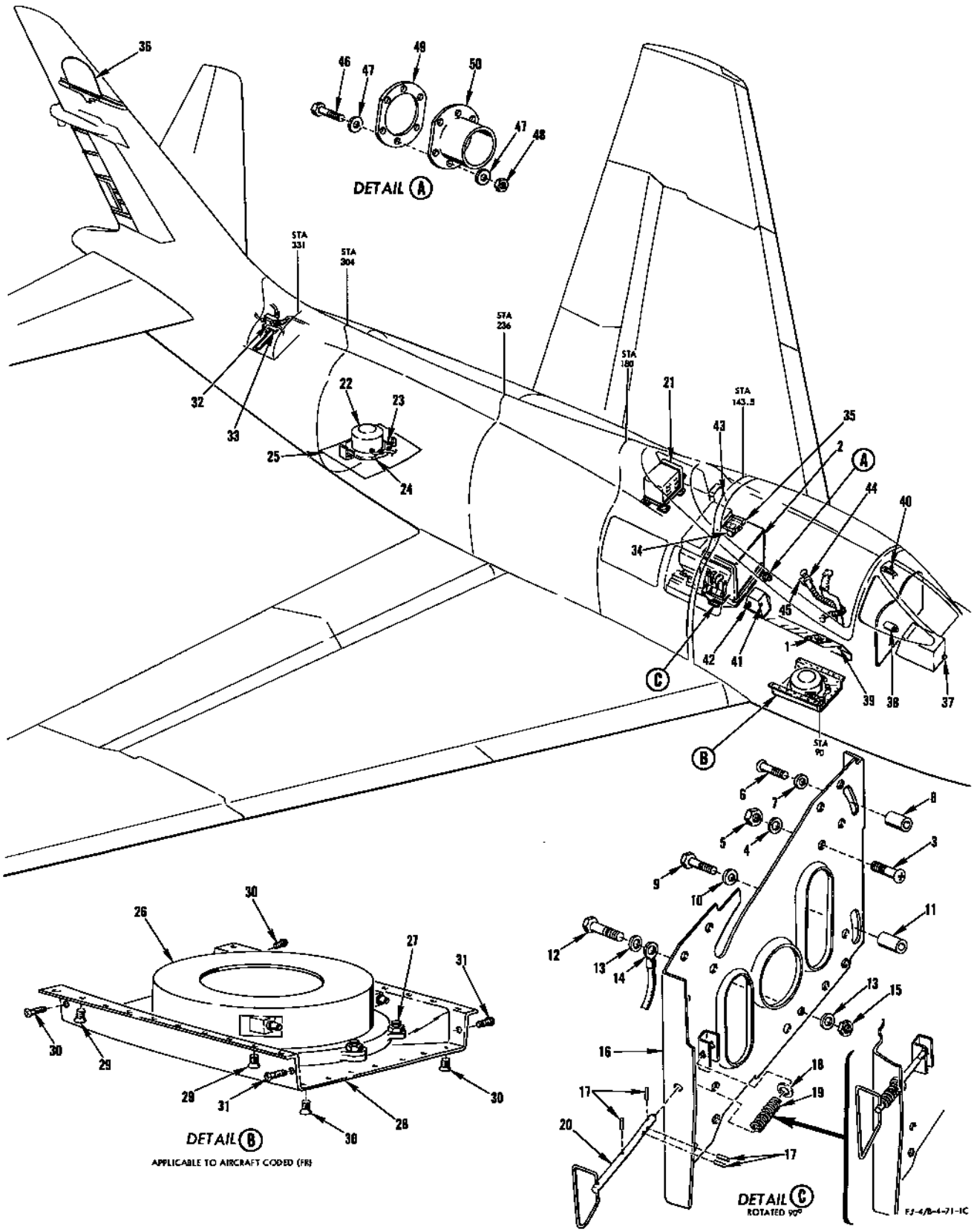

FIGURE 209 - AN/ARC-27A COMMAND AND AN/ARA-25 ADF EQUIPMENT

AN/ARC-27A COMMAND AND AN/ARA-25 ADF EQUIPMENT

FIGURE & INDEX NO.	PART NUMBER	1 2 3 4 5 6 7 NOMENCLATURE	UNITS PER ASSY.	USABLE ON CODE	S/C NO.
209-1	209-71244	PANEL, ARC-27 control (rework of C1703/ARC-27A (GFP) (C-1015/ARC-27A (GFP)) with AN3106-28-21P may be used in place of C1703/ARC-27A) (for breakdowns see Technical Manual NAVAER 16-30ARC27-501)	1		
-2	RT-178/ARC-27	RECEIVER-TRANSMITTER (GFP) (for breakdown see Technical Manual NAVAER 16-30ARC27-501)	1		
	MT822A/ARC-27	MOUNT (GFP) (MT822/ARC-27 may be used as an alternate) (GFP) (for breakdowns see Technical Manual NAVAER 16-30ARC27-501)	1		
-3	AN509-8R8	SCREW	16		
-4	2W18-8L	WASHER, Flat (NA) (89372)	16		
-5	AN365-832	NUT	16		
-6	AN509-416R13	SCREW	1		
-7	181-71426	WASHER, AN/ARC-27A radio submounting pan hold-down	1		
-8	NAS42C8-4	SPACER	1		
-9	AN4-5A	BOLT	2		
	AN4-6A	BOLT	2		
-10	2W1C17-28-63	WASHER, Plain (NA) (89372)	4		
-11	NAS42C8-7	SPACER	4		
-12	AN520-10R8	SCREW	2		
-13	2W1AL14-14-32	WASHER, Plain (NA) (89372)	3		
-14	AN749-3-6	JUMPER	1		
-15	AN365-1032	NUT	1		
-16	209-71425	PAN ASSEMBLY, AN/ARC-27 radio receiver-transmitter submounting	1		
-17	59-012-062-0375	. ROLLPIN (EN) (72962)	4		
-18	2W1AL17-11-64	. WASHER, Plain (NA) (89372)	1		
-19	209-31412	. SPRING, Compression (supersedes 153-54264-5 for future procurement) (153-54264-5 not to be used for replacement)	1		
-20	181-71424	. PIN ASSEMBLY, AN/ARC-27 radio submounting pan retainer	1		
-21	AM-608/ARA-25	AMPLIFIER (GFP) (for breakdown see Technical Manual AN 16-30ARA25-4)	1		
	MT-1043/ARA-25	MOUNT (GFP) (for breakdown see Technical Manual AN 16-30ARA25-4)	1		
	ATTACHING PARTS				
	AN520-10R8	SCREW	8		
	2W18-10	WASHER, Flat (NA) (89372)	8		
	---*---				
-22	209-71245	ANTENNA, ARA-25 direction finding (rework of AS-578/ARA-25 (GFP)) (for breakdown of AS-578/ARA-25 see Technical Manual AN 16-30ARA25-4)	1	ET	
-23	AN3-7A	BOLT	3	BR	
	AN3-7A	BOLT	6	FX	
	2W18-10	WASHER, Flat (NA) (89372)	3	BR	
	2W18-10	WASHER, Flat (NA) (89372)	6	FX	
-24	209-71615	FAIRING ASSEMBLY, Radio AN/ARA-25 fuselage station 304.5 to station 323.125 antenna	1	ET	
-25	181-71629-11	COVER, AN/ARA-25 radio antenna fuselage station 304.5 to station 323.125	1	ET	
	ATTACHING PARTS				
	AN507-1032R8	SCREW	27	ET	
	2W18-10M	WASHER, Flat (NA) (89372)	27	ET	
	---*---				
-26	209-71245-11	ANTENNA, ARA-25 direction finding (rework of AS-578A/ARA-25 (GFP) (for breakdown of AS-578A/ARA-25 see Technical Manual AN 16-30ARA25-4)	1	KX	
	209-71245-21	ANTENNA, ARA-25 direction finding (rework of AS-578A/ARA-25 (GFP)) (for breakdown of AS-578A/ARA-25 see Technical Manual AN 16-30ARA25-4)	1	KY	
-27	AN507-10R17	SCREW	6	FR	
	2W18-10M	WASHER, Flat (NA) (89372)	12	FR	
	AN365-1032	NUT	6	FR	
-28	209-31348	FAIRING ASSEMBLY, Fuselage station 90 to station 108.156 AN/ARA-25 antenna	1	FR	
-29	AN509-10R10	SCREW	20	FR	
-30	AN509-10R11	SCREW	15	FR	
-31	AN509-10R12	SCREW	2	FR	
-32	RE-120/ARA-25	RELAY (antenna transfer) (GFP) (for breakdown see Technical Manual AN 16-30ARA25-4)	1	ET	
-33	MT-1042/ARA-25	MOUNT (GFP) (for breakdown see Technical Manual AN 16-30ARA25-4)	1	ET	
	ATTACHING PARTS				
	AN515-8R6	SCREW	4	ET	
	2W18-8L	WASHER, Flat (NA) (89372)	4	ET	
	AN363C832	NUT	4	ET	
	---*---				
-34	RE-120/ARA-25	RELAY (antenna transfer) (GFP) (for breakdown see Technical Manual AN 16-30ARA25-4)	1	FR	
-35	MT-1042/ARA-25	MOUNT (GFP) (for breakdown see Technical Manual AN 16-30ARA25-4)	1	FR	
-36	Type 312	DUPLEX ANTENNA (DOMA) (85226)	1		
	ATTACHING PARTS				
	A520-10R10	SCREW	14		
	2W18-10M	WASHER, Flat (NA) (89372)	14		
	---*---				
	209-54226	SHIELD ASSEMBLY, Center electrical pedestal complete (see figure 295 for complete breakdown)	1		
-37	AN3303-1	. RELAY (RMI indicator change-over)	1		
	209-51005	PANEL ASSEMBLY, Pilots instrument complete (see figure 315 for complete breakdown)	1		

AN/ARC-27A COMMAND AND AN/ARA-25 ADF EQUIPMENT

FIGURE & INDEX NO.	PART NUMBER	1 2 3 4 5 6 7 NOMENCLATURE	UNITS PER ASSY.	USABLE ON CODE	S/C NO.
209-	209-510108	PANEL ASSEMBLY, Pilots instrument complete (see figure 318 for complete breakdown)	1		
-38	MS28027-1	. INDICATOR (radio magnetic course) (GFP)	1		
	209-54026	CONSOLE ASSEMBLY, RH forward (see figures 305 and 306 for complete breakdown)	1		
-39	90	. CIRCUIT BREAKER (AN/ARA-25 radio) (MEH) (76374)	1		
	50032	QUADRANT ASSEMBLY, Engine power control (RHW) (80477) (for breakdown see Technical Manual NA 03-40EA-506) (see Surface and Secondary Controls)	1	LE	501
	50032-1	QUADRANT ASSEMBLY, Engine power control (RHW) (80477) (for breakdown see Technical Manual NA 03-40EA-506) (see Surface and Secondary Controls)	1	KY	
-40	138106	. SNAP SWITCH (microphone) (UCI) (78947)	1		
	209-54189	PANEL ASSEMBLY, Circuit breaker and fuse cockpit RH rear (see figure 314 for complete breakdown)	1		
	209-54472	PANEL ASSEMBLY, Circuit breaker and fuse cockpit RH rear complete (see figure 319 for complete breakdown)	1		
-41	312001	. FUSE (radio magnetic course indicator) (LTF) (75915)	1	LE	
	312002	. FUSE (radio magnetic course indicator) (LTF) (75915)	1	KY	
-42	AN3311-2	. RELAY (IFF and UHF transfer)	1		
	209-54170	PANEL ASSEMBLY, Circuit breaker station 156 LH side complete (see figure 303 for complete breakdown)	1		
	209-540110	PANEL ASSEMBLY, Circuit breaker station 156 LH side (see figure 304 for complete breakdown)	1		
-43	94	. CIRCUIT BREAKER (AN/ARC-27A radio) (MEH) (76374)	1	ET	
	MS25017-25	. CIRCUIT BREAKER (AN/ARC-27A radio)	1	FR	
-44	D100-528	TUBE ASSEMBLY, Oxygen breathing and radio (DARL) (83452) (interchangeable with AT208-2 (Aero-Tube Co)) (98672) (see Oxygen System)	1		
-45	U-61/U	. JACK, Microphone and headset (furnished as part of D100-528 (DARL) (83452) tube assembly)	1		
-46	AN515-6R8	SCREW	6		
-47	2W18-6L	WASHER, Flat (NA) (89372)	12		
-48	AN365-632	NUT	6		
-49	181-71251-3	GASKET, Radio compass loop cable and sense antenna cord pressure seal	1		
-50	181-71250-3	TUBE, Radio compass loop cable and sense antenna cord pressure seal	1		

NOTE: The above information has been compiled from 209-71002, Page 11 (F change)

AN/ARN-14E NAVIGATIONAL SET EQUIPMENT

FIGURE & INDEX NO.	PART NUMBER	1 2 3 4 5 6 7 NOMENCLATURE	UNITS PER ASSY.	USABLE ON CODE	S/C NO.
210-1	209-71243	PANEL, ARN-14 control (reworked C-760B/A (GFP))	1		151
-2	209-71214	PANEL ASSEMBLY, RH radio console close-out	1		
-3	209-71228-11	SUPPORT ASSEMBLY, ARN-14 front antenna fuselage station 113.5 LH	1		151
-4	209-71228-12	SUPPORT ASSEMBLY, ARN-14 front antenna fuselage station 113.5 RH	1		151
	ATTACHING PARTS				
-5	AN4-6A	BOLT	6		151
	2W18-416M	WASHER, Flat (NA) (89372)	6		151
	---*---				
-6	AN520-10R8	SCREW	1		151
	2W18-10M	WASHER, Flat (NA) (89372)	2		151
	AN365-1032	NUT	1		151
-7	209-71226	SUPPORT ASSEMBLY, AN/ARN-14 antenna and canopy switch mounting	1		151
-8	209-71237	BALUN ASSEMBLY, Radio AN/ARN-14 antenna complete	1		151
	ATTACHING PARTS				
	AN503-6-4	SCREW	4		151
	---*---				
-9	209-71222	. FASTENER, ARN-14 antenna element eye bolt	2		151
-10	2W18-10M	. WASHER, Flat (NA) (89372)	2		151
-11	AN365-1032	. NUT	2		151
-12	209-71225-2	. ELEMENT ASSEMBLY, AN/ARN-14 antenna RH	1		151
	209-71225-1	. ELEMENT ASSEMBLY, AN/ARN-14 antenna LH	1		151
-13	209-71231	. INSERT, AN/ARN-14 antenna element supporting	2		151
-14	AN936B416	. WASHER	2		151
-15	AN341-416	. NUT	2		151
-16	AN515-6R5	. SCREW	2		151
-17	AN936B6	. WASHER	2		151
-18	CM15C300J	. CAPACITOR (CLD) (14655) (MIL-C-5A)	1		151
-19	209-71229	. ELEMENT, AN/ARN-14 antenna balun	2		151
	209-71233	. FEEDER, AN/ARN-14 antenna balun	1		151
-20	209-71232	. SUPPORT, AN/ARN-14 balun element center	1		151
-21	209-71227	. SUPPORT, AN/ARN-14 rear antenna	1		151
-22	209-71236	. CASE ASSEMBLY, AN/ARN-14 antenna balun weld	1		151
-23	209-71230	. PLATE, AN/ARN-14 antenna balun cover	1		151
-24	AN503-6-4	. SCREW	6		151
-25	2W18-6L	. WASHER, Flat (NA) (89372)	6		151
	194-71461-11	JUNCTION BOX ASSEMBLY, Radio fuselage station 142 complete	1		
	ATTACHING PARTS				
	AN520-10R8	SCREW	2		
	2W1AL14-14-16	WASHER, Plain (NA) (89372)	4		
	AN365-1032	NUT	2		
	---*---				
-26	194-71462-11	. JUNCTION BOX ASSEMBLY, Radio fuselage station 142	1		
-27	194-71463	. RESISTOR ASSEMBLY (used with both AN/ARN-14E and AN/ARN-21 radio)			
	RC21AE511K	. . RESISTOR (IRC) (75042) (500 ohms 1/2 watt) (JAN-R-11) (RC20GF511J (IRC) (75042), MS35043-80 or RC21AE511J (IRC) (75042) may be used as alternates)	1		
-28	194-71463	. RESISTOR ASSEMBLY (used with AN/ARN-14E radio only)	1		151
	RC21AE511K	. . RESISTOR (IRC) (75042) (500 ohms 1/2 watt) (JAN-R-11) (RC20GF511J (IRC) (75042), MS35043-80 or RC21AE511J (IRC) (75042) may be used as alternates)	1		151
	194-71467	. RESISTOR ASSEMBLY (used with AN/ARN-21 radio only)	1		151
	RC20GF102K	. . RESISTOR (IRC) (75042) (1000 ohms 1/2 watt) (MIL-R-11A) (RC20GF102J (IRC) (75042) may be used as an alternate)	1		151
-29	C-3519	. RELAY (COEL) (71607)	1		
	2W18-6	. WASHER, Flat (NA) (89372)	3		
	AN365-632	. NUT	3		
-30	S17377	. CAPACITOR (SPR) (56289)	1		
-31	S17378	. CAPACITOR (SPR) (56289)	1		
-32	R-540/ARN-14C	RECEIVER (GFP) (for breakdown see Technical Manual TO 16-30ARN14-8)	1		151
	MT-627A/ARN-14	MOUNT (GFP) (for breakdown see Technical Manual TO 16-30ARN14-8)	1		151
	ATTACHING PARTS				
	AN520-10R12	SCREW	14		151
	2W18-10	WASHER, Flat (NA) (89372)	14		151
	---*---				
-33	DY-84/ARN-14	DYNAMOTOR (GFP) (for breakdown see Technical Manual AN 16-30ARN14-4)	1		151
	MT-962/ARN-14	MOUNT (GFP) (for breakdown see Technical Manual AN 16-30ARN14-4)	1		151
	194-71456	SUPPORT ASSEMBLY, Radio dynamotor DY-84/ARN-14 (fwd)	1		151
	194-71457	SUPPORT ASSEMBLY, Radio dynamotor DY-84/ARN-14 (aft)	1		151
	ATTACHING PARTS				
	AN520-10R8	SCREW	4		151
	AN520-10R7	SCREW	4		151
	2W1AL14-14-16	WASHER, Plain (NA) (89372)	8		151
	---*---				
	209-51005	PANEL ASSEMBLY, Pilots instrument complete (see figures 315 and 317 for complete breakdown)	1		
	209-510108	PANEL ASSEMBLY, Pilots instrument complete (see figure 318 for complete breakdown)	1		
-34	MS28027-1	. INDICATOR (radio magnetic course) (GFP)	1		
-35	ID249B/ARN	. INDICATOR (course) (GFP)	1		
-36	209-54189	PANEL ASSEMBLY, Circuit breaker and fuse cockpit RH rear (see figure 314 for complete breakdown)	1		
	209-54472	PANEL ASSEMBLY, Circuit breaker and fuse cockpit RH rear (see figure 319 for complete breakdown)	1		

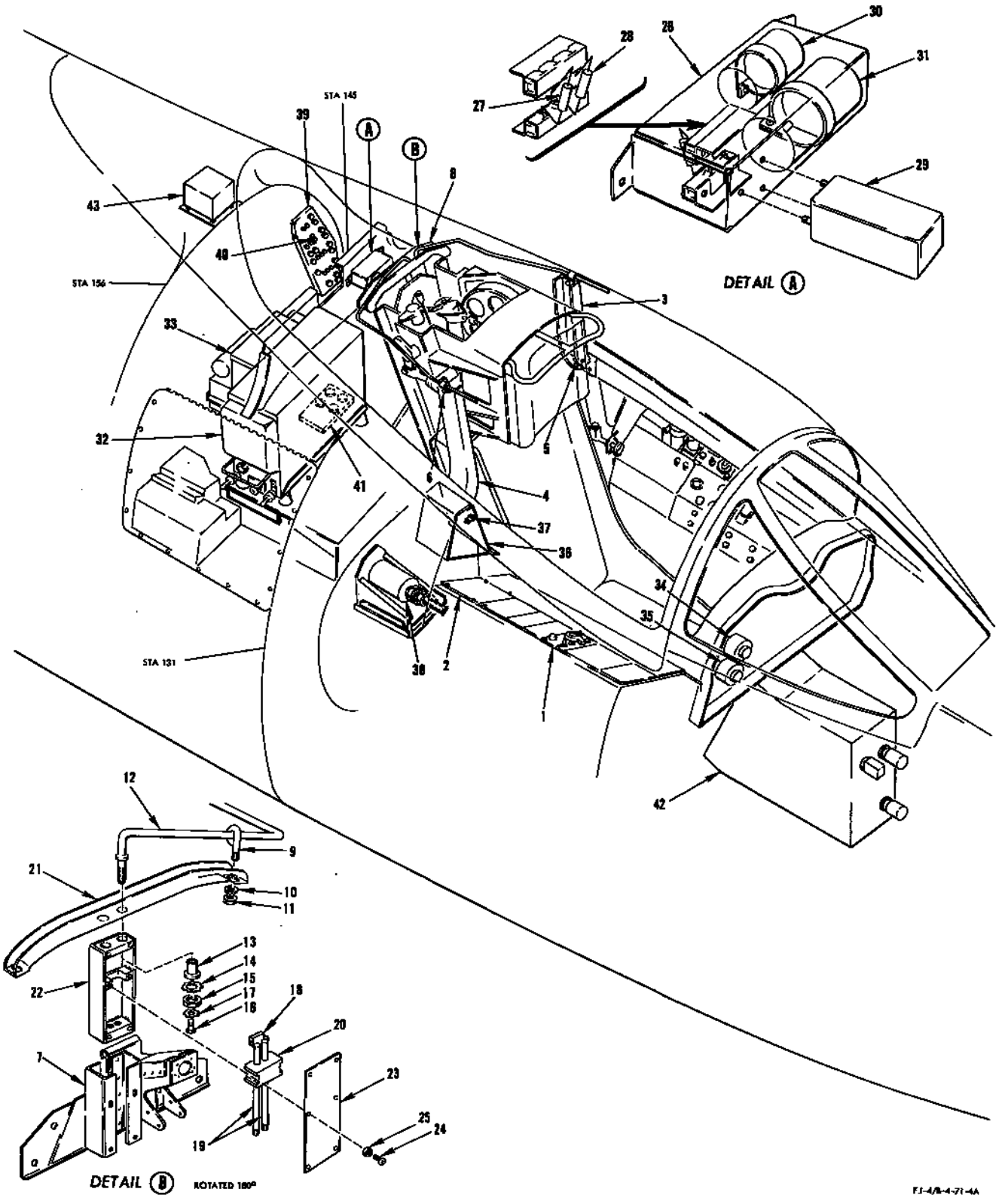

FIGURE 210 - AN/ARN-14E NAVIGATIONAL SET EQUIPMENT

A N/ARN-14E NAVIGATIONAL SET EQUIPMENT

FIGURE & INDEX NO.	PART NUMBER	1 2 3 4 5 6 7 NOMENCLATURE	UNITS PER ASSY.	USABLE ON CODE	S/C NO.
210-37	312001	. FUSE (radio magnetic course indicator) (LTF) (75915)	1	LE	
	312002	. FUSE (radio magnetic course indicator) (LTF) (75915)	1	KY	
-38	ID251/ARN-14	INDICATOR (azimuth) (GFP) (see figure 276 for installation) (for breakdown see Technical Manual AN 16-35ID251-4)	1		151
-39	209-54170	PANEL ASSEMBLY, Circuit breaker station 156 LH side complete (see figure 303 for complete breakdown)	1		
	209-540110	PANEL ASSEMBLY, Circuit breaker station 156 LH side complete (see figure 304 for complete breakdown)	1		
-40	91	. CIRCUIT BREAKER (AN/ARN-14 radio) (MEH) (76374)	1	ET	151
	MS25017-10	. CIRCUIT BREAKER (AN/ARN-14 radio)	1	FR	151
-41	194-71465	PANEL ASSEMBLY, RT220/ARN-21 radio plug stowage (remove upon installation of AN/ARN-21)	1		151
	ATTACHING PARTS				
	AN515-4R7	SCREW	4		151
	AN500A4-7	SCREW	4		151
	2W18-4L	WASHER, Flat (NA) (89372)	16		151
	AN365-440	NUT	8		151
	---*---				
-42	209-54226	SHIELD ASSEMBLY, Center electrical pedestal (see figure 295 for complete breakdown)	1		
	RW30F450	. RESISTOR (MIL-R-26C) (see figure 295 for attaching parts)	1		
-43	16010-1-B	COUPLER, Compass (ECP) (19315) (supersedes 16010-1-A (ECP) (19315) for future procurement) (for breakdown of 16010-1-A (ECP) (19315) see Technical Manual NA 05-15-601)	1		
	ATTACHING PARTS				
	AN520-10R10	SCREW	4		
	2W18-10L	WASHER, Flat (NA) (89372)	4		
	---*---				

NOTE: The above information has been compiled from 209-71002, Page 12 (F change)

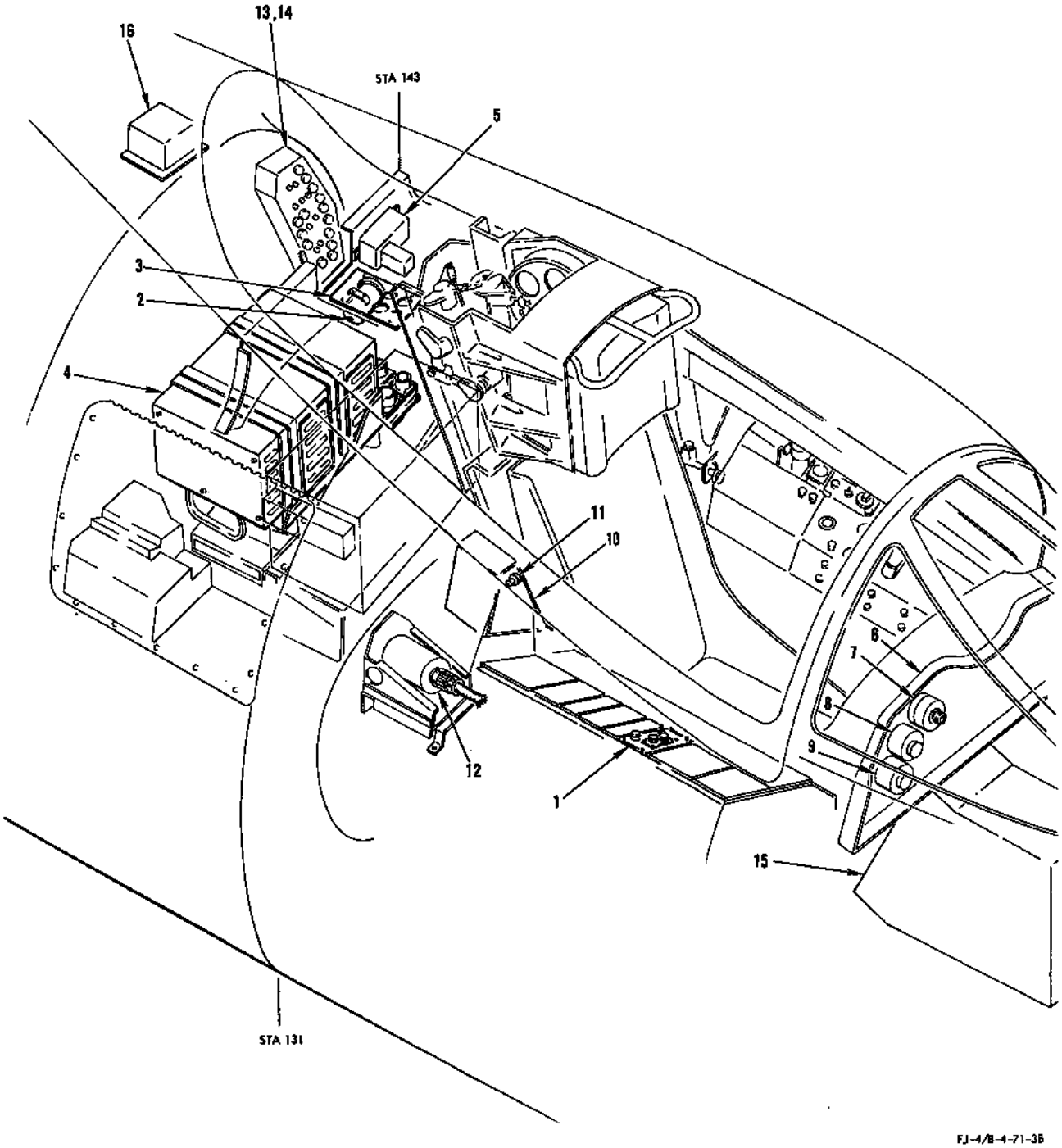

FIGURE 211 - AN/ARN-21 NAVIGATIONAL EQUIPMENT

AN/ARN-21 NAVIGATIONAL EQUIPMENT

FIGURE & INDEX NO.	PART NUMBER	1 2 3 4 5 6 7 NOMENCLATURE	UNITS PER ASSY.	USABLE ON CODE	S/C NO.
211-1	C-866/ARN-21	CONTROL PANEL (GFP) (for breakdown see Technical Manual AN16-30ARN21-4)	1		151
-2	CV-279/ARN	PHASE DETECTOR (GFP) (for breakdown see Technical Manual AN16-30ARN21-4)	1		151
	ATTACHING PARTS				
	AN509-10R9	SCREW	2		151
	2W1AL14-14-40	WASHER, Plain (NA) (89372)	2		151
	AN365-1032	NUT	2		151
	---*---				
-3	209-71418	PLATE ASSEMBLY, CV-279/ARN-21 mounting	1		151
	ATTACHING PARTS				
	AN520-10R8	SCREW	4		151
	2W1AL14-14-32	WASHER, Plain (NA) (89372)	4		151
	---*---				
-4	RT-220/ARN-21	RECEIVER-TRANSMITTER (GFP) (for breakdown see Technical Manual AN16-30ARN21-4)	1		151
	MT-928/ARN-21	MOUNT (GFP) (for breakdown see Technical Manual AN16-30ARN21-4)	1		151
	ATTACHING PARTS				
	AN515-8R12	SCREW	13		151
	2W18-8L	WASHER, Plain (NA) (89372)	13		151
	---*---				
-5	194-71461-11	JUNCTION BOX ASSEMBLY (see figure 210 for complete breakdown)	1		
	TYPE 312	DUPLEX ANTENNA (DOMA) (85226) (see figure 209)	1		
-6	209-51005	PANEL ASSEMBLY, Complete pilots instrument (see figure 315 for complete breakdown)	1		
	209-510108	PANEL ASSEMBLY, Pilots instrument (see figure 318 for complete breakdown)	1		
-7	ID310/ARN-21	. INDICATOR (range) (GFP) (for breakdown see Technical Manual NAVAER 16-35ID310-502)	1		151
-8	MS28027-1	. INDICATOR (radio magnetic course) (GFP)	1		
-9	ID-249B/ARN	. INDICATOR (course) (GFP) (interchangeable with ID351A/ARN and ID387/ARN)	1		
-10	209-54189	PANEL ASSEMBLY, Circuit breaker and fuse cockpit RH rear (see figure 314 for complete breakdown)	1		
	209-54472	PANEL ASSEMBLY, Circuit breaker and fuse cockpit RH rear (see figure 319 for complete breakdown)	1		
-11	312001	. FUSE (radio magnetic course indicator) (LTF) (75915)	1	LE	
	312002	. FUSE (radio magnetic course indicator) (LTF) (75915)	1	KY	
-12	ID307/ARN-21	INDICATOR (Azimuth) (GFP) (see figure 275 for installation) (for breakdown see Technical Manual NAVAER 16-35ID307-502)	1		151
-13	209-54170	PANEL ASSEMBLY, Circuit breaker station 156 LH side complete (see figure 303 for complete breakdown)	1		
	90	. CIRCUIT BREAKER (AN/ARN-21 radio) (MEH) (76374)	1	ET	
	312005	. FUSE (AN/ARN-21 radio phase A) (LTF) (75915)	1	ET	
	312001	. FUSE (AN/ARN-21 radio phase C) (LTF) (75915)	1	ET	
-14	209-540110	PANEL ASSEMBLY, Circuit breaker station 156 LH side complete (see figure 304 for complete breakdown)	1		
	MS25017-5	. CIRCUIT BREAKER (AN/ARN-21 radio)	1	FR	
	312001	. FUSE (AN/ARN-21 radio phase A) (LTF) (75915)	1	FR	
	312005	. FUSE (AN/ARN-21 radio phase B) (LTF) (75915)	1	FR	
-15	209-54226	SHIELD ASSEMBLY, Center electrical pedestal (see figure 295 for complete breakdown)	1		
	RW30F450	. RESISTOR (MIL-R-26C) (see figure 295 for attaching parts)	1		
-16	16010-1-B	COUPLER, Compass (ECP) (19315) (supersedes 16010-1-A (ECP) (19315) for future procurement) (for breakdown of 16010-1-A see Technical Manual NA 05-15-601)	1		
	ATTACHING PARTS				
	AN520-10R10	SCREW	4		
	2W18-10L	WASHER, Flat (NA) (89372)	4		
	---*---				

NOTE: The above information has been compiled from 209-71002, page 12 (G change)

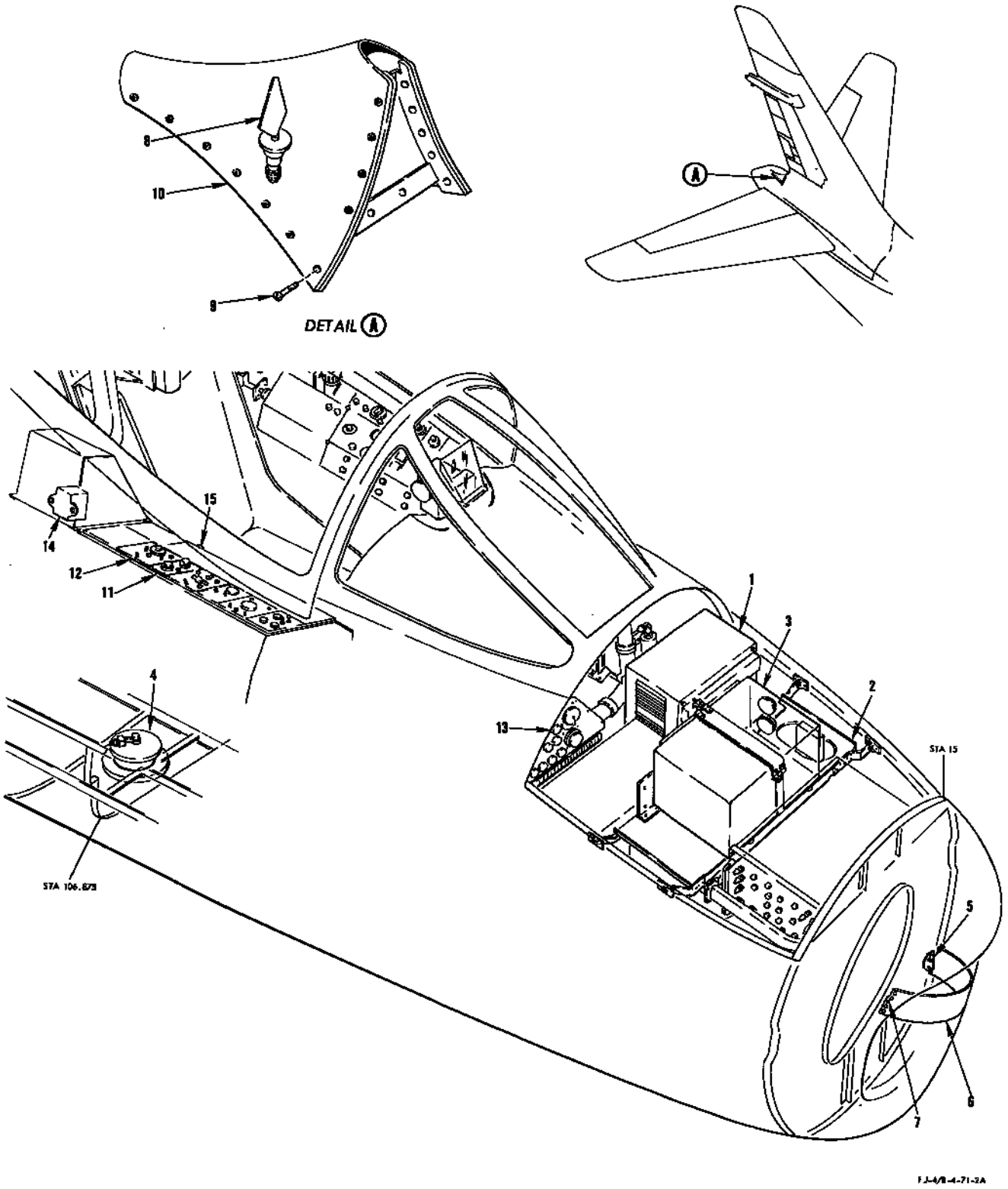

FIGURE 212 - AN/APX-6B IFF AND AN/APA-89 SIF EQUIPMENT

AN/APX-6B IFF AND AN/APA-89 SIF EQUIPMENT

FIGURE & INDEX NO.	PART NUMBER	1 2 3 4 5 6 7 NOMENCLATURE	UNITS PER ASSY.	USABLE ON CODE	S/C NO.
212-1	RT-82A/APX-6	RECEIVER-TRANSMITTER (GFP) (RT-82B/APX-6 (GPF) and RT-82C/APX-6 (GFP) may be used as alternates) (for breakdown see Technical Manual AN 16-30APX-54)	1		
	MT-362A/A	MOUNT (GFP) (for breakdown see Technical Manual AN 16-30APX6-54)	1		
	ATTACHING PARTS				
	AN515-8R7	SCREW	15		
	2W18-8L	WASHER, Flat (NA) (89372)	15		
	---*---				
-2	194-71137-21	SHELF ASSEMBLY, Radio-Radar	1	DZ	
	194-71137-31	SHELF ASSEMBLY, Radio-Radar	1	HB	
	194-71137-51	SHELF ASSEMBLY, Radio-Radar	1	FR	
	ATTACHING PARTS				
	AN395-17	PIN (RH side)	2		
	2W18-516	WASHER, Flat (NA) (89372)	4		
	AN520-10R8	SCREW	1		
	2W1AL14-14-16	WASHER, Plain (NA) (89372)	2		
	AN365-1032	NUT	1		
	---+---				
	BL-CL-5-0.500R	. BALL-LOK PIN (D.W. Price Corp) (97978)	2		
	5R10	. RING, Chain retainer (NA) (89372)	2		
	2W18-4	. WASHER, Flat (NA) (89372)	2		
	9C1-3-5	. CHAIN, Safety (NA) (89372)	2	QM	
	9C1-3-3	. CHAIN, Safety (NA) (89372)	2	QN	
-3	KY-81/APA-89	UNIT (GFP) (for breakdown see Technical Manual NA 16-30APA89-502)	1		
	12555-1A	MOUNTING BASE ASSEMBLY (BLC) (81860)	1		
	ATTACHING PARTS				
	AN500A8-4	SCREW	4		
	2W1AL12-12-16	WASHER, Plain (NA) (89372)	4		
	AN936A8	WASHER (install between isolators and bonding strap or shelf)	4		
	---+---				
-4	AT-234/APX	ANTENNA (WAN) (80203)	1	J	
	1305.126	ANTENNA (DOMA) (85226)	1	HQ	
	AN507-832R8	SCREW	12	ET	
-5	209-71127	ANTENNA ASSEMBLY, L-Band dipole APX-6	1	FR	
	AN520-10R8	SCREW	3	FR	
	2W18-10M	WASHER, Flat (NA) (89372)	3	FR	
-6	209-71129	RADOME ASSEMBLY, Dipole antenna forward nose	1	FR	
	ATTACHING PARTS				
-7	AN509-10R11	SCREW	30	FR	
	AN509-10R12	SCREW	1	FR	
	F1934-1032-2	NUT PLATE (KNM) (75237)	31	FR	
	---*---				
-8	209-71622	ANTENNA ASSEMBLY, L-Band recessed stub APX-6	1	FR	
-9	AN507-1032R8	SCREW	32	FR	
	3600-02	NUT PLATE (NUS) (80539)	22	FR	
-10	209-71622-7	. COVER, L-Band recessed stub APX-6 antenna assembly (glass fabric) (see Aft Fus-Structure)	1	FR	
-11	C1272/APA-89	CONTROL PANEL (GFP) (for breakdown see Technical Manual NA 16-30APA89-502)	1		
-12	C1159/APX-6B	CONTROL PANEL (GFP) (for breakdown see Technical Manual AN 16-30APX6-54)	1		
	209-74150	PANEL ASSEMBLY, Radar test receptacle and fuse (see figure 214 for complete breakdown)	1		
-13	312005	. FUSE(AN/APX-6B) (LTF) (75915)	1		
	209-54189	PANEL ASSEMBLY, Circuit breaker and fuse cockpit RH rear (see figure 314 for complete breakdown)	1		
	209-54472	PANEL ASSEMBLY, Circuit breaker and fuse cockpit RH rear (see figure 319 for complete breakdown)	1	FR	
-14	AN3311-2	. RELAY (IFF and UHF transfer)	1		
	209-54026	CONSOLE ASSEMBLY, RH forward (see figure 305 for complete breakdown)	1		
-15	90	. CIRCUIT BREAKER (AN/APX-6B) (MEH) (76374)	1		

NOTE: The above information has been compiled from 209-71002, Page 13 (H change)

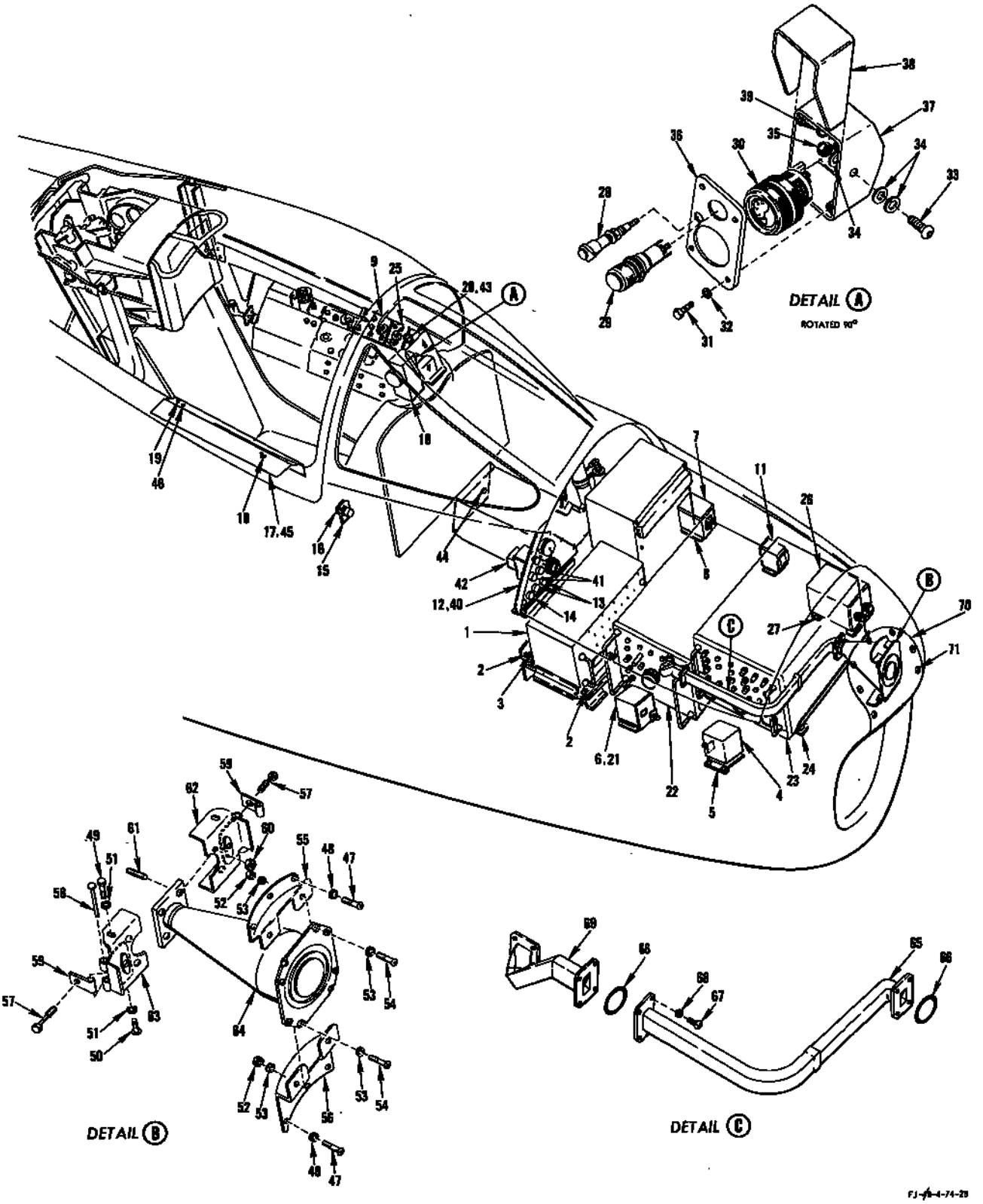

FIGURE 213 - MK-16 MOD-1 AFCS AND AN/APG-30A GUN RANGING RADAR EQUIPMENT

MK-16 MOD-1 AFCS AND AN/APG-30A GUN RANGING RADAR EQUIPMENT

FIGURE & INDEX NO.	PART NUMBER	1 2 3 4 5 6 7	NOMENCLATURE	UNITS PER ASSY.	USABLE ON CODE	S/C NO.
213			MK-16 MOD-1 AFCS RADAR SYSTEM			
-1	MK-86 MOD-0	.	COMPUTER (GFP) (for list of replaceable parts see Technical Manual NAVAER 11-70HB-504)	1		
			ATTACHING PARTS			
-2	AN3-6A	.	BOLT	4		
	2W18-10	.	WASHER, Flat (NA) (89372)	4		
-3	AN3-10A	.	BOLT	2		
	NAS43DD3-12A	.	SPACER (use under bolthead)	2		
	2W18-10	.	WASHER, Flat (NA) (89372) (use one under bolthead, one under nut)	4		
	NAS43DD3-6A	.	SPACER (use under nut)	2		
	AN365-1032	.	NUT	2		
	---*---					
-4	MK-87 MOD-0	.	RANGE RATE COMPUTER (GFP) (for list of replaceable parts see Technical Manual NAVAER 11-70HB-504)	1		
			ATTACHING PARTS			
	AN520-10R12	.	SCREW	2		
	AN509-10R10	.	SCREW	2		
	2W18-10M	.	WASHER, Flat (NA) (89372) (use under inboard screw head)	2		
	2W1AL14-16-125	.	WASHER, Plain (NA) (89372) (use between flange and web-inboard)	2		
-5	181-74110	.	BRACKET ASSEMBLY, MK-87 computer mounting (outboard)	1		
	---*---					
-6	MK-25 MOD-0	.	RANGE UNIT (GFP) (MK-25 MOD-1 (GFP) may be used as an alternate) (for list of replaceable parts see Technical Manual NAVAER 11-70HB-504)	1		
			ATTACHING PARTS			
	AN520-10R8	.	SCREW	4		
	2W18-10M	.	WASHER, Flat (NA) (89372)	8		
	AN365-1032	.	NUT	4		
	---*---					
-7	MK-75 MOD-0	.	POWER SUPPLY (GFP) (for list of replaceable parts see Technical Manual NAVAER 11-70HB-504)	1		
-8	209-74160	.	SUPPORT ASSEMBLY, Radar MK-75 power supply	1		
			ATTACHING PARTS			
	AN520-10R8	.	SCREW	3		
	AN501A10-8	.	SCREW (forward inboard)	1		
	2W1AL14-14-16	.	WASHER, Plain (NA) (89372)	4		
	---*---					
-9	MK-35 MOD-3	.	CONTROL PANEL (GFP) (for list of replaceable parts see Technical Manual NAVAER 11-70HB-504)	1		
-10	MK-8 MOD-8	.	SIGHT UNIT (GFP) (for list of replaceable parts see Technical Manual NAVAER 11-70HB-504) (see Armament)	1		
	209-54135	.	PANEL ASSEMBLY, LH radar bay complete (see figure 307 for complete breakdown)	1		
-11	AN3312-1	.	. RELAY (AC power)	1		
-12	209-74150	.	PANEL ASSEMBLY, Radar test receptacle and fuse (see figure 214 for complete breakdown)	1		
-13	312001	.	. FUSE (MK-16 AFCS) (LTF) (75915)	2	ET	
	312004	.	. FUSE (MK-16 AFCS) (LTF) (75915)	2	FR	
-14	312002	.	. FUSE (MK-16 AFCS) (LTF) (75915)	1		
-15	CTSBA2126P&R5K	.	RANGE CONTROL (CPH) (71450)	1		
-16	175-71046	.	KNOB ASSEMBLY, Range control	1		
	AN565D6H5	.	. SETSCREW	1		
-17	209-54026	.	CONSOLE ASSEMBLY, RH forward (see figures 305 and 306 for complete breakdown)	1		
-18	MS25029-5	.	. SWITCH (instrument AC power) (supersedes 8775K8 (CUT) (15605) for future procurement)	1		
-19	90	.	. CIRCUIT BREAKER (gun sight) (MEH) (76374)	1	ET	
	MS25017-5	.	. CIRCUIT BREAKER (gun sight)	1	FR	
-20	50032	.	QUADRANT ASSEMBLY, Engine power control (RHW) (80477) (for breakdown see Technical Manual NA03-40EA-506)	1	LE	501
	50032-1	.	QUADRANT ASSEMBLY, Engine power control (RHW) (80477)	1	KY	
	QY206-1	.	. GRIP AND LEVER ASSEMBLY (RHW) (80477)	1		
	AN3234-1	.	. . SWITCH (caging)	1		
			AN/APG-30A RADAR SYSTEM			
-21	MK-25 MOD-0	.	RANGE UNIT (GFP) (MK-25 MOD-1 (GFP) may be used as an alternate) (for list of replaceable parts see Technical Manual NAVAER 11-70HB-504) (see -6 for attaching parts)	1		
-22	RT-322/APG-30A	.	FREQUENCY CONVERTER TRANSMITTER (GFP) (for breakdown see Technical Manual NAVAER 16-30APG30-504)	1		
	MT-707/APG-30	.	MOUNT (GFP) (for breakdown see Technical Manual NAVAER 16-30APG30-504)	1		
	AN515-8R10	.	SCREW	16		
-23	PP493A/APG-30	.	POWER SUPPLY, Range computer (GFP) (for breakdown see Technical Manual NAVAER 16-30APG30-504)	1		
-24	MT-739/U	.	MOUNT (GFP) (for breakdown see Technical Manual NAVAER 16-30APG30-504)	1		
	AN515-8R10	.	SCREW	16		
-25	C-775/APG-30	.	CONTROL PANEL (GFP) (for breakdown see Technical Manual NAVAER 16-30APG30-504)	1		
-26	CN112/APG-30	.	VOLTAGE REGULATOR (GFP) (for breakdown see Technical Manual NAVAER 16-30APG30-504)	1		
-27	MT-708/APG-30	.	MOUNT (GFP) (for breakdown see Technical Manual NAVAER 16-30APG30-504)	1		

MK-16 MOD-1 AFCS AND AN/APG-30A GUN RANGING RADAR EQUIPMENT

FIGURE & INDEX NO.	PART NUMBER	1 2 3 4 5 6 7	NOMENCLATURE	UNITS PER ASSY.	USABLE ON CODE	S/C NO.
213			ATTACHING PARTS			
	AN515-8R7	.	SCREW	8		
	2W18-8L	.	WASHER, Flat (NA) (89372)	8		
	209-74222	.	METER ASSEMBLY, Radar target range	1		
			ATTACHING PARTS			
	AN515-8R9	.	SCREW	2		
	2W18-8L	.	WASHER, Flat (NA) (89372)	4		
	AN365-832	.	NUT	2		
			---*---			
-28	A-6815-24	. .	LIGHT FIXTURE, Instrument (GMC) (72914) (includes lamp) (for fixture less lamp order part number A-6815 (GMC) (72914))	1		
	AN3140-327	. . .	LAMP	1		
-29	AN3157-2	. .	LIGHT ASSEMBLY (on target)	1		
	AN3121-313	. . .	LAMP	1		
-30	A-SP-161	. .	RANGE METER (ININ) (81030)	1		
-31	AN515-6R8	. .	SCREW	4		
-32	2W1AL10-12-16	. .	WASHER, Plain (NA) (89372)	4		
-33	AN520-10R10	. .	SCREW	1		
-34	2W1AL14-14-16	. .	WASHER, Plain (NA) (89372)	3		
-35	AN365-1032	. .	NUT	1		
-36	209-74222-3	. .	FACE PLATE, Radar target range meter assembly	1		
-37	209-74221	. .	BRACKET ASSEMBLY, Radar range meter mounting	1		
-38	209-74220	. .	HOOD, Radar range meter	1		
	AN520-10R14	. .	SCREW (attached to back of bracket assembly)	1		
	NAS43DD3-22	. .	SPACER (use between bracket assembly and clamp)	1		
	MS21919WDG4	. .	CLAMP	1		
	2W1AL14-14-16	. .	WASHER, Plain (NA) (89372)	2		
	AN365-1032	. .	NUT	1		
-39	AN931-5-9	. .	GROMMET	1		
-40	209-74150	.	PANEL ASSEMBLY, Radar test receptacle and fuse (see figure 214 for complete breakdown)	1		
-41	312005	. .	FUSE (AN/APG-30A radar) (LTF) (75915)	2		
-42	AN3304-1	. .	RELAY (radar test)	1		
-43	50032	.	QUADRANT ASSEMBLY, Engine power control (RHW) (80477) (for breakdown see Technical Manual NA03-40EA-506)	1	LE	501
	50032-1	.	QUADRANT ASSEMBLY, Engine power control (RHW) (80477)	1	KY	
	QY206-1	. .	GRIP AND LEVER ASSEMBLY (RHW) (80477)	1		
	138106	. . .	SWITCH (range) (UCI) (78947)	1		
	209-54226	.	SHIELD ASSEMBLY, Center electrical pedestal complete (see figure 295 for complete breakdown)	1		
-44	A-SP-157	. .	METER (AFC-X-TAL current) (ININ) (81030)	1		
-45	209-54026	.	CONSOLE ASSEMBLY, RH forward (see figures 305 and 306 for complete breakdown)	1		
-46	90	. .	CIRCUIT BREAKER (AN/APG-30A) (MEH) (76374)	1	ET	
	MS25017-5	. .	CIRCUIT BREAKER (AN/APG-30A)	1	FR	
	209-74137	.	ANTENNA ASSEMBLY, AN/APG-30 radar	1		
			ATTACHING PARTS			
-47	AN515-8R8	.	SCREW	6		
-48	2W18-8L	.	WASHER, Flat (NA) (89372)	6		
-49	AN3-4A	.	BOLT	2		
-50	AN520-10R8	.	SCREW	2		
-51	2W1AL14-14-16	.	WASHER, Plain (NA) (89372)	4		
			---*---			
-52	AN365-832	. .	NUT	4		
-53	2W18-8L	. .	WASHER, Flat (NA) (89372)	8		
-54	AN515-8R8	. .	SCREW	4		
-55	209-74145	. .	BRACKET, AN/APG-30 antenna upper attaching	1		
-56	298064146	. .	BRACKET, AN/APG-30 antenna lower attaching	1		
-57	209-74020	. .	SCREW, Radar wave guide clamp	2		
-58	AN392-67	. .	PIN	2		
-59	181-74027	. .	CLAMP, Radar wave guide attaching	2		
-60	170-74084	. .	NUT, AN/APG-30 radar wave guide disconnect	4		
-61	170-74060	. .	STUD, AN/APG-30 radar wave guide disconnect	4		
-62	209-74138-1	. .	PLATE ASSEMBLY, Radar wave guide attaching LH	1		
-63	209-74138-2	. .	PLATE ASSEMBLY, Radar wave guide attaching RH	1		
-64	AT-561/APG	. .	ANTENNA (GFP) (AT-223/APG-30 (GFP) may be used as an alternate) (for breakdown of AT-223/APG-30 see Technical Manual NAVAER 16-30APG30-504)	1		
-65	4471	.	WAVE GUIDE (COID) (81482)	1		
-66	LA17491	.	GASKET (AITR) (80006)	2		
-67	AN515-8R7	.	SCREW	4		
-68	AN935-8L	.	WASHER	4		
-69	66752	.	WAVE GUIDE (Waveline, Inc) (00443)	1		
-70	194-74113	.	RADOME ASSEMBLY, Solid wall AN/APG-30 radar antenna (supersedes 181-74113 for future procurement)	1		
-71	AN509-10R9	.	SCREW	12		

NOTE: The above information has been compiled from 209-74002, Page 7 (E change) and Page 8 (E change)

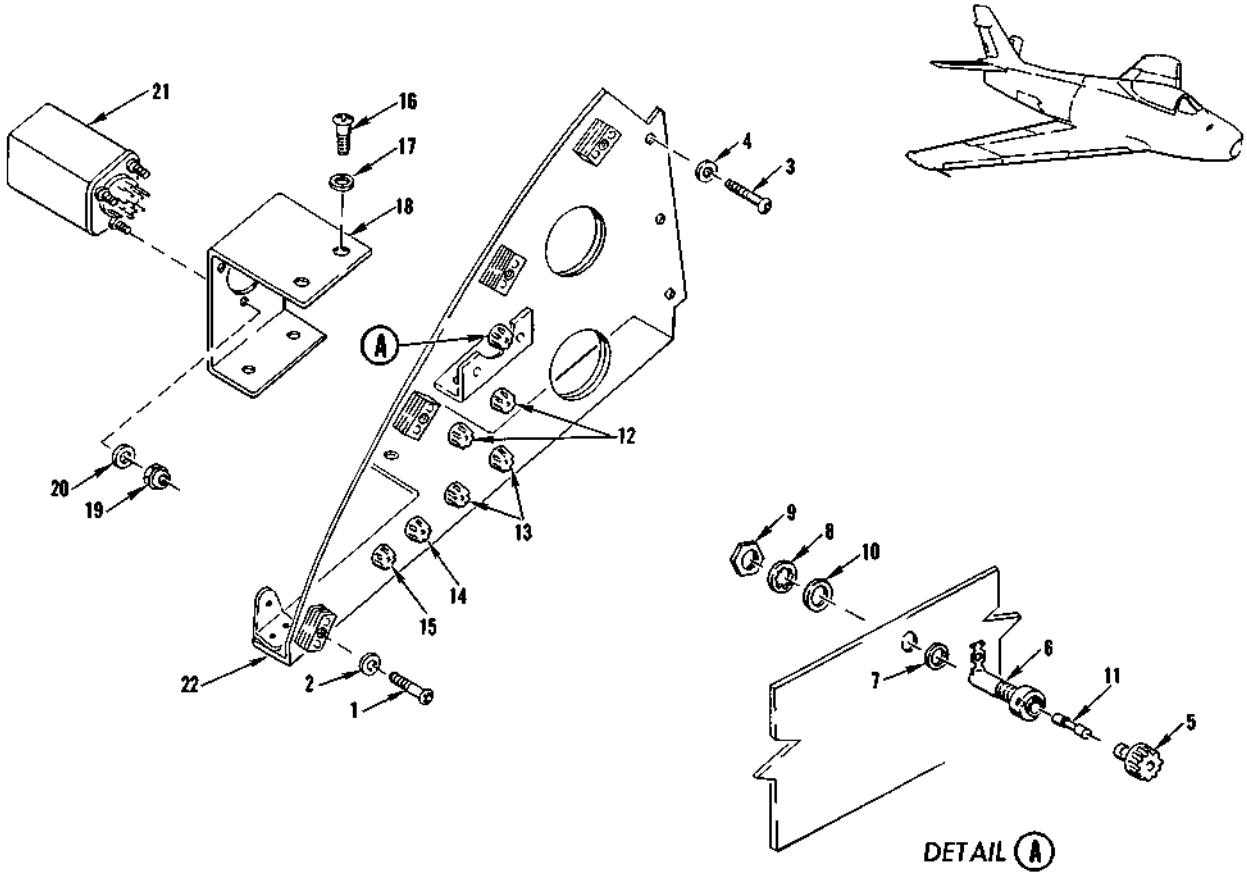

FIGURE 214 - RADAR TEST RECEPTACLE AND FUSE PANEL ASSEMBLY

FIGURE & INDEX NO.	PART NUMBER	1 2 3 4 5 6 7 NOMENCLATURE	UNITS PER ASSY.	USABLE ON CODE
214	209-74150	PANEL ASSEMBLY, Radar test receptacle and fuse	1	ET
	209-74150-31	PANEL ASSEMBLY, Radar test receptacle and fuse	1	FR
	ATTACHING PARTS			
-1	AN515-8R14	SCREW	4	
-2	2W1AL12-12-16	WASHER, Plain (NA)	4	
-3	AN515-8R6	SCREW	3	ET
	AN515-8R7	SCREW	3	FR
-4	2W18-8L	WASHER, Flat (NA)	3	
	---*---			
	342001	. 3 AG EXTRACTOR, Fuse post (LTF)	6	ET
	342001	. 3 AG EXTRACTOR, Fuse post (LTF)	7	FR
-5	342001-SA2	. . KNOB (LTF)	1	
-6	342001-SA1	. . BODY (LTF)	1	
-7	901-2	. . WASHER (LTF)	1	
-8	905-3	. . LOCK WASHER (LTF)	1	
-9	903-12	. . NUT (LTF)	1	
-10	2W1AL34-24-20	. WASHER, Plain (NA)	6	ET
	2W1AL34-24-20	. WASHER, Plain (NA)	7	FR
-11	312005	. FUSE (AN/APX-6B IFF radar) (LTF)	1	
-12	312005	. FUSE (AN/APG-30A radar) (LTF)	2	
-13	312001	. FUSE (MK-16 MOD-1 AFCS) (LTF)	2	ET
	312004	. FUSE (MK-16 MOD-1 AFCS) (LTF)	2	FR
-14	312002	. FUSE (MK-16 MOD-1 AFCS) (LTF)	1	
-15	312001	. FUSE (LABS power) (LTF)	1	FR
-16	AN515-8R7	. SCREW	4	
-17	2W1AL12-12-16	. WASHER, Plain (NA)	4	
-18	209-74152	SUPPORT ASSEMBLY, Radar test relay	1	
-19	AN365-632	. NUT	3	
-20	2W18-6L	. WASHER, Flat (NA)	3	
-21	AN3304-1	. RELAY (radar test)	1	
-22	209-74151	. PLATE ASSEMBLY, Radar test receptacle and fuse	1	ET
	209-74151-31	. PLATE ASSEMBLY, Radar test receptacle and fuse	1	FR

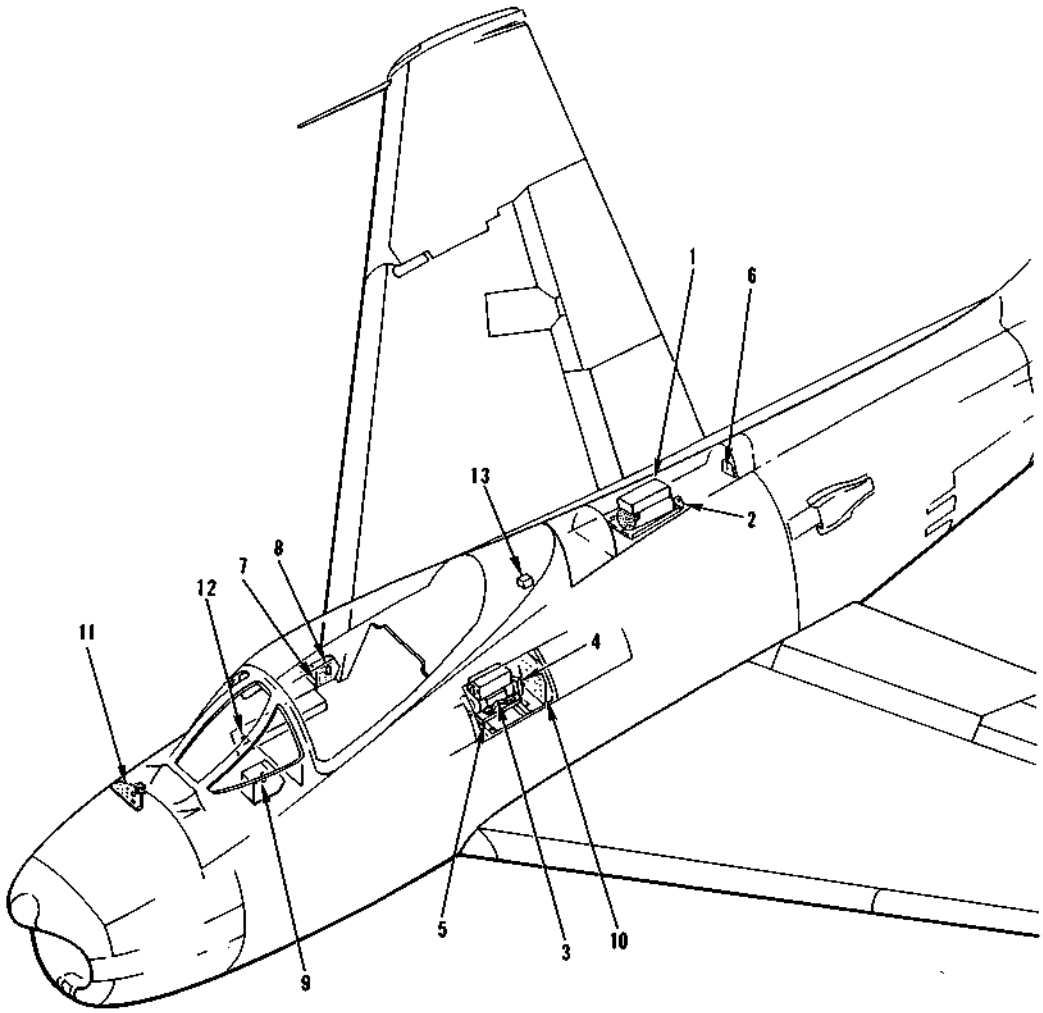

FJ-4-4-54-9C

FIGURE 215 - AC POWER AND DISTRIBUTION SYSTEM - APPLICABLE TO AIRCRAFT CODED (ET)

FIGURE & INDEX NO.	PART NUMBER	1 2 3 4 5 6 7 NOMENCLATURE	UNITS PER ASSY.	USABLE ON CODE	S/C NO.
215-1	MG54D	INVERTER (No. 1) (BARB) (83298) (type E5109-2) (interchangeable with SE-16-2 (LEL) (35662) and SE-16-3 (LEL) (35662)) (for breakdown see Technical Manual NA 03-5HB-502)	1	ET	
	SE-16-2	INVERTER (No. 1) (LEL) (35662) (type E5109-2) (interchangeable with MG54D (BARB) (83298) and SE-16-3 (LEL) (35662) (superseded by SE-16-3 (LEL) (35662) for future procurement) (for breakdown see Technical Manual NA 03-5HH-502)	1	ET	
	SE-16-3	INVERTER (No. 1) (LEL) (35662) (type E5109-2) (interchangeable with MG54D (BARB) (83298) and SE-16-2 (LEL) (35662) (supersedes SE-16-2 (LEL) (35662) for future procurement)	1	ET	
	ATTACHING PARTS				
	AN509-10R12	SCREW	4	ET	
	2W18-10M	WASHER, Flat (NA) (89372)	8	ET	
	AN365-1032	NUT	4	ET	
	---*---				
-2	209-54265	TRAY, Top deck inverter mounting assembly of	1	ET	
	ATTACHING PARTS				
	AN4-7A	BOLT	2	ET	
	2W18-428	WASHER, Flat (NA) (89372)	2	ET	
	---*---				

AC POWER AND DISTRIBUTION SYSTEM - APPLICABLE TO AIRCRAFT CODED (ET)

FIGURE & INDEX NO.	PART NUMBER	1 2 3 4 5 6 7 NOMENCLATURE	UNITS PER ASSY.	USABLE ON CODE	S/C NO.
215-3	SE-5-2	INVERTER (No. 2) (LEL) (35662) (type E1737-1) (for breakdown see Technical Manual AN 03-5HH-17)	1	ET	151
	F148-1	INVERTER (No. 2) (JH) (31435) (type E54807-1) (for breakdown see Technical Manual NA 03-5HA-506)	1	ET	
	ATTACHING PARTS				
	AN6-10A	BOLT	4	ET	
	2W18-616M	WASHER, Flat (NA) (89372)	8	ET	
	AN365-624	NUT	4	ET	
	---*---				
-4	209-54426-11	DEFLECTOR, Inverter exhaust air assembly of	1	ET	
	ATTACHING PARTS				
	AN4-5A	BOLT	3	ET	
	2W18-416M	WASHER, Flat (NA) (89372)	3	ET	
	---*---				
-5	209-54173	TRAY ASSEMBLY, Inverter radio bay	1	ET	
-6	209-54109	PANEL ASSEMBLY, Station 227.5 electrical circuit breaker (see figure 296 for complete breakdown)	1		
	95	. CIRCUIT BREAKER (No. 1 inverter power) (MEH) (76374)	1	ET	
-7	209-54189	PANEL ASSEMBLY, Circuit breaker and fuse cockpit RH rear complete (see figure 314 for complete breakdown)	1		
	312001	. FUSE (fuel flowmeter) (LTF) (75915)	1	ET	
	312001	. FUSE (instrument transformer) (LTF) (75915)	1	ET	
	313001	. FUSE (directional gyro phase C) (LTF) (75915)	1	ET	
	313001	. FUSE (compass coupler phase C) (LTF) (75915)	1	ET	
	312001	. FUSE (gyro horizon phase C) (LTF) (75915)	1	ET	
	312001	. FUSE (inverter warning phase C) (LTF) (75915)	1	BR	
	312001	. FUSE (inverter warning phase C and oxygen indicator) (LTF) (75915)	1	FX	
	312001	. FUSE (yaw damper phase A) (LTF) (75915)	1	LP	
	312001	. FUSE (RMI indicator) (LTF) (75915)	1	ET	
	312001	. FUSE (angle of attack) (LTF) (75915)	1	ET	
	313001	. FUSE (compass coupler phase A) (LTF) (75915)	1	ET	
	312001	. FUSE (inverter warning phase A) (LTF) (75915)	1	ET	
	313001	. FUSE (directional gyro phase A) (LTF) (75915)	1	ET	
	312001	. FUSE (gyro horizon phase A) (LTF) (75915)	1	ET	
	312001	. FUSE (yaw damper phase B) (LTF) (75915)	1	LP	
	312001	. FUSE (hydraulic pressure indicator) (LTF) (75915)	1	ET	
	312003	. FUSE (T-208 power) (LTF) (75915)	1	ET	
	312001	. FUSE (RH gun power) (LTF) (75915)	1	ET	
	312001	. FUSE (LH gun power) (LTF) (75915)	1	ET	
	312001	. FUSE (LABS power) (LTF) (75915)	1	ET	
	312003	. FUSE (sidewinder) (LTF) (75915)	1	ET	
	312001	. FUSE (yaw damper phase C) (LTF) (75915)	1	LP	
-8	9T39Y5	. TRANSFORMER (12 volt instrument) (GEMI) (03512) (supersedes and is interchangeable with 706175 (GEMI) (03512))	1	ET	
	209-54226	SHIELD ASSEMBLY, Center electrical pedestal complete (see figure 295 for complete breakdown)	1		
-9	CP70B1EF106V	. CAPACITOR (MIL-C-25A) (this part included with MK-II gunsight)	1	ET	
-10	209-54170	PANEL ASSEMBLY, Circuit breaker station 156 LH side complete (see figure 303 for complete breakdown)	1		
	90	. CIRCUIT BREAKER (No. 2 inverter) (MEH) (76374)	1	ET	
	C7855-6-200	. CIRCUIT BREAKER (No. 2 inverter power) (SPTD) (82647) (supersedes PGM200 (SPTD) (82647) for future procurement)	1	ET	
	312001	. FUSE (cockpit temperature regulator) (LTF) (75915)	1	ET	
	312001	. FUSE (cockpit anti-ice regulator) (LTF) (75915)	1	ET	
	312005	. FUSE (AN/ARN-21 radio phase A) (LTF) (75915)	1	ET	
	312001	. FUSE (AN/ARN-21 radio phase C) (LTF) (75915)	1	ET	
	314015	. FUSE (secondary bus phase A) (LTF) (75915)	1	ET	
	314015	. FUSE (secondary bus phase C) (LTF) (75915)	1	ET	
	312003	. FUSE (primary bus phase A) (LTF) (75915)	1	ET	
	312003	. FUSE (primary bus phase C) (LTF) (75915)	1	ET	
	312001	. FUSE (fuel quantity) (LTF) (75915)	1	ET	
	314015	. FUSE (secondary bus phase B) (LTF) (75915)	1	ET	
	312005	. FUSE (transformer phase A) (LTF) (75915)	1	ET	
	312005	. FUSE (transformer phase B) (LTF) (75915)	1	ET	
	312005	. FUSE (transformer phase C) (LTF) (75915)	1	ET	
	312001	. FUSE (yaw damper phase A (delta)) (LTF) (75915)	1	ET	
	312001	. FUSE (yaw damper phase C (delta)) (LTF) (75915)	1	ET	
-11	209-74150	PANEL ASSEMBLY, Radar test receptacle and fuse (see figure 214 for complete breakdown)	1		
	312005	. FUSE (AN/APX-6B) (LTF) (75915)	1	ET	
	312005	. FUSE (AN/APG-30A radar phase A) (LTF) (75915)	1	ET	
	312002	. FUSE (MK-16 AFCS) (LTF) (75915)	1	ET	
	312005	. FUSE (AN/APG-30A radar phase C) (LTF) (75915)	1	ET	
	209-54026	CONSOLE ASSEMBLY, RH forward (see figure 305 for complete breakdown)	1		
-12	MS25029-5	. SWITCH (instrument AC power) (supersedes 8775K8 (CUT) (15605) for future procurement)	1	ET	
-13	28565	TRANSFORMER (wye-delta) (FTC) (73386)	1	ET	
	ATTACHING PARTS				
	AN3-4A	BOLT	4	ET	
	2W18-10M	WASHER, Flat (NA) (89372)	8	ET	
	AN365-1032	NUT	4	ET	
	---*---				

NOTE: The above information has been compiled from 209-54002, Page 51.1 (H change)

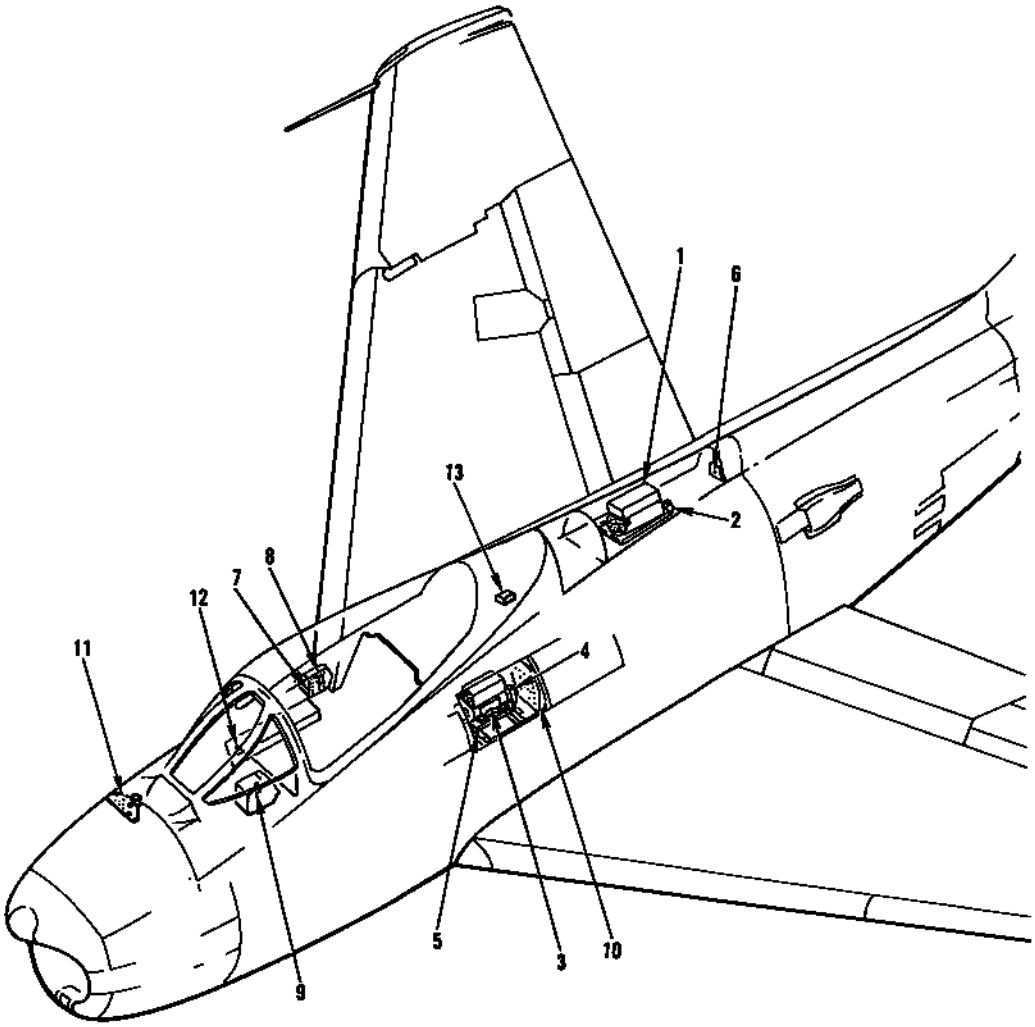

FJ-4B-4-54-19

FIGURE 216 - AC POWER AND DISTRIBUTION SYSTEM - APPLICABLE TO AIRCRAFT CODED (FR)

FIGURE & INDEX NO.	PART NUMBER	1 2 3 4 5 6 7 NOMENCLATURE	UNITS PER ASSY.	USABLE ON CODE	S/C NO.
216-1	MG54D	INVERTER (No. 1) (BARB) (06840) (type E5109-2) (interchangeable with SE-16-2 (LEL) (35662) and SE-16-3 (LEL) (35662) (for breakdown see Technical Manual NA 03-5HB-502)	1	FR	
	SE-16-2	INVERTER (No. 1) (LEL) (35662) (type E5109-2) (interchangeable with MG54D (BARB) (06840) and SE-16-3 (LEL) (35662) (superseded by SE-16-3 (LEL) (35662) for future procurement) (for breakdown see Technical Manual NA 03-5HB-502)	1	FR	
	SE-16-3	INVERTER (No. 1) (LEL) (35662) (type E5109-2) (interchangeable with MG54D (BARB) (06840) and SE-16-2 (LEL) (35662) (supersedes SE-16-2 (LEL) (35662) for future procurement)	1	FR	
	ATTACHING PARTS				
	AN509-10R12	SCREW	4	FR	
	2W18-10M	WASHER, Flat (NA) (89372)	8	FR	
	AN365-1032	NUT	4	FR	
	---*---				
-2	209-54265	TRAY, Top deck inverter mounting assembly of	1	FR	
	ATTACHING PARTS				
	AN4-7A	BOLT	2	FR	
	2W18-428	WASHER, Flat (NA) (89372)	2	FR	
	---*---				
-3	SE-5-2	INVERTER (No. 2) (LEL) (35662) (type E1737-1)	1	HJ	151
	MGE23-2	INVERTER (No. 2) (LEL) (35662) (type E54807-1)	1	FL	151
	ATTACHING PARTS				
	AN6-14A	BOLT	4	FL	151
	AN6-10A	BOLT	4	HJ	151
	2W18-616M	WASHER, Flat (NA) (89372)	8	FR	
	AN365-624	NUT	4	FR	
	---*---				
-4	209-54426-11	DEFLECTOR ASSEMBLY, Inverter exhaust air	1	FR	
	ATTACHING PARTS				
	AN4-5A	BOLT	3	HJ	151

AIR COMPRESSOR - APPLICABLE TO AIRCRAFT CODED (EK)

FIGURE & INDEX NO.	PART NUMBER	1 2 3 4 5 6 7 NOMENCLATURE	UNITS PER ASSY.	USABLE ON CODE	S/C NO.
217	209-54170	PANEL ASSEMBLY, Circuit breaker station 156 LH side (see figure 303 for complete breakdown)	1		
	209-540110	PANEL ASSEMBLY, Circuit breaker station 156 LH side (see figure 304 for complete breakdown)	1		
-1	91	. CIRCUIT BREAKER (water separator heater) (MEH) (76374)	1	GS	
	MS25017-10	. CIRCUIT BREAKER (water separator heater)	1	FR	
-2	94	. CIRCUIT BREAKER (air compressor) (MEH) (76374)	1	GS	
	MS25017-25	. CIRCUIT BREAKER (air compressor)	1	FR	
-3	50013	VALVE, Dump (AR) (00502) (interchangeable with MC2644-1 (MCV) (76050)) (see Armament)	1	EK	
-4	871351	SEPARATOR (WK) (33525) (for breakdown see Technical Manual AN 03-30AY-2 (interchangeable with 870449 (WK) (33525) by removing bracket and straps) (see Armament)	1	EK	
-5	32-R-1600-1-0	COMPRESSOR (CNL) (14650) (for breakdown see T.O. 03-30AJ-2) (see Armament)	1	EK	

NOTE: The above information has been compiled from 209-54002, Page 57.1 (E change)

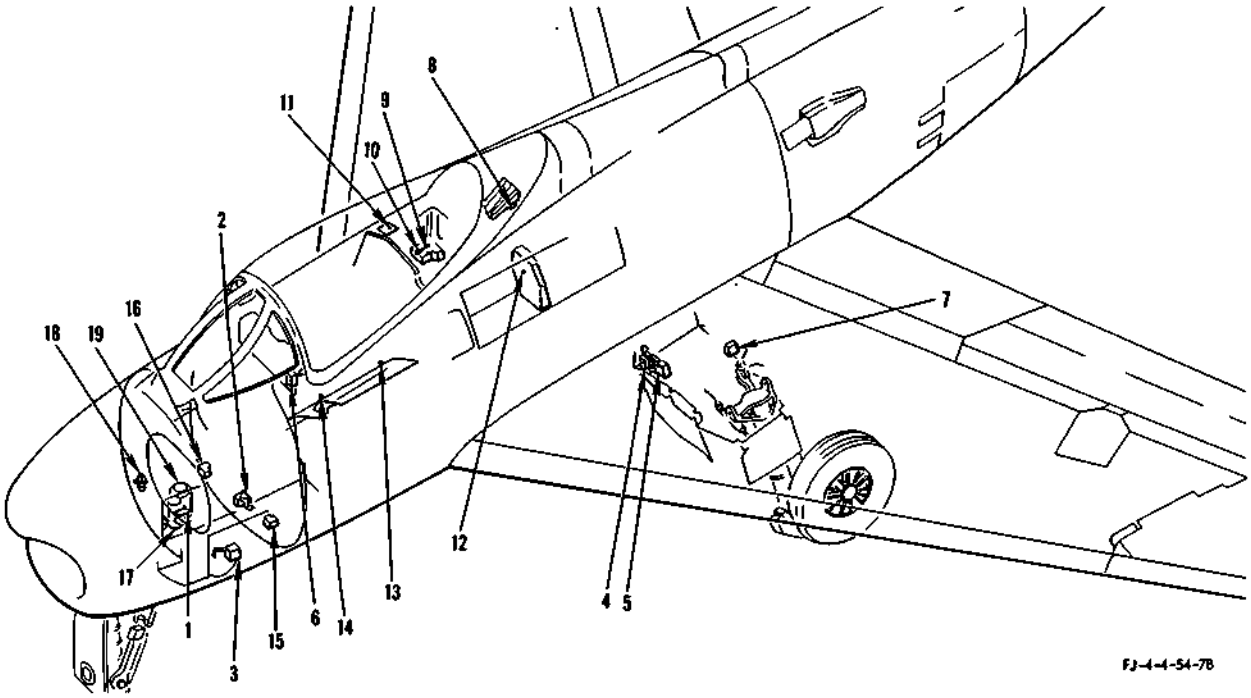

FIGURE 218 - AIR COMPRESSOR - APPLICABLE TO AIRCRAFT CODED (AD)

FIGURE & INDEX NO.	PART NUMBER	1 2 3 4 5 6 7 NOMENCLATURE	UNITS PER ASSY.	USABLE ON CODE	S/C NO.
218-1		*1 NOSE LANDING GEAR DOOR UPLOCK SWITCH ASSEMBLY, LINKAGE AND ATTACHING PARTS			
-2		*1 NOSE LANDING GEAR WHEEL DOOR CLOSE SWITCH ASSEMBLY, LINKAGE AND ATTACHING PARTS			
-3		*1 NOSE LANDING GEAR UPLOCK SWITCH ASSEMBLY, LINKAGE AND ATTACHING PARTS			
-4		*1 MAIN LANDING WHEEL DOOR CLOSE SWITCH ASSEMBLY, LINKAGE AND ATTACHING PARTS			
-5		*1 MAIN LANDING GEAR UPLOCK SWITCH ASSEMBLY, LINKAGE AND ATTACHING PARTS			
-6	10682A-200	SWITCH (landing gear control) (CARM)	1	AD	
	ATTACHING PARTS				
	7S13CN832-8A	SCREW, 100° flush head corrosion-resistant (NA)	4	AD	
	---*---				
-7	1HA1-LH	SWITCH, Enclosed (LH strut door close and lock) (MCS) (see figure 316 for breakdown)	1	AD	
	1HA1-RH	SWITCH, Enclosed (RH strut door close and lock) (MCS) (see figure 316 for breakdown)	1	AD	
	209-54101	PANEL ASSEMBLY, Canopy deck relay complete (see figure 299 for complete breakdown)	1	AD	
-8	9220-PM	. RELAY (landing gear retract control) (LR)	1	AD	
	209-54161	BOX ASSEMBLY, Radio compartment electrical junction RH complete (see figure 309 for complete breakdown)	1	AD	284
-9	D379	. RECTIFIER (ITRC)	3	AD	284
-10	AN3311-2	. RELAY (pneumatic compressor control)	1	AD	284
	209-54106	PANEL ASSEMBLY, Electrical test switch complete (see figure 299 for complete breakdown)	1	AD	284
-11	AN3027-7	. SWITCH (air compressor test)	1	AD	284
	209-54170	PANEL ASSEMBLY, Circuit breaker station 156 LH side complete (see figure 303 for complete breakdown)	1	AD	
-12	91	. CIRCUIT BREAKER (water separator heater) (MEH)	1	AD	
	209-54115	CONSOLE ASSEMBLY, LH forward (see figure 301 for complete breakdown)	1	AD	284
-13	90	. CIRCUIT BREAKER (speed brake compressor control) (MEH)	1	AD	284
-14	91	. CIRCUIT BREAKER (landing gear control and wingfold control) (MEH)	1	AD	
-15	90500-4	SWITCH, Pressure (compressor control LH) (HYRM) (see Armament)	1	AD	284
-16	90500-4	SWITCH, Pressure (compressor control RH) (HYRM)	1	AD	284
-17	871351	SEPARATOR (WK) (see Armament)	1	AD	284
-18	26275	VALVE (air compressor solenoid) (AP) (see Hydraulic System) (interchangeable with 11940 (MVEM) or 14-1086 (PROO) (for breakdown see Technical Manual NA03-30CL-540)	1	AD	284
-19	130-R-0300-8	COMPRESSOR (CNL) (see Armament)	1	AD	284

NOTE: The above information has been compiled from 209-54002, Page 57 (E change)

*1 See Landing Gear Sequencing System for breakdown.

AMMO BOOSTER

FIGURE & INDEX NO.	PART NUMBER	1 2 3 4 5 6 7 NOMENCLATURE	UNITS PER ASSY.	USABLE ON CODE	S/C NO.
222	209-54226	SHIELD ASSEMBLY, Center electrical pedestal complete (see figure 295 for complete breakdown)	1		
-1	90	. CIRCUIT BREAKER (camera control and ammo boost control) (MEH) (76374)	1	ET	
	209-54472	PANEL ASSEMBLY, Circuit breaker and fuse cockpit RH rear (see figure 319 for complete breakdown)	1		
-2	MS25017-5	. CIRCUIT BREAKER (camera control and ammo boost control)	1	FR	
	209-54170	PANEL ASSEMBLY, Circuit breaker station 156 LH side complete (see figure 303 for complete breakdown)	1		
-3	94	. CIRCUIT BREAKER (LH inboard ammo boost) (MEH) (76374)	1	ET	
-4	94	. CIRCUIT BREAKER (LH outboard ammo boost) (MEH) (76374)	1	ET	
-5	209-54163	COVER ASSEMBLY, RH radio compartment electrical junction box complete (see figures 308 and 309 for complete breakdown)	1		
	94	. CIRCUIT BREAKER (RH inboard ammo boost) (MEH) (76374)	1	ET	
	94	. CIRCUIT BREAKER (RH outboard ammo boost) (MEH) (76374)	1	ET	
	MS25017-25	. CIRCUIT BREAKER (LH inboard ammo boost)	1	FR	
	MS25017-25	. CIRCUIT BREAKER (LH outboard ammo boost)	1	FR	
	MS25017-25	. CIRCUIT BREAKER (RH inboard ammo boost)	1	FR	
	MS25017-25	. CIRCUIT BREAKER (RH outboard ammo boost)	1	FR	
-6	209-54161	BOX ASSEMBLY, Radio compartment electrical junction RH complete (see figures 308 and 309 for complete breakdown)	1		
	AN3350-2	. RELAY (RH inboard ammo boost)	1		
	AN3350-2	. RELAY (RH outboard ammo boost)	1		
-7	209-54104	BRACKET ASSEMBLY, LH ammo boost relay station 156 to station 165 complete electrical	1		
	ATTACHING PARTS				
	AN3-4A	SCREW	4		
	2W18-10M	WASHER, Flat (NA) (89372)	4		
	---*---				
-8	AN3350-2	. RELAY (LH outboard ammo boost)	1		
-9	AN3350-2	. RELAY (LH inboard ammo boost)	1		
-10	AN520-10R8	. SCREW	4		
	2W18-10M	. WASHER, Flat (NA) (89372)	8		
	AN365-1032	. NUT	4		
-11	G-56778-A	GRIP (pilots control stick) (GN) (73949) (supersedes G-58778 (GN) (73949) for future procurement) (see Surface and Secondary Controls)	1	ET	
	PE1-116C	GRIP (pilots control stick) (PIQA) (81380) (see Surface and Secondary Controls)	1	FR	
-12	252-3300 *1	BOOSTER MOTOR ASSEMBLY, LH (HUG) (82577) (interchangeable with 38094-1 (AIR) (99193) (see Armament)	2		
	252-3300-1 *1	BOOSTER MOTOR ASSEMBLY, RH (HUG) (82577) (interchangeable with 38094-2 (AIR) (99193) (see Armament)	2		
-13	AN3311-2	RELAY (ammo boost motor control) (added by Service Change No. 493)	1		
	ATTACHING PARTS				
	AN520-10R8	SCREW (added by Service Change No. 493)	2		
	AN960D10L	WASHER (added by Service Change No. 493)	4		
	AN365-1032	NUT (added by Service Change No. 493)	2		
	---*---				

NOTE: The above information has been compiled from 209-54002, Page 74 (F change)

*1 For breakdown of 252-3300 (HUG) (82577) and 252-3300-1 (HUG) (82577) see Technical Manual NA 11-10H-512. For breakdown of 38094-2 (AIR) (99193) and 38094-2 (AIR) (99193) see Technical Manual NA 11-10H-508.

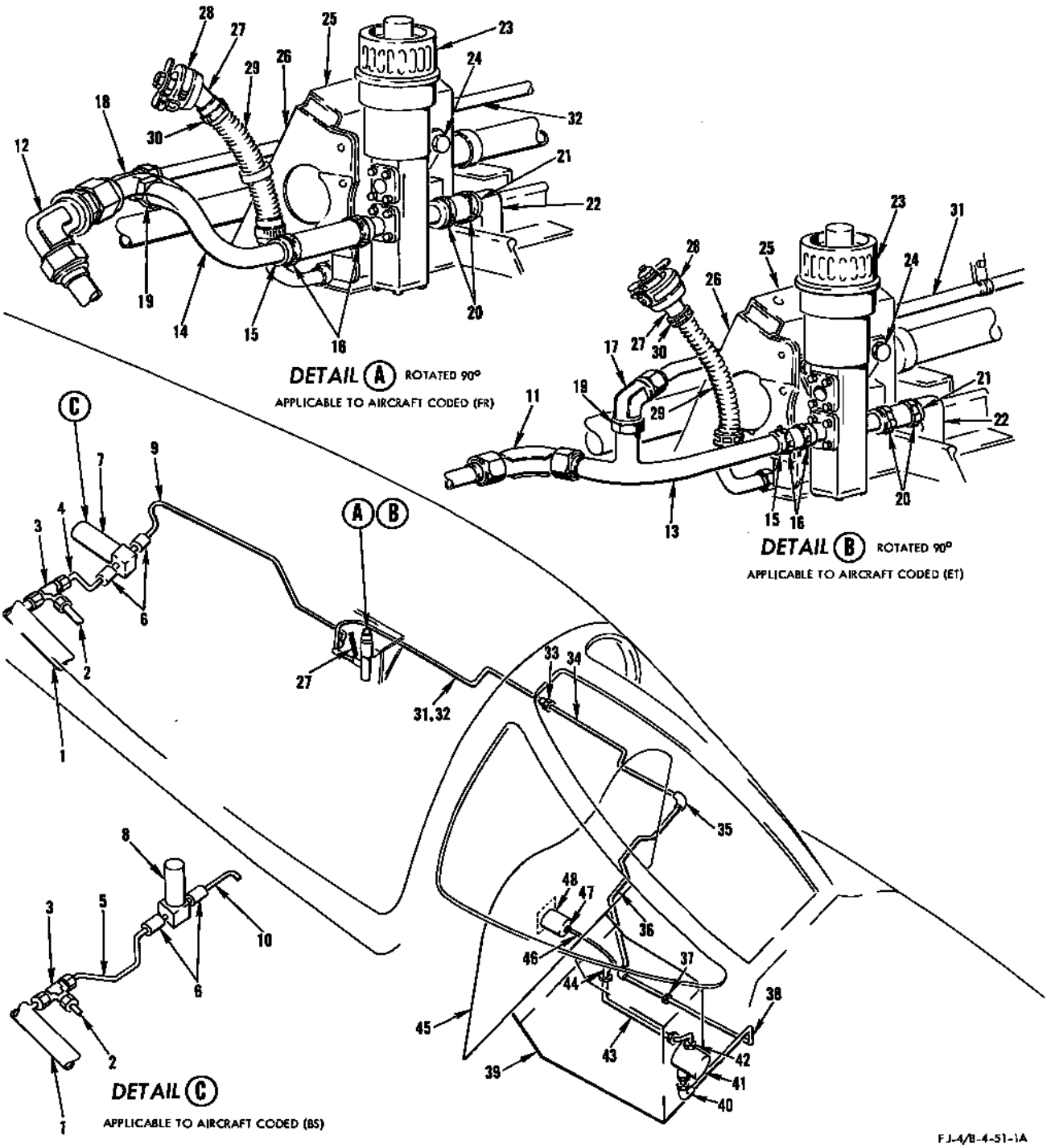

FIGURE 223 - ANTI "G" SUIT AND TURN AND BANK SYSTEMS

FIGURE & INDEX NO.	PART NUMBER	1 2 3 4 5 6 7 NOMENCLATURE	UNITS PER ASSY.	USABLE ON CODE	S/C NO.
223		ANTI "G" SUIT SYSTEM			
-1	194-53443	. DUCT ASSEMBLY, Heat and vent system windshield anti-ice station 128.375 to station 157 (see Heat and Vent System)	1		
-2	209-48801-21	. LINE ASSEMBLY, Union at station 115 to wing fuel air pressure valve (see Fuel System)	1	K	
	209-48801-227	. LINE ASSEMBLY, Union at station 115 to wing fuel air pressure valve (see Fuel System)	1	L	
-3	AN834-10D	. TEE	1		
-4	209-51803-3	. TUBING ASSEMBLY, Anti "G" suit system	1	BR	454

ANTI "G" SUIT AND TURN AND BANK SYSTEMS

FIGURE & INDEX NO.	PART NUMBER	1 2 3 4 5 6 7 NOMENCLATURE	UNITS PER ASSY.	USABLE ON CODE	S/C NO.
223-5	209-51803-9	TUBING ASSEMBLY, Anti "G" suit system	1	BS	454
-6	3H2-10-17	HOSE (NA) (89372)	2		
	AN737RM34	CLAMP	4		
-7	181-51043	FILTER ASSEMBLY, Pilots anti "G" suit installation	1	BR	454
	AN515-8R8	SCREW	3	BR	
	2W18-8L	WASHER, Flat (NA) (89372)	3	BR	
-8	AN6538-3	VALVE (GFP)	1	BS	454
	AN515-6R3	SCREW	4	BS	
	AN935-6	WASHER	4	BS	
-9	209-51803-5	TUBING ASSEMBLY, Anti "G" suit system	1	BR	454
-10	209-51803-11	TUBING ASSEMBLY, Anti "G" suit system	1	FX	454
	209-51803-13	TUBING ASSEMBLY, Anti "G" suit system	1	FR	
-11	AN837-10D	ELBOW	1	ET	
	2W18-1416	WASHER, Flat (NA) (89372)	1	ET	
	AN924D10	NUT	1	ET	
-12	AN833-10D	ELBOW	1	FR	
	AN901-10A	GASKET	1	FR	
-13	194-51804	TEE ASSEMBLY, Turn and bank and "G" suit lines at station 113.5	1	ET	
-14	209-51811	TEE ASSEMBLY, Turn and bank and "G" suit lines at station 113.5	1	FR	
-15	3H2-10-12	HOSE (NA) (89372)	1		
-16	A3122-16	CLAMP, Hose (TIN) (78553)	2		
-17	AN833-5D	ELBOW	1	ET	
-18	AN837-5D	ELBOW	1	FR	
-19	AN6289D5	NUT	1		
	AN6290-5	GASKET	1		
	AN6291-5	RING	1		
-20	A3122-16	CLAMP, Hose (TIN) (78553)	2		
-21	3H2-10-9	HOSE (NA) (89372)	1		
-22	181-51049	TUBE ASSEMBLY, "G" suit air pressure	1		
-23	AN6538-2	VALVE ("G" suit) (GFP)	1		
-24	AN4-6A	BOLT	2		
	2W18-416	WASHER, Flat (NA) (89372)	2		
-25	194-51027-11	SUPPORT ASSEMBLY, "G" suit control valve	1		
	AN515-8R8	SCREW	6		
	2W18-8L	WASHER, Flat (NA) (89372)	12		
	AN365-832	NUT	6		
-26	181-51048-21	BRACKET ASSEMBLY, "G" suit control valve	1		
	AN515-8R10	SCREW	2		
	2W18-8L	WASHER, Flat (NA) (89372)	3		
	AN365-832	NUT	1		
-27	BOS-5-18-123	HOSE ASSEMBLY, Anti "G" suit disconnect (Zep Aero Co) (supersedes 181-51052 for future procurement)	1	QV	
	181-51052	HOSE ASSEMBLY, Anti "G" suit disconnect (superseded by BOS-5-18-123 (Zep Aero Co) for future procurement)	1	QU	
-28	AN6532-1A	CONNECTOR	1	QU	
-29	No Number	HOSE (Anti "G" suit disconnect) (MIL-H-5581 (AER)) (14 inches long)	1	QU	
-30	A3122-16	CLAMP, Hose (TIN) (78553)	2	QU	
		TURN AND BANK SYSTEM			
-31	181-51802-31	TUBE ASSEMBLY, Elbow station 113.5 to union station 94	1	ET	
-32	181-51802-37	TUBE ASSEMBLY, Elbow station 113.5 to union station 94	1	FR	
-33	AN815-5D	UNION	1		
-34	181-51802-13	TUBE ASSEMBLY, Union station 94 to elbow station 79	1		
-35	AN821-5D	ELBOW	1		
-36	181-51802-39	TUBE ASSEMBLY, Elbow station 79 to union station 72 (supersedes 181-51802-27 for future procurement)	1		
-37	AN815-5D	UNION	1		
-38	181-51802-35	TUBE ASSEMBLY, Union station 72 to regulator center pedestal (supersedes 181-51802-19 for future procurement)	1		
-39	209-54226	SHIELD ASSEMBLY, Center electrical pedestal complete (see figure 295 for complete breakdown)	1		
-40	AN833-5D	ELBOW	1		
	AN6290-5	GASKET	1		
	AN6291-5	RING	1		
	AN6289D5	NUT	1		
-41	104200-2	VALVE, Air pressure regulating and reducing (LADM) (91864) (for breakdown see Technical Manual NA 03-30EV-501)	1		
-42	AN832-4D	UNION	1		
	AN6290-4	GASKET	1		
	AN6291-4	RING	1		
	AN6289D4	NUT	1		
-43	181-51802-25	TUBE ASSEMBLY, Pilots panel disconnect to pressure regulator	1		
-44	AN821-4D	ELBOW	1		
-45	209-51005	PANEL ASSEMBLY, Pilots instrument complete (see figures 315 and 317 for complete breakdown)	1		
	209-510108	PANEL ASSEMBLY, Pilots instrument complete (see figure 318 for complete breakdown)	1		
-46	AN6270-4-16	HOSE ASSEMBLY (turn and bank)	1		
-47	AN822-4D	ELBOW	1	ET	
	AN823-4D	ELBOW	1	FR	
-48	AN5820T2	INDICATOR (turn and bank) (GFP)	1	ET	
	1725-1BD-A1-1	INDICATOR (turn and bank) (BARB) (06840) (type MD-21) (MIL-I-5489A-(AER))	1	FR	

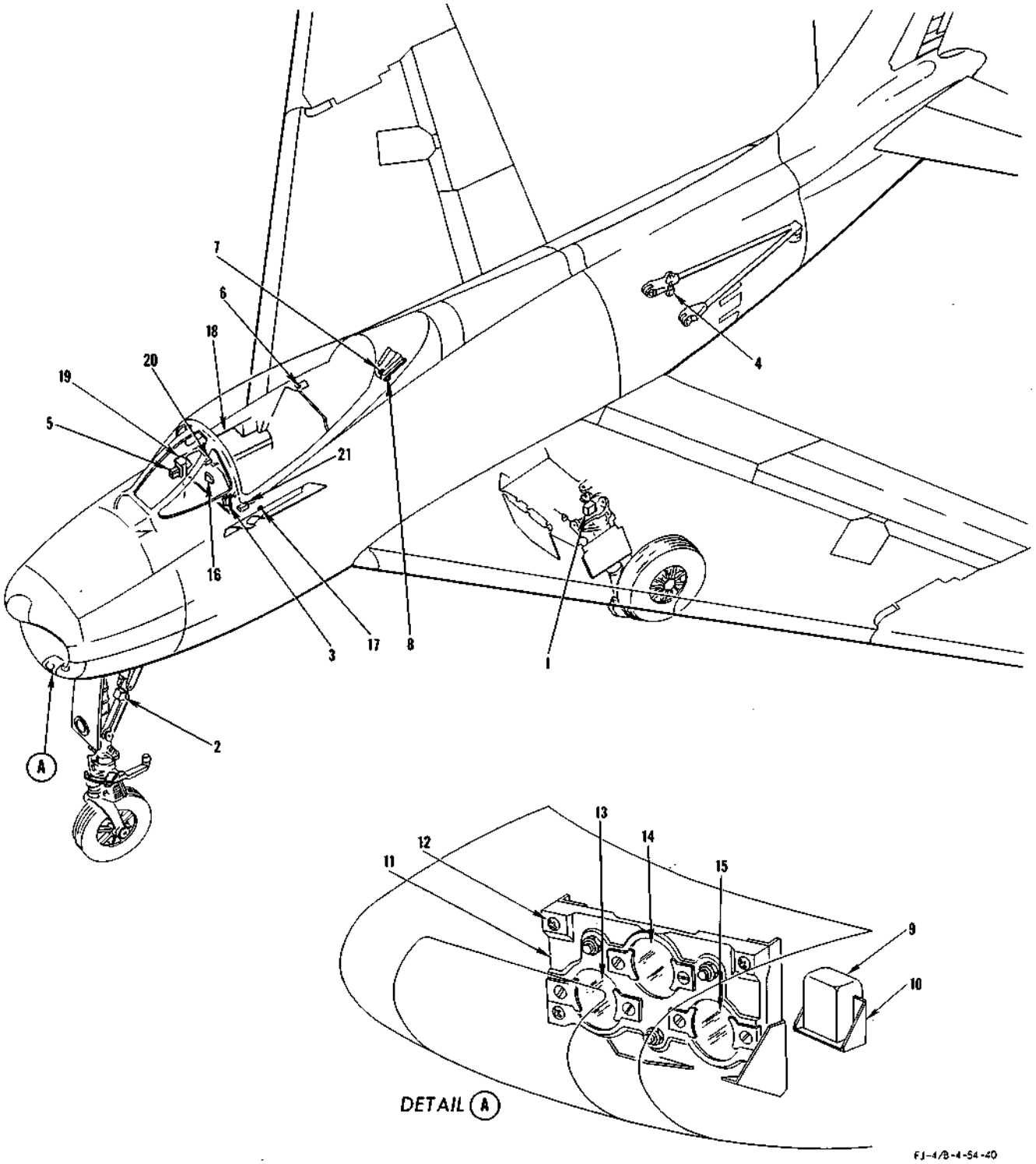

FIGURE 224 - APPROACH LIGHT SYSTEM

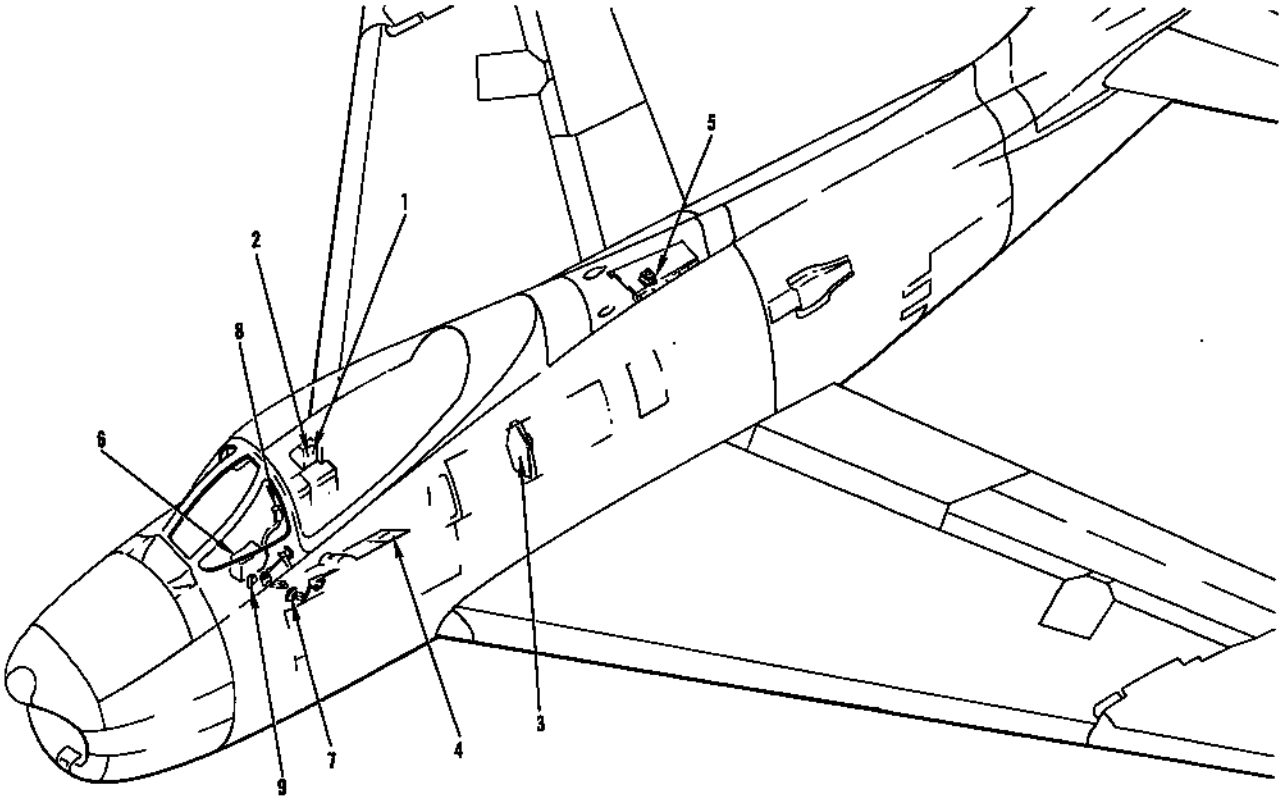

FJ-4-4-54-23B

FIGURE 226 - BOMB AND ROCKET SYSTEM PERMANENT PROVISIONS - APPLICABLE TO AIRCRAFT CODED (ET)

FIGURE & INDEX NO.	PART NUMBER	1 2 3 4 5 6 7 NOMENCLATURE	UNITS PER ASSY.	USABLE ON CODE	S/C NO.
226	209-54189	PANEL ASSEMBLY, Circuit breaker and fuse cockpit RH rear complete (see figure 314 for complete breakdown)	1		
-1	312003	. FUSE (sidewinder power) (LTF) (75915)	1	ET	
-2	92	. CIRCUIT BREAKER (rocket and bomb selector and bomb arming) (MEH) (76374)	1	ET	
	209-54170	PANEL ASSEMBLY, Circuit breaker station 156 LH side complete (see figure 303 for complete breakdown)	1		
-3	PDLM105	. CIRCUIT BREAKER (emergency flight hydraulic pump) (SPTD) (82647)	1	ET	
-4	209-54249	PANEL ASSEMBLY, LH rear console complete (see figure 302 for complete breakdown)	1		
	92	. CIRCUIT BREAKER (LH sidewinder outboard) (MEH) (76374)	1	ET	
	92	. CIRCUIT BREAKER (RH sidewinder outboard) (MEH) (76374)	1	ET	
	92	. CIRCUIT BREAKER (LH sidewinder inboard) (MEH) (76374)	1	J	
	92	. CIRCUIT BREAKER (RH sidewinder inboard) (MEH) (76374)	1	J	
	93	. CIRCUIT BREAKER (bomb and rocket salvo and LH inboard sidewinder power) (MEH) (76374)	1	HQ	
	93	. CIRCUIT BREAKER (bomb and rocket salvo and RH inboard sidewinder power) (MEH) (76374)	1	HQ	
	AN3161P25	. CIRCUIT BREAKER (external stores emergency release)	1	FS	
	209-54138	PANEL ASSEMBLY, Electrical power distribution relay (see figure 297 for complete breakdown)	1		
-5	AN3353-1	. RELAY (canopy bus)	1	ET	
-6	209-54226	SHIELD ASSEMBLY, Center electrical pedestal complete (see figure 295 for complete breakdown)	1		
	92	. CIRCUIT BREAKER (bomb and gun trigger switch) (MEH) (76374)	1	ET	
	AN3311-2	. RELAY (stores and tank release)	1	ET	
-7	EPG-212	SWITCH (external stores emergency release) (AOE) (supersedes EPG-211 (AOE) - for future procurement) (80411)	1	ET	
	ATTACHING PARTS				
	AN515-8R18	SCREW	2	ET	
	2W18-8	WASHER, Flat (NA) (89372)	4	ET	
	AN364-832	NUT	2	ET	
	---*---				
-8	G56778A	GRIP (pilots control stick) (GN) (supersedes G56778 (GN) for future procurement) (73949) (see Surface Controls)	1	ET	
-9	AN3311-2	RELAY (drop tank)	1	ET	
	ATTACHING PARTS				
	AN515-8R6	SCREW	2	ET	
	2W18-8L	WASHER, Flat (NA) (89372)	2	ET	
	---*---				

NOTE: The above information was compiled from 209-54002, Page 80.1 (F change)

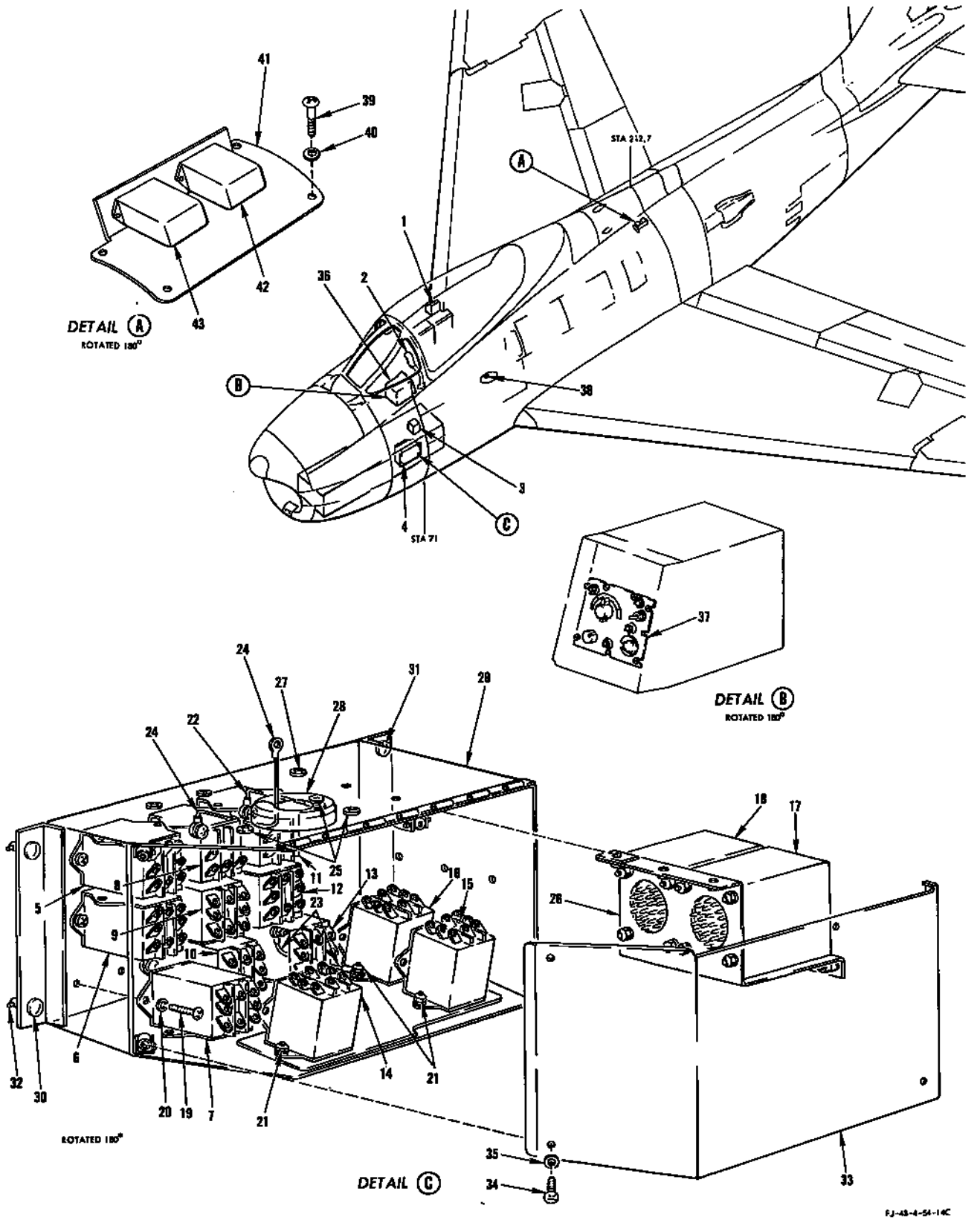

FIGURE 227 - BOMB AND ROCKET SYSTEM PERMANENT PROVISIONS - APPLICABLE TO AIRCRAFT CODED (FR)

BOMB AND ROCKET SYSTEM PERMANENT PROVISIONS - APPLICABLE TO AIRCRAFT CODED (FR)

FIGURE & INDEX NO.	PART NUMBER	1 2 3 4 5 6 7 NOMENCLATURE	UNITS PER ASSY.	USABLE ON CODE	S/C NO.
227-1	209-54472	PANEL ASSEMBLY, Circuit breaker and fuse RH rear (see figure 319 for complete breakdown)	1	FR	
	MS25017-10	. CIRCUIT BREAKER (bomb and rocket fire stations 1 and 6)	1	FR	
	MS25017-10	. CIRCUIT BREAKER (bomb and rocket fire stations 2 and 5)	1	FR	
	MS25017-10	. CIRCUIT BREAKER (bomb and rocket fire stations 3 and 4)	1	FR	
	MS25017-15	. CIRCUIT BREAKER (mode select and bomb arming)	1	FR	
	MS25017-15	. CIRCUIT BREAKER (bomb and gun trigger)	1	FR	
	MS25017-20	. CIRCUIT BREAKER (sidewinder power stations 1 and 6)	1	KX	
	MS25017-20	. CIRCUIT BREAKER (sidewinder power stations 2 and 5)	1	KX	
	MS25017-20	. CIRCUIT BREAKER (sidewinder power stations 3 and 4)	1	KX	
	MS25017-20	. CIRCUIT BREAKER (missile power stations 1 and 6)	1	KY	
	MS25017-20	. CIRCUIT BREAKER (missile power stations 2 and 5)	1	KY	
	MS25017-20	. CIRCUIT BREAKER (missile power stations 3 and 4)	1	KY	
	312002	. FUSE (sidewinder power stations 1 and 6) (LTF) (75915)	1	KX	
	312002	. FUSE (sidewinder power stations 2 and 5) (LTF) (75915)	1	KX	
	312002	. FUSE (sidewinder power stations 3 and 4) (LTF) (75915)	1	KX	
	312002	. FUSE (missile power stations 1 and 6) (LTF) (75915)	1	KY	
	312002	. FUSE (missile power stations 2 and 5) (LTF) (75915)	1	KY	
	312002	. FUSE (missile power stations 3 and 4) (LTF) (75915)	1	KY	
-2	PEI-116C	GRIP (pilots control stick) (PIQA) (81380) (see Surface and Secondary Controls)	1	FR	
-3	2118-5HS	RELAY (store and tank release) (PRL) (82415)	1	FR	
-4	209-54452	BOX ASSEMBLY, Special stores relay complete	1	KX	
	209-54452-11	BOX ASSEMBLY, Special stores relay complete	1	KY	
-5	AN3311-1	. RELAY (bomb and rocket firing station 1 LH outboard)	1	FR	
-6	AN3311-1	. RELAY (bomb and rocket firing station 2 LH intermediate)	1	FR	
-7	AN3311-1	. RELAY (bomb and rocket firing station 3 LH inboard)	1	FR	
-8	AN3311-1	. RELAY (bomb and rocket firing station 4 RH inboard)	1	FR	
-9	AN3311-1	. RELAY (bomb and rocket firing station 5 RH intermediate)	1	FR	
-10	AN3311-1	. RELAY (bomb and rocket firing station 6 RH outboard)	1	FR	
-11	AN3311-1	. RELAY (sidewinder power station 1 LH outboard)	1	FR	
-12	AN3311-1	. RELAY (sidewinder power station 2 LH intermediate)	1	FR	
-13	AN3311-1	. RELAY (sidewinder power station 3 LH inboard)	1	FR	
-14	AN3311-1	. RELAY (sidewinder power station 4 RH inboard)	1	FR	
-15	AN3311-1	. RELAY (sidewinder power station 5 RH intermediate)	1	FR	
-16	AN3311-1	. RELAY (sidewinder power station 6 RH outboard)	1	FR	
-17	2118-5HS	. RELAY (salvo) (PRL) (82415)	1	FR	
-18	2118-5HS	. RELAY (armament selector) (PRL) (82415)	1	FR	
-19	AN515-8R10	. SCREW	16	FR	
-20	2W18-8L	. WASHER, Flat (NA) (89372)	30	FR	
-21	AN365-832	. NUT	14	FR	
-22	1J1-2-3-9	. JUMPER, Wire (NA) (89372)	1	FR	
	2W1AL11-12-16	. WASHER, Plain (NA) (89372) (used with jumper)	1	FR	
	2W1AL14-14-16	. WASHER, Plain (NA) (89372) (used with jumper)	1	FR	
-23	1J1-2-2-4	. JUMPER, Wire (NA) (89372)	1	FR	
	2W1AL11-12-16	. WASHER, Plain (NA) (89372) (used with jumper)	2	FR	
-24	1J1-3-3-30	. JUMPER, Wire (NA) (89372)	1	FR	
-25	AN520-10R10	. SCREW	3	FR	
	2W18-10M	. WASHER, Flat (NA) (89372)	6	FR	
	AN365-1032	. NUT	3	FR	
-26	209-540129	. BRACKET ASSEMBLY, Special stores relay box	1	FR	
	ATTACHING PARTS				
-27	AN515-8R10	. SCREW	6	FR	
	2W18-8L	. WASHER, Flat (NA) (89372)	6	FR	
	---*---				
-28	G51H-C	. GROMMET (03296) (Nylon Molding Corporation)	1	FR	
-29	209-54453	. RELAY BOX ASSEMBLY, Special stores	1	FR	
-30	98292-2-.260	. . STUD (UC) (61864)	2	FR	
-31	98292-2-.180	. . STUD (UC) (61864)	2	FR	
-32	99836	. . CROSS PIN (UC) (61864)	4	FR	
-33	209-54454	. COVER, Special stores relay box	1	KX	
	209-54454-11	. COVER, Special stores relay box	1	KY	
	ATTACHING PARTS				
-34	AN515-8R10	. SCREW	4	FR	
-35	2W18-8L	. WASHER, Flat (NA) (89372)	4	FR	
	---*---				
-36	209-54226	SHIELD ASSEMBLY, Center electric pedestal complete (see figure 295 for complete breakdown)	1	FR	
-37	G-8890-1	. CONTROL BOX ASSEMBLY (bomb and rocket) (GMC) (72914) (superseded by G-9515-1A (GMC) (72914) for future procurement)	1	KX	520
	G-8890-1A	. CONTROL BOX ASSEMBLY (bomb and rocket) (GMC) (72914) (superseded by G-9515-1A (GMC) (72914) for future procurement)	1	KX	525
	G-9515-1	. CONTROL BOX ASSEMBLY (bomb and rocket) (GMC) (72914) (superseded by G-9515-1A (GMC) (72914) for future procurement)	1	KY	520
	G-9515-1A	. CONTROL BOX ASSEMBLY (bomb and rocket) (GMC) (72914) (supersedes G-8890-1 (GMC) (72914), G-8890-1A (GMC) (72914), and G-9515-1 (GMC) (72914) for future procurement)	1	KY	
-38	AN3027-3	SWITCH (150 gallon refueling)	1	LT	
	209-543149	BRACKET ASSEMBLY, Electrical missile relay complete (added by Service Change No. 525 as a component part of 209-54303 wire harness)	1	KY	
	ATTACHING PARTS				
-39	AN520-10R8	SCREW	4	KY	
-40	2W18-10M	WASHER, Flat (NA) (89372)	4	KY	
	---*---				

BOMB AND ROCKET SYSTEM PERMANENT PROVISIONS - APPLICABLE TO AIRCRAFT CODED (FR)

FIGURE & INDEX NO.	PART NUMBER	1	2	3	4	5	6	7	NOMENCLATURE	UNITS PER ASSY.	USABLE ON CODE	S/C NO.
227-41	209-543148	.							BRACKET, Electrical missile relay	1	KY	
-42	9220-PM	.							RELAY (missile unlatched) (LR) (00614)	1	KY	
-43	9220-PM	.							RELAY (missile AC power) (LR) (00614)	1	KY	

NOTE: The above information has been complied from 209-54002. Page 80.2 (F change) Page 80.3 (E change) and Page 80.5 (B change)

ALL DATA DELETED FROM PAGE 681

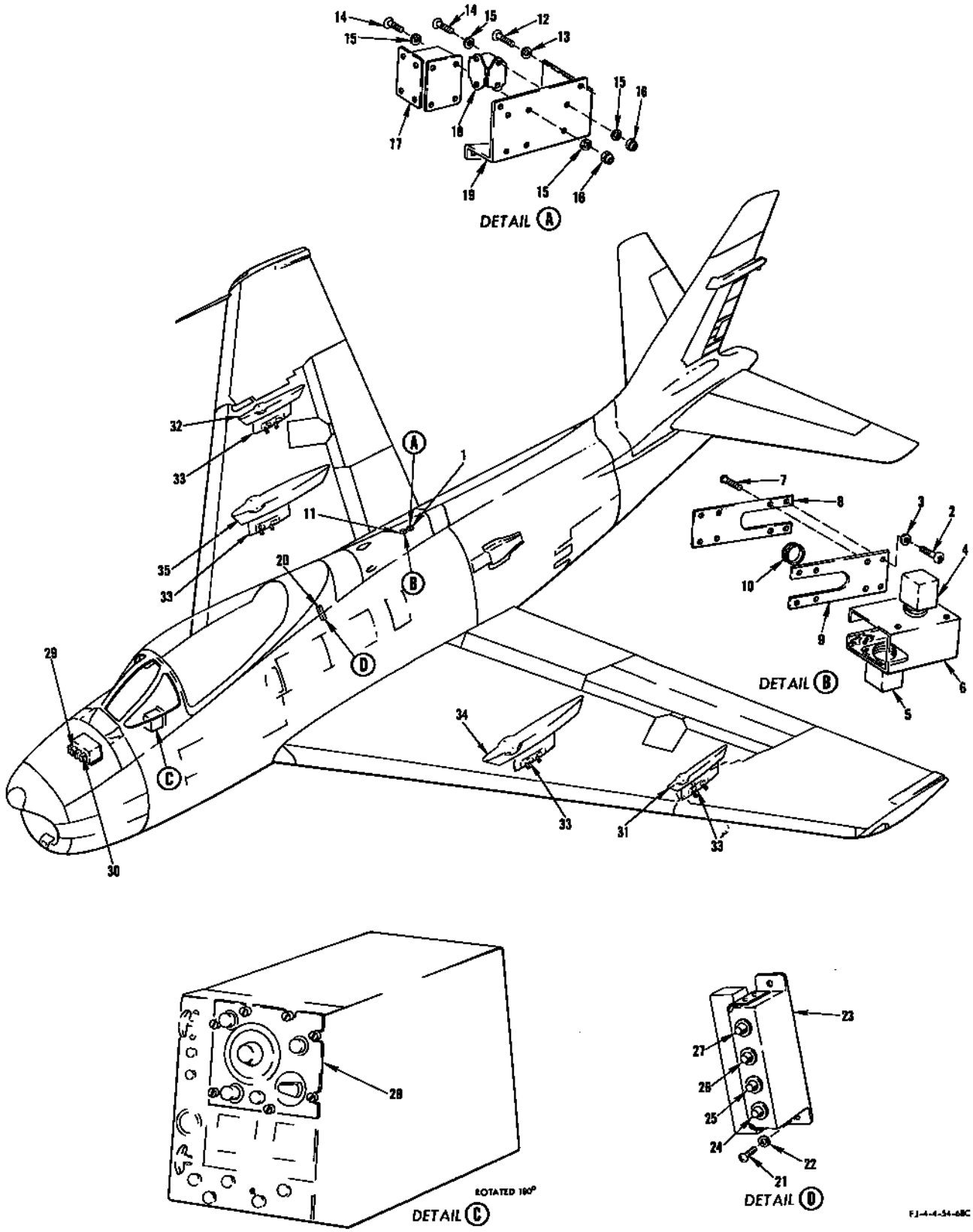

FIGURE 228 - BOMB AND ROCKET SYSTEM PACKAGE - APPLICABLE TO AIRCRAFT CODED (ET)

BOMB AND ROCKET SYSTEM PACKAGE - APPLICABLE TO AIRCRAFT CODED (ET)

FIGURE & INDEX NO.	PART NUMBER	1 2 3 4 5 6 7 NOMENCLATURE	UNITS PER ASSY.	USABLE ON CODE	S/C NO.
228	209-89851-20	PACKAGE, Provisions for external stores (see figure 264 for additional breakdown)	1	JQ	
	209-89851-50	PACKAGE, Provisions for external stores (see figure 264 for additional breakdown)	1	JS	
	209-54389	. WIRING ASSEMBLY, Bomb rocket and sidewinder relay panel	1	ET	
-1	209-54381	. . RELAY PANEL ASSEMBLY, Bomb and rocket	1	ET	
	ATTACHING PARTS				
-2	AN520-10R8	. . SCREW	4	ET	
-3	2W18-10M	. . WASHER, Flat (NA) (89372)	4	ET	
	---*---				
-4	9039-37N	. . . RELAY (armament selector) (LR) (35344)	1	ET	
-5	9039-37N	. . . RELAY (salvo) (LR) (35344)	1	ET	
-6	209-54475	. . . BRACKET ASSEMBLY, Bomb and rocket relay panel (supersedes 209-54382 for future procurment)	1	ET	
-7	AN520-10R7	. . SCREW	4	ET	
-8	209-54383-3	. . COVER PLATE, Bomb and rocket relay panel	1	ET	
-9	209-54383-5	. . COVER PLATE, Bomb and rocket relay panel	1	ET	
-10	295202-20A	. . GROMMET (MKL) (76530)	1	ET	
-11	209-54388	. . PANEL ASSEMBLY, Sidewinder control relay	1	ET	
	ATTACHING PARTS				
-12	AN520-10R8	. . SCREW	4	ET	
-13	2W18-10M	. . WASHER, Flat (NA) (89372)	4	ET	
	---*---				
-14	AN515-8R8	. . . SCREW	6	ET	
-15	2W18-8L	. . . WASHER, Flat (NA) (89372)	12	ET	
-16	AN365-832	. . . NUT	6	ET	
-17	MS25024-1	. . . RELAY (sidewinder DC power)	1	ET	
-18	AN3311-2	. . . RELAY (AC power)	1	ET	
-19	209-54387	. . . PANEL, Sidewinder control relay	1	ET	
-20	209-54147	. BRACKET ASSEMBLY, Sidewinder fuse complete	1	ET	
	ATTACHING PARTS				
-21	AN520-10R8	. SCREW	2	ET	
-22	2W18-10M	. WASHER, Flat (NA) (89372)	2	ET	
	---*---				
-23	209-54148	. . BRACKET, Sidewinder fuse	1	ET	
-24	312001	. . FUSE (LH outboard sidewinder) (LTF) (75915)	1	ET	
-25	312001	. . FUSE (LH inboard sidewinder) (LTF) (75915)	1	ET	
-26	312001	. . FUSE (RH inboard sidewinder) (LTF) (75915)	1	ET	
-27	312001	. . FUSE (RH outboard sidewinder) (LTF) (75915)	1	ET	
	2W1AL34-24-15	. . WASHER, Plain (NA) (89372)	4	ET	
	342001	. . FUSE POST (LTF) (75915)	4	ET	
-28	G-7454	. BOX ASSEMBLY, Bomb and rocket control (GMC) (72914) (NA Design Spec Dwg 209-954215) (superseded by G-7454A) (GMC) (72914) for future procurement)	1	ET	477
	G-7454A	. BOX ASSEMBLY, Bomb and rocket control (GMC) (72914) (NA Design Spec Dwg 209-954215) (supersedes G-7454) (GMC) (72914) for future procurement)	1	ET	
-29	MK-3 MOD-1	. BALLISTIC ELEMENT (GFP) (used on 2.75 inch FFAR rocket)	1	ET	
	MK-4 MOD-1	. BALLISTIC ELEMENT (GFP) (used on 5 inch HVAR rocket)	1	ET	
	MK-5 MOD-0	. BALLISTIC ELEMENT (GFP) (used on 5 inch HPAG rocket)	1	ET	
	MK-6 MOD-0	. BALLISTIC ELEMENT (GFP) (used on 2 inch GIMLET rocket)	1	ET	
-30	MK-1 MOD-3	. AIRFLOW COMPENSATOR (GFP)	1	ET	
-31	209-63012-1 *1	. BEAM ASSEMBLY, BL 153 adapter LH (see Armament)	1	ET	
-32	209-63012-2 *1	. BEAM ASSEMBLY, BL 153 adapter RH (see Armament)	1	ET	
-33	No Number	. LAUNCHER ASSEMBLY, Bomb and rocket (Aero 15B and Aero 15C) (GFP) (see Armament)	1	ET	
	209-89854	PACKAGE, 200 gallon fuel tank adapter beams	1	ET	
-34	209-63011-1	. BEAM ASSEMBLY, BL 105 adapter LH (superseded by 209-63011-31 for future procurment) (see Armament)	1	ET	511
	209-63011-21	. BEAM ASSEMBLY, BL 105 adapter LH (superseded by 209-63011-31 for future procurment) (see Armament)	1	ET	
	209-63011-31	. BEAM ASSEMBLY, BL 105 adapter LH (supersedes 209-63011-1 and 209-63011-21 for future procurment) (see Armament)	1	ET	
-35	209-63011-2	. BEAM ASSEMBLY, BL 105 adapter RH (superseded by 209-63011-32 for future procurment) (see Armament)	1	ET	511
	209-63011-22	. BEAM ASSEMBLY, BL 105 adapter RH (superseded by 209-63011-32 for future procurment) (see Armament)	1	ET	
	209-63011-32	. BEAM ASSEMBLY, BL 105 adapter RH (supersedes 209-63011-2 and 209-63011-22 for future procurment) (see Armament)	1	ET	
-36	No Number	LAUNCHER ASSEMBLY, Bomb and rocket (Aero 15B or Aero 15C (GFP) (see Armament)	2	ET	

NOTE: *1 Used on 209-89851-20 package only

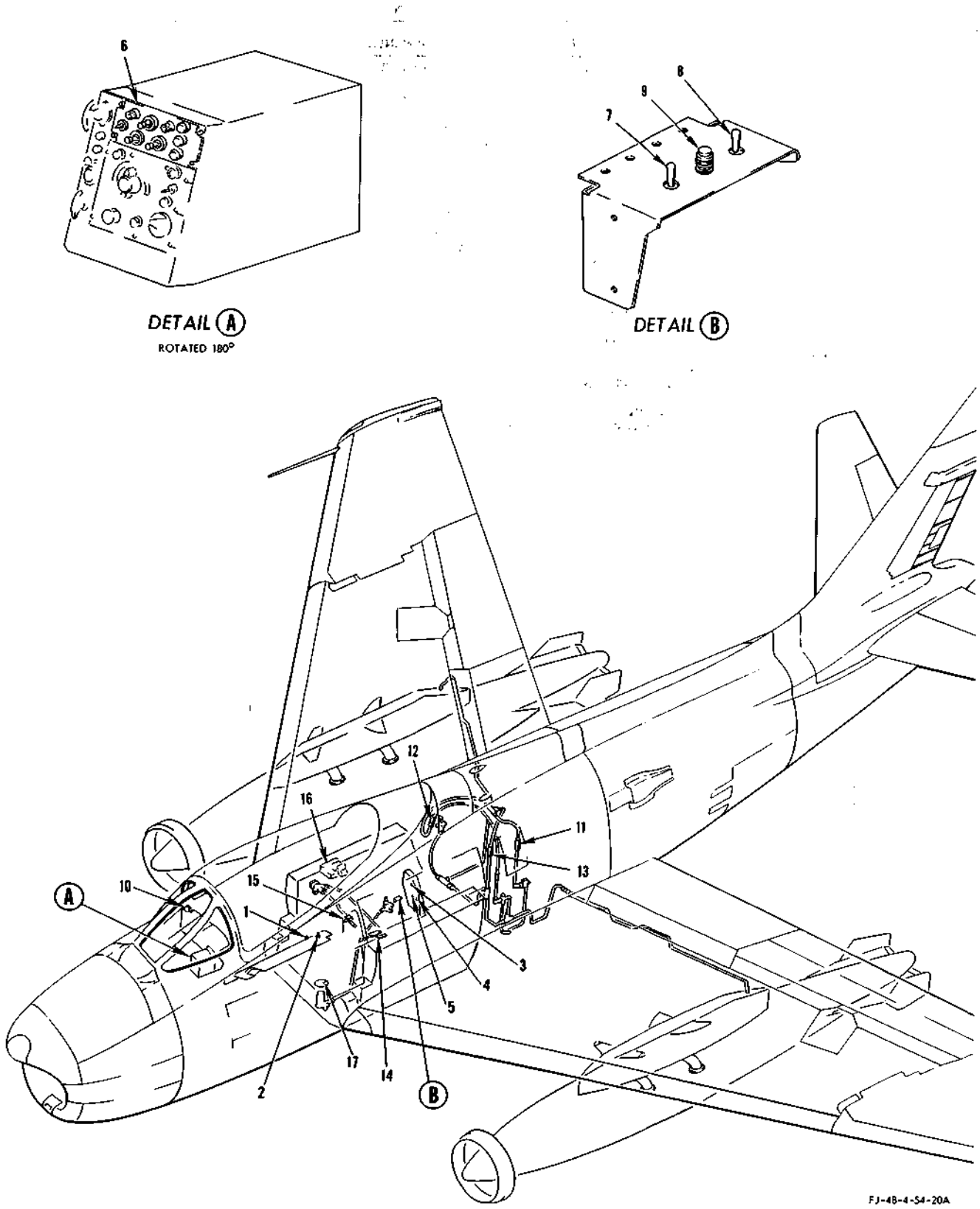

FIGURE 229 - BUDDY TANK SYSTEM PERMANENT PROVISIONS - APPLICABLE TO AIRCRAFT CODED (FR)

BUDDY TANK SYSTEM PERMANENT PROVISIONS - APPLICABLE TO AIRCRAFT CODED (FR)

FIGURE & INDEX NO.	PART NUMBER	1 2 3 4 5 6 7 NOMENCLATURE	UNITS PER ASSY.	USABLE ON CODE	S/C NO.
229	209-54115	CONSOLE ASSEMBLY, LH forward (see figure 301 for complete breakdown)	1		
-1	MS25017-15	. CIRCUIT BREAKER (stores jettison and drop tank transfer)	1	FR	
-2	115AT1	. SWITCH (drop tank fuel transfer) (MCS) (91929) (superseded by 115AT19 (MCS) (91929) for future procurement)	1	FR	
	115AT19	. SWITCH (drop tank fuel transfer) (MCS) (91929) (supersedes 115AT1 (MCS) (91929) for future procurement)	1	FR	
	209-540110	PANEL ASSEMBLY, Circuit breaker station 156 LH side complete (see figure 304 for complete breakdown)	1		
-3	MS25017-15	. CIRCUIT BREAKER (buddy tank power)	1	FR	
-4	MS25017-15	. CIRCUIT BREAKER (buddy tank emergency power)	1	FR	
-5	MS25017-15	. CIRCUIT BREAKER (buddy fuel dump)	1	FR	
-6	209-543142	BOX ASSEMBLY, Buddy tank control (for breakdown see Technical Manual NAVAER 03-100-504)	1	FR	
	209-542114	BRACKET ASSEMBLY, Electrical fuel valve close test switch	1	FR	
-7	MS25068-10	SWITCH (internal fuel transfer test)	1	FR	
-8	MS25068-10	SWITCH (cross ship fuel transfer test)	1	FR	
-9	AN3157-7	LIGHT (valve closed indicator)	1	FR	
	AN3121-313	. LAMP	1	FR	
-10	F-70785	INDICATOR (instrument fuel flow totalizer) (RCO) (50625)	1	FR	
-11	117235	VALVE (LH drop tank air solenoid) (WTR) (79318) (see Fuel System)	1	FR	
-12	117235	VALVE (RH drop tank air solenoid) (WTR) (79318) (see Fuel System)	1	FR	
-13	8-1400	VALVE (high pressure air on) (SAHR) (96736) (see Fuel System)	1	FR	
-14	08-17531D	VALVE (fuel by-pass) (SAI) (78493) (see Fuel System)	1	FR	
-15	08-17180F	VALVE (internal fuel transfer) (SAI) (78493) (see Fuel System)	1	FR	
-16	209-54161	BOX ASSEMBLY, Radio compartment electrical junction RH complete (see figure 309 for complete breakdown)	1		
	AN3311-2	. RELAY (low fuel sensing)	1	FR	
-17	AN3027-6	SWITCH (buddy tank level float test)	1	NW	
	AN3027-7	SWITCH (buddy tank level float test)	1	ME	

NOTE: The above information has been compiled from 209-54002. Page 100 (G change)

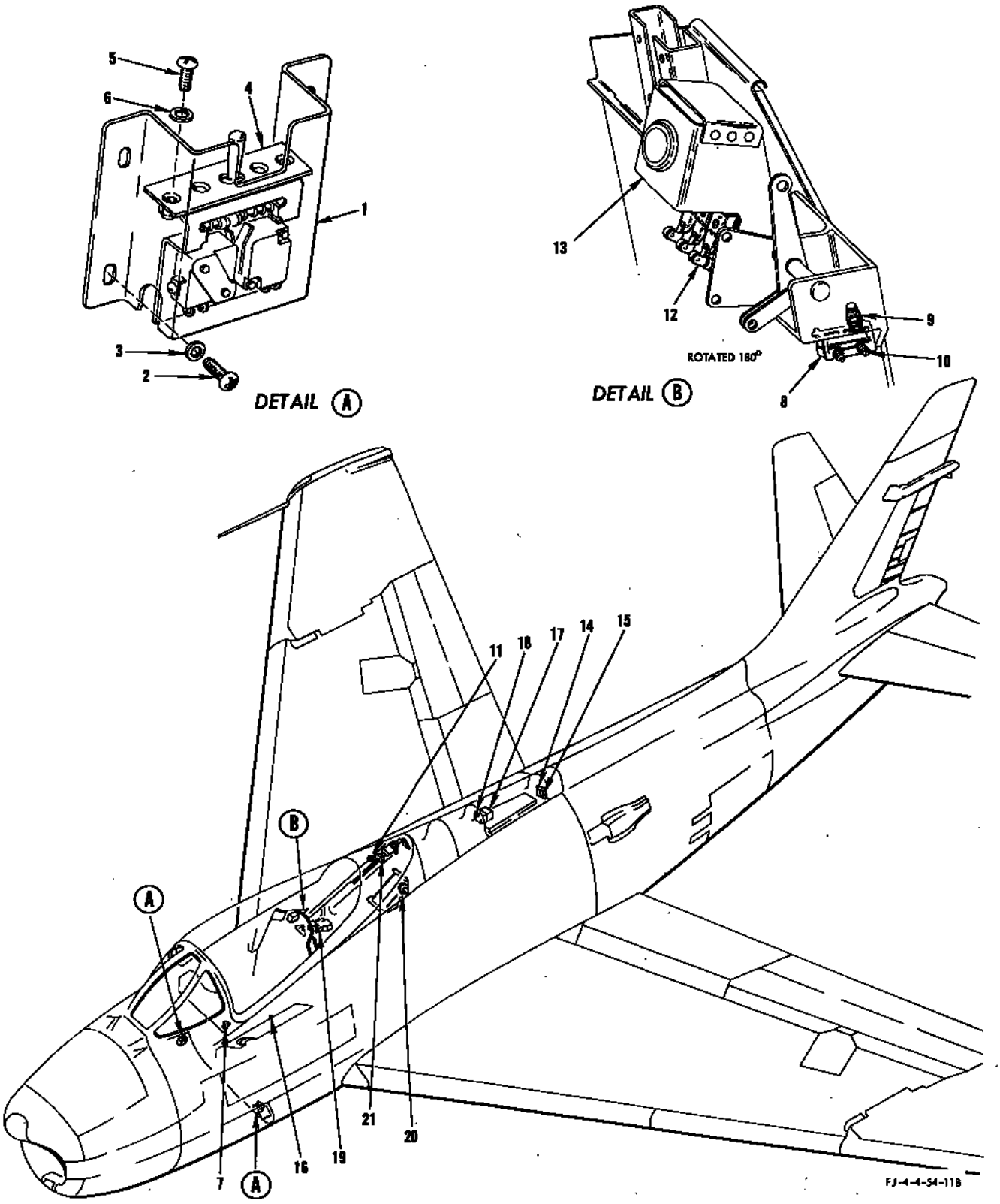

FIGURE 230 - CANOPY ACTUATOR

CANOPY ACTUATOR

FIGURE & INDEX NO.	PART NUMBER	1 2 3 4 5 6 7 NOMENCLATURE	UNITS PER ASSY.	USABLE ON CODE	S/C NO.
230-1	181-54113	GUARD, Canopy external electrical switch	2		
-2	AN520-10R8	SCREW	8		
-3	2W18-10M	WASHER, Flat (NA) (89372)	8		
-4	2AT-5	SWITCH (external canopy LH and RH) (MCS) (91929)	2		
-5	AN515-6R6	SCREW	4		
-6	2W18-6L	WASHER, Flat (NA) (89372)	4		
-7	AN3021-6	SWITCH (pilots canopy)	1		357
	AN3225-1	GUARD	1	BR	357
	209-54348	SHIELD, Canopy control switch	1	BS	
-8	1HS-1	SWITCH (canopy seal emergency dump) (MCS) (91929)	1		
-9	AN3168-2	ACTUATOR	1		
	ATTACHING PARTS				
-10	AN515-8R20	SCREW	2		
	2W18-6L	WASHER, Flat (NA) (89372)	2		
	AN365-632	NUT	2		
	---*---				
-11	AN3210-1	SWITCH (canopy open limit)	1		
	9-10831	ACTUATOR (MCS) (91929)	1		
	ATTACHING PARTS				
	AN3-5A	BOLT	2		
	2W18-10M	WASHER, Flat (NA) (89372)	3		
	AN365-1032	NUT	1		
	---*---				
-12	1HS-1	SWITCH (canopy latched) (MCS) (91929)	1		
	AD5721R	ACTUATOR (MCS) (91929)	1		
-13	209-54011	BRACKET, Canopy switch actuator	1		
	209-54014	ACTUATOR, Canopy switch	1		
	209-54109	PANEL ASSEMBLY, Station 227.5 electrical circuit breaker (see figure 296 for complete breakdown)	1		
-14	90	. CIRCUIT BREAKER (canopy relay) (MEH) (76374)	1	ET	
	MS25017-5	. CIRCUIT BREAKER (canopy relay)	1	FR	
-15	94	. CIRCUIT BREAKER (canopy actuator) (MEH) (76374)	1	ET	
	MS25017-25	. CIRCUIT BREAKER (canopy actuator)	1	FR	
	209-54115	CONSOLE ASSEMBLY, LH forward (see figures 300 and 301 for complete breakdown)	1		
-16	91	. CIRCUIT BREAKER (cockpit pressurizing control) (MEH) (76374)	1		
	MS25017-10	. CIRCUIT BREAKER (cockpit pressure)	1		
	209-54138	PANEL ASSEMBLY, Electrical power distribution relay (see figures 297 and 298 for complete breakdown)	1		
-17	AN3350-2	. RELAY (canopy open)	1		
-18	AN3350-2	. RELAY (canopy closed)	1		
	209-54161	BOX ASSEMBLY, Radio compartment electrical junction RH (see figures 308 and 309 for complete breakdown)	1		
-19	9057-48F	. RELAY (canopy seal depressurizing control) (LR) (35344)	1		
-20	10212-200	VALVE, Canopy seal (CARM) (81839) (for breakdown see Technical Manual NA 03-10AB-545) (see Heat and Vent System)	1		
-21	D-1870	ACTUATOR, Canopy (HOOV) (81817) (for breakdown see Technical Manual NA 03-5CHP-512) (superseded by D-1870-1 (HOOV) (81817) for future procurement) (see Fwd Fus - Canopy)	1		
	D-1870-1	ACTUATOR, Canopy (HOOV) (81817) (supersedes D-1870 (HOOV) (81817) for future procurement) (see Fwd Fus - Canopy)	1		
	209-71226	SUPPORT ASSEMBLY, AN/ARN-14 antenna and canopy switch mounting (see figure 210 for breakdown)	1		

NOTE: The above information has been compiled from 209-54002, Page 56 (F change)

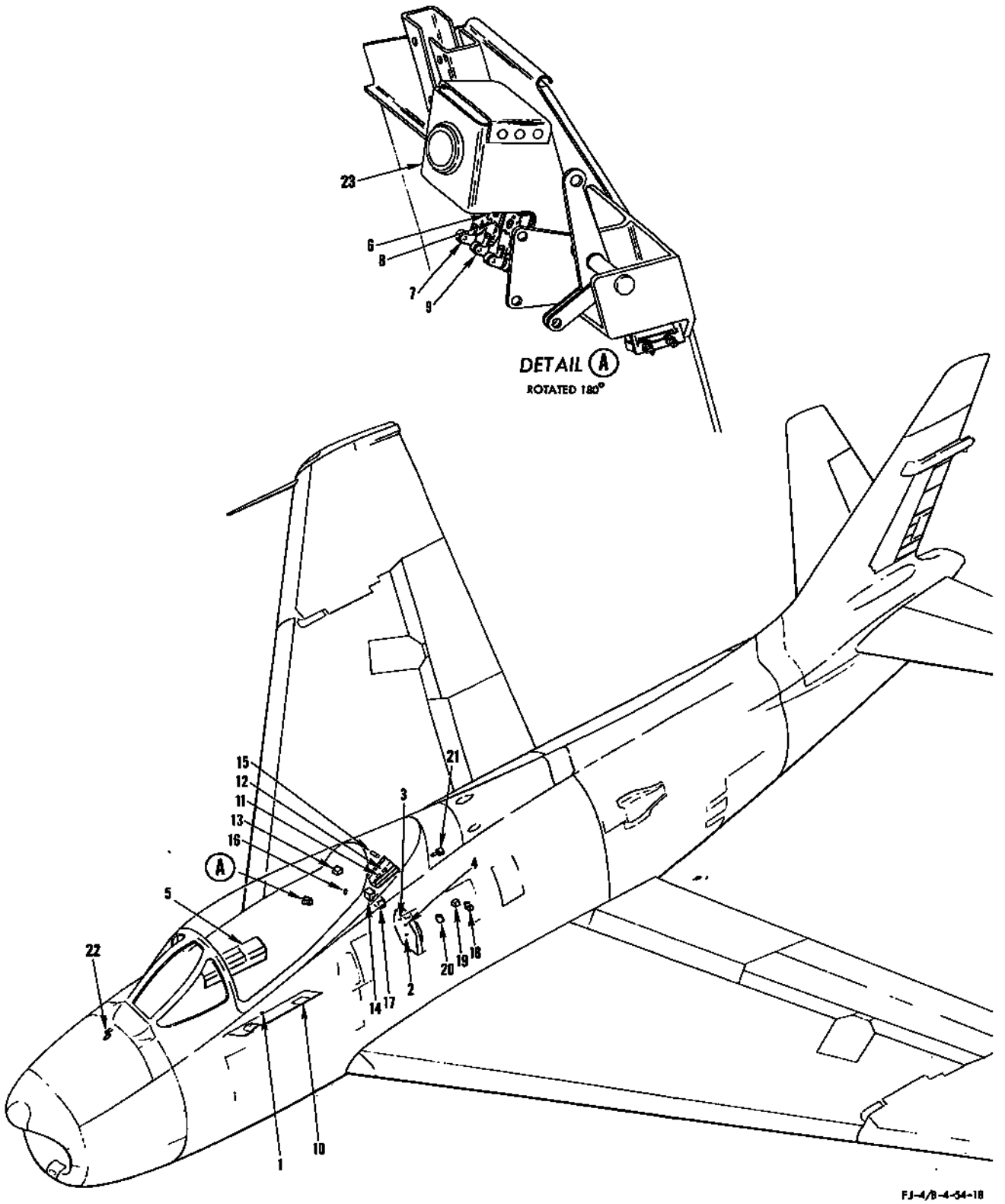

FIGURE 231 - COCKPIT AIR CONDITIONING, DEFROST AND ANTI-ICE SYSTEM

CONSOLE AND INSTRUMENT LIGHTS

FIGURE & INDEX NO.	PART NUMBER	1 2 3 4 5 6 7 NOMENCLATURE	UNITS PER ASSY.	USABLE ON CODE	S/C NO.
233-1	209-54026	CONSOLE ASSEMBLY, RH forward (see figures 305 and 306 for complete breakdown)	1		
	90	. CIRCUIT BREAKER (console floodlights) (MEH) (76374)	1	ET	
	MS25017-5	. CIRCUIT BREAKER (console floodlights)	1	FR	
	90	. CIRCUIT BREAKER (console lights) (MEH) (76374)	1	ET	
	MS25017-5	. CIRCUIT BREAKER (console lights)	1	FR	
	RW30G101	. RESISTOR (console floodlights) (JAN-R-26)	1		
	RW30G350	. RESISTOR (console floodlights) (JAN-R-26)	1		
	CM11030	. RESISTOR, Variable (console and floodlight rheostat) (CLR) (12697)	1		
	1ATS	. SWITCH (console floodlight) (MCS) (91929)	1		
	MS25010-3A	. LIGHT ASSEMBLY (RH console panel light)	15	EE	
	MS25010-3A	. LIGHT ASSEMBLY (RH console panel light)	14	FL	
	AN3140-327	. . LAMP	1		
-2	209-54226	SHIELD ASSEMBLY, Center electrical pedestal complete (see figure 295 for complete breakdown)	1		
	A-6795-24	. LIGHT FIXTURE, Instrument (AFC-X-TAL current meter light) (GMC) (72914)	1		
	AN3140-327	. . LAMP	1		
-3	209-51005	PANEL ASSEMBLY, Pilots instrument complete (see figure 315 for breakdown)	1		
	209-510108	PANEL ASSEMBLY, Pilots instrument complete (see figure 318 for breakdown)	1		
	MS25010-3A	. LIGHT ASSEMBLY (instrument panel light)	12		
	AN3140-327	. . LAMP	1		
-4	209-54115	CONSOLE ASSEMBLY, LH forward (see figures 300 and 301 for complete breakdown)	1		
	MS25010-3A	. LIGHT ASSEMBLY (console panel light)	7	HA	
	MS25010-3A	. LIGHT ASSEMBLY (console panel light)	8	QS	
	AN3140-327	. . LAMP	1		
-5	209-54038	CONSOLE ASSEMBLY, Heat and vent control (see figure 296 for complete breakdown)	1		
	MS25010-3A	. LIGHT ASSEMBLY (panel assembly)	3		
	AN3140-327	. . LAMP	1		
	209-54283	PANEL ASSEMBLY, Electrical emergency fuel transfer control (superseded by 209-54283-11 for future procurement) (see figure 313 for complete breakdown)	1	DN	
	209-54283-11	PANEL ASSEMBLY, Electrical emergency fuel transfer control (supersedes 209-54283 for future procurement) (see figure 313 for complete breakdown)	1	DP	
-6	MS25010-3A	. LIGHT ASSEMBLY (panel light)	2		
	AN3140-327	. . LAMP	1		
-7	A-4255A	INSTRUMENT LIGHT (red) (RH aft console floodlight) (GMC) (72914)	1	ET	
	A-4255A-2	INSTRUMENT LIGHT (red) (RH aft console floodlight) (GMC) (72914)	1	FR	
	303	. LAMP (GE) (24446)	1		
-8	A-4255A	INSTRUMENT LIGHT (red) (LH aft console floodlight) (GMC) (72914)	1	ET	
	A-4255A-2	INSTRUMENT LIGHT (red) (LH aft console floodlight) (GMC) (72914)	1	FR	
	303	. LAMP (GE) (24446)	1		
-9	G-6080	CONTROL PANEL, Exterior lights (GMC) (72914)	1	ET	
	209-543170	CONTROL PANEL, Exterior lights (make from G-6080 (GMC) (72914) by removing ST52P (GMC) (72914) and installing AN3027-3)	1	FR	
-10	209-51151-11	PANEL ASSEMBLY, Mach trim switch (see figure 270 for complete breakdown)	1	ET	
	209-51151-31	PANEL ASSEMBLY, Mach trim switch (see figure 271 for complete breakdown)	1	FR	
	MS25010-3A	. LIGHT ASSEMBLY (mach trim)	1		
	AN3140-327	. . LAMP	1		
-11	209-51151-21	PANEL ASSEMBLY, Yaw damper switch (see figure 293 for complete breakdown)	1	ET	
	MS25010-3A	. LIGHT ASSEMBLY (yaw damper)	1	ET	
	AN3140-327	. . LAMP	1	ET	
-12	15716-1-A	CONTROLLER, Compass (ECP) (19315) (superseded by 15716-1-B (ECP) (19315) for future procurement) (for breakdown see Technical Manual NA 05-15-599)	1	LE	
	15716-1-B	CONTROLLER, Compass (ECP) (19315) (supersedes 15716-1-A (ECP) (19315) for future procurement)	1	KY	
-13	181-51129-10	PANEL ASSEMBLY, Pilots speed brake indicator complete (see figure 278 for complete breakdown)	1	U	
	181-51129-20	PANEL ASSEMBLY, Pilots speed brake indicator complete (see figure 278 for complete breakdown)	1	GA	
	MS25010-4	. LIGHT ASSEMBLY (speed brake indicator light)	1	ET	
	AN3140-327	. . LAMP	1	ET	
-14	209-51197	PANEL ASSEMBLY, Take-off trim indicator complete (see figure 271 for complete breakdown)	1	FR	
	MS25010-3A	. LIGHT ASSEMBLY (take-off trim)	1	FR	
	AN3140-327	. . LAMP	1	FR	
-15	B-9685-1	LIGHT ASSEMBLY (mission data) (GMC) (72914)	1	QT	

NOTE: The above information has been compiled from 209-54002, page 63 (N change)

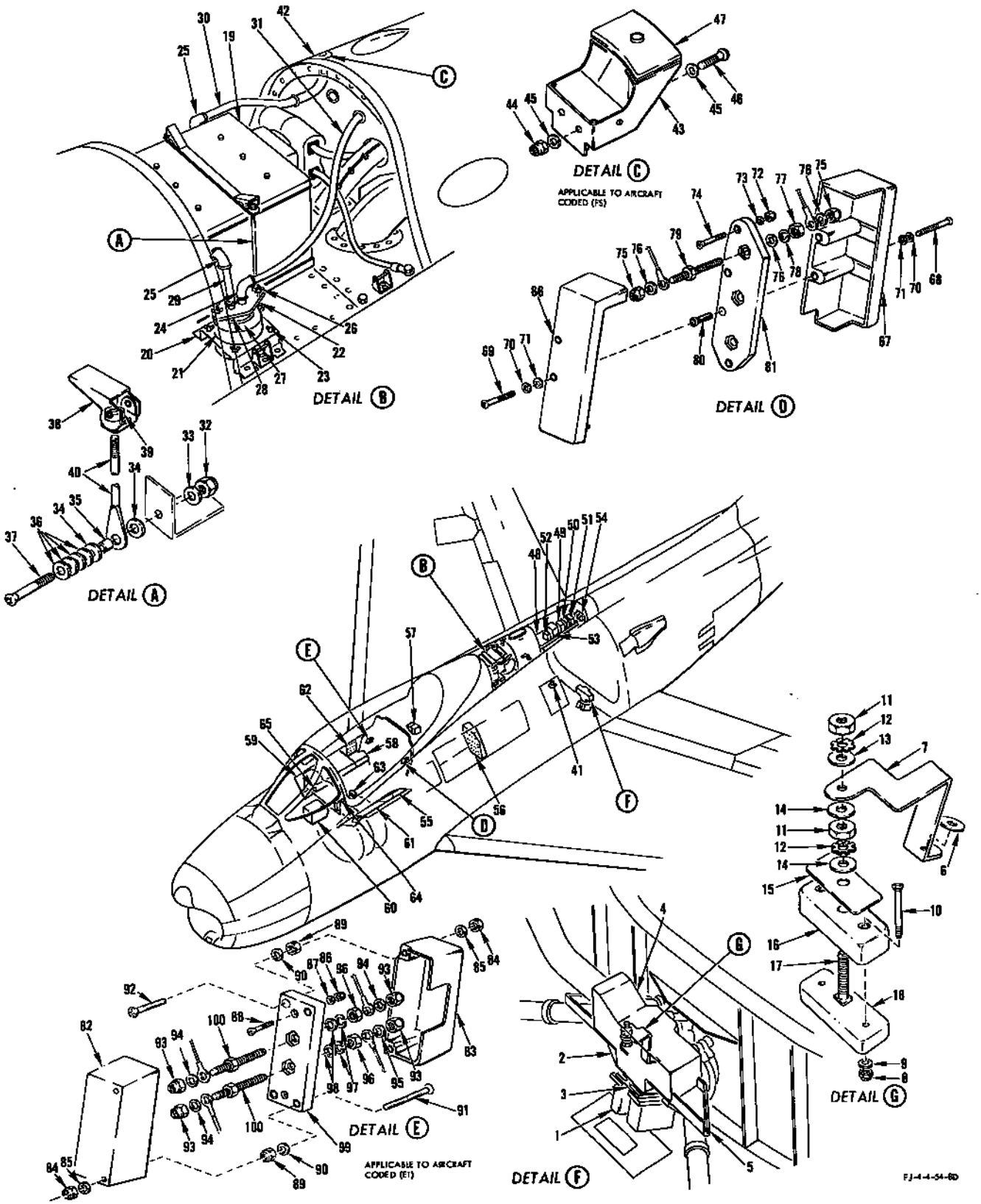

FIGURE 234 - DC POWER AND DISTRIBUTION SYSTEM - APPLICABLE TO AIRCRAFT CODED (ET)

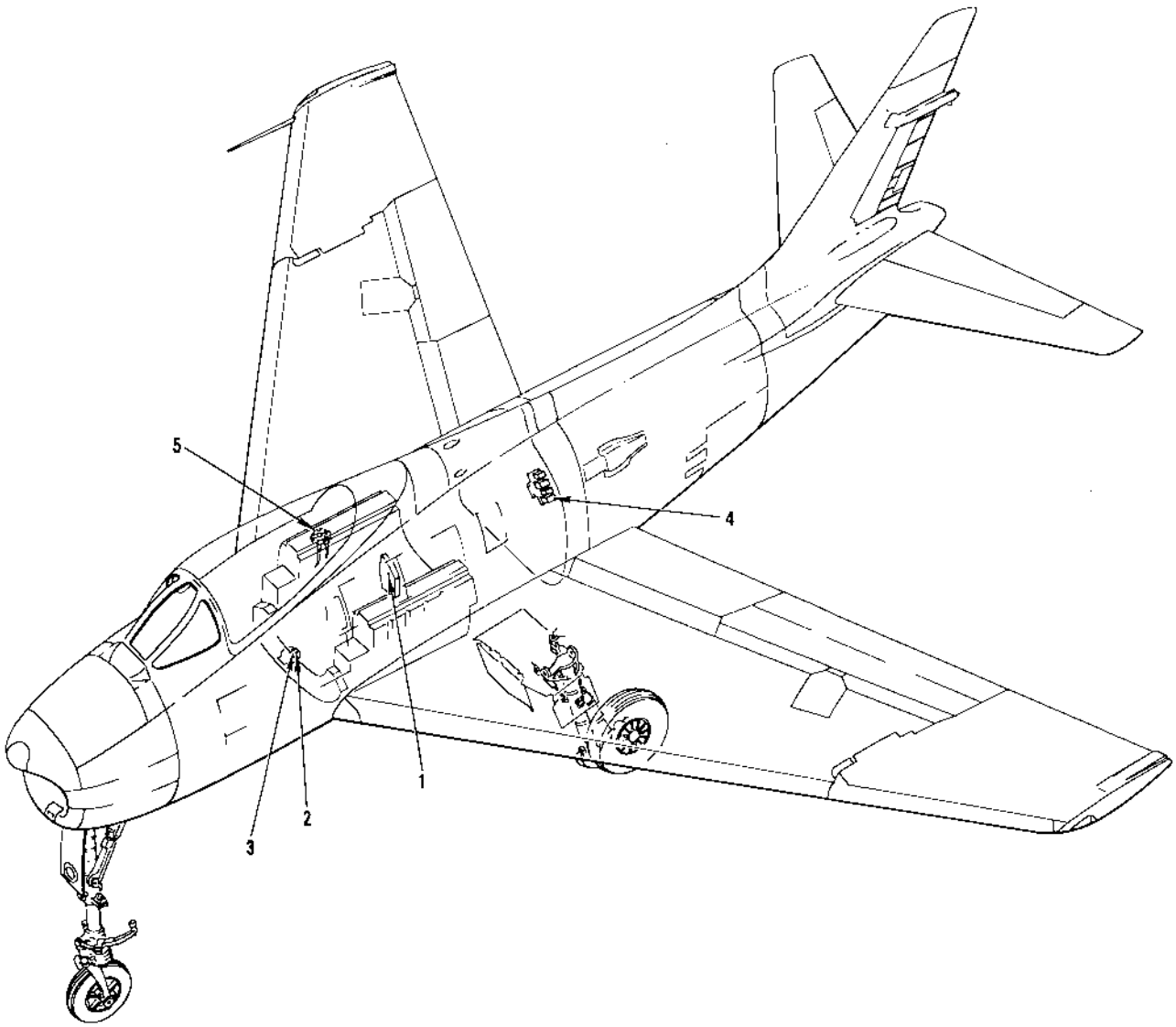

FJ-4B-4-54-23A

FIGURE 237 - DUAL LEVEL FLOAT TEST - APPLICABLE TO AIRCRAFT CODED (ME)

FIGURE & INDEX NO.	PART NUMBER	1 2 3 4 5 6 7 NOMENCLATURE	UNITS PER ASSY.	USABLE ON CODE	S/C NO.
237	209-540110	PANEL ASSEMBLY, Circuit breaker station 156 LH side (see figure 304 for complete breakdown)	1		
-1	MS25017-5	. CIRCUIT BREAKER (float test)	1	ME	
-2	AN3027-7	SWITCH (forward dual level float test)	1	ME	
-3	AN3027-3	SWITCH (buddy tanker level test switch)	1	ME	
-4	209-543168	PANEL ASSEMBLY, Electrical fuselage station 210 (see figure 220 for complete breakdown)	1		
	MS25024-2	. RELAY (dual level and buddy tank float test)	1		
-5	3-254-1	VALVE, Fuel level sensing pilot (SZT) (82267) (dual level float test) (solenoid included in valve) (for breakdown see Technical Manual NA 03-30EB-591)	1		

NOTE: The above information has been compiled from 209-54002, Page 47.1

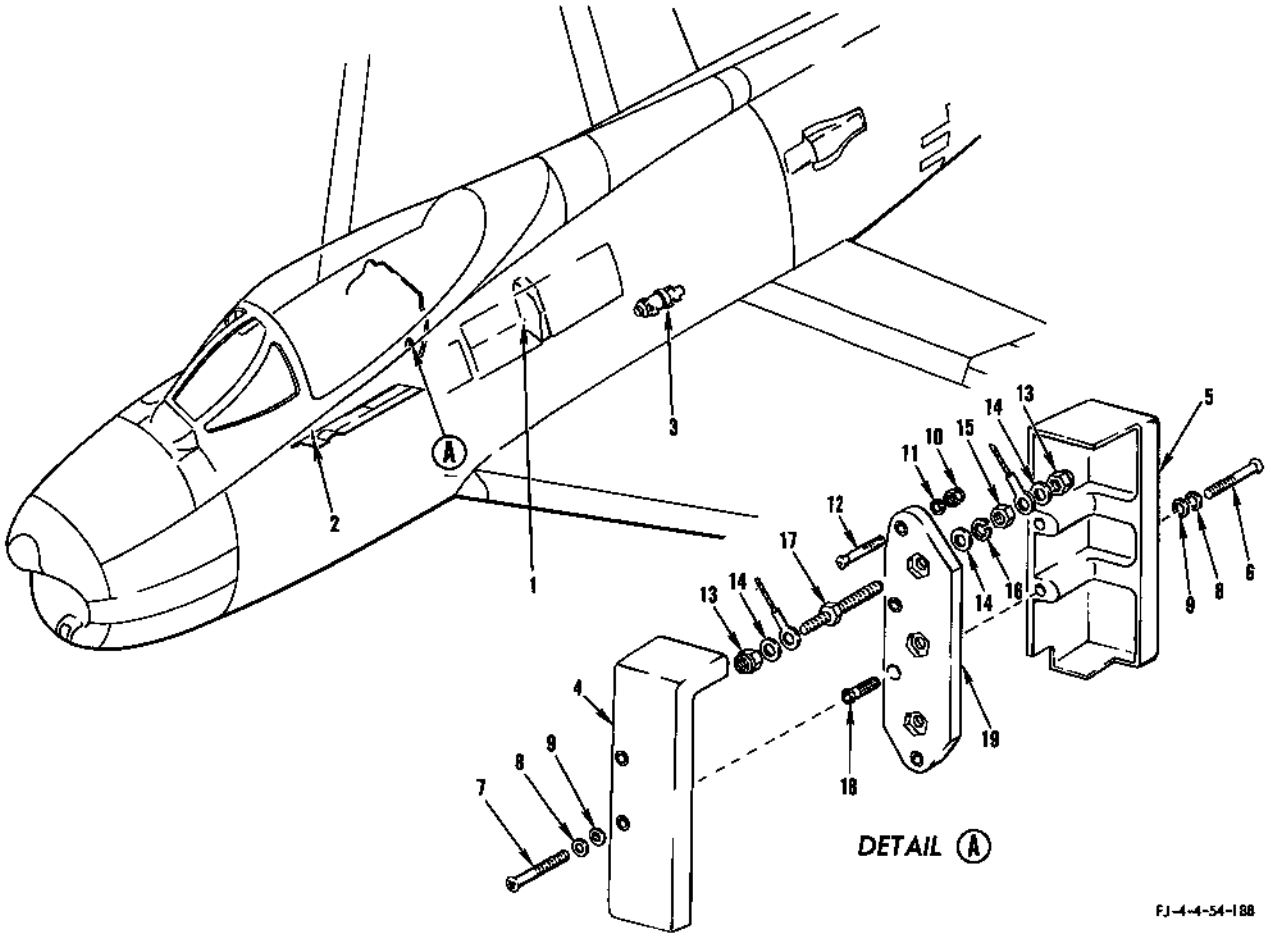

FIGURE 238 - EMERGENCY FLIGHT CONTROL - APPLICABLE TO AIRCRAFT CODED (BJ)

FIGURE & INDEX NO.	PART NUMBER	1 2 3 4 5 6 7 NOMENCLATURE	UNITS PER ASSY.	USABLE ON CODE	S/C NO.
238	209-54170	PANEL ASSEMBLY, Circuit breaker station 156 LH complete (see figure 303 for complete breakdown)	1		
-1	PDLM105	. CIRCUIT BREAKER (emergency flight hydraulic pump) (SPTD) (82647)	1	BJ	366
	209-54115	CONSOLE ASSEMBLY, LH forward (see figure 300 for complete breakdown)	1		
-2	AN3230-2	. SWITCH (emergency flight control)	1	BJ	366
-3	225R0100	MOTOR PUMP ASSEMBLY (emergency flight control) (CNL) (14650) (contains Motor 225G0105-1-0 (CNL) (14650)) (see Hydraulic System)	1	BJ	366
-4	209-54234-3	COVER, Terminal block electrical pressurized	1	BJ	366
-5	209-54234-5	COVER, Terminal block electrical pressurized	1	BJ	366
	ATTACHING PARTS				
-6	AN515-6R20	SCREW	2	BJ	366
-7	AN515-6R18	SCREW	2	BJ	366
-8	2W18-6L	WASHER, Flat (NA) (89372)	4	BJ	366
-9	AN936A6	WASHER	4	BJ	366
	---*---				
	209-54056	TERMINAL ASSEMBLY, Electrical pressure web	1	BJ	366
	ATTACHING PARTS				
-10	AN365-832	NUT	2	BJ	366
-11	2W18-8L	WASHER, Flat (NA) (89372)	2	BJ	366
-12	AN509-8R14	SCREW	2	BJ	366
	---*---				
-13	AN364-624	. NUT	6	BJ	366
-14	2W1B25-20-64	. WASHER, Plain (NA) (89372)	9	BJ	366
-15	AN341-616	. NUT	3	BJ	366
-16	AN935-616	. WASHER	3	BJ	366
	209-54055	. BLOCK ASSEMBLY, Electrical pressurized	1	BJ	366
-17	151-54037-9	. . TERMINAL, Electrical pressurized	3	BJ	366
-18	209-54237	. . INSERT, Threaded	2	BJ	366
-19	209-54055-3	. . BLOCK, Electrical pressurized	1	BJ	366

NOTE: The above information has been compiled from 209-54002, Page 68 (E change)

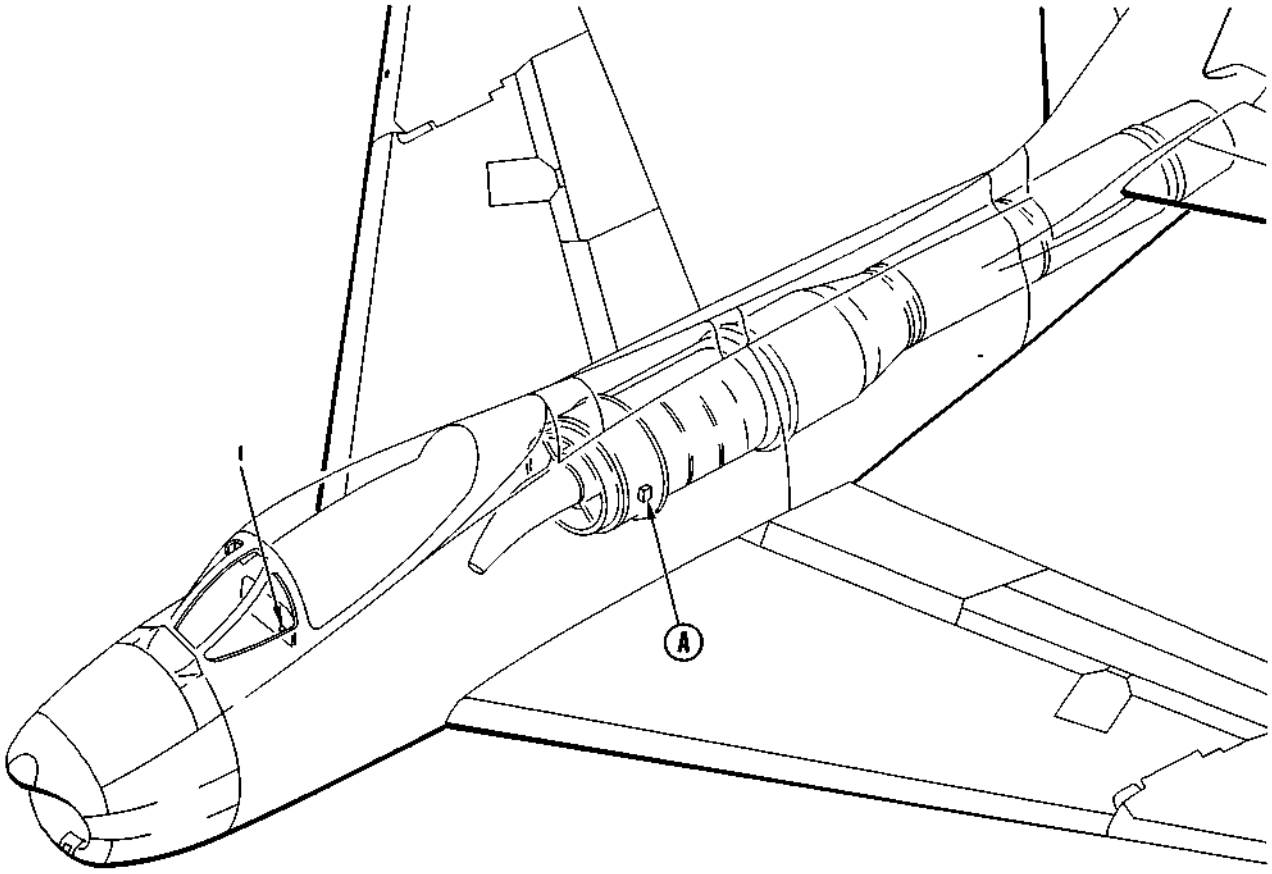

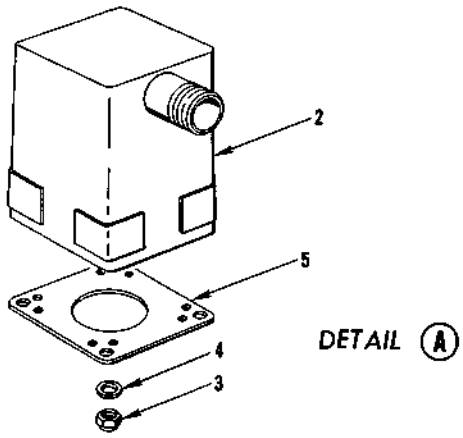

FJ-4-4-54-76

FIGURE 239 - ENGINE TACHOMETER INDICATOR

FIGURE & INDEX NO.	PART NUMBER	1 2 3 4 5 6 7 NOMENCLATURE	UNITS PER ASSY.	USABLE ON CODE	S/C NO.
239	209-51005	PANEL ASSEMBLY, Pilots instruments (see figures 315 and 317 for complete breakdown)	1		
	209-510108	PANEL ASSEMBLY, Pilots instruments (see figure 318 for complete breakdown)	1		
-1	MS28033-1	. INDICATOR (tachometer) (GFP)	1		
-2	AN5544-3	GENERATOR (tachometer) (GFP)	1		
		ATTACHING PARTS			
-3	AN365-428	NUT	4		
-4	2W18-416M	WASHER, Flat (NA) (89372)	4		
		---*---			
-5	AN4045-1	GASKET	1		

NOTE: The above information has been compiled from 209-54002, Page 86 (B change)

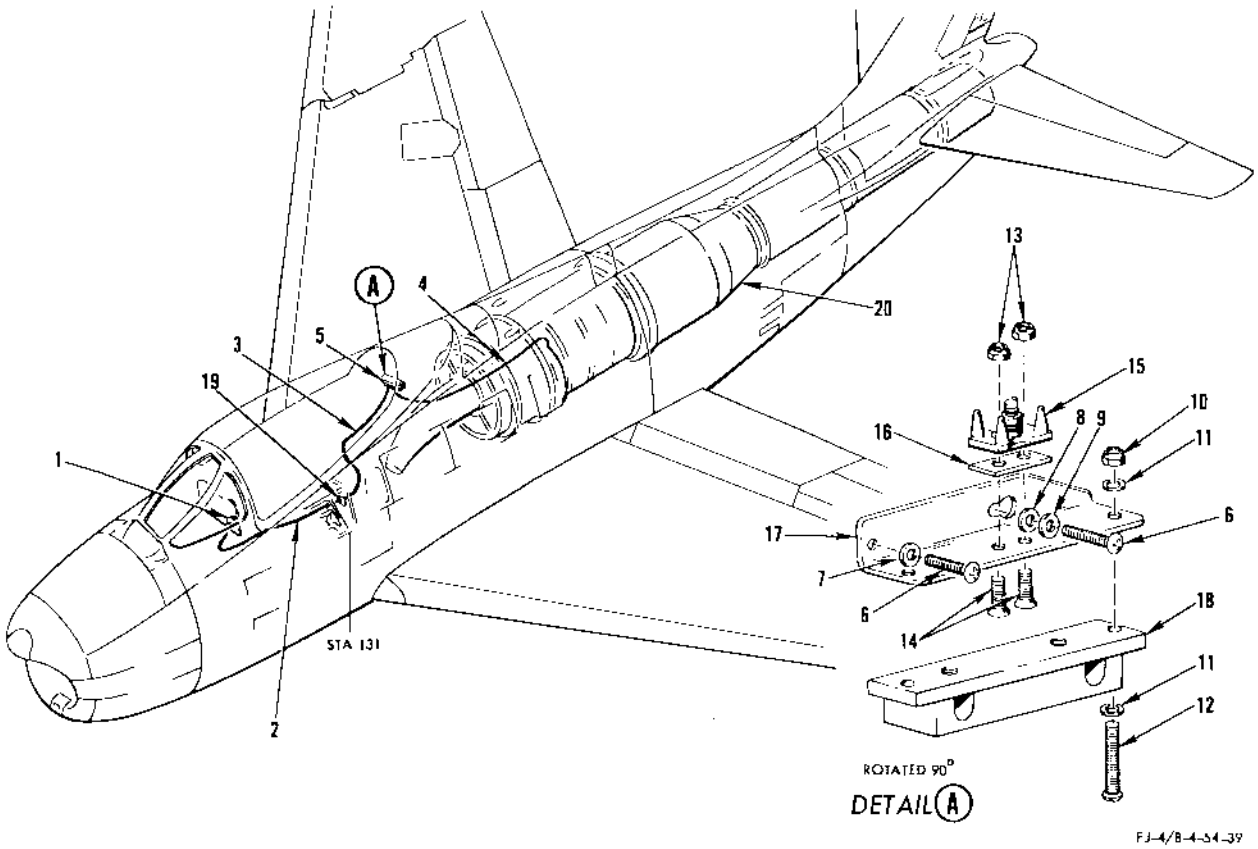

FIGURE 240 - EXHAUST TEMPERATURE INDICATING SYSTEM

FIGURE & INDEX NO.	PART NUMBER	1 2 3 4 5 6 7 NOMENCLATURE	UNITS PER ASSY.	USABLE ON CODE	S/C NO.
240	209-51005	PANEL ASSEMBLY, Pilots instrument complete (see figures 315 and 317 for breakdown)	1		
	209-510108	PANEL ASSEMBLY, Pilots instrument complete (see figure 318 for breakdown)	1		
-1	172B2	. INDICATOR (exhaust temperature) (LEN) (35918) (MIL-I-25026) (for breakdown see Technical Manual NA 05-40DB-507)	1		
-2	181-51041	LEAD ASSEMBLY, Exhaust temperature thermocouple indicator to bulkhead disconnect	1		
-3	209-51141	LEAD ASSEMBLY, Exhaust temperature thermocouple bulkhead disconnect to resistor assembly	1		
-4	209-51040-11	LEAD ASSEMBLY, Exhaust temperature thermocouple resistor assembly to engine (supersedes 209-51040 for future procurement)	1	LE	
	209-51040-21	LEAD ASSEMBLY, Exhaust temperature thermocouple resistor assembly to engine	1	KY	
-5	194-51088	BRACKET ASSEMBLY, Thermocouple resistor instrument	1	LE	
	194-51088-11	BRACKET ASSEMBLY, Thermocouple resistor instrument	1	KY	
	ATTACHING PARTS				
-6	AN515-8R8	SCREW	2		
-7	2W18-8L	WASHER, Flat (NA) (89372)	1		
-8	2W1AL12-12-64	WASHER, Plain (NA) (89372)	1		
-9	2W1AL12-18-32	WASHER, Plain (NA) (89372)	1		
	---*---				
-10	AN365-832	. NUT	2		
-11	2W18-8M	. WASHER, Flat (NA) (89372)	4		
-12	AN515-8R12	. SCREW	2		
-13	AN365-440	. NUT	2		
-14	AN507-440R6	. SCREW	2		
-15	165-51172	. BLOCK ASSEMBLY, Thermocouple terminal	1		
-16	AN3434-1	. STRIP	1		
-17	194-51087	. BRACKET, Thermocouple resistor	1		
-18	AN5534-1	. RESISTOR (thermocouple instrument) (GFP)	1	LE	
	AN5534-1	. RESISTOR (thermocouple instrument)	1	KY	
-19	146-51547	GASKET, Pressure bulkhead thermocouple disconnect plug	1		
-20	J65-W-16A	ENGINE (Wright Aeronautical Corp) (66640) (GFP) (see Power Plant)	1		

NOTE: The above information has been compiled from 209-54002, Page 87 (A change)

EXTERIOR LIGHTING

FIGURE & INDEX NO.	PART NUMBER	1 2 3 4 5 6 7 NOMENCLATURE	UNITS PER ASSY.	USABLE ON CODE	S/C NO.
241	209-54026	CONSOLE ASSEMBLY, RH forward (see figures 305 and 306 for complete breakdown)	1		
-1	91	. CIRCUIT BREAKER (exterior light) (MEH) (76374)	1	ET	
	MS25017-10	. CIRCUIT BREAKER (exterior light)	1	FR	
-2	92	. CIRCUIT BREAKER (fuselage signal light) (MEH) (76374)	1	ET	
	MS25017-15	. CIRCUIT BREAKER (fuselage signal light)	1	FR	
-3	209-54161	BOX ASSEMBLY, Radio compartment electrical junction RH complete (see figures 308 and 309 for complete breakdown)	1		
-4	AN3350-2	. RELAY (fuselage signal light)	1		
-5	G-6080	CONTROL PANEL (exterior light) (GMC) (72914)	1		
-6	AN3158-1	LIGHT ASSEMBLY (tail position) (interchangeable with AN3158-1A)	1		
	ATTACHING PARTS				
-7	AN515R14	SCREW	2		
-8	2W18-4L	WASHER, Flat (NA) (89372)	2		
-9	170-54041	WASHER, Electrical tail position light shockmount	2		
-10	170-54042	GASKET, Electrical tail position light shockmount	1		
	---*---				
-11	AN3124-307	. LAMP	1		
-12	D-5730A5-24	LIGHT ASSEMBLY, Flush formation (GMC) (72914) (supersedes D-5730-5-24 (GMC) (72914) for future procurement)	2		
	ATTACHING PARTS				
	AN507-632R6	SCREW	16		
	---*---				
	313	. LAMP (GE) (24446)	1		
-13	D-6975-1	LIGHT ASSEMBLY, Fuselage (GMC) (72914)	1		
	ATTACHING PARTS				
	AN507-632R8	SCREW	3		
	AN935-6L	WASHER	3		
	AN365-832	NUT	3		
	---*---				
	1048	. LAMP (GMC) (72914)	1		
-14	G-7005-2-24	LIGHT ASSEMBLY, Fuselage signal (GMC) (72914)	1		
	ATTACHING PARTS				
-15	AN507-6R6	SCREW	12		
-16	2W18-6L	WASHER, Flat (NA) (89372)	12		
-17	AN365-632	NUT	12		
	---*---				
-18	AN3120-1047	. LAMP	1		
-19	AN3131-303	. LAMP	1		
-20	D-7670-1	LIGHT ASSEMBLY, Wing tip LH (GMC) (72914)	1		
	D-7670-2	LIGHT ASSEMBLY, Wing tip RH (GMC) (72914)	1		
	ATTACHING PARTS				
	AN520-10R8	SCREW	6		
	2W18-10M	WASHER, Flat (NA) (89372)	6		
	---*---				
-21	7512	. LAMP (GMC) (72914)	1		
-22	194-54029-21	RESISTOR ASSEMBLY, Electrical exterior lighting	1	QX	
	244-54105	RESISTOR ASSEMBLY, Electrical exterior lighting	1	QY	
	ATTACHING PARTS				
-23	AN515-8R8	SCREW	2		
-24	2W1P12-12-31	WASHER, Plain (NA) (89372)	2		
-25	2W18-8L	WASHER, Flat (NA) (89372)	2		
	---*---				
-26	AN365-1032	. NUT	2		
-27	2W18-10L	. WASHER, Flat (NA) (89372)	4		
-28	194-54028-11	. BRACKET ASSEMBLY, Electrical exterior lighting resistor	2		
-29	2W1P13-28-63	. WASHER, Plain (NA) (89372)	4		
-30	6001	. WASHER (OM) (44655)	4		
-31	AN3-36A	. BOLT	2		
-32	AN365-632	. NUT	4		
-33	2W1AL10-12-16	. WASHER, Plain (NA) (89372)	8		
-34	AN515-6R8	. SCREW	4		
-35	RW34G630	. RESISTOR (MIL-R-26B)	1		
-36	RW34G110	. RESISTOR (MIL-R-26B)	1		
-37	194-54064	. SHIELD, External lighting resistor	1		
-38	D-6270-1	FLASHER, External light type F-1 (GMC) (72914) (for breakdown see Technical Manual NA 03-5G-502)	1		
	ATTACHING PARTS				
	AN520-10R8	SCREW	4		
	2W18-10	WASHER, Flat (NA) (89372)	4		
	---*---				
-39	181-54217-1	CONNECTOR ASSEMBLY, Electrical line	4		
-40	181-54217-3	CONNECTOR ASSEMBLY, Electrical line	4		
-41	181-54217-1	CONNECTOR ASSEMBLY, Electrical line	2	Y	
-42	181-54217-3	CONNECTOR ASSEMBLY, Electrical line	2	Y	
-43	AN3027-3	SWITCH (external light signal)	1	FR	
-44	244-54108	RESISTOR ASSEMBLY, Electrical taillight dimming	1	QY	
	ATTACHING PARTS				
-45	AN515-8R10	SCREW	2	QY	
-46	2W18-8M	WASHER, Flat (NA) (89372)	2	QY	
	---*---				
-47	244-541081-11	. RESISTOR SUBASSEMBLY, Electrical taillight dimming	2	QY	
-48	AN365-1032	. NUT	1	QY	
-49	2W18-10M	. WASHER, Flat (NA) (89372)	2	QY	

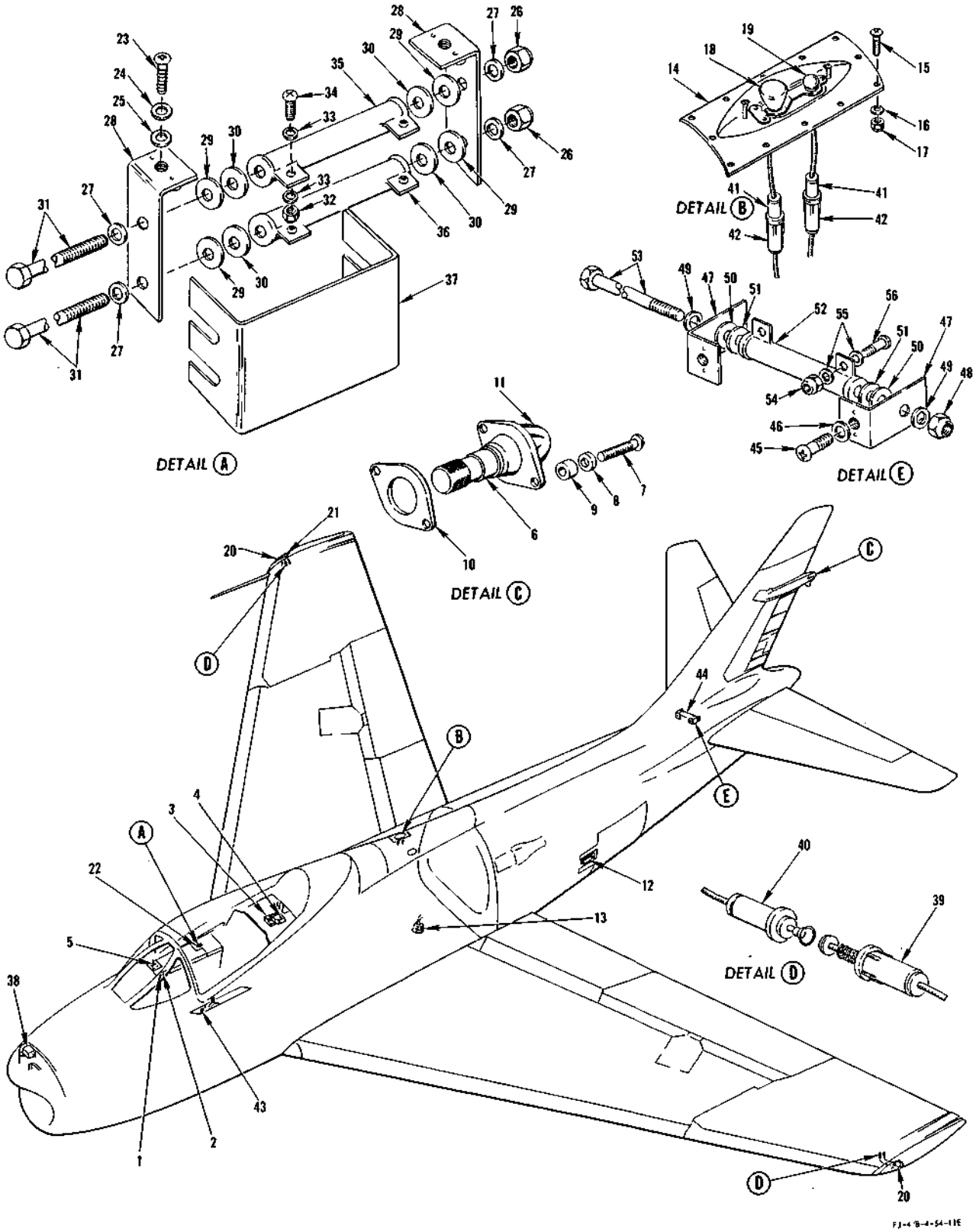

FIGURE 241 - EXTERIOR LIGHTING

EXTERIOR LIGHTING

FIGURE & INDEX NO.	PART NUMBER	1	2	3	4	5	6	7	NOMENCLATURE	UNITS PER ASSY.	USABLE ON CODE	S/C NO.
241-50	2W1P13-28-63	.							WASHER, Plain (NA) (89372)	2	QY	
-51	6000	.							WASHER (OM) (44655)	2	QY	
-52	RW33V180	.							RESISTOR (MIL-R-26C)	1	QY	
-53	AN3-36A	.							BOLT	1	QY	
-54	AN365-632	.							NUT	2	QY	
-55	2W1AL10-12-16	.							WASHER, Plain (NA) (89372)	4	QY	
-56	AN516-6R8	.							SCREW	2	QY	

NOTE: The above information has been compiled from 209-54002, page 76 (L change)

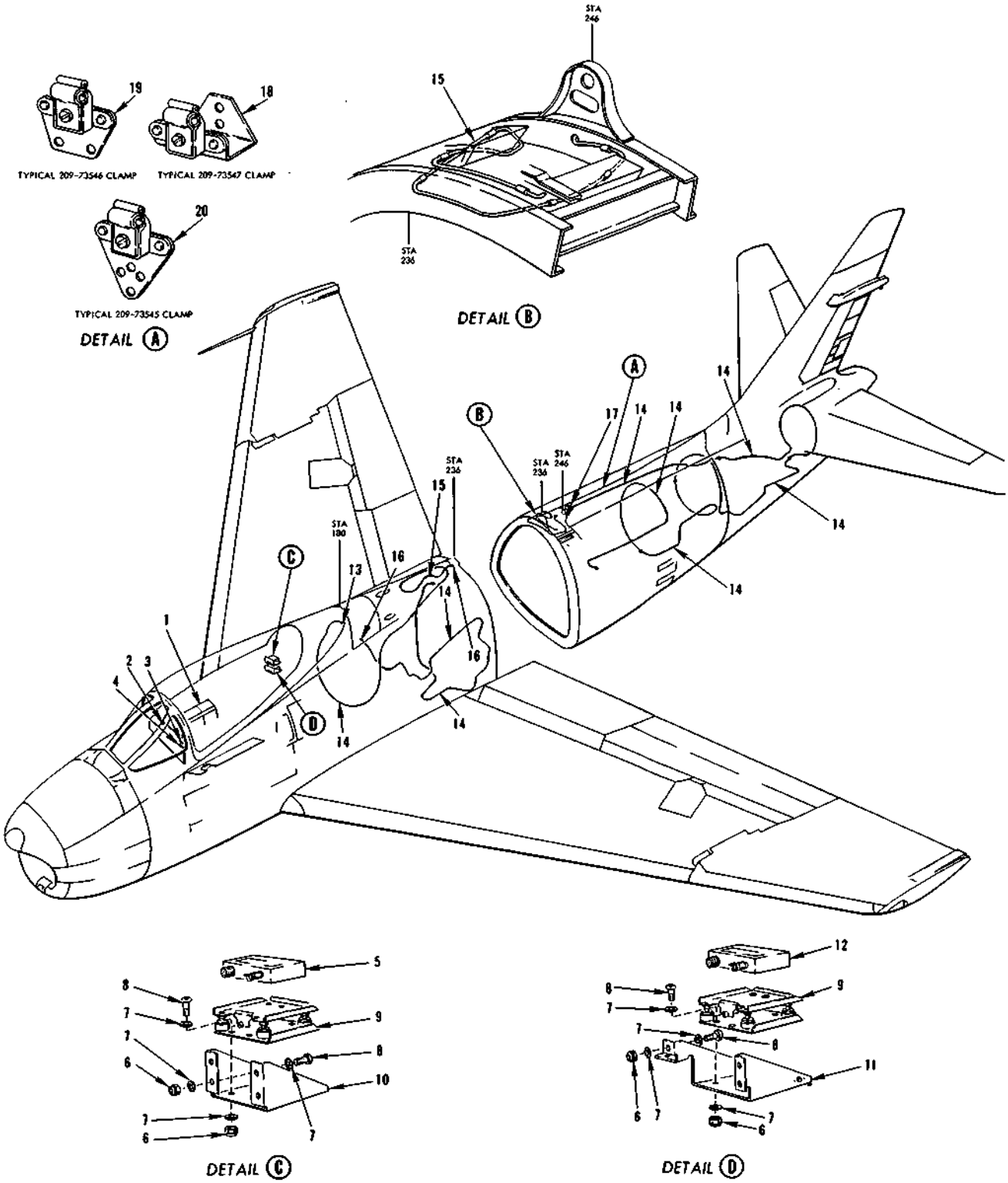

FIGURE 242 - FIRE DETECTOR SYSTEM

FIRE DETECTOR SYSTEM

FIGURE & INDEX NO.	PART NUMBER	1 2 3 4 5 6 7 NOMENCLATURE	UNITS PER ASSY.	USABLE ON CODE	S/C NO.
242-1	209-54026	CONSOLE ASSEMBLY, RH forward (see figures 305 and 306 for complete breakdown)	1		
	14PB1	. SWITCH (warning light test) (MCS) (91929)	1		
	90	. CIRCUIT BREAKER (warning light test switch and rudder pedal shaker) (MEH) (76374)	1	ET	
	MS25017-5	. CIRCUIT BREAKER (warning light test switch and rudder pedal shaker)	1	FR	
	90	. CIRCUIT BREAKER (fire detector power) (MEH) (76374)	1	ET	
	MS25017-5	. CIRCUIT BREAKER (fire detector power)	1	FR	
	209-51005	PANEL ASSEMBLY, Pilots instrument complete (see figures 315 and 317 for complete breakdown)	1		
	209-510108	PANEL ASSEMBLY, Pilots instrument complete (see figure 318 for complete breakdown)	1		
-2	AN3027-6	. SWITCH (fire detector test)	1		
-3	181-540102-9	. CAP ASSEMBLY, Warning light (fire compressor)	1	U	
	204	. BASE (KOR) (81590)	1	U	
	AN3121-313	. LAMP	2	U	
	209-54184-9	. CAP ASSEMBLY, Warning light (fire compressor)	1	V	
	204AH	. BASE (KOR) (81590)	1	V	
	AN3121-313	. LAMP	2	V	
-4	181-540102-11	. CAP ASSEMBLY, Warning light (fire burner)	1	U	
	204	. BASE (KOR) (81590)	1	U	
	AN3121-313	. LAMP	2	U	
	209-54184-11	. CAP ASSEMBLY, Warning light (fire burner)	1	V	
	204AF	. BASE (KOR) (81590)	1	V	
	AN3121-313	. LAMP	2	V	
-5	871315	COMPRESSOR CONTROL UNIT, Continuous resetting type dc operated fire detector (WK) (33525)	1		
-6	AN365-832	NUT	16		
-7	2W18-8M	WASHER, Flat (NA) (89372)	32		
-8	AN515-8R8	SCREW	16		
-9	270877	MOUNT, Continuous resetting type dc operated fire detector (WK) (33525)	2		
-10	209-54116	BRACKET, Fire detector control unit station 131 LH upper electrical	1		
-11	209-54117	BRACKET, Fire detector control unit station 131 LH lower electrical (superseded by 209-54117-11 for future procurement)	1	ET	
	209-54117-11	BRACKET, Fire detector control unit station 131 LH lower electrical (supersedes 209-54117 for future procurement)	1	FR	
-12	871115	BURNER CONTROL UNIT, Continuous resetting type dc operated fire detector (WK) (33525)	1		
-13	840771	ELBOW, Continuous resetting type dc operated fire detector (WK) (33525)	1		
	ATTACHING PARTS				
	AN503-6-4	SCREW	3		
	2W18-6	WASHER, Flat (NA) (89372)	3		
	---*---				
	2L7-2	LUG, Safety (NA) (89372)	1		
-14	809120	ELEMENT, Continuous resetting type dc operated fire detector single contact sensing (WK) (33525)	8		
-15	809060	ELEMENT, Continuous resetting type dc operated fire detector single contact sensing (WK) (33525)	2		
-16	840791	ELBOW, Continuous resetting type dc operated fire detector (WK) (33525)	2		
	ATTACHING PARTS				
	AN503-6-4	SCREW	6		
	2W18-6	WASHER, Flat (NA) (89372)	6		
	---*---				
-17	205703	PLATE, Continuous resetting type dc operated fire detector mounting (WK) (33525)	1		
	205702	CAP, Continuous resetting type dc operated fire detector mounting plate (WK) (33525)	1		
	ATTACHING PARTS				
	AN515-6R6	SCREW	2		
	2W17-6	WASHER, Corrosion-resistant steel (NA) (89372)	2		
	AN363-632	NUT	2		
	---*---				
-18	209-73547	*1 CLAMP ASSEMBLY (supersedes 840747 (WK) (33525) for future procurement)	14		
	209-73547-3	. BRACKET, Clamp	1		
	208428	. CLAMP (WK) (33525)	1		
-19	209-73546	*1 CLAMP ASSEMBLY (supersedes 840746 (WK) (33525) for future procurement)	65		
	209-73546-3	. BRACKET, Clamp	1		
	208428	. CLAMP (WK) (33525)	1		
-20	209-73545	*1 CLAMP ASSEMBLY (supersedes 840745 (WK) (33525) for future procurement)	44		
	209-73545-3	. BRACKET, Clamp	1		
	208428	. CLAMP (WK) (33525)	1		

*1 Quantity accurate for latest configuration of FJ-4/B model only

NOTE: Majority of above information compiled from 209-54002, Page 50 (F change)

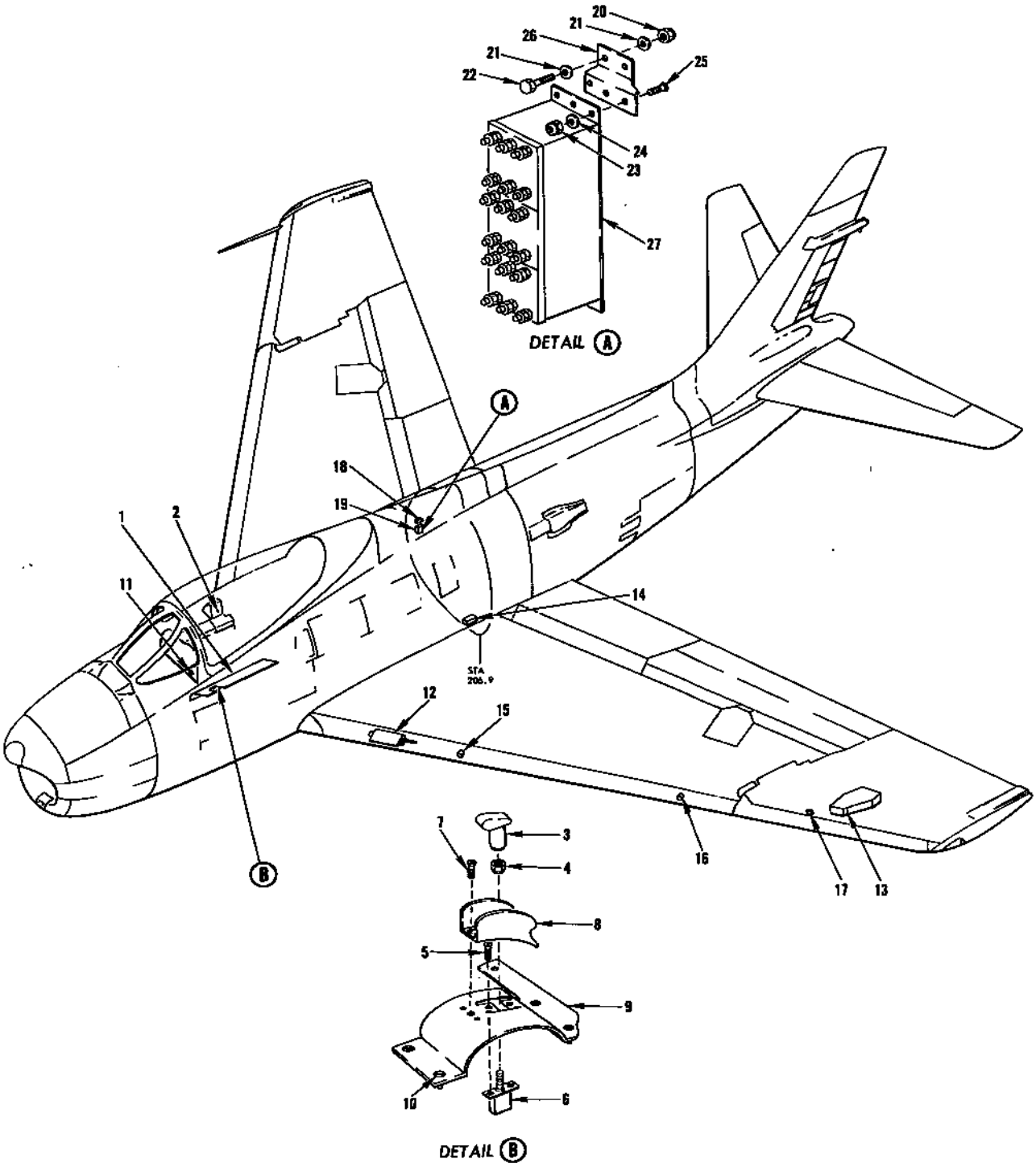

FIGURE 243 - FLAP AND DROOP ACTUATORS - APPLICABLE TO AIRCRAFT CODED (ET)

FLAP AND DROOP ACTUATORS - APPLICABLE TO AIRCRAFT CODED (ET)

FIGURE & INDEX NO.	PART NUMBER	1 2 3 4 5 6 7 NOMENCLATURE	UNITS PER ASSY.	USABLE ON CODE	S/C NO.
243-1	209-54115	CONSOLE ASSEMBLY, LH forward (see figures 300 and 301 for complete breakdown)	1	ET	
	AN3161P20	. CIRCUIT BREAKER (LH droop actuator)	1	ET	
	AN3161P20	. CIRCUIT BREAKER (flap control and RH droop actuator)	1	ET	
	AN3161P35	. CIRCUIT BREAKER (LH flap actuator)	1	ET	
	AN3161P35	. CIRCUIT BREAKER (RH flap actuator)	1	ET	
	209-54189	PANEL ASSEMBLY, Circuit breaker and fuse cockpit RH rear complete (see figure 314 for complete breakdown)	1	ET	
-2	90	. CIRCUIT BREAKER (flap and leading edge droop indicator) (MEH) (76374)	1	ET	
	209-54029	COVER ASSEMBLY, Flap control quadrant close-out	1	ET	
-3	209-54047	. GRIP ASSEMBLY, Electrical wing flap switch	1	ET	
-4	AN316-4R	. NUT	1	ET	
-5	AN507-832R7	. SCREW	2	ET	
-6	8905K838	. SWITCH (flap control) (CUT) (15605)	1	ET	
-7	AN507-832R8	. SCREW	2	ET	
-8	209-54045	. GUARD, Engine control quadrant outboard close-out switch	1	ET	
-9	209-54030	. SUPPORT ASSEMBLY, Flap control mounting	1	ET	
-10	98265-1-.150	. . STUD (UC) (61864)	4	ET	
	209-51005	PANEL ASSEMBLY, Pilots instrument complete (see figures 315 and 317 for complete breakdown)	1	ET	460
-11	8DJ51GBE-4	. INDICATOR (flap position) (GE) (24446)	1	ET	
-12	D-1900	ACTUATOR (LH and RH inboard droop) (HOOV) (81817) (superseded by D-1900-2 (HOOV) (81817) for future procurement) (for breakdown of D-1900 see Technical Manual NA 03-5CHP-510) (see Surface and Secondary Controls)	1	ET	
	D-1900-2	ACTUATOR (LH and RH inboard droop) (HOOV) (81817) (supersedes D-1900 (HOOV) (81817) for future procurement) (see Surface and Secondary Controls)	1	ET	
-13	D-1890	ACTUATOR (LH and RH outboard droop) (HOOV) (81817) (see Surface and Secondary Controls) (for breakdown see Technical Manual NA 03-5CHP-508)	1	ET	
-14	D-1830-2	ACTUATOR (LH and RH flap) (HOOV) (81817) (supersedes D-1830-1 (HOOV) (81817) for future procurement) (see Surface and Secondary Controls)	1	ET	
-15	1EN8-1	SWITCH (droop up) (wing station 77 LH and RH) (MCS) (91929)	2	ET	
-16	1EN8-1	SWITCH (droop up) (wing station 139 LH and RH) (MCS) (91929)	2	ET	
-17	1EN8-1	SWITCH (droop up) (wing station 194 LH and RH) (MCS) (91929)	2	ET	
-18	AN3311-1	RELAY (outboard droop)	1	ET	
	ATTACHING PARTS				
	AN515-8R8	SCREW	2	ET	
	2W18-8L	WASHER, Flat (NA) (89372)	4	ET	
	AN365-832	NUT	2	ET	
	S1-2399-1-Z-N119-3	COVER (LR) (35344) (supersedes S1-2399Z-N119-3 (LR) (35344) for future procurement)	1	ET	
	---*---				
-19	209-54208	COVER, Electrical flap control (RH engine bay)	1	ET	
	ATTACHING PARTS				
	AN520-10R10	SCREW	4	ET	
	2W18-10M	WASHER, Flat (NA) (89372)	4	ET	
	---*---				
	209-54203	RELAY ASSEMBLY, Electrical flap control	1	ET	
	ATTACHING PARTS				
-20	AN365-1032	NUT	4	ET	
-21	2W18-10M	WASHER, Flat (NA) (89372)	8	ET	
-22	AN3-4A	BOLT	4	ET	
	---*---				
-23	AN364-832	. NUT	6	ET	
-24	2W18-8L	. WASHER, Flat (NA) (89372)	6	ET	
-25	AN507-8R5	. SCREW	6	ET	
-26	209-54245	. MOUNTING BRACKET, Electrical flap control relay (RH engine bay)	2	ET	
-27	9244	. RELAY (flap control) (LR) (35344)	1	ET	

NOTE: The above information has been compiled from 209-54002, Page 92 (J change)

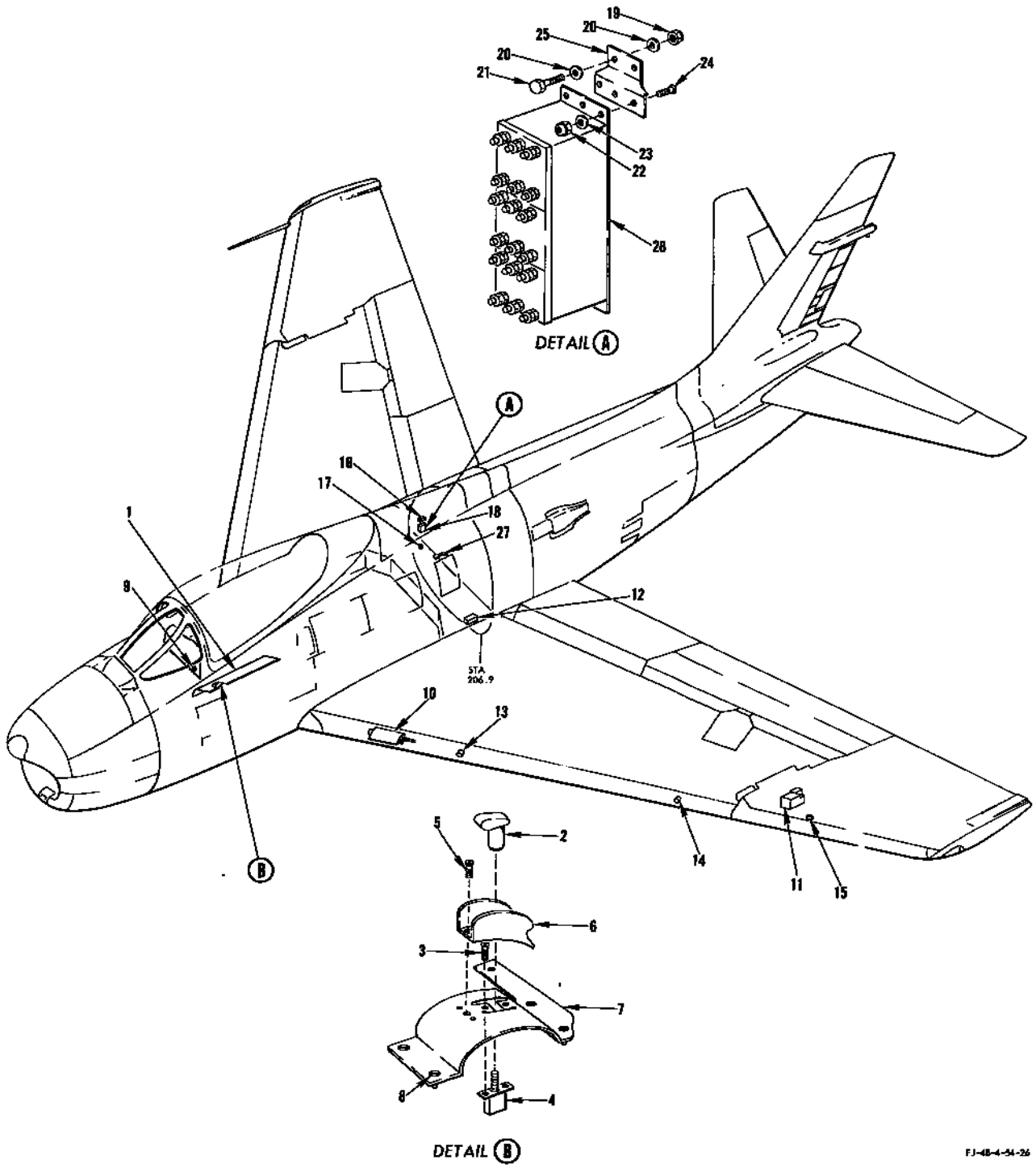

FIGURE 244 - FLAP AND DROOP ACTUATORS - APPLICABLE TO AIRCRAFT CODED (FR)

FLAP AND DROOP ACTUATORS - APPLICABLE TO AIRCRAFT CODED (FR)

FIGURE & INDEX NO.	PART NUMBER	1 2 3 4 5 6 7 NOMENCLATURE	UNITS PER ASSY.	USABLE ON CODE	S/C NO.
244-1	209-54115	CONSOLE ASSEMBLY, LH forward (see figures 300 and 301 for breakdown)	1		
	AN3161P20	. CIRCUIT BREAKER (inboard droop actuator)	1	FR	
	AN3161P20	. CIRCUIT BREAKER (flap control and outboard droop actuator)	1	FR	
	AN3161P35	. CIRCUIT BREAKER (LH flap actuator)	1	FR	
	AN3161P35	. CIRCUIT BREAKER (RH flap actuator)	1	FR	
	MS25017-5	. CIRCUIT BREAKER (flap and leading edge droop indicator)	1	FR	
	209-542121	COVER ASSEMBLY, Electrical flap control quadrant close-out	1	FR	
-2	209-542124	. GRIP ASSEMBLY, Electrical flap switch	1	FR	
-3	AN507-632R7	. SCREW	2	FR	
-4	115AT18	. SWITCH (MCS) (flap control quadrant close-out) (NA Design Dwg 209-954287-71) (supersedes 115AT17 (MCS) for future procurement) (115AT15 (MCS) may be used prior to delivery of 115AT18)	1	FR	
-5	AN507-832R8	. SCREW	2	FR	
-6	209-542123	. GUARD, Electrical engine control quadrant outboard close-out switch	1	FR	
-7	209-54030	. SUPPORT ASSEMBLY, Flap control mounting	1	FR	
-8	98265-1-.150	. . STUD (UC)	4	FR	
	209-510108	PANEL ASSEMBLY, Pilots instrument complete (see figure 318 for breakdown)	1	FR	
-9	8DJ51GBE-4	. . INDICATOR (flap position) (GE) (for breakdown see Technical Manual AN 05-55A-11)	1	FR	
-10	D-1900 *1	ACTUATOR (LH and RH inboard droop) (HOOV) (see Surface and Secondary Controls) (for breakdown see Technical Manual NA 03-5CHP-510)	2	NJ	
	D-1900-2 *1	ACTUATOR (LH and RH inboard droop) (HOOV) (see Surface and Secondary Controls)	2	NK	
-11	D-1900 *1	ACTUATOR (LH and RH outboard droop) (HOOV) (see Surface and Secondary Controls) (for breakdown see Technical Manual NA 03-5CHP-510)	2	NJ	
	D-1900-2 *1	ACTUATOR (LH and RH outboard droop) (HOOV) (see Surface and Secondary Controls)	2	NK	
-12	D-1830-2	ACTUATOR (LH and RH flap) (HOOV) (supersedes D-1830-1 (HOOV) for future procurement) (see Surface and Secondary Controls)	2	FR	
-13	1EN8-1	SWITCH (droop up) (wing station 77 LH and RH) (MCS)	2	FR	
-14	1EN8-1	SWITCH (droop up) (wing station 139 LH and RH) (MCS)	2	FR	
-15	1EN8-1	SWITCH (droop up) (wing station 194 LH and RH) (MCS)	2	FR	
-16	AN3311-2	RELAY (outboard droop)	1	FR	
	ATTACHING PARTS				
	AN515-8R8	SCREW	2	FR	
	2W18-8L	WASHER, Flat (NA)	4	FR	
	AN365-832	NUT	2	FR	
	S1-2399Z-N119-3	COVER (LR)	1	FR	
	---*---				
-17	AN3311-2	RELAY (inboard droop)	1	FR	
	ATTACHING PARTS				
	AN515-8R8	SCREW	2	FR	
	2W18-8L	WASHER, Flat (NA)	4	FR	
	AN365-832	NUT	2	FR	
	S1-2399Z-N119-3	COVER (LR)	1	FR	
	---*---				
-18	209-54208	COVER, Electrical flap control (RH engine bay)	1	FR	
	ATTACHING PARTS				
	AN520-10R10	SCREW	4	FR	
	2W18-10M	WASHER, Flat (NA)	4	FR	
	---*---				
	209-54203	RELAY ASSEMBLY, Electrical flap control	1	FR	
	ATTACHING PARTS				
-19	AN365-1032	NUT	4	FR	
-20	2W18-10M	WASHER, Flat (NA)	8	FR	
-21	AN3-4A	BOLT	4	FR	
	---*---				
-22	AN364-832	. NUT	6	FR	
-23	2W18-8L	. WASHER, Flat (NA)	6	FR	
-24	AN507-8R5	. SCREW	6	FR	
-25	209-54245	. MOUNTING BRACKET, Electrical flap control relay (RH engine bay)	2	FR	
-26	9244	. RELAY (flap control) (LR)	1	FR	
-27	1HS57	SWITCH (mid flap control) (MCS) (see Surface and Secondary Controls for linkage and attaching parts)	2	FR	

NOTE: *1 D-1900-2 (HOOV) supersedes D-1900 (HOOV) for future procurement
The above information has been compiled from 209-54002, Page 92.1 (A change)

ELECTRICAL AND INSTRUMENT

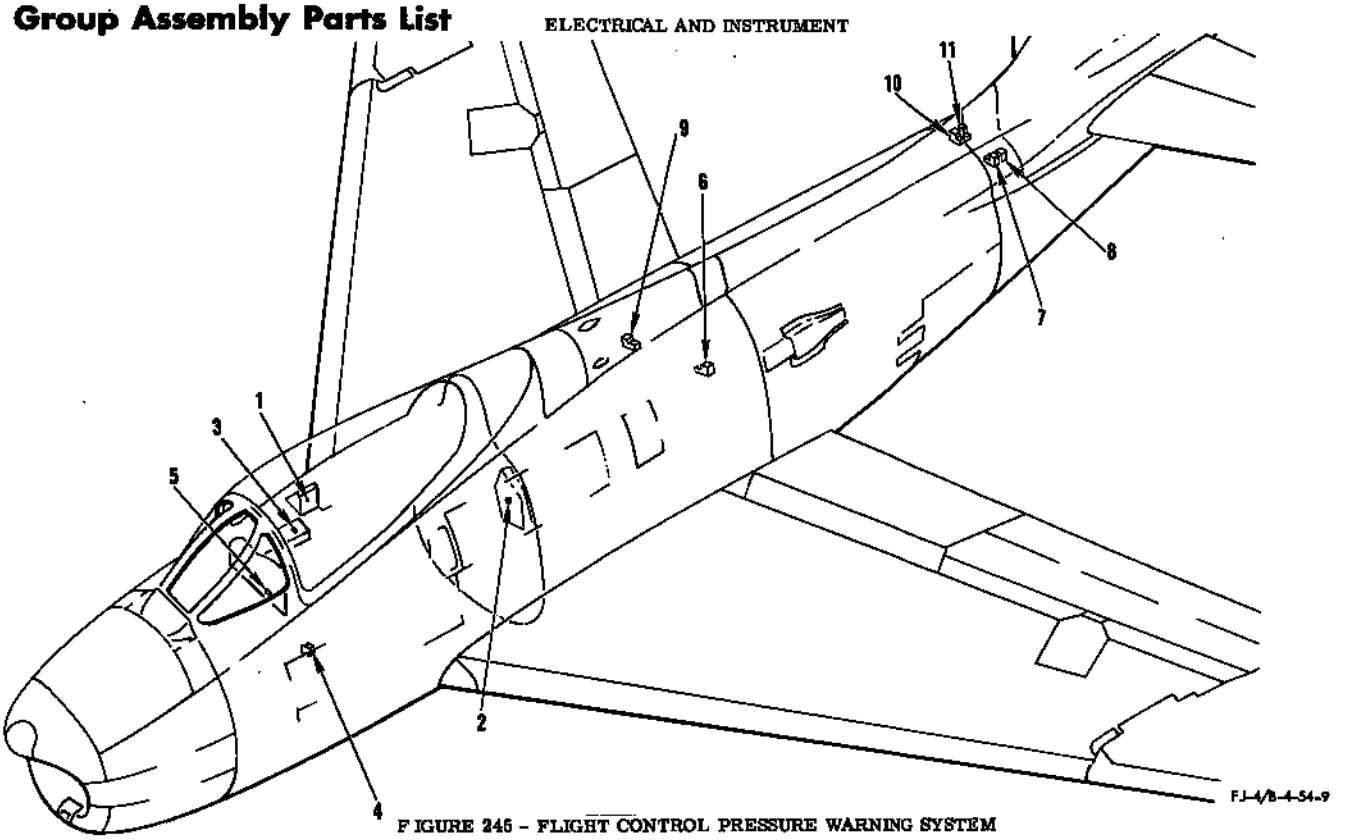

FIGURE 245 - FLIGHT CONTROL PRESSURE WARNING SYSTEM

FIGURE & INDEX NO.	PART NUMBER	1 2 3 4 5 6 7 NOMENCLATURE	UNITS PER ASSY.	USABLE ON CODE	S/C NO.
245	209-54189	PANEL ASSEMBLY, Circuit breaker and fuse cockpit RH rear complete (see figure 314 for complete breakdown)	1		
-1	90	. CIRCUIT BREAKER (ground firing control and flight control pressure warning) (MEH) (76374)	1	DH	
	90	. CIRCUIT BREAKER (flight control pressure warning) (MEH) (76374)	1	HH	
	209-540110	PANEL ASSEMBLY, Circuit breaker station 156 LH side (see figure 304 for complete breakdown)	1		
-2	MS25017-5	. CIRCUIT BREAKER (flight pressure warning)	1	FR	
	209-54026	CONSOLE ASSEMBLY, RH forward (see figures 305 and 306 for complete breakdown)	1		
-3	14PB1	. SWITCH (warning light test) (MCS) (91929)	1		
-4	Model 57	CONTROL UNIT, Warning light dimming (PRJ) (98468) (interchangeable with D-8545-1 (GMC) (72914)	1		
	ATTACHING PARTS				
	AN515-8R8	SCREW	4		
	2W18-8M	WASHER, Flat (NA) (89372)	8		
	AN365-832	NUT	4		
	---*---				
	209-51005	PANEL ASSEMBLY, Pilots instrument complete (see figures 315 and 317 for complete breakdown)	1		
	209-510108	PANEL ASSEMBLY, Pilots instrument complete (see figure 318 for complete breakdown)	1		
-5	181-540102-39	. CAP ASSEMBLY, Warning light (flight control pressure)	1	U	
	209-54184-39	. CAP ASSEMBLY, Warning light (flight control pressure)	1	V	
	204	. BASE (KOR) (81590)	1	U	
	204AC	. BASE (KOR) (81590)	1	V	
	AN3121-313	. LAMP	2		
-6	90000-2	SWITCH, Hydraulic pressure (HYRM) (81873) (No. 1 flight control) (interchangeable with 106130-3 (LADM) (91864) or 4000-24 (Frebank Co) (98087) (see Hydraulic System)	1	ET	
-7	90000-2	SWITCH, Hydraulic pressure (HYRM) (81873) (No. 1 flight control) (interchangeable with 106130-3 (LADM) (91864) or 4000-24 (Frebank Co) (98087) (see Hydraulic System)	1	FR	
-8	90000-12	SWITCH, Hydraulic pressure (HYRM) (81873) (No. 1 flight control) (interchangeable with 2170-2 (Frebank Co) (98087) or 106130-9 (LADM)) (91864) (see Hydraulic System)	1	FR	
-9	90000-2	SWITCH, Hydraulic pressure (HYRM) (81873) (No. 2 flight control) (interchangeable with 106130-3 (LADM) (91864) or 4000-24 (Frebank Co) (98087)) (see Hydraulic System)	1	ET	
-10	90000-12	SWITCH, Hydraulic pressure (HYRM) (81873) (No. 2 flight control) (interchangeable with 2170-2 (Frebank Co) (98087) or 106130-9 (LADM)) (91864) (see Hydraulic System)	1	FR	
-11	90000-2	SWITCH, Hydraulic pressure (HYRM) (81873) (No. 2 flight control) (interchangeable with 106130-3 (LADM) (91864) or 4000-24 (Frebank Co) (98087) (see Hydraulic System)	1	FR	

NOTE: The above information has been compiled from 209-54002. Page 95 (E change)

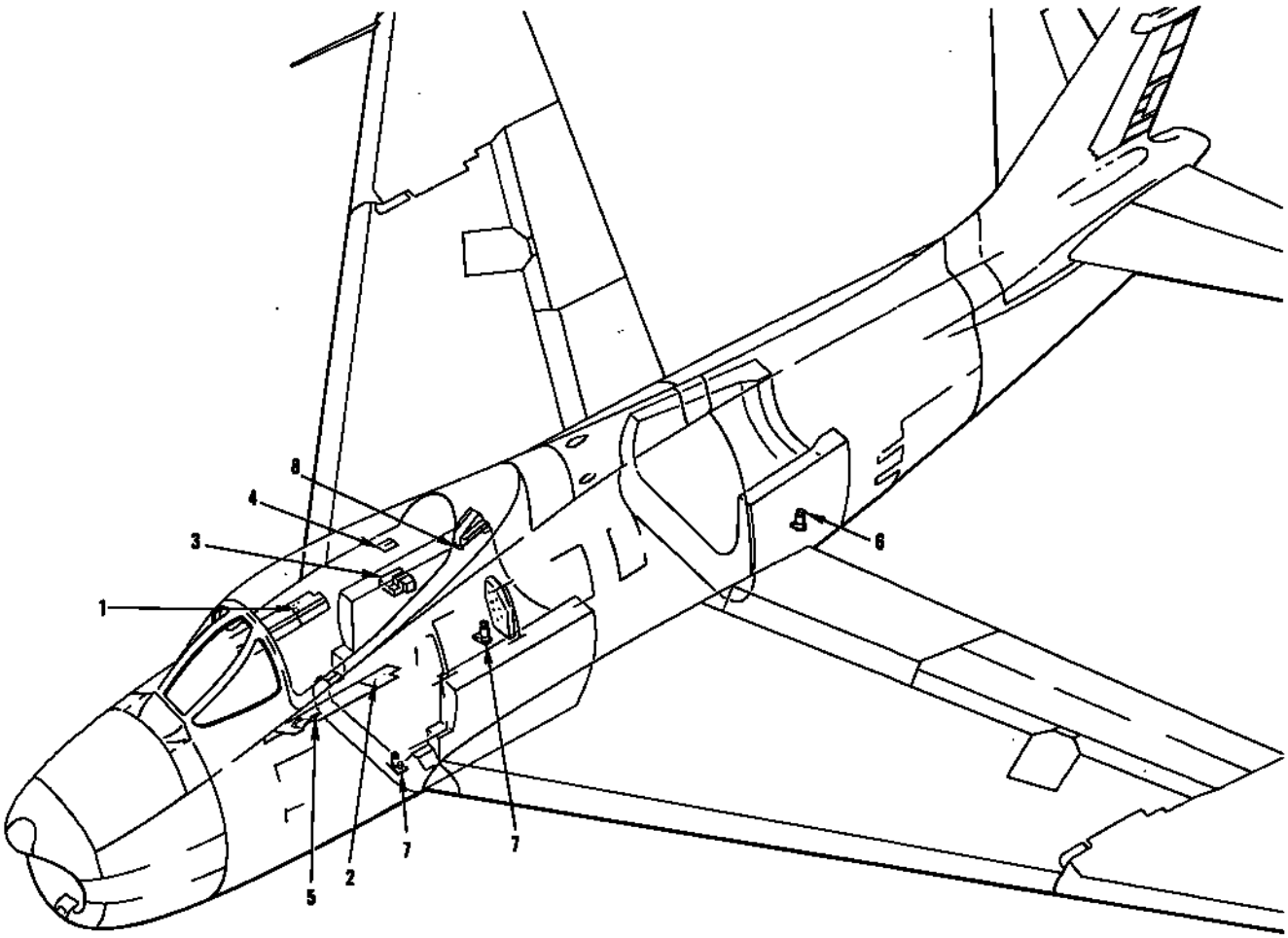

FJ-4/B-4-54-5A

FIGURE 246 - FUEL BOOST PUMP

FIGURE & INDEX NO.	PART NUMBER	1 2 3 4 5 6 7 NOMENCLATURE	UNITS PER ASSY.	USABLE ON CODE	S/C NO.
246-1	209-54458	PANEL ASSEMBLY, Pilots console RH rear (see figure 310 for complete breakdown)	1		
	94	. CIRCUIT BREAKER (forward fuel boost pump) (MEH) (76374)	1	ET	
	94	. CIRCUIT BREAKER (aft fuel boost pump) (MEH) (76374)	1	ET	
-2	209-54249-31	PANEL ASSEMBLY, LH rear console complete (see figure 302 for complete breakdown)	1		
	MS25017-25	. CIRCUIT BREAKER (forward fuel boost pump)	1	FR	
	MS25017-25	. CIRCUIT BREAKER (aft fuel boost pump)	1	FR	
-3	209-54161	BOX ASSEMBLY, Radio compartment electrical junction RH complete (see figure 308 for complete breakdown)	1		
	AN3350-2	. RELAY (aft fuel boost pump)	1		
	AN3350-2	. RELAY (forward fuel boost pump)	1		
-4	209-54108	PANEL ASSEMBLY, Electrical test switches complete (see figure 299 for complete breakdown)	1		
	AN3027-7	. SWITCH (boost pump test)	1		
	209-54115	CONSOLE ASSEMBLY, LH forward (see figure 300 for complete breakdown)	1		
-5	AN3227-3	. SWITCH (engine master)	1		
-6	TB116900	BOOST PUMP (aft fuel) (TP) (59875) (see Fuel System)	1		
	TF59560	. FILTER, Radio noise (furnished as part of boost pump) (TP) (59875)	1		
-7	TB116900	BOOST PUMP (forward fuel) (TP) (59875) (see Fuel System)	2		
	TF59560	. FILTER, Radio noise (furnished as part of boost pump) (TP) (59875)	1		
-8	209-54101	PANEL ASSEMBLY, Canopy deck relay complete (see figure 299 for complete breakdown)	1		
	9220-PM	. RELAY (landing gear downlock) (LR) (35344)	1		

NOTE: The above information has been compiled from 209-54002, Page 75 (G change)

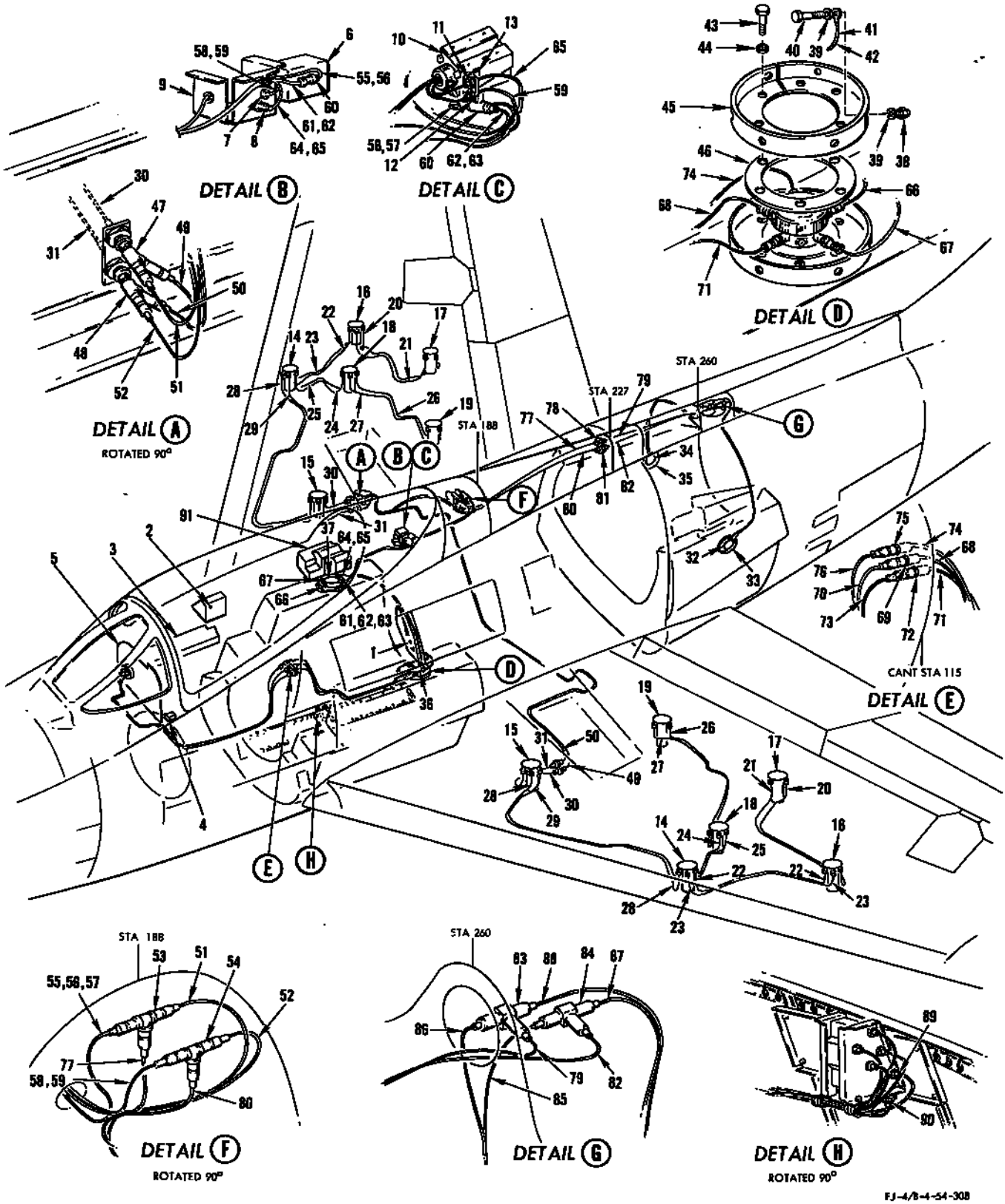

FIGURE 247 - FUEL QUANTITY INDICATING SYSTEM

FUEL QUANTITY INDICATING SYSTEM

FIGURE & INDEX NO.	PART NUMBER	1 2 3 4 5 6 7 NOMENCLATURE	UNITS PER ASSY.	USABLE ON CODE	S/C NO.
247	209-54170	PANEL ASSEMBLY, Circuit breaker station 156 LH side (see figure 303 for complete breakdown)	1		
-1	312001	. FUSE (fuel quantity) (LTF) (75915)	1	ET	
	209-54472	PANEL ASSEMBLY, Circuit breaker and fuse cockpit RH rear complete (see figure 319 for complete breakdown)	1		
-2	312001	. FUSE (fuel quantity) (LTF) (75915)	1	FR	
-3	209-54026	CONSOLE ASSEMBLY, RH forward (see figures 305 and 306 for complete breakdown)	1		
	90	. CIRCUIT BREAKER (instrument lights) (MEH) (76374)	1	ET	
	MS25017-5	. CIRCUIT BREAKER (instrument lights)	1	FR	
	CM11029	. RESISTOR, Variable (instrument lights rheostat) (CLR) (12697)	1		
	14PB1	. SWITCH (warning light test) (MCS) (91929)	1		
-4	Model 57	CONTROL UNIT (warning light dimming) (PRJ) (98468) (interchangeable with D-8545-1 (GMC) (72914))	1		
	ATTACHING PARTS				
	AN515-8R8	SCREW	4		
	2W18-8M	WASHER, Flat (NA) (89372)	8		
	AN365-832	NUT	4		
	---*---				
-5	209-51005	PANEL ASSEMBLY, Pilots instrument complete (see figure 315 for complete breakdown)	1		451
	209-510108	PANEL ASSEMBLY, Pilots instrument complete (see figure 318 for complete breakdown)	1		
	181-540102-15	. CAP ASSEMBLY, Warning light (low fuel)	1	U	
	204	. BASE (KOR) (75397)	1	U	
	AN3121-313	. LAMP	2	U	
	209-54184-15	. CAP ASSEMBLY, Warning light (low fuel)	1	V	
	204AD	. BASE (KOR) (75397)	1	V	
	AN3121-313	. LAMP	2	V	
	AN3027-8	. SWITCH (fuel gage check)	1		
	EA856AA1S-5	. INDICATOR, Power unit combination (fuel capacity) (LI) (36536) (for breakdown see Technical Manual NA 05-65AE-519)	1	EA	397
	EA856FAF-19	. INDICATOR, Power unit combination (fuel capacity) (LI) (36536) (for breakdown see Technical Manual NA 05-65AE-519)	1	GM	451
	EA856MFC-20	. INDICATOR, Power unit combination (fuel capacity) (LI) (36536) (for breakdown see Technical Manual NA 05-65AE-519)	1	MD	
	EA856MFC-27	. INDICATOR, Power unit combination (fuel capacity) (LI) (36536)	1	ME	
	209-51129	PANEL ASSEMBLY, Selector gage instrument relay	1	AT	397
	209-51129-11	PANEL ASSEMBLY, Selector gage instrument relay	1	AU	
-6	G-57361-C	. RELAY (instrument selector gage) (GN) (73949)	1	AT	397
	G-57361-P	. RELAY (instrument selector gage) (GN) (73949)	1	AU	
-7	1-762-1	. RECEPTACLE (DAGE) (95712)	1	Y	
-8	1-311-1	. RECEPTACLE (DAGE) (95712)	1	Y	
-9	209-51128	. BRACKET, Selector gage instrument relay	1	Y	397
-10	G-57361-G	RELAY (instrument selector gage) (GN) (73949)	1	Z	
	ATTACHING PARTS				
	2W18-8	WASHER, Flat (NA) (89372)	4	Z	
	AN365-832	NUT	4	Z	
	---*---				
	209-51167	CLIP ASSEMBLY, Selector gage relay	1	Z	
-11	1-311-1	. RECEPTACLE (DAGE) (95712)	1	Z	
-12	1-762-1	. RECEPTACLE (DAGE) (95712)	1	Z	
-13	209-51163	. CLIP, Selector gage relay assembly of	1	Z	
-14	EA992KM-1216F *1	TANK UNIT (No. 1 wing) (LI) (36536) (superseded by EA992AA-1216 (LI) (36536) for future procurement)	2	AT	397
	EA992AA-1216E *1	TANK UNIT (No. 1 wing) (LI) (36536) (supersedes EA992KM-1216F (LI) (36536) for future procurement)	2	AT	397
	EA992GPM-1476 *1	TANK UNIT (No. 1 wing) (LI) (36536)	2	CQ	
	HT4M-5	BOLT (HIS) (73197)	18		
	MS29513-149	PACKING	2		
-15	EA992NM-1215F *1	TANK UNIT (No. 2 wing) (LI) (36536) (superseded by EA992AB-1215E (LI) (36536) for future procurement)	2	AT	397
	EA992AB-1215E *1	TANK UNIT (No. 2 wing) (LI) (36536) (supersedes EA992NM-1215F (LI) (36536) for future procurement)	2	AT	397
	EA992GPL-1477 *1	TANK UNIT (No. 2 wing) (LI) (36536)	2	CG	
	HT4M-5	BOLT (HIS) (73197)	16		
	MS29513-142	PACKING	2		
-16	EA992NM-1217E *1	TANK UNIT (No. 3 wing) (LI) (36536) (superseded by EA992AB-1217E (LI) (36536) for future procurement)	2	AT	397
	EA992AB-1217E *1	TANK UNIT (No. 3 wing) (LI) (36536) (supersedes EA992NM-1217E (LI) (36536) for future procurement)	2	AT	397
	EA992GPL-1478 *1	TANK UNIT (No. 3 wing) (LI) (36536)	2	CG	
	HT4M-5	BOLT (HIS) (73197)	16		
	MS29513-142	PACKING	2		
-17	EA992LM-1218F *1	TANK UNIT (No. 4 wing) (LI) (36536) (superseded by EA992AC-1218E (LI) (36536) for future procurement)	2	AT	397
	EA992AC-1218E *1	TANK UNIT (No. 4 wing) (LI) (36536) (supersedes EA992LM-1218F (LI) (36536) for future procurement)	2	AT	397
	EA992GPK-1479 *1	TANK UNIT (No. 4 wing) (LI) (36536)	2	CG	
	HT4M-5	BOLT (HIS) (73197)	16		
	MS29513-142	PACKING	2		
-18	EA992NM-1219F *1	TANK UNIT (No. 5 wing) (LI) (36536) (superseded by EA992AB-1219E (LI) (36536) for future procurement)	2	AT	397

FUEL QUANTITY INDICATING SYSTEM

FIGURE & INDEX NO.	PART NUMBER	1 2 3 4 5 6 7	NOMENCLATURE	UNITS PER ASSY.	USABLE ON CODE	S/C NO.
247	EA992AB-1219E	*1	TANK UNIT (No. 5 wing) (LI) (36536) (supersedes EA992NM-1219F (LI) (36536) for future procurement)	2	AT	397
	EA992GPL-1480	*1	TANK UNIT (No. 5 wing) (LI) (36536)	2	CG	
	HT4M-5		BOLT (HIS) (73197)	16		
	MS29513-142		PACKING	2		
-19	EA992LM-1220F	*1	TANK UNIT (No. 6 wing) (LI) (36536) (superseded by EA992AC-1220E (LI) (36536) for future procurement)	2	AT	397
	EA992AC-1220E	*1	TANK UNIT (No. 6 wing) (LI) (36536) (supersedes EA992LM-1220F (LI) (36536) for future procurement)	2	AT	397
	EA992GPK-1481	*1	TANK UNIT (No. 6 wing) (LI) (36536)	2	CG	
	HT4M-13		BOLT (HIS) (73197)	16		
	MS29513-142		PACKING	2		
-20	209-51051-35		CABLE ASSEMBLY (wing tank unit No. 3 to wing tank unit No. 4) (clear jacket)	2	AT	397
	209-51051-135		CABLE ASSEMBLY (wing tank unit No. 3 to wing tank unit No. 4) (clear jacket)	2	CG	
-21	209-51051-37		CABLE ASSEMBLY (wing tank unit No. 3 to wing tank unit No. 4) (yellow jacket)	2	AT	397
	209-51051-137		CABLE ASSEMBLY (wing tank unit No. 3 to wing tank unit No. 4) (yellow jacket)	2	CG	
-22	209-51051-31		CABLE ASSEMBLY (wing tank unit No. 1 to wing tank unit No. 3) (clear jacket)	2	AT	397
	209-51051-131		CABLE ASSEMBLY (wing tank unit No. 1 to wing tank unit No. 3) (clear jacket)	2	CG	
-23	209-51051-33		CABLE ASSEMBLY (wing tank unit No. 1 to wing tank unit No. 3) (yellow jacket)	2	AT	397
	209-51051-133		CABLE ASSEMBLY (wing tank unit No. 1 to wing tank unit No. 3) (yellow jacket)	2	CG	
-24	209-51051-23		CABLE ASSEMBLY (wing tank unit No. 1 to wing tank unit No. 5) (clear jacket)	2	AT	397
	209-51051-123		CABLE ASSEMBLY (wing tank unit No. 1 to wing tank unit No. 5) (clear jacket)	2	CG	
-25	209-51051-25		CABLE ASSEMBLY (wing tank unit No. 1 to wing tank unit No. 5) (yellow jacket)	2	AT	397
	209-51051-125		CABLE ASSEMBLY (wing tank unit No. 1 to wing tank unit No. 5) (yellow jacket)	2	CG	
-26	209-51051-27		CABLE ASSEMBLY (wing tank unit No. 5 to wing tank unit No. 6) (clear jacket)	2	AT	397
	209-51051-127		CABLE ASSEMBLY (wing tank unit No. 5 to wing tank unit No. 6) (clear jacket)	2	CG	
-27	209-51051-29		CABLE ASSEMBLY (wing tank unit No. 5 to wing tank unit No. 6) (yellow jacket)	2	AT	397
	209-51051-129		CABLE ASSEMBLY (wing tank unit No. 5 to wing tank unit No. 6) (yellow jacket)	2	CG	
-28	209-51051-19		CABLE ASSEMBLY (wing tank unit No. 1 to wing tank unit No. 2) (clear jacket)	2	AT	397
	209-510102-1		CABLE ASSEMBLY (wing tank unit No. 1 to wing tank unit No. 2) (clear jacket)	2	RP	
	209-51051-193		CABLE ASSEMBLY (wing tank unit No. 1 to wing tank unit No. 2) (clear jacket)	2	HD	
	209-51051-293		CABLE ASSEMBLY (wing tank unit No. 1 to wing tank unit No. 2) (clear jacket)	2	AT	397
-29	209-510102-11		CABLE ASSEMBLY (wing tank unit No. 1 to wing tank unit No. 2) (yellow jacket)	2	RP	
	209-51051-195		CABLE ASSEMBLY (wing tank unit No. 1 to wing tank unit No. 2) (yellow jacket)	2	HD	
	209-51051-295		CABLE ASSEMBLY (wing tank unit No. 1 to wing tank unit No. 2) (yellow jacket)	2	FR	
-30	209-51051-15		CABLE ASSEMBLY (front spar strut well to wing tank unit No. 2) (clear jacket)	2	AT	397
	209-51051-115		CABLE ASSEMBLY (front spar strut well to wing tank unit No. 2) (clear jacket)	2	CG	
-31	209-51051-17		CABLE ASSEMBLY (front spar strut well to wing tank unit No. 2) (yellow jacket)	2	AT	397
	209-51051-117		CABLE ASSEMBLY (front spar strut well to wing tank unit No. 2) (yellow jacket)	2	CG	
-32	EA940H-1211E	*2	TANK UNIT (aft fuselage fuel cell LH) (LI) (36536) (supersedes EA940CM-1211 (LI) (36536) for future proc) (intchg with EA940G-1211F (LI) (36536))	1	AT	397
	EA940G-1211F	*2	TANK UNIT (aft fuselage fuel cell LH) (LI) (36536) (interchangeable with EA940H-1211E (LI) (36536))	1	AT	397
	EA804FMK-1474	*2	TANK UNIT (aft fuselage fuel cell LH) (LI) (36536)	1	CG	
	AN4H5A		BOLT	7		
	2W18-416		WASHER, Flat (NA) (89372)	7		
	MS29513-232		PACKING	1		
-33	209-51600-1		ADAPTER ASSEMBLY, Aft fuselage cell probe LH	1		
	ATTACHING PARTS					
	AN4-5A		BOLT	9		
	AN4-6A		BOLT	1		
	2W18-416M		WASHER, Flat (NA) (89372)	10		
	MS29513-261		PACKING	1		
	---*---					
	1191-4CNx-1/2		. INSERT, Heli-coil (AF) (91767)	7		
-34	EA940H-1347E	*2	TANK UNIT (aft fuselage fuel cell RH) (LI) (36536) (supersedes EA940CM-1347 (LI) (36536) for future procurement) (interchangeable with EA940G-1347F (LI) (36536))	1	AT	397
	EA940G-1347F	*2	TANK UNIT (aft fuselage fuel cell RH) (LI) (36536) (interchangeable with EA940H-1347E (LI) (36536))	1	AT	397
	EA804FMK-1474	*2	TANK UNIT (aft fuselage fuel cell RH) (LI) (36536)	1	CG	
	AN4H5A		BOLT	7		
	2W18-416		WASHER, Flat (NA) (89372)	7		
	MS29513-232		PACKING	1		
-35	209-51600-2		ADAPTER ASSEMBLY, Aft fuselage cell probe RH	1		
	ATTACHING PARTS					
	AN4-5A		BOLT	9		
	AN4-6A		BOLT	1		
	2W18-416M		WASHER, Flat (NA) (89372)	10		
	MS29513-261		PACKING	1		
	---*---					
	1191-4CNx-1/2		. INSERT, Heli-coil (AF) (91767)	7		
-36	EA941DM-1214F	*2	TANK UNIT (forward fuselage fuel cell LH) (LI) (36536) (superseded by EA941G-1214E (LI) (36536) for future procurement)	1	AT	397
	EA941G-1214E	*2	TANK UNIT (forward fuselage fuel cell LH) (LI) (36536) (supersedes EA941DM-1214F (LI) (36536) for future procurement)	1	AT	397
	EA805FMM-1472	*2	TANK UNIT (forward fuselage fuel cell LH) (LI) (36536)	1	CG	
	MS29513-234		PACKING	1		
-37	EA941FM-1213F	*2	TANK UNIT (forward fuselage fuel cell RH) (LI) (36536) (superseded by EA941H-1213E (LI) (36536) for future procurement)	1	AT	397
	EA941H-1213E	*2	TANK UNIT (forward fuselage fuel cell RH) (LI) (36536) (supersedes EA941FM-1213F (LI) (36536) for future procurement)	1	AT	397
	EA804FML-1473	*2	TANK UNIT (forward fuselage fuel cell RH) (LI) (36536)	1	CG	

FUEL QUANTITY INDICATING SYSTEM

FIGURE & INDEX NO.	PART NUMBER	1 2 3 4 5 6 7 NOMENCLATURE	UNITS PER ASSY.	USABLE ON CODE	S/C NO.
247	MS29513-234	PACKING	1		
-38	AN365-1032	NUT	12		
-39	2W18-10	WASHER, Flat (NA) (89372)	22		
	2W18-10L	WASHER, Flat (NA) (89372) (use two on each jumper)	4		
-40	AN3-5A	BOLT	12		
-41	AN749-3-5	JUMPER (use on RH forward tank unit only)	1		
-42	AN749-3-3	JUMPER (use on LH forward tank unit only)	1		
-43	AN4H5A	BOLT	12		
-44	2W18-416L	WASHER, Flat (NA) (89372)	12		
-45	209-51055	SUPPORT, Forward fuselage cell fuel gage adapter	2		
-46	209-51056	GASKET, Forward fuselage cell fuel gage hydraulic	2		
-47	S47TH	TEE CONNECTOR (LI) (36536)	1	AT	397
	1-332-1	TEE CONNECTOR (DAGE) (95712)	1	CG	
-48	S47TL	TEE CONNECTOR (LI) (36536)	1	AT	397
	1-333-1	TEE CONNECTOR (DAGE) (95712)	1	CG	
-49	209-51051-39	CABLE ASSEMBLY (RH wing strut well to LH wing strut well) (clear jacket)	1	AT	397
	209-51051-139	CABLE ASSEMBLY (RH wing strut well to LH wing strut well) (clear jacket)	1	CG	
-50	209-51051-41	CABLE ASSEMBLY (RH wing strut well to LH wing strut well) (yellow jacket)	1	AT	397
	209-51051-141	CABLE ASSEMBLY (RH wing strut well to LH wing strut well) (yellow jacket)	1	CG	
-51	209-51051-11	CABLE ASSEMBLY (tee connector fuselage station 190 to RH wing strut well) (clear jacket)	1	AT	397
	209-51051-111	CABLE ASSEMBLY (tee connector fuselage station 190 to RH wing strut well) (clear jacket)	1	CG	
-52	209-51051-13	CABLE ASSEMBLY (tee connector fuselage station 190 to RH wing strut well) (yellow jacket)	1	AT	397
	209-51051-113	CABLE ASSEMBLY (tee connector fuselage station 190 to RH wing strut well) (yellow jacket)	1	CG	
-53	S32TH	TEE CONNECTOR (LI) (36536)	1	AT	397
	1-709-1	TEE CONNECTOR (DAGE) (95712)	1	CG	
-54	S32TL	TEE CONNECTOR (LI) (36536)	1	AT	397
	1-708-1	TEE CONNECTOR (DAGE) (95712)	1	CG	
-55	209-51051-97	CABLE ASSEMBLY (selector relay to tee connector fuselage station 190) (clear jacket)	1	AT	397
-56	209-51051-197	CABLE ASSEMBLY (selector relay to tee connector fuselage station 190) (clear jacket)	1	GM	
-57	209-51051-297	CABLE ASSEMBLY (selector relay to tee connector fuselage station 190) (clear jacket)	1	FR	
-58	209-51051-99	CABLE ASSEMBLY (selector relay to tee connector fuselage station 190) (yellow jacket)	1	AT	397
-59	209-51051-199	CABLE ASSEMBLY (selector relay to tee connector fuselage station 190) (yellow jacket)	1	CG	
-60	1-332-1	TEE CONNECTOR (DAGE) (95712)	1		
-61	209-51051-243	CABLE ASSEMBLY (RH forward fuselage tank unit to selector relay) (clear jacket)	1	AT	397
-62	209-51051-143	CABLE ASSEMBLY (RH forward fuselage tank unit to selector relay) (clear jacket)	1	RU	
-63	209-51051-343	CABLE ASSEMBLY (RH forward fuselage tank unit to selector relay) (clear jacket)	1	V	
-64	209-51051-245	CABLE ASSEMBLY (RH forward fuselage tank unit to selector relay) (yellow jacket)	1	AT	397
-65	209-51051-145	CABLE ASSEMBLY (RH forward fuselage tank unit to selector relay) (yellow jacket)	1	CG	
-66	209-51051-47	CABLE ASSEMBLY (LH forward fuselage tank unit to RH forward fuselage tank unit) (clear jacket)	1	AT	397
	209-51051-147	CABLE ASSEMBLY (LH forward fuselage tank unit to RH forward fuselage tank unit) (clear jacket)	1	CG	
-67	209-51051-49	CABLE ASSEMBLY (LH forward fuselage tank unit to RH forward fuselage tank unit) (yellow jacket)	1	AT	397
	209-51051-149	CABLE ASSEMBLY (LH forward fuselage tank unit to RH forward fuselage tank unit) (yellow jacket)	1	CG	
-68	209-51051-7	CABLE ASSEMBLY (fuselage station 115 to LH forward fuselage tank unit) (clear jacket)	1	AT	397
	209-51051-107	CABLE ASSEMBLY (fuselage station 115 to LH forward fuselage tank unit) (clear jacket)	1	CG	
-69	S27BH	BULKHEAD CONNECTOR (LI) (36536)	1	AT	397
	1-737-1	BULKHEAD CONNECTOR (DAGE) (95712)	1	RX	
	1-809-1	BULKHEAD CONNECTOR (DAGE) (95712)	1	RY	
	1-891-1	BULKHEAD CONNECTOR (DAGE) (95712)	1	DB	
-70	209-51051-3	CABLE ASSEMBLY (indicator power unit combination to fuselage station 115) (clear jacket)	1	AT	397
	209-51051-103	CABLE ASSEMBLY (indicator power unit combination to fuselage station 115) (clear jacket)	1	CG	
-71	209-51051-9	CABLE ASSEMBLY (fuselage station 115 to LH forward fuselage tank unit) (yellow jacket)	1	AT	397
	209-51051-109	CABLE ASSEMBLY (fuselage station 115 to LH forward fuselage tank unit) (yellow jacket)	1	CG	
-72	S27BL	BULKHEAD CONNECTOR (LI) (36536)	1	AT	397
	1-736-1	BULKHEAD CONNECTOR (DAGE) (95712)	1	RX	
	1-810-1	BULKHEAD CONNECTOR (DAGE) (95712)	1	RY	
	1-892-1	BULKHEAD CONNECTOR (DAGE) (95712)	1	DB	
-73	209-51051-5	CABLE ASSEMBLY (indicator power unit combination to fuselage station 115) (yellow jacket)	1	AT	397
	209-51051-105	CABLE ASSEMBLY (indicator power unit combination to fuselage station 115) (yellow jacket)	1	CG	

FUEL QUANTITY INDICATING SYSTEM

FIGURE & INDEX NO.	PART NUMBER	1 2 3 4 5 6 7 NOMENCLATURE	UNITS PER ASSY.	USABLE ON CODE	S/C NO.
247-74	209-51051-57	CABLE ASSEMBLY (fuselage station 115 to LH forward fuselage tank unit) (yellow jacket)	1	AT	397
	209-51051-157	CABLE ASSEMBLY (fuselage station 115 to LH forward fuselage tank unit) (yellow jacket)	1	CG	
-75	S27BR	BULKHEAD CONNECTOR (LI) (36536)	1	AT	397
	1-714-1	BULKHEAD CONNECTOR (DAGE) (95712)	1	RX	
	1-806-1	BULKHEAD CONNECTOR (DAGE) (95712)	1	RY	
	1-888-1	BULKHEAD CONNECTOR (DAGE) (95712)	1	DB	
-76	209-51051-55	CABLE ASSEMBLY (indicator power unit combination to fuselage station 115) (yellow jacket)	1	AT	397
	209-51051-155	CABLE ASSEMBLY (indicator power unit combination to fuselage station 115) (yellow jacket)	1	CG	
-77	209-51051-51	CABLE ASSEMBLY (tee connector fuselage station 190 to field break fuselage station 227.5) (clear jacket)	1	AT	397
	209-51051-151	CABLE ASSEMBLY (tee connector fuselage station 190 to field break fuselage station 227.5) (clear jacket)	1	CG	
-78	S28BH	BULKHEAD CONNECTOR (LI) (36536)	1	AT	397
	1-737-1	BULKHEAD CONNECTOR (DAGE) (95712)	1	RX	
	1-809-1	BULKHEAD CONNECTOR (DAGE) (95712)	1	RY	
	1-891-1	BULKHEAD CONNECTOR (DAGE) (95712)	1	DB	
-79	209-51051-85	CABLE ASSEMBLY (field break fuselage station 227.5 to tee fuselage station 264) (clear jacket)	1	AT	397
	209-51051-185	CABLE ASSEMBLY (field break fuselage station 227.5 to tee fuselage station 264) (clear jacket)	1	CG	
-80	209-51051-53	CABLE ASSEMBLY (tee connector fuselage station 190 to field break fuselage station 227.5) (yellow jacket)	1	AT	397
	209-51051-153	CABLE ASSEMBLY (tee connector fuselage station 190 to field break fuselage station 227.5) (yellow jacket)	1	CG	
-81	S28BL	BULKHEAD CONNECTOR (LI) (36536)	1	AT	397
	1-738-1	BULKHEAD CONNECTOR (DAGE) (95712)	1	RX	
	1-810-1	BULKHEAD CONNECTOR (DAGE) (95712)	1	RY	
	1-892-1	BULKHEAD CONNECTOR (DAGE) (95712)	1	DB	
-82	209-51051-83	CABLE ASSEMBLY (field break fuselage station 227.5 to tee fuselage station 264) (yellow jacket)	1	AT	397
	209-51051-183	CABLE ASSEMBLY (field break fuselage station 227.5 to tee fuselage station 264) (yellow jacket)	1	CG	
-83	S32TH	TEE CONNECTOR (LI) (36536)	1	AT	397
	1-709-1	TEE CONNECTOR (DAGE) (95712)	1	CG	
-84	S32TL	TEE CONNECTOR (LI) (36536)	1	AT	397
	1-708-1	TEE CONNECTOR (DAGE) (95712)	1	CG	
-85	209-51051-77	CABLE ASSEMBLY (tee fuselage station 264 to RH aft fuselage tank unit) (yellow jacket)	1	AT	397
	209-51051-177	CABLE ASSEMBLY (tee fuselage station 264 to RH aft fuselage tank unit) (yellow jacket)	1	CG	
-86	209-51051-79	CABLE ASSEMBLY (tee fuselage station 264 to RH aft fuselage tank unit) (clear jacket)	1	AT	397
	209-51051-179	CABLE ASSEMBLY (tee fuselage station 264 to RH aft fuselage tank unit) (clear jacket)	1	CG	
-87	209-51051-69	CABLE ASSEMBLY (tee fuselage station 264 to LH aft fuselage tank unit) (yellow jacket)	1	AT	397
	209-51051-169	CABLE ASSEMBLY (tee fuselage station 264 to LH aft fuselage tank unit) (yellow jacket)	1	CG	
-88	209-51051-71	CABLE ASSEMBLY (tee fuselage station 264 to LH aft fuselage tank unit) (clear jacket)	1	AT	397
	209-51051-171	CABLE ASSEMBLY (tee fuselage station 264 to LH aft fuselage tank unit) (clear jacket)	1	CG	
-89	209-51054-3	SWITCH ASSEMBLY, Instrument fuel pump control interlock float	1	CJ	
	209-51054-15	SWITCH ASSEMBLY, Instrument fuel pump control interlock float	1	LQ	
	ATTACHING PARTS				
	AN500A6-5	SCREW	4	ET	
	2W18-6	WASHER, Flat (NA) (89372)	4	ET	
	---*---				
	F21065-2X	. SWITCH ASSEMBLY, Float (RCO) (50625)	1	ET	
-90	209-51054-25	SWITCH ASSEMBLY, Instrument fuel pump control interlock float	1	MD	
	209-51054-35	SWITCH ASSEMBLY, Instrument fuel pump control interlock float	1	ME	
	ATTACHING PARTS				
	AN364-820	NUT	1		
	2W1AL33-28-32	WASHER, Plain (NA) (89372)	1		
	---*---				
	F8300-25	. SWITCH ASSEMBLY, Float (RCO) (50625)	1	FR	
-91	209-54161	BOX ASSEMBLY, Radio compartment electrical junction RH (see figures 301 and 302 for complete breakdown)	1		
	AN3311-2	. RELAY (low fuel sensing)	1	FR	

NOTE: *1 For breakdown see Technical Manual NA 05-65AE-523
*2 For breakdown see Technical Manual NA 05-65AE-521

The above information has been compiled from 209-54002, Page 88 (F change) and Page 88.1 (G change)

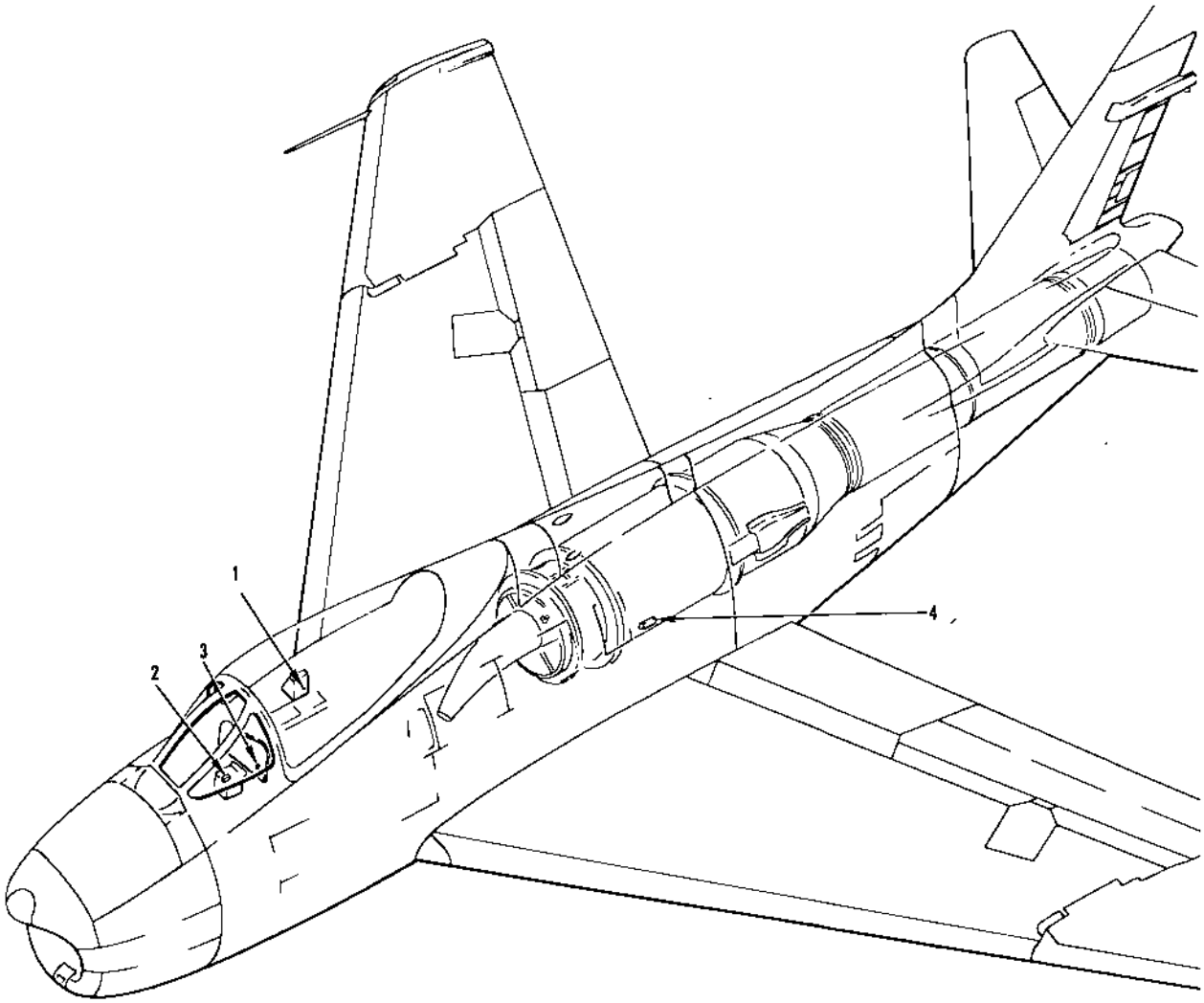

FIGURE 248 - FUEL FLOW INDICATING SYSTEM AND INSTRUMENT TRANSFORMER

FIGURE & INDEX NO.	PART NUMBER	1 2 3 4 5 6 7 NOMENCLATURE	UNITS PER ASSY.	USABLE ON CODE	S/C NO.
248-1	209-54189	PANEL ASSEMBLY, Circuit breaker and fuse cockpit RH rear (see figure 314 for complete breakdown)	1		
	209-54472	PANEL ASSEMBLY, Circuit breaker and fuse cockpit RH rear (see figure 319 for complete breakdown)	1		
	312001	. FUSE (instrument transformer) (LTF) (75915)	1		
	312001	. FUSE (RMI indicator) (LTF) (75915)	1	LE	
	312002	. FUSE (RMI indicator) (LTF) (75915)	1	KY	
	312001	. FUSE (hydraulic pressure indicator) (LTF) (75915)	1	NH	
	312001	. FUSE (hydraulic and oil pressure indicator) (LTF) (75915)	1	ME	
	312001	. FUSE (fuel flowmeter) (LTF) (75915)	1		
	9T39Y5	. TRANSFORMER (26 volt instrument) (General Electric Co.) (88422) (supersedes 70G175 (GEMI) (98863) for future procurement) (interchangeable with 70G175 (GEMI) (98863) until stock is exhausted)	1		
	209-54226	SHIELD ASSEMBLY, Center electrical pedestal complete (see figure 295 for complete breakdown)	1		
-2	CP70B1EF105V	. CAPACITOR (MIL-C-25/7)	1		
	209-51005	PANEL ASSEMBLY, Pilots instrument complete (see figures 315 and 317 for complete breakdown)	1		
	209-510108	PANEL ASSEMBLY, Pilots instrument complete (see figure 318 for complete breakdown)	1		
-3	25101-B18A-1-B1	. INDICATOR (fuel flow) (ECP) (19315) (for breakdown see Technical Manual AN 05-55B-100)	1	EE	
	No Number	. INDICATOR (fuel flow) (GFP)	1	FL	
-4	No Number	TRANSMITTER, Fuel flowmeter (GFP) (see Power Plant)	1		
	NOTE: The above information has been compiled from 209-54002 page 83 (E change)				

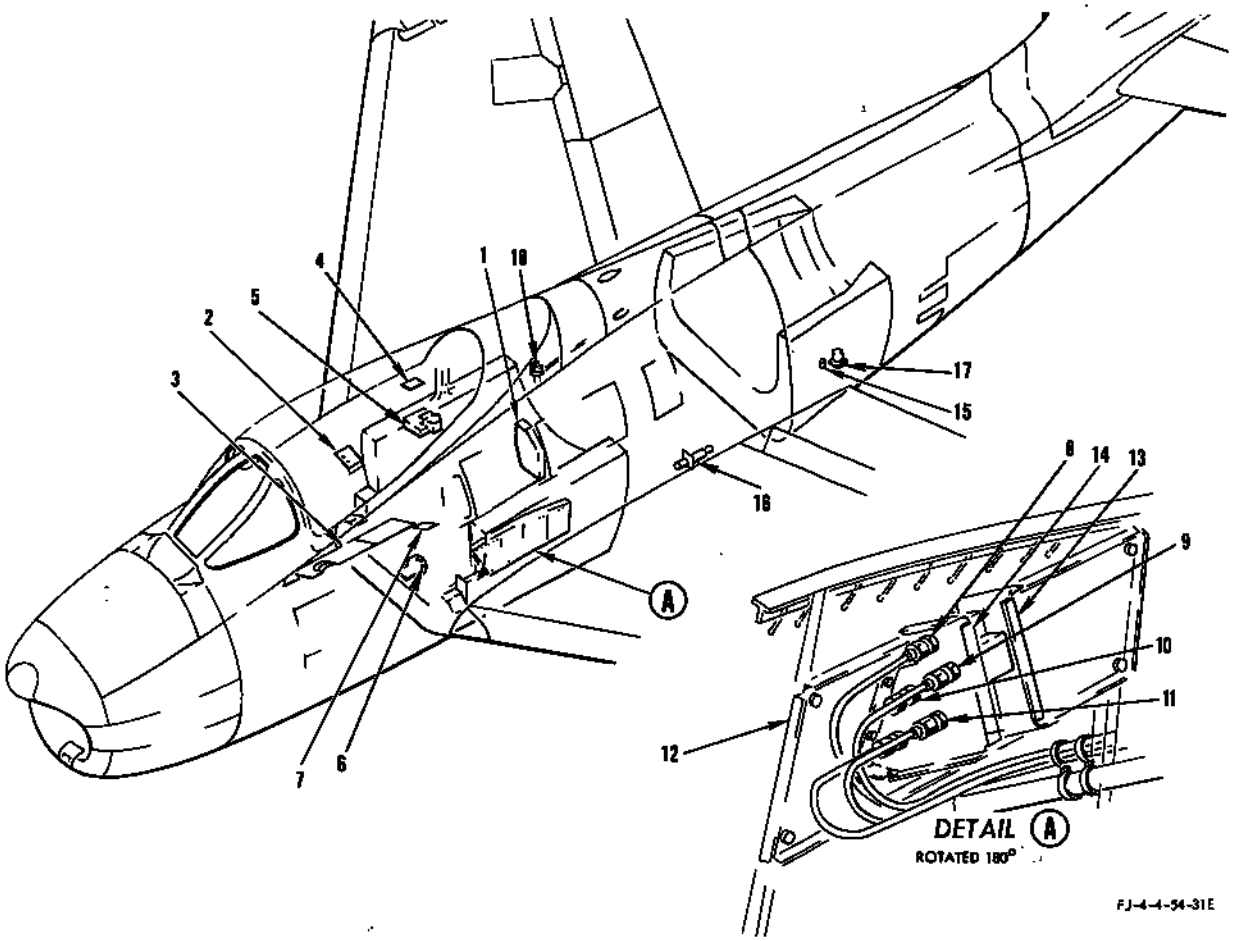

FIGURE 249 - FUEL TRANSFER, FUEL AND DEFUEL CONTROL - APPLICABLE TO AIRCRAFT CODED (ET)

FIGURE & INDEX NO.	PART NUMBER	1 2 3 4 5 6 7 NOMENCLATURE	UNITS PER ASSY.	USABLE ON CODE	S/C NO.
249-1	209-54170	PANEL ASSEMBLY, Circuit breaker station 156 LH side complete (see figure 303 for complete breakdown)	1		
	90	. CIRCUIT BREAKER (defuel and float test) (MEH) (76374)	1	AS	
	90	. CIRCUIT BREAKER (defuel and float test and yaw damper) (MEH) (76374)	1	FK	
-2	209-54458	PANEL ASSEMBLY, Pilots console RH rear (see figure 310 for complete breakdown)	1		
	94	. CIRCUIT BREAKER (aft fuel transfer pump) (MEH) (76374)	1	ET	
	94	. CIRCUIT BREAKER (wing fuel transfer pump) (MEH) (76374)	1	ET	
-3	209-54115	CONSOLE ASSEMBLY, LH forward (see figure 300 for complete breakdown)	1		
	90	. CIRCUIT BREAKER (starter control and fuel shutoff) (MEH) (76374)	1	ET	
	90	. CIRCUIT BREAKER (fuel transfer pump and fuel shutoff valve) (MEH) (76374)	1	ET	
	AN3227-3	. SWITCH (engine master)	1	ET	
-4	209-54106	PANEL ASSEMBLY, Electrical test switch complete (see figure 299 for complete breakdown)	1		
	AN3227-7	. SWITCH (fuel transfer pump test)	1	ET	
-5	209-54161	BOX ASSEMBLY, Radio compartment electrical junction RH complete (see figures 308 and 309 for complete breakdown)	1		
	7064-208	. RELAY (aft fuel transfer pump) (LR) (35344)	1	ET	
	7064-208	. RELAY (wing fuel transfer pump) (LR) (35344)	1	ET	
-6	AN3022-7	SWITCH (dual level float valve test)	1	ET	
	AN3027-3	SWITCH (defueling)	1	ET	
-7	209-54283	PANEL ASSEMBLY, Electrical emergency transfer control complete (see figure 313 for complete breakdown)	1		
	8905K780	. SWITCH (emergency transfer fuel control) (CUT) (15605)	1	ET	
-8	209-51054-13	SWITCH ASSEMBLY, Instrument fuel pump control interlock float (aft transfer pump control)	1	CJ	
	209-51054-23	SWITCH ASSEMBLY, Instrument fuel pump control interlock float (aft transfer pump control)	1	LQ	
	F21065-2X	. SWITCH, Fuel pump control (RCO) (50625) (supersedes F21065 and F21065-2 (RCO) (50625) for future procurement)	1	ET	
-9	209-51054-9	SWITCH ASSEMBLY, Instrument fuel pump control interlock float (aft transfer pump control)	1	CJ	
	209-51054-21	SWITCH ASSEMBLY, Instrument fuel pump control interlock float (aft transfer pump control)	1	LQ	
	F21065-2X	. SWITCH, Fuel pump control (RCO) (50625) (supersedes F21065 and F21065-2 (RCO) (50625) for future procurement)	1	ET	

FUEL TRANSFER, FUEL AND DEFUEL CONTROL - APPLICABLE TO AIRCRAFT CODED (ET)

FIGURE & INDEX NO.	PART NUMBER	1 2 3 4 5 6 7 NOMENCLATURE	UNITS PER ASSY.	USABLE ON CODE	S/C NO.
249-10	209-51054-7	SWITCH ASSEMBLY, Instrument fuel pump control interlock float (wing transfer pump control)	1	CJ	
	209-51054-19	SWITCH ASSEMBLY, Instrument fuel pump control interlock float (wing transfer pump control)	1	LQ	
	F21065-2X	. SWITCH, Fuel pump control (RCO) (50625) (supersedes F21065 and F21065-2 (RCO) (50625) for future procurement)	1	ET	
-11	209-51054-5	SWITCH ASSEMBLY, Instrument fuel pump control interlock float (wing transfer pump control)	1	CJ	
	209-51054-17	SWITCH ASSEMBLY, Instrument fuel pump control interlock float (wing transfer pump control)	1	LQ	
	F21065-2X	. SWITCH, Fuel pump control (RCO) (50625) (supersedes F21065 and F21065-2 (RCO) (50625) for future procurement)	1	ET	
-12	209-483128	PLATE, Fuel level float switch support (superseded by 209-483128-11 for future procurement)	1		
	209-483128-11	PLATE, Fuel level float switch support (supersedes 209-483128 for future procurement)	1		
-13	209-483131	BRACKET, Fuel level float switch aft assembly of	1		
-14	209-483130	BRACKET, Fuel level float switch forward assembly of	1		
-15	F8300-24	SWITCH, Aft pump control (RCO) (50625)	1	FH	
	ATTACHING PARTS				
	AN364-820	NUT	1	FH	
	2W18-816M	WASHER, Flat (NA) (89372)	1	FH	
	MS29512-5	PACKING	1	FH	
	---*---				
-16	122913-010-01	BOOSTER PUMP (wing fuel transfer) (PE) (77200) (for breakdown see Technical Manual NA 03-30CB-544) (see Fuel System)	1	P	
	122913-010-02	BOOSTER PUMP (wing fuel transfer) (PE) (77200) (for breakdown see Technical Manual NA 03-30CB-544) (see Fuel System)	1	KE	
-17	TB116900 *1	PUMP ASSEMBLY, Fuel boost (aft fuel transfer) (TP) (59875) (see Fuel System)	1	ET	
	TF59560	. FILTER, Radio noise (furnished as part of boost pump) (TP) (59875)	1	ET	
	RG11510-C *1	PUMP ASSEMBLY, Fuel boost (aft fuel transfer) (RO) (51663) (see Fuel System)	1	ET	
	FA2035	. FILTER, Radio noise (furnished as part of boost pump) (RO) (51663)	1	ET	
-18	AV16B-1307D	VALVE, Gate (master fuel shutoff) (GC)) (73760) (for breakdown see Technical Manual NA 03-10ABB-567)	1	ET	

NOTE: *1 Interchangeable with and supersedes 122637-221-02 (PE) (77200) and/or 122637-220-04 (PE) (77200) together with 12-557 (PE) (77200) and MS29513-28 for future procurement.
The above information has been compiled from 209-54002, Page 60 L change.

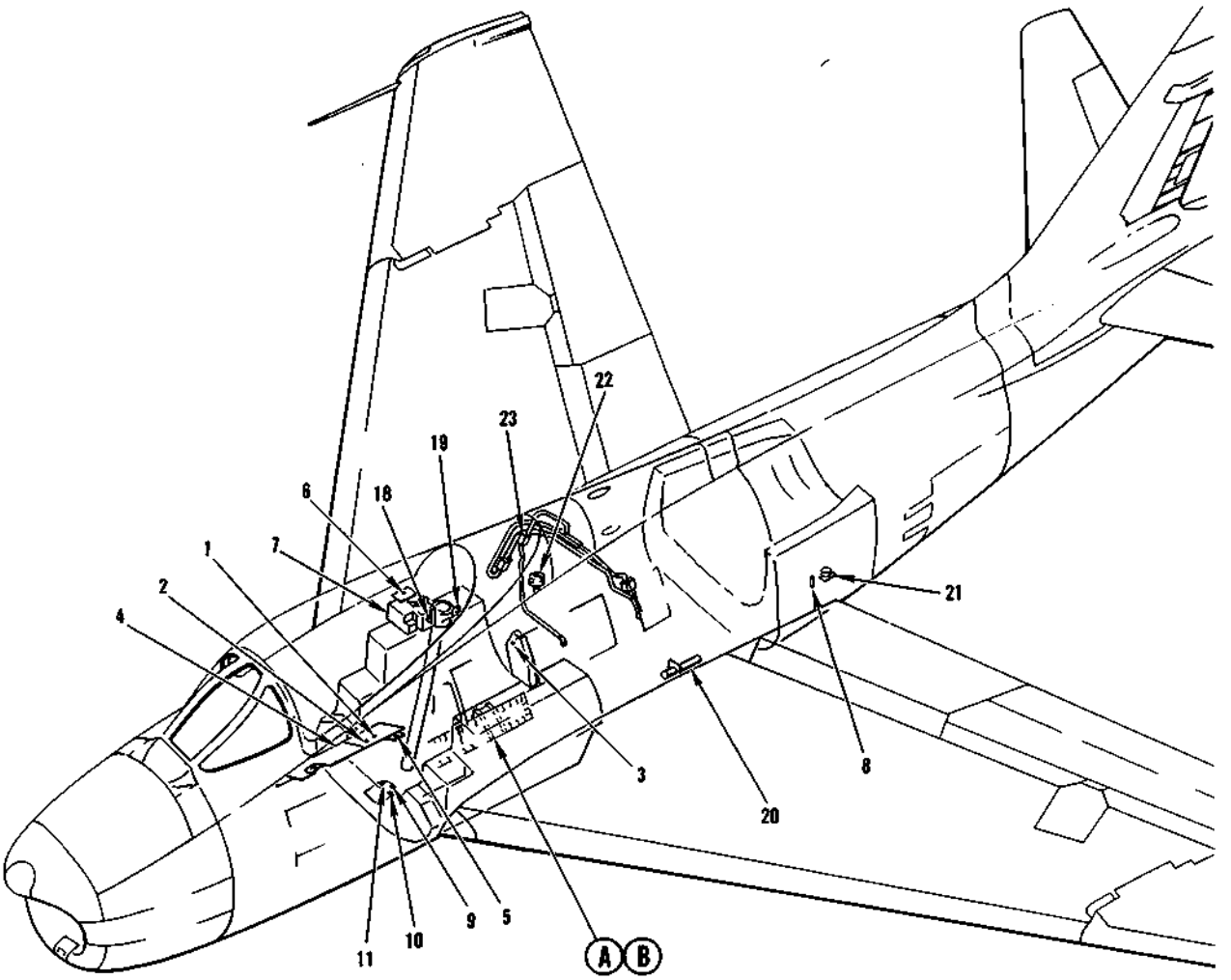

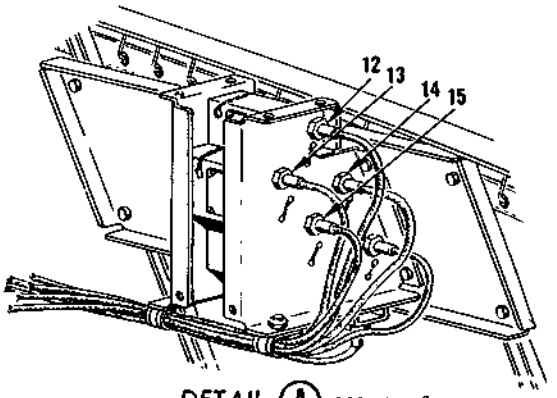

DETAIL (A) ROTATED 90°

APPLICABLE TO AIRCRAFT CODED (MD)

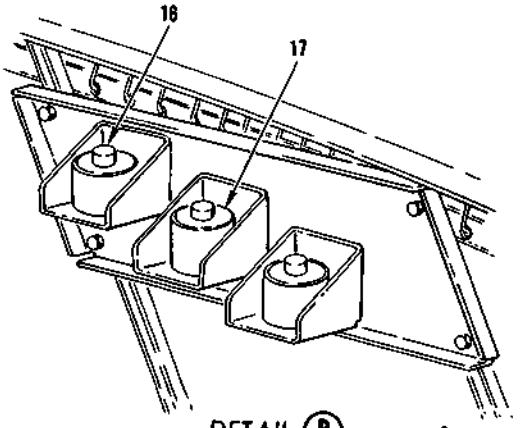

DETAIL (B) ROTATED 90°

APPLICABLE TO AIRCRAFT CODED (ME)

FJ-4B-4-S4-17C

FIGURE 250 - FUEL TRANSFER, FUEL AND DEFUEL CONTROL - APPLICABLE TO AIRCRAFT CODED (FR)

FUEL TRANSFER, FUEL AND DEFUEL CONTROL - APPLICABLE TO AIRCRAFT CODED (FR)

FIGURE & INDEX NO.	PART NUMBER	1 2 3 4 5 6 7 NOMENCLATURE	UNITS PER ASSY.	USABLE ON CODE	S/C NO.
250	209-54249	PANEL ASSEMBLY, LH rear console (see figure 302 for complete breakdown) ---	1		
-1	MS25017-25	. CIRCUIT BREAKER (aft fuel transfer pump) ----------	1	FR	
-2	MS25017-25	. CIRCUIT BREAKER (wing fuel transfer pump) ----------	1	FR	
	209-540110	PANEL ASSEMBLY, Circuit breaker station 156 LH side complete ---------- (see figure 304 for complete breakdown)	1		
-3	MS25017-5	. CIRCUIT BREAKER (defuel and float test and yaw damper) ----------	1	ML	
	MS25017-5	. CIRCUIT BREAKER (defuel and yaw damper) ----------	1	LT	
-4	209-54115	CONSOLE ASSEMBLY, LH forward (see figure 301 for complete breakdown) -----	1		
	MS25017-5	. CIRCUIT BREAKER (starter and fuel transfer) ----------	1	FR	
	MS25017-5	. CIRCUIT BREAKER (master fuel shutoff and transfer test) ----------	1	FR	
	AN3227-3	. SWITCH (engine master) ----------	1	FR	
	209-54283	PANEL ASSEMBLY, Electrical emergency transfer control complete ---------- (see figure 313 for complete breakdown)	1		
-5	8905K780	. SWITCH (emergency transfer fuel control) (CUT) (15605) ----------	1	FR	
	209-54106	PANEL ASSEMBLY, Electrical test switch complete ---------- (see figure 299 for complete breakdown)	1		
-6	AN3227-7	. SWITCH (fuel transfer pump test) ----------	1	FR	
-7	209-54161	BOX ASSEMBLY, Radio compartment electrical junction RH complete ---------- (see figure 309 for complete breakdown)	1		
	AN3311-2	. RELAY (wing scavenger air shutoff control relay) ----------	1	FR	
	7064-208	. RELAY (wing fuel transfer pump) (LR) (35344) ----------	1	FR	
	7064-208	. RELAY (aft fuel transfer pump) (LR) (35344) ----------	1	FR	
-8	F-8300-24	SWITCH (aft pump cutoff control) (RCO) (50625) ----------	1	FR	
-9	AN3027-7	SWITCH (dual level float valve test) ----------	1	LT	
-10	AN3027-3	SWITCH (defueling switch) ----------	1	FR	
-11	AN3027-3	SWITCH (150-gallon refuel) (see figure 259) ----------	1	LT	
-12	209-51054-33	SWITCH ASSEMBLY, Instrument fuel pump control interlock float ---------- (aft transfer pump control)	1	MD	
	F-21065-2X	. SWITCH, Fuel pump control (RCO) (50625) (supersedes F-21065 and -------- F-21065-2 (RCO) (50625) for future procurement)	1	MD	
-13	209-51054-31	SWITCH ASSEMBLY, Instrument fuel pump control interlock float ---------- (aft transfer pump control)	1	MD	
	F-21065-2X	. SWITCH, Fuel pump control (RCO) (50625) (supersedes F-21065 and -------- F-21065-2 (RCO) (50625) for future procurement)	1	MD	
-14	209-51054-29	SWITCH ASSEMBLY, Instrument fuel pump control interlock float ---------- (wing transfer pump control)	1	MD	
	F-21065-2X	. SWITCH, Fuel pump control (RCO) (50625) (supersedes F-21065 and -------- F-21065-2 (RCO) (50625) for future procurement)	1	MD	
-15	209-51054-27	SWITCH ASSEMBLY, Instrument fuel pump control interlock float ---------- (wing transfer pump control)	1	MD	
	F-21065-2X	. SWITCH, Fuel pump control (RCO) (50625) (supersedes F-21065 and -------- F-21065-2 (RCO) (50625) for future procurement)	1	MD	
-16	209-51054-39	SWITCH ASSEMBLY, Instrument fuel pump control interlock float ---------- (wing transfer pump off)	1	ME	
	F-8300-36	. SWITCH, Float (RCO) (50625) ----------	1	ME	
-17	209-51054-37	SWITCH ASSEMBLY, Instrument fuel pump control interlock float ---------- (wing transfer pump on)	1	ME	
	F-8300-36	. SWITCH, Float (RCO) (50625) ----------	1	ME	
-18	209-51054-43	SWITCH ASSEMBLY, Instrument fuel pump control interlock float ---------- (aft transfer pump off)	1	ME	
	F-8300-36	. SWITCH, Float (RCO) (50625) ----------	1	ME	
-19	209-51054-41	SWITCH ASSEMBLY, Instrument fuel pump control interlock float ---------- (aft transfer pump on)	1	ME	
	F-8300-36	. SWITCH, Float (RCO) (50625) ----------	1	ME	
-20	122913-010-02	BOOSTER PUMP (wing fuel transfer) (PE) (77200) (for breakdown see ---------- Technical Manual NA 03-30CB-544) (see Fuel System)	1	FR	
-21	TB116900	*1 PUMP ASSEMBLY, Fuel boost (aft fuel transfer) (TP) (59875) (see Fuel System) -	1	FR	
	TF59560	. FILTER, Radio noise (TP) (59875) ----------	1	FR	
	RG11510-C	*1 PUMP ASSEMBLY, Fuel boost (aft fuel transfer) (RO) (51663) (see Fuel System) -	1	FR	
	FA2035	. FILTER, Radio noise (RO) (51663) ----------	1	FR	
-22	AV16B-1307D	VALVE, Gate (master fuel shutoff) (GCO) (73760) (for breakdown see ---------- Technical Manual NA 03-10ABB-567) (see Fuel System)	1	FR	
-23	117235	VALVE (wing scavenger air shutoff) (WTR) (79318) ----------	1	PL	

NOTE: *1 Interchangeable with and supersedes 122637-221-02 (PE) (77200) and/or 122637-220-04 (PE) (77200) together with 12-557 (PE) (77200) and MS29513-28 for future procurement.

The above information has been compiled from 209-54002, Page 60.1 (F change)

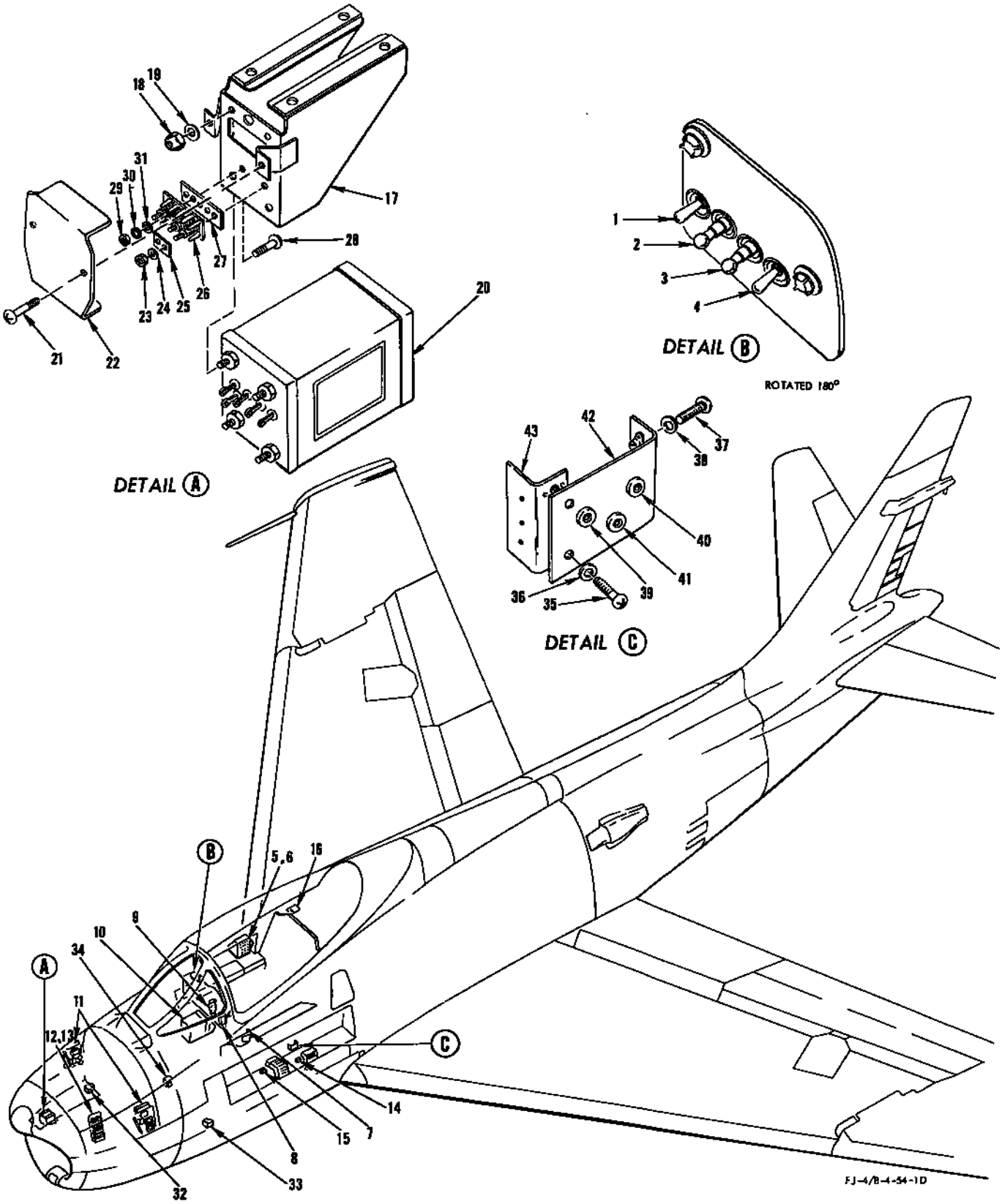

FIGURE 251 - GUN FIRING SYSTEM

GUN FIRING SYSTEM

FIGURE & INDEX NO.	PART NUMBER	1 2 3 4 5 6 7 NOMENCLATURE	UNITS PER ASSY.	USABLE ON CODE	5/C NO.
251	209-51005	PANEL ASSEMBLY, Pilots instrument complete (see figure 315 for complete breakdown)	1		
	209-510108	PANEL ASSEMBLY, Pilots instrument complete (see figure 318 for complete breakdown)	1		
-1	AN3022-2	. SWITCH (armament master)	1		
	7S13CN632-7A	. SCREW, 100° flush head corrosion-resistant (NA) (89372)	2		
-2	AN3160-5	. CIRCUIT BREAKER, Switch type (gun selector inboard)	1		
	7S13CN632-7A	. SCREW, 100° flush head corrosion-resistant (NA) (89372)	2		
-3	AN3160-5	. CIRCUIT BREAKER, Switch type (gun selector outboard)	1		
	7S13CN632-7A	. SCREW, 100° flush head corrosion-resistant (NA) (89372)	2		
-4	AN3027-2	. SWITCH (gun control)	1		
-5	209-54189	PANEL ASSEMBLY, Circuit breaker and fuse cockpit RH rear complete (see figure 314 for complete breakdown)	1		
	90	. CIRCUIT BREAKER (ground firing control and flight control pressure warning (MEH) (76374)	1	DH	
	90	. CIRCUIT BREAKER (gun bay purge - control) (MEH) (76374)	1	ET	
	312001	. FUSE (LH gun power) (LTF) (75915)	1	ET	
	312001	. FUSE (RH gun power) (LTF) (75915)	1	ET	
-6	209-54472	PANEL ASSEMBLY, Circuit breaker and fuse cockpit RH rear complete (see figure 319 for complete breakdown)	1		
	MS25017-15	. CIRCUIT BREAKER (bomb and gun trigger)	1	FR	
	MS25017-5	. CIRCUIT BREAKER (gun charging)	1	FR	
	MS25017-5	. CIRCUIT BREAKER (gun bay purge)	1	FR	
	MS25017-5	. CIRCUIT BREAKER (armament bus)	1	FR	
	MS25017-5	. CIRCUIT BREAKER (purge valve and camera test)	1	FR	
	312001	. FUSE (LH gun power) (LTF) (75915)	1	HJ	
	312001	. FUSE (RH gun power) (LTF) (75915)	1	HJ	
	312004	. FUSE (LH gun power) (LTF) (75915)	1	FL	
	312004	. FUSE (RH gun power) (LTF) (75915)	1	FL	
	209-54115	CONSOLE ASSEMBLY, LH forward (see figures 300 and 301 for complete breakdown)	1		
-7	91	. CIRCUIT BREAKER (landing gear control and wingfold control) (MEH) (76374)	1	ET	
	MS25017-10	. CIRCUIT BREAKER (landing gear control and wingfold control)	1	FR	
-8	10682A-200	SWITCH (landing gear control) (CARM) (81839)	1		
	7S13CN632-8A	SCREW, 100° flush head corrosion-resistant (NA) (89372)	4		
-9	G-56778A	GRIP (pilots control stick) (GN) (73949) (supersedes G-56778 (GN) (73949) for future procurement) (see Surface and Secondary Controls)	1	ET	
	PEI-116B	GRIP (pilots control stick) (PIQA) (81380) (supersedes PEI-116A (PIQA) (81380) for future procurement) (see Surface and Secondary Controls)	1	KX	
	PEI-116C	GRIP (pilots control stick) (PIQA) (81380) (see Surface and Secondary Controls)	1	KY	
-10	209-54226	SHIELD ASSEMBLY, Center electrical pedestal complete (see figure 295 for complete breakdown)	1		
	90	. CIRCUIT BREAKER (armament bus control) (MEH) (76374)	1	ET	
	90	. CIRCUIT BREAKER (purge valve and camera test) (MEH) (76374)	1	ET	
	92	. CIRCUIT BREAKER (bomb and gun trigger) (MEH) (76374)	1	ET	
	90	. CIRCUIT BREAKER (gun charging) (MEH) (76374)	1	ET	
	AN3311-2	. RELAY (gun firing)	1		
	AN3311-2	. RELAY (gun AC power)	1		
	AN3311-2	. RELAY (ground firing control)	1		
	AN3350-2	. RELAY (armament master)	1		
	AN3310-2	. RELAY (landing gear switch down)	1		
-11	209-54067	PANEL ASSEMBLY, Gun firing units (see figure 311 for complete breakdown)	2	NH	449
	No Number	. POWER SUPPLY (Aero 2A) (GFP)	2	EE	449
	No Number	. CONTROL UNIT (Aero 1B) (GFP)	2	EE	449
	No Number	. JUMPER PLUG (Aero 2A) (GFP)	2	FL	449
	No Number	. CONTROL UNIT (Aero 2A) (GFP)	2	FL	449
-12	209-540172	PANEL ASSEMBLY, Gun firing unit (see figure 311 for complete breakdown)	1	NH	
	209-540171	. PANEL ASSEMBLY, Gun firing unit (see figure 311 for complete breakdown)	1	NH	
	No Number	. . CONTROL UNIT (Aero 2A) (left inboard) (GFP)	1	FL	
	No Number	. . CONTROL UNIT (Aero 1B) (left inboard) (GFP)	1	EE	
	No Number	. . CONTROL UNIT (Aero 2A) (left outboard) (GFP)	1	FL	
	No Number	. . CONTROL UNIT (Aero 1B) (left outboard) (GFP)	1	EE	
	No Number	. . CONTROL UNIT (Aero 2A) (right inboard) (GFP)	1	FL	
	No Number	. . CONTROL UNIT (Aero 1B) (right inboard) (GFP)	1	EE	
	No Number	. . CONTROL UNIT (Aero 2A) (right outboard) (GFP)	1	FL	
	No Number	. . CONTROL UNIT (Aero 1B) (right outboard) (GFP)	1	EE	
	No Number	. . CONTROL JUMPER PLUG (Aero 2A) (left inboard) (GFP)	1	FL	
	No Number	. . CONTROL POWER SUPPLY (Aero 2A) (left inboard) (GFP)	1	EE	
	No Number	. . CONTROL JUMPER PLUG (Aero 2A) (left outboard) (GFP)	1	FL	
	No Number	. . CONTROL POWER SUPPLY (Aero 2A) (left outboard) (GFP)	1	EE	
	No Number	. . CONTROL JUMPER PLUG (Aero 2A) (right inboard) (GFP)	1	FL	
	No Number	. . CONTROL POWER SUPPLY (Aero 2A) (right inboard) (GFP)	1	EE	
	No Number	. . CONTROL JUMPER PLUG (Aero 2A) (right outboard) (GFP)	1	FL	
	No Number	. . CONTROL POWER SUPPLY (Aero 2A) (right outboard) (GFP)	1	EE	
-13	244-54010	PANEL ASSEMBLY, Electrical Aero 2A gun firing unit (see figure 312 for complete breakdown)	1	ME	
	No Number	. CONTROL UNIT (Aero 2A) (left inboard) (GFP)	1	ME	
	No Number	. CONTROL UNIT (Aero 2A) (left outboard) (GFP)	1	ME	
	No Number	. CONTROL UNIT (Aero 2A) (right inboard) (GFP)	1	ME	
	No Number	. CONTROL UNIT (Aero 2A) (right outboard) (GFP)	1	ME	
	No Number	. JUMPER PLUG (Aero 2A) (left inboard) (GFP)	1	ME	
	No Number	. JUMPER PLUG (Aero 2A) (left outboard) (GFP)	1	ME	
	No Number	. JUMPER PLUG (Aero 2A) (right inboard) (GFP)	1	ME	

GUN FIRING SYSTEM

FIGURE & INDEX NO.	PART NUMBER	1 2 3 4 5 6 7 NOMENCLATURE	UNITS PER ASSY.	USABLE ON CODE	S/C NO.
251	No Number	. JUMPER PLUG (Aero 2A) (right outboard) (GFP)	1	ME	
-14	200000-100	SWITCH ASSEMBLY (LH and RH outboard gun) (HRAJ) (01146) (see Armament)	2		
-15	200000-100	SWITCH ASSEMBLY (LH and RH inboard gun) (HRAJ) (01146) (see Armament)	2		
	209-54106	PANEL ASSEMBLY, Electrical test switch complete (see figure 299 for complete breakdown)	1		
-16	AN3022-11	. SWITCH (ground firing control)	1		
	181-54055-11	BRACKET ASSEMBLY, Purge door time delay relay complete	1		
-17	181-54056	. BRACKET ASSEMBLY, Purge door time delay relay mounting	1		
-18	AN365-832	. NUT	4		
-19	2W18-8	. WASHER, Flat (NA) (89372)	4		
-20	E6442	. RELAY (time delay) (HYAW) (82227)	1		
-21	AN515-6R6	. SCREW	2		
-22	181-54112	. GUARD, Purge door time delay relay	1		
-23	AN365-440	. NUT	2		
-24	2W18-4L	. WASHER, Flat (NA) (89372)	4		
-25	AN3434-2	. STRIP	2		
-26	AN3436-1-4	. TERMINAL BLOCK ASSEMBLY	1		
-27	5S7-3-5-1-4	. STRIP, Terminal block base insulating (NA) (89372)	1		
-28	AN515-4R5	. SCREW	2		
-29	AN341-6	. NUT	4		
-30	AN936A6B	. WASHER	4		
-31	AN961-6	. WASHER	4		
-32	11070	VALVE, Hydraulic solenoid (gun bay purge door) (MVEM) (93724) (interchangeable with 12000 (BTP) (82106) and 141082 (PAET) (92003)) (see Hydraulic System) (for breakdown see Technical Manual NA 03-30EX-504)	1		
-33	106365	VALVE (LH and RH gun charging) (WTR) (79318) (see Armament) (for breakdown - see Technical Manual NA 03-30EB-577)	2	AD	
-34	113195	VALVE (gun charging)(WTR) (79318) (871302 (WK) (33525) may be used) (see Armament)	1	EK	
	209-542118-1	PANEL ASSEMBLY, Electrical gun test jack	1	LT	447
	209-542118-2	PANEL ASSEMBLY, Electrical gun test jack	1	LT	447
	ATTACHING PARTS				
-35	AN520-10R8	SCREW	4	LT	
-36	2W18-10M	WASHER, Flat (NA) (89372)	4	LT	
-37	AN520-10R8	SCREW	4	LT	
-38	2W18-10M	WASHER, Flat (NA) (89372)	4	LT	
	---*---				
-39	AN3249-1	. JACK (gun test outboard)	1	LT	
-40	AN3249-1	. JACK (gun test inboard)	1	LT	
-41	AN3249-2	. JACK (gun test ground)	1	LT	
-42	209-542119-1	. BRACKET, Electrical gun test jack	1	LT	
	209-542119-2	. BRACKET, Electrical gun test jack	1	LT	
-43	209-542117-1	CLIP, Electrical gun test jack LH	1	LT	447
	209-542117-2	CLIP, Electrical gun test jack RH	1	LT	447
	209-61211	SHIM, Gun breech block slide contact switch	8		484

NOTE: The above information has been compiled from 209-54002. Page 65 (K change) and Page 65.1

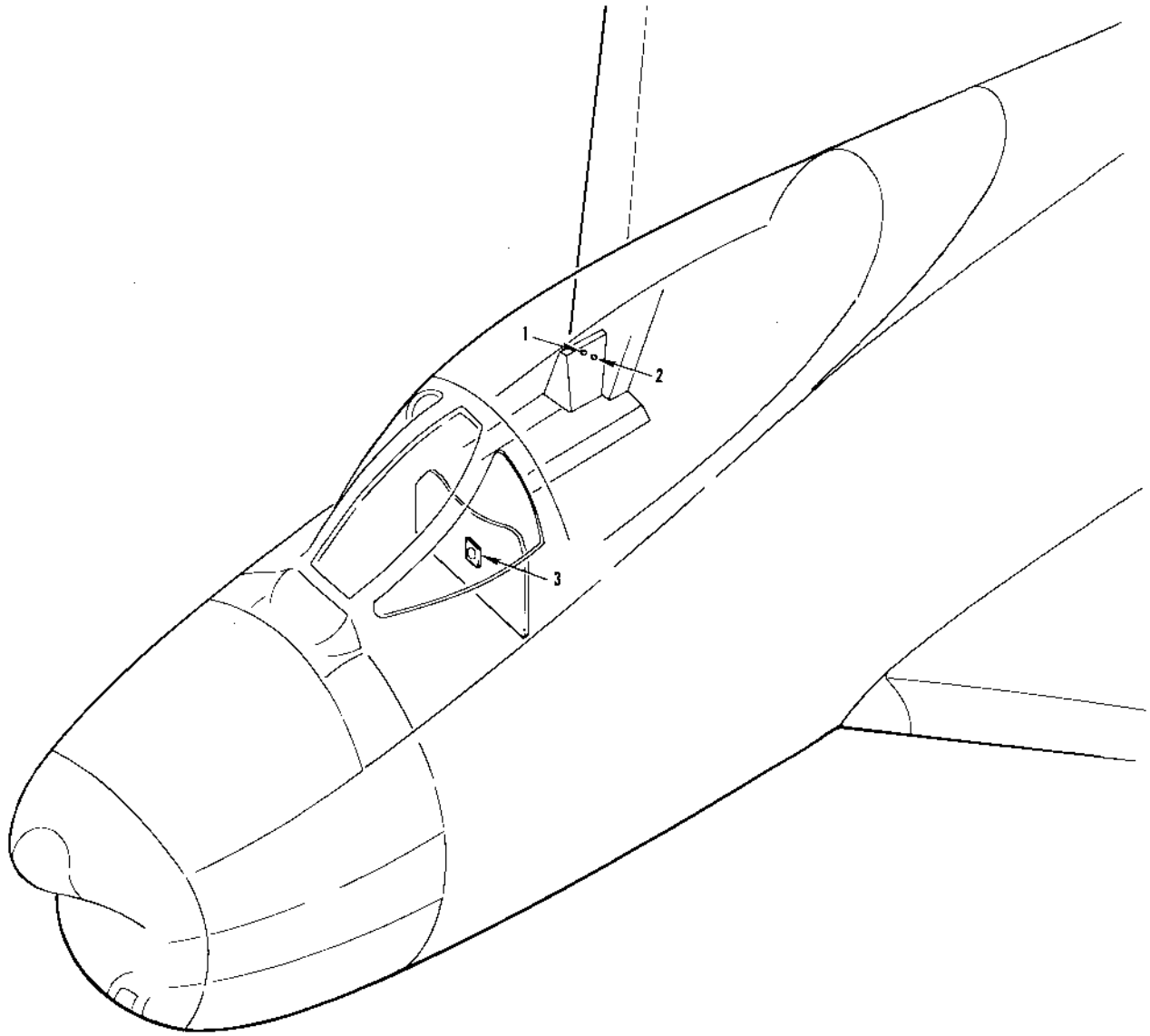

FJ-4-4-54-77

FIGURE 252 - GYRO HORIZON INDICATOR - APPLICABLE TO AIRCRAFT CODED (Y)

FIGURE & INDEX NO.	PART NUMBER	1 2 3 4 5 6 7 NOMENCLATURE	UNITS PER ASSY.	USABLE ON CODE	S/C NO.
252	209-54189	PANEL ASSEMBLY, Circuit breaker and fuse cockpit RH rear (see figure 314 for complete breakdown)	1		
-1	312001	. FUSE (gyro horizon phase A) (LTF)	1	Y	
-2	312001	. FUSE (gyro horizon phase C) (LTF)	1	Y	
	209-51005	PANEL ASSEMBLY, Pilots instrument (see figures 315 and 317 for complete breakdown)	1		
-3	No Number	. INDICATOR (gyro horizon) (GFP) (Stock No. R88I1332-025) (MIL-I-7906 (AER))	1	CM	266

NOTE: The above information was compiled from 209-54002, Page 85 (B change)

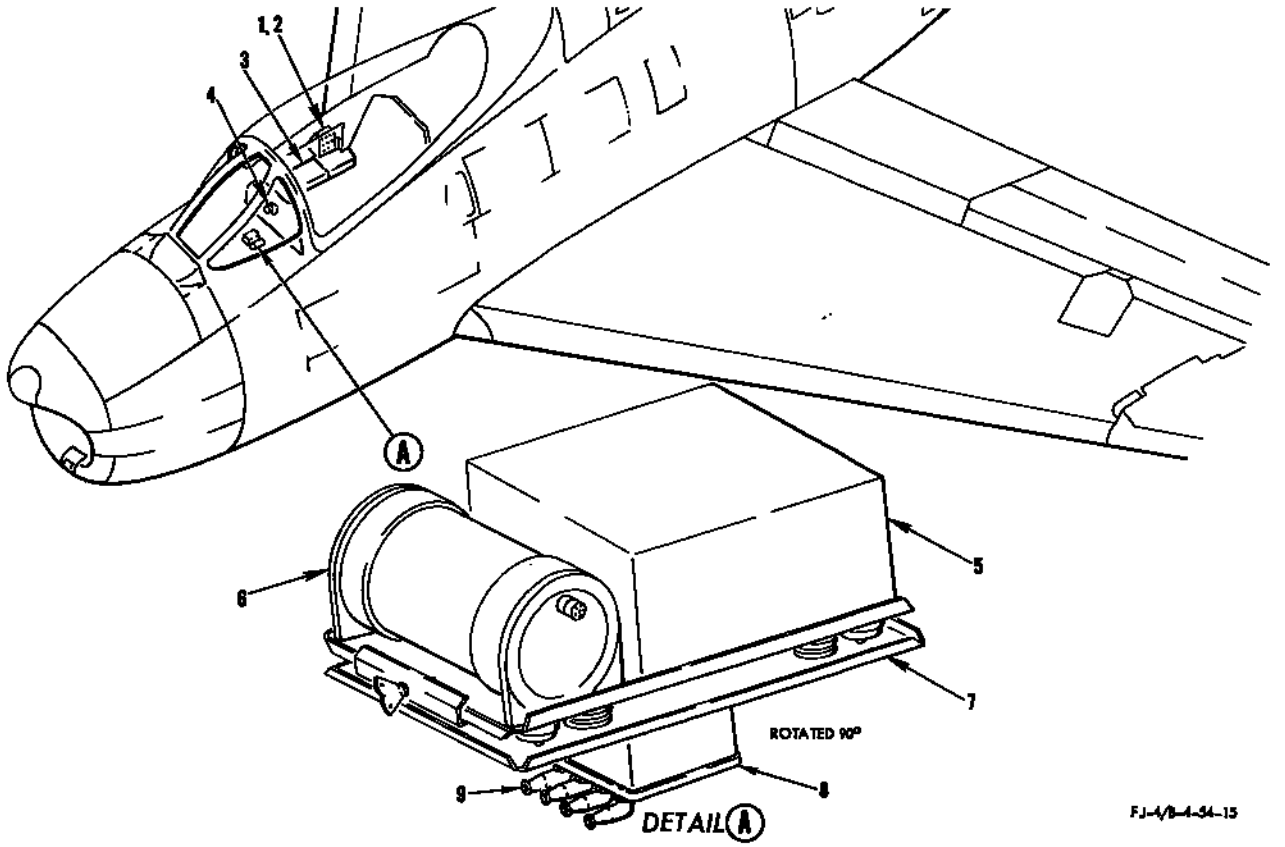

FIGURE 253 - GYRO HORIZON INDICATOR - APPLICABLE TO AIRCRAFT CODED (Z)

FIGURE & INDEX NO.	PART NUMBER	1 2 3 4 5 6 7 NOMENCLATURE	UNITS PER ASSY.	USABLE ON CODE	S/C NO.
253-1	209-54189	PANEL ASSEMBLY, Circuit breaker and fuse cockpit RH rear (see figure 314 for complete breakdown)	1		
	312001	. FUSE (gyro horizon phase A) (LTF) (75915)	1	ET	
	312001	. FUSE (gyro horizon phase C) (LTF) (75915)	1	ET	
	90	. CIRCUIT BREAKER (gyro horizon) (MEH) (76374)	1	FS	
-2	209-54472	PANEL ASSEMBLY, Circuit breaker and fuse cockpit RH rear (see figure 319 for complete breakdown)	1		
	312001	. FUSE (gyro horizon phase A) (LTF) (75915)	1	FR	
	312001	. FUSE (gyro horizon phase C) (LTF) (75915)	1	FR	
-3	209-54026	CONSOLE ASSEMBLY, RH forward (see figure 306 for complete breakdown)	1		
	MS25017-5	. CIRCUIT BREAKER (gyro horizon)	1	FR	
	209-51005	PANEL ASSEMBLY, Pilots instrument complete (see figure 315 for complete breakdown)	1		
	209-510108	PANEL ASSEMBLY, Pilots instrument complete (see figure 318 for complete breakdown)	1		
-4	105759-01	. INDICATOR ASSEMBLY, Vertical gyro type MM-1 model 978R (GFP) (LA) (35351) (for breakdown see Technical Manual NA 05-20GE-507)	1	Z	
-5	105713-01	CONTROL ASSEMBLY, Model 975N (GFP) (LA) (35351) (for breakdown see Technical Manual NA 05-20GE-503	1	Z	
-6	105716-01	VERTICAL GYRO ASSEMBLY, Model 973G (GFP) (LA) (35351) (for breakdown see Technical Manual NA 05-20GE-505)	1	Z	
	ATTACHING PARTS				
	AN520-10R8	SCREW	4	Z	
	2W18-10M	WASHER, Flat (NA) (89372)	8	Z	
	AN365-1032	NUT	4	Z	
	---*---				
-7	116380-01	SHOCKMOUNT (LA) (35351)	1	Z	
	ATTACHING PARTS				
	AN3-14A	BOLT	4	Z	
	2W18-10M	WASHER, Flat (NA) (89372)	4	Z	
	---*---				
-8	645-101	RELAY (AC/DC interlock) (COE) (71688)	1	KY	461
	ATTACHING PARTS				
	AN365-832	NUT	4	KY	
	2W18-8	WASHER, Flat (NA) (89372)	8	KY	
	AN515-8R10	SCREW	4	KY	
	---*---				
-9	AN781-1	NIPPLE	7	KY	

NOTE: The above information has been compiled from 209-54002, page 85.1 (F change)

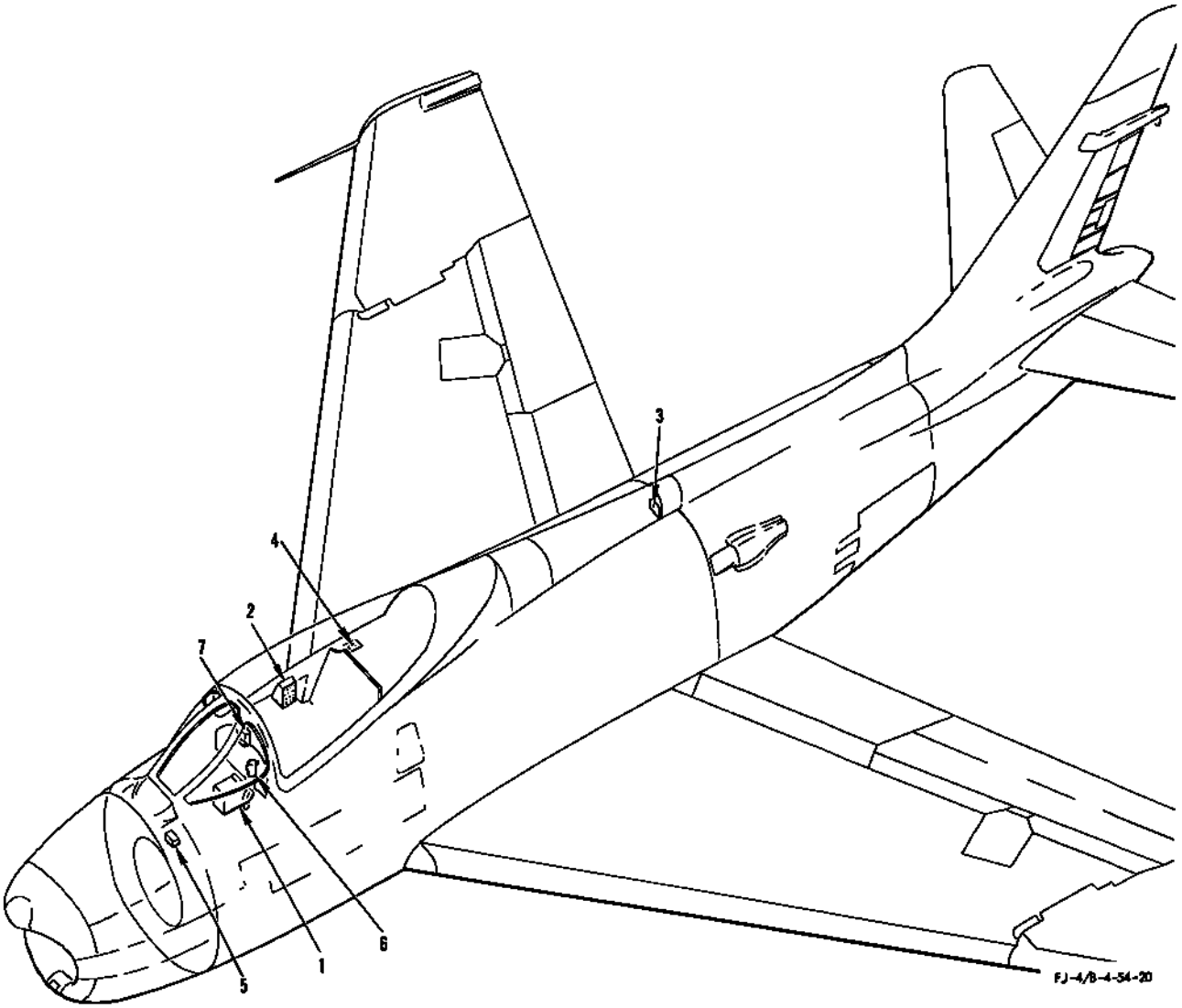

FIGURE 254 - GUN CAMERA

FIGURE & INDEX NO.	PART NUMBER	1 2 3 4 5 6 7 NOMENCLATURE	UNITS PER ASSY.	USABLE ON CODE	S/C NO.
254-1	209-54226	SHIELD ASSEMBLY, Center electrical pedestal complete (see figure 295 for complete breakdown)	1		
	92	. CIRCUIT BREAKER (bomb and gun trigger) (MEH) (76374)	1	ET	
	90	. CIRCUIT BREAKER (camera and ammo boost control) (MEH) (76374)	1	ET	
	90	. CIRCUIT BREAKER (camera test and purge valve) (MEH) (76374)	1	ET	
-2	209-54472	PANEL ASSEMBLY, Circuit breaker and fuse cockpit RH rear complete (see figure 319 for complete breakdown)	1		
	MS25017-15	. CIRCUIT BREAKER (bomb and gun trigger)	1	FR	
	MS25017-5	. CIRCUIT BREAKER (ammo boost and gun camera)	1	FR	
	MS25017-5	. CIRCUIT BREAKER (purge valve and camera test)	1	FR	
	209-54109	PANEL ASSEMBLY, Station 227.5 electrical circuit breaker (see figure 296 for complete breakdown)	1		
-3	90	. CIRCUIT BREAKER (gun camera and canopy bus) (MEH) (76374)	1	ET	
	MS25017-5	. CIRCUIT BREAKER (gun camera and canopy bus) (MEH) (76374)	1	FR	
	209-54106	PANEL ASSEMBLY, Electrical test switch complete (see figure 299 for complete breakdown)	1		
-4	AN3027-6	. SWITCH (camera test)	1		
-5	4JX55	FILTER, Radio noise (SPR) (56289) (interchangeable with JX55F (SPR) (56289))	1	AR	
-6	G-56778-A	GRIP (pilots control stick) (GN) (73949) (supersedes G-56778 (GN) (73949) for future procurement) (see Surface and Secondary Controls)	1	ET	
	PEI-116C	GRIP (pilots control stick) (PIQA) (81380) (see Surface and Secondary Controls)	1	FR	481
-7	AN-N6A	CAMERA, Gun (GFP) (see Armament)	1		

NOTE: The above information has been compiled from 209-54002, Page 73 (F change)

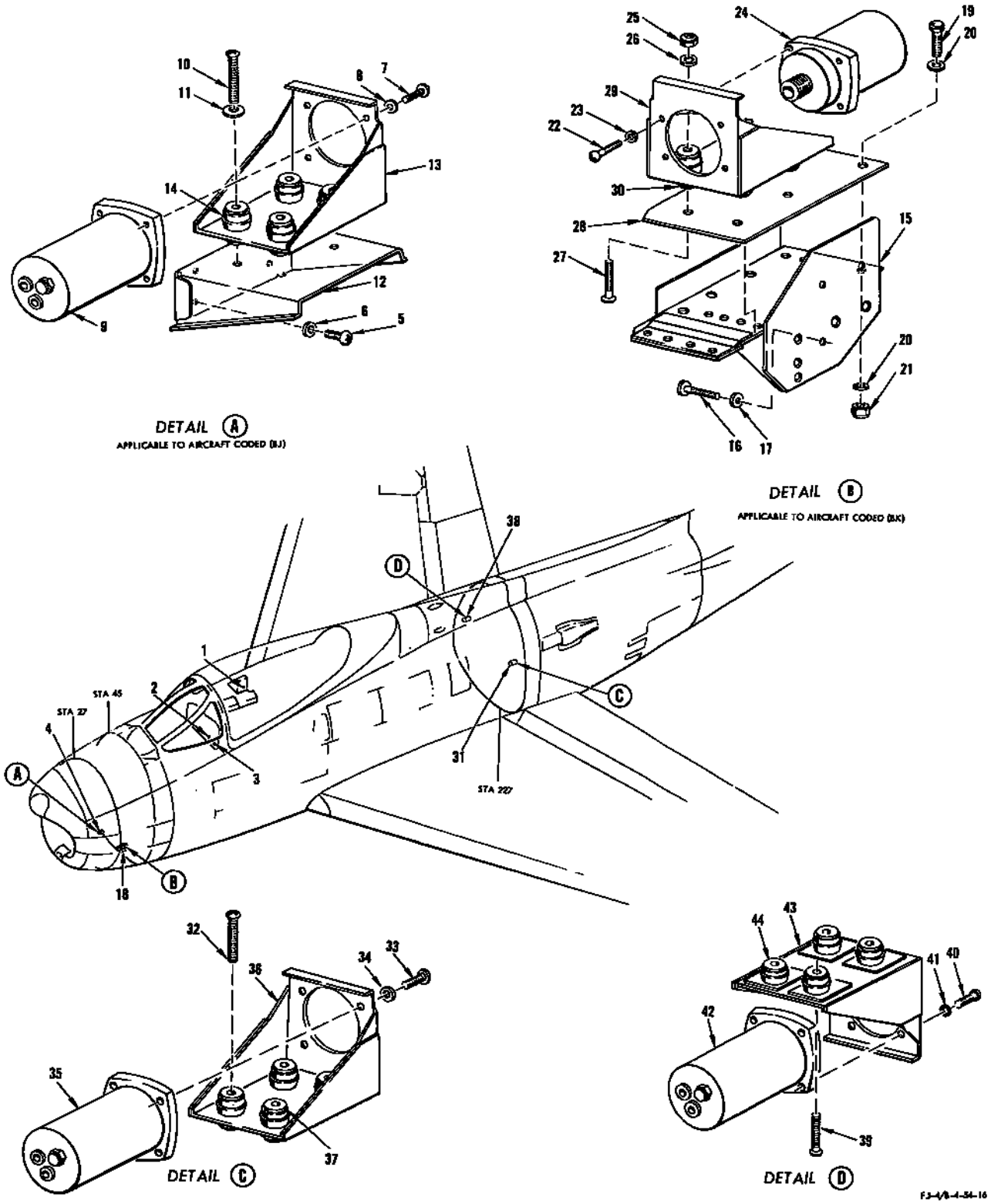

FIGURE 255 - HYDRAULIC PRESSURE INDICATING SYSTEM

HYDRAULIC PRESSURE INDICATING SYSTEM

FIGURE & INDEX NO.	PART NUMBER	1 2 3 4 5 6 7 NOMENCLATURE	UNITS PER ASSY.	USABLE ON CODE	S/C NO.
255	209-54189	PANEL ASSEMBLY, Circuit breaker and fuse cockpit RH rear (see figure 314 for complete breakdown)	1		
	209-54472	PANEL ASSEMBLY, Circuit breaker and fuse cockpit RH rear (see figure 319 for complete breakdown)	1		
-1	312001	. FUSE (hydraulic pressure indicator) (LTF) (75915)	1	MD	
	312001	. FUSE (hydraulic and oil pressure indicator) (LTF)(75915)	1	ME	
	209-51005	PANEL ASSEMBLY, Pilots instrument (see figure 315 for complete breakdown)	1		
	209-510108	PANEL ASSEMBLY, Pilots instrument (see figure 318 for complete breakdown)	1		
-2	25602-A37C-7-A1	. INDICATOR (hydraulic pressure (ECP) (19315) (for breakdown see Technical Manual NA 05-55B-568)	1		
-3	FS-77	. SWITCH (hydraulic pressure selector) (PLL)(77326)	1		
-4	209-51098	SUPPORT ASSEMBLY, Hydraulic pressure transmitter (utility)	1	BJ	366
	ATTACHING PARTS				
-5	AN520-10R8	SCREW	4	BJ	366
-6	2W18-10M	WASHER, Flat (NA)(89372)	4	BJ	366
	---*---				
-7	AN515-6R6	. SCREW	4	BJ	366
-8	2W18-6L	. WASHER, Flat (NA)(89372)	4	BJ	366
-9	MS28005-5	. TRANSMITTER (utility hydraulic pressure) (GFP)	1	BJ	366
-10	AN515-8R22	. SCREW	4	BJ	366
-11	2W18-8L	. WASHER, Flat (NA)(89372)	4	BJ	366
-12	209-51096	. BRACKET ASSEMBLY, Utility pressure transmitter support	1		
-13	181-51139-11	. SUPPORT ASSEMBLY, Hydraulic pressure transmitter	1	BJ	366
-14	809-2	. . MOUNT (RAI)(51116)	4	BJ	366
-15	209-51166	BRACKET ASSEMBLY, Hydraulic utility pressure transmitter support	1	BK	
	ATTACHING PARTS				
-16	AN3-4	BOLT	3	BK	
-17	2W18-10M	WASHER, Flat (NA) (89372)	3	BK	
	---*---				
-18	209-51098-40	SUPPORT ASSEMBLY, Hydraulic pressure transmitter (utility)	1	BK	
	ATTACHING PARTS				
-19	AN3-3A	BOLT	2	BK	
-20	2W18-10M	WASHER, Flat (NA) (89372)	4	BK	
-21	AN365-1032	NUT	2	BK	
	---*---				
-22	AN515-6R6	. SCREW	3	BK	
	AN515-6R7	. SCREW	1	BK	
-23	2W18-6L	. WASHER. Flat (NA) (89372)	4	BK	
-24	MS28005-5	. TRANSMITTER (utility hydraulic pressure) (GFP)	1	BK	
-25	AN364-1032	. NUT	4	BK	
-26	2W18-10M	. WASHER, Flat (NA) (89372)	4	BK	
-27	AN509-10R22	. SCREW	4	BK	
-28	209-51165	. PLATE, Hydraulic utility pressure transmitter support	1	BK	
-29	181-51139-21	. SUPPORT ASSEMBLY, Hydraulic pressure transmitter	1	BK	
-30	809-2	. . MOUNT (RAI) (51116)	4	BK	
-31	209-51098-20	SUPPORT ASSEMBLY, Hydraulic pressure transmitter (No. 1 flight control)	1		
	ATTACHING PARTS				
-32	AN515-8R24	SCREW	4		
	---*---				
-33	AN515-6R6	. SCREW	4		
-34	2W18-6L	. WASHER, Flat (NA) (89372)	4		
-35	MS28005-5	. TRANSMITTER (No. 1 flight control hydraulic pressure) (GFP)	1		
-36	181-51139-11	. SUPPORT ASSEMBLY, Hydraulic pressure transmitter	1		
-37	809-2	. . MOUNT (RAI) (51116)	4		
-38	209-51098-30	SUPPORT ASSEMBLY, Hydraulic pressure transmitter (No. 2 flight control)	1		
	ATTACHING PARTS				
-39	AN515-8R22	SCREW	4		
	---*---				
-40	AN515-6R6	. SCREW	4		
-41	2W18-6L	. WASHER, Flat (NA) (89372)	4		
-42	MS28005-5	. TRANSMITTER (No. 2 flight control hydraulic pressure) (GFP)	1		
-43	181-51139-11	. SUPPORT ASSEMBLY, Hydraulic pressure transmitter	1		
-44	809-2	. . MOUNT (RAI)(51116)	4		

NOTE: The above information has been compiled from 209-54002, Page 82 (F change)

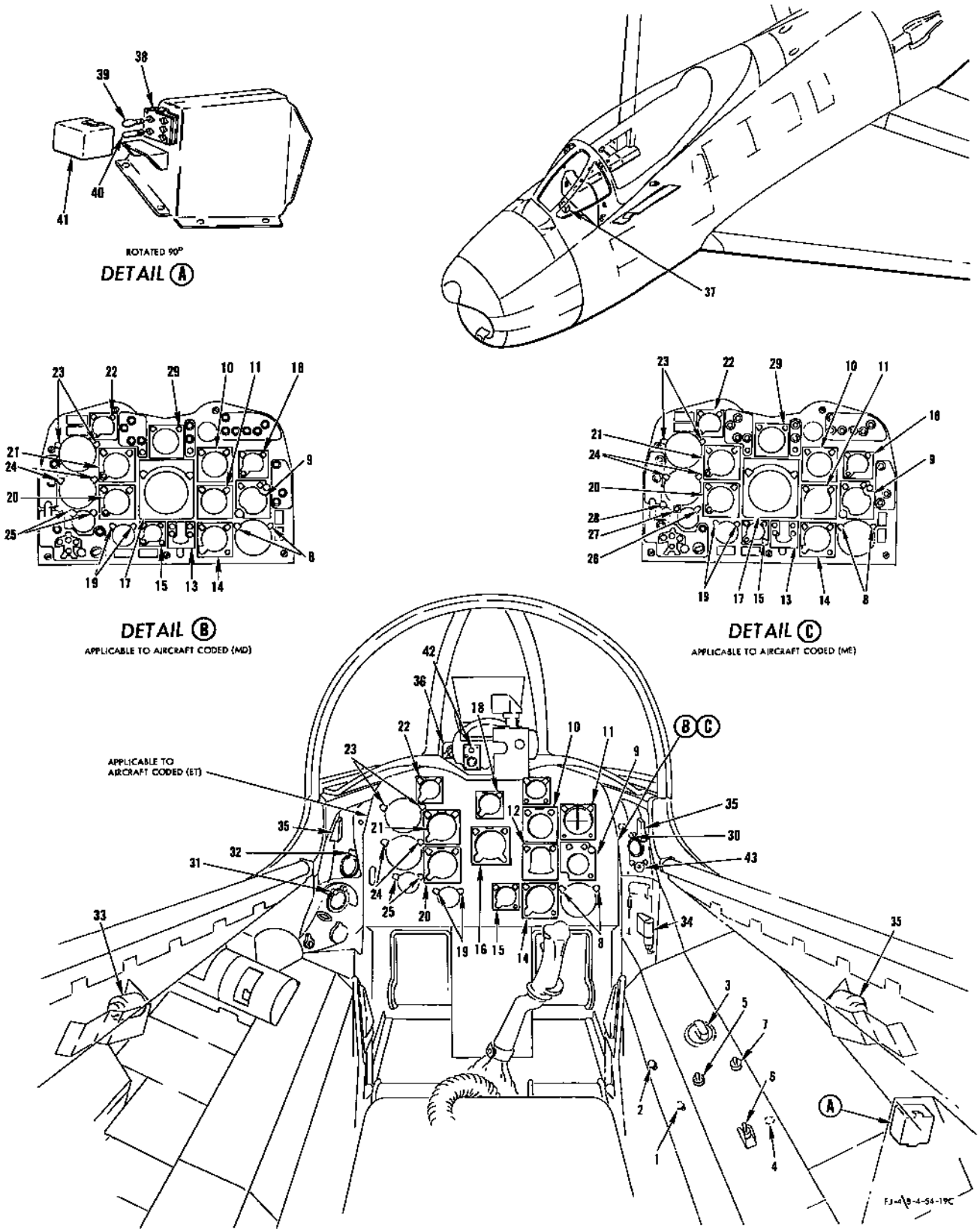

FIGURE 256 - INSTRUMENT LIGHTS AND COCKPIT FLOODLIGHTS

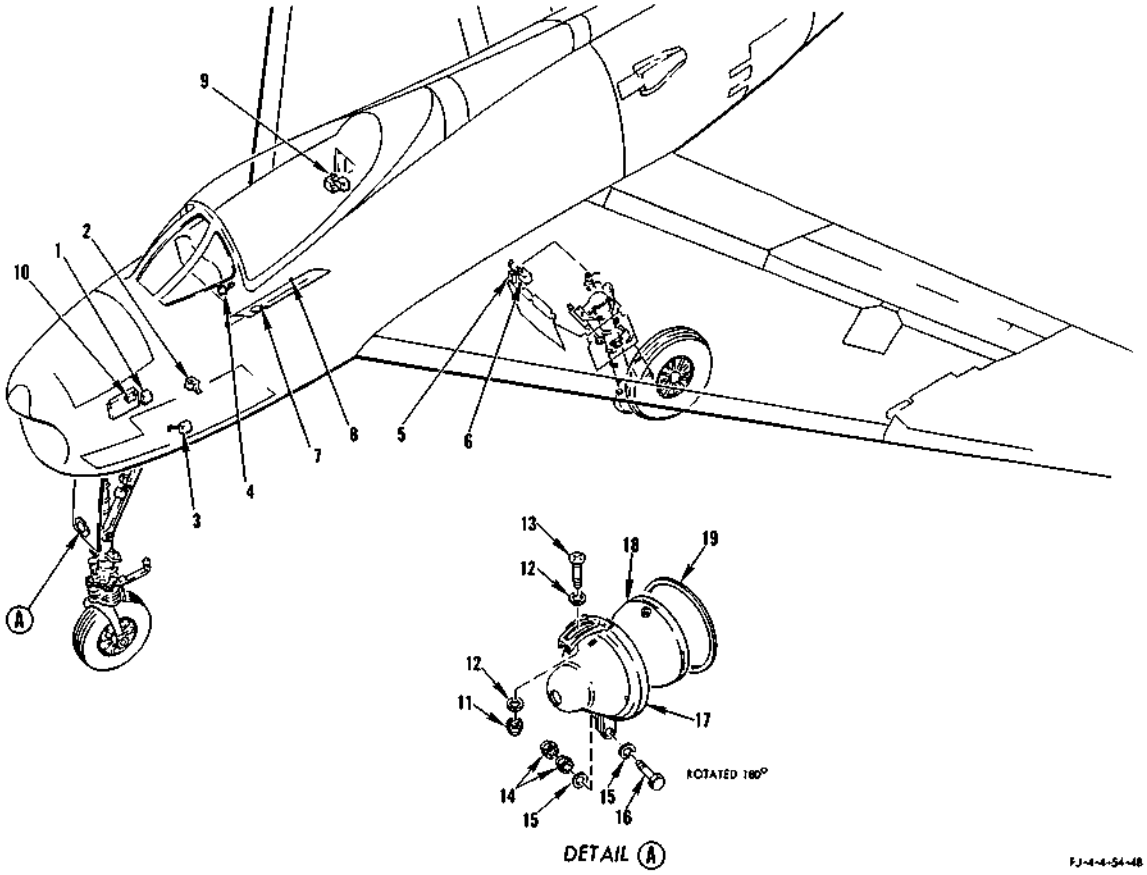

FIGURE 261 - LANDING LIGHT

FIGURE & INDEX NO.	PART NUMBER	1 2 3 4 5 6 7 NOMENCLATURE	UNITS PER ASSY.	USABLE ON CODE
261-1		*1 NOSE LANDING GEAR DOOR UPLOCK SWITCH ASSEMBLY, LINKAGE AND ATTACHING PARTS		
-2		*1 NOSE LANDING GEAR WHEEL DOOR CLOSE SWITCH ASSEMBLY, LINKAGE AND ATTACHING PARTS		
-3		*1 NOSE LANDING GEAR UPLOCK SWITCH ASSEMBLY, LINKAGE AND ATTACHING PARTS		
-4	10682A-200	SWITCH, Landing gear control (CARM) (81839)	1	
	ATTACHING PARTS			
	7S13CNS832-8A	SCREW, 100° flush head corrosion-resistant (NA) (89372)	4	
		---*---		
-5		*1 MAIN LANDING GEAR WHEEL DOOR CLOSE SWITCH ASSEMBLY, LINKAGE AND ATTACHING PARTS		
-6		*1 MAIN LANDING GEAR UPLOCK SWITCH ASSEMBLY, LINKAGE AND ATTACHING PARTS		
	209-54115	CONSOLE ASSEMBLY, LH forward (see figures 300 and 301 for complete breakdown)	1	
-7	MS25028-6	. SWITCH (landing light)	1	
-8	90	. CIRCUIT BREAKER (landing and approach light control and landing gear warning) (MEH) (76374)	1	ET
	MS25017-5	. CIRCUIT BREAKER (landing and approach light control and landing gear warning)	1	FR
	209-54163	COVER ASSEMBLY, RH radio compartment electrical junction box (see figures 308 and 309 for complete breakdown)	1	
-9	93	. CIRCUIT BREAKER (landing light power) (MEH) (76374)	1	ET
	MS25017-20	. CIRCUIT BREAKER (landing light power)	1	FR
	209-54135	PANEL ASSEMBLY, RH radar bay complete (see figure 307 for complete breakdown)	1	
-10	AN3320-1	. RELAY (landing light)	1	
-11	AN365-832	NUT	2	
-12	2W18-8	WASHER, Flat (NA) (89372)	1	
-13	AN515-8R8	SCREW	1	
-14	AN365-1032	NUT	2	
-15	2W18-10M	WASHER, Flat (NA) (89372)	2	
-16	AN3-4A	BOLT	1	
-17	194-54193-31	SUPPORT ASSEMBLY, Electric landing light lamp (supersedes 194-54193 for future procurement)	1	QC
-18	4580	LAMP (landing light) (GE) (95412)	1	
-19	295202-8	GROMMET (UC) (61864)	1	

NOTE: The above information was compiled from 209-54002, Page 59 (F change)
*1 See Landing Gear Sequencing System for breakdown

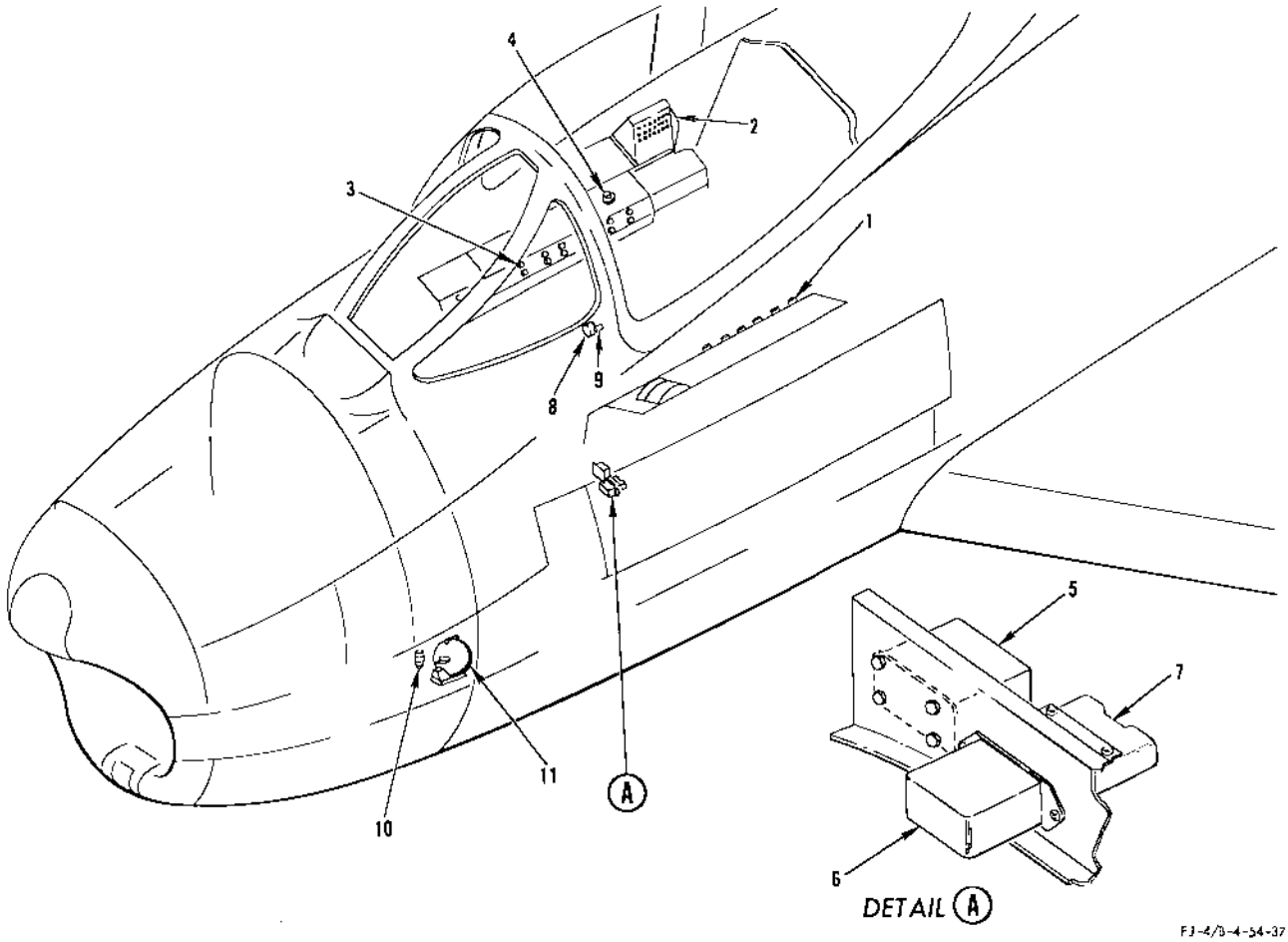

FIGURE 262 - LIQUID OXYGEN QUANTITY INDICATING SYSTEM - APPLICABLE TO AIRCRAFT CODED (BS)

FIGURE & INDEX NO.	PART NUMBER	1 2 3 4 5 6 7 NOMENCLATURE	UNITS PER ASSY.	USABLE ON CODE	S/C NO.
262	209-54115	CONSOLE ASSEMBLY, LH forward (see figures 300 and 301 for complete breakdown)	1		
-1	AN3161P5	. CIRCUIT BREAKER (speed brake and oxygen indicator)	1	BS	
	209-54189	PANEL ASSEMBLY, Circuit breaker and fuse cockpit RH rear (see figure 314 for complete breakdown)	1		
	209-54472	PANEL ASSEMBLY, Circuit breaker and fuse cockpit RH rear (see figure 319 for complete breakdown)	1		
-2	312001	. FUSE (inverter warning and oxygen indicator phase C) (LTF) (75915)	1	FX	
	312001	. FUSE (oxygen indicator) (LTF) (75915)	1	FR	
	209-54026	CONSOLE ASSEMBLY, RH forward (see figures 305 and 306 for complete breakdown)	1		
-3	90	. CIRCUIT BREAKER (warning light test and rudder pedal shaker) (MEH) (76374)	1	FX	
	MS25017-5	. CIRCUIT BREAKER (warning light test and rudder pedal shaker)	1	FR	
-4	14PB1	. SWITCH (warning light test) (MCS) (91929)	1		
-5	Model 57	CONTROL UNIT (warning light dimming) (PRJ) (98468) (interchangeable with D-8545-1 (GMC) (72914))	1	FX	
	ATTACHING PARTS				
	AN515-8R8	SCREW	4	FX	
	2W18-8M	WASHER, Flat (NA) (89372)	8	FX	
	AN365-832	NUT	4	FX	
	---*---				
-6	9220-PM	RELAY (auxiliary warning light dimming) (LR) (35344)	1	FR	
-7	RW20G501	RESISTOR (low level liquid oxygen warning light dimming) (MIL-R-26C)	1	RN	
	ATTACHING PARTS				
	AN507-1032R14	SCREW	2	RN	
	2W18-10M	WASHER, Flat (NA) (89372)	2	RN	
	AN365-1032	NUT	2	RN	
	---*---				
-8	14740	INDICATOR (oxygen quantity) (ARO) (03990) (interchangeable with JG-120A-25 (MHA) (94580))	1	BS	
-9	A3074R	LIGHT ASSEMBLY (low oxygen warning light) (RHS) (81640)	1	BS	
-10	14746	AMPLIFIER (oxygen) (ARO) (03990) (interchangeable with EG70A6 (MHA) (94580))	1	BS	
-11	14460	CONTAINER (ARO) (03990) (see Oxygen System)	1	BS	

NOTE: The above information has been compiled from 209-54002, Page 99 (F change)

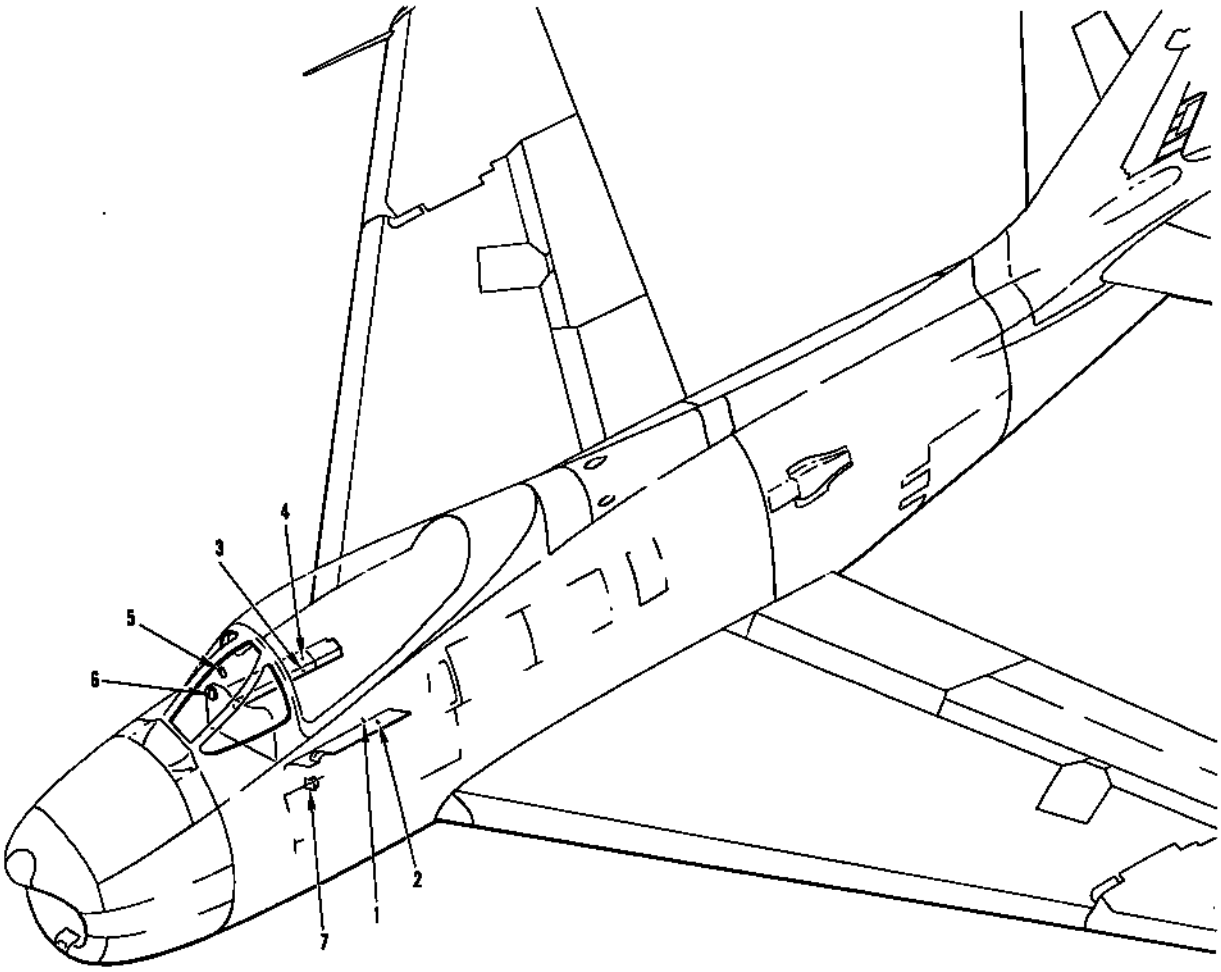

FJ-4/B-4-54-38

FIGURE 267 - MANUAL FUEL CONTROL

FIGURE & INDEX NO.	PART NUMBER	1 2 3 4 5 6 7 NOMENCLATURE	UNITS PER ASSY.	USABLE ON CODE	S/C NO.
267	209-54115	CONSOLE ASSEMBLY, LH forward (see figures 300 and 301 for complete breakdown)	1		
-1	91	. CIRCUIT BREAKER (alternate trim and manual fuel control) (MEH)	1	ET	
	MS25017-10	. CIRCUIT BREAKER (alternate trim and manual fuel)	1	FR	
-2	AN3021-3	. SWITCH (engine manual fuel control)	1		
	209-54026	CONSOLE ASSEMBLY, RH forward (see figures 305 and 306 for complete breakdown)	1		
-3	90	. CIRCUIT BREAKER (warning light test and rudder pedal shaker) (MEH)	1	ET	
	MS25017-5	. CIRCUIT BREAKER (warning light test and rudder pedal shaker)	1	FR	
-4	14PB1	. SWITCH (warning light test) (MCS)	1		
-5	181-540102-25	CAP ASSEMBLY, Warning light (manual fuel control) (KOR)	1	U	
	204	BASE (KOR)	1	U	
	209-54184-25	CAP ASSEMBLY, Warning light (manual fuel control) (KOR)	1	GA	
	204AK	BASE (KOR)	1	GA	
	AN3121-313	LAMP	2	FS	
	209-510108	PANEL ASSEMBLY, Pilots instrument complete (see figure 318 for complete breakdown)	1		
-6	209-54184-41	. CAP ASSEMBLY, Warning light (manual fuel control) (KOR)	1	FR	
	204AM	. BASE (KOR)	1	FR	
	AN3121-313	. LAMP	2	FR	
-7	Model 57	CONTROL UNIT (warning light dimming) (PRJ) (interchangeable with D-8545-1 (GMC))	1		
	ATTACHING PARTS				
	AN515-8R8	SCREW	4		
	ZW18-8M	WASHER, Flat (NA)	8		
	AN365-832	NUT	4		

---*---

NOTE: The above information has been compiled from 209-54002, page 72 (E change)

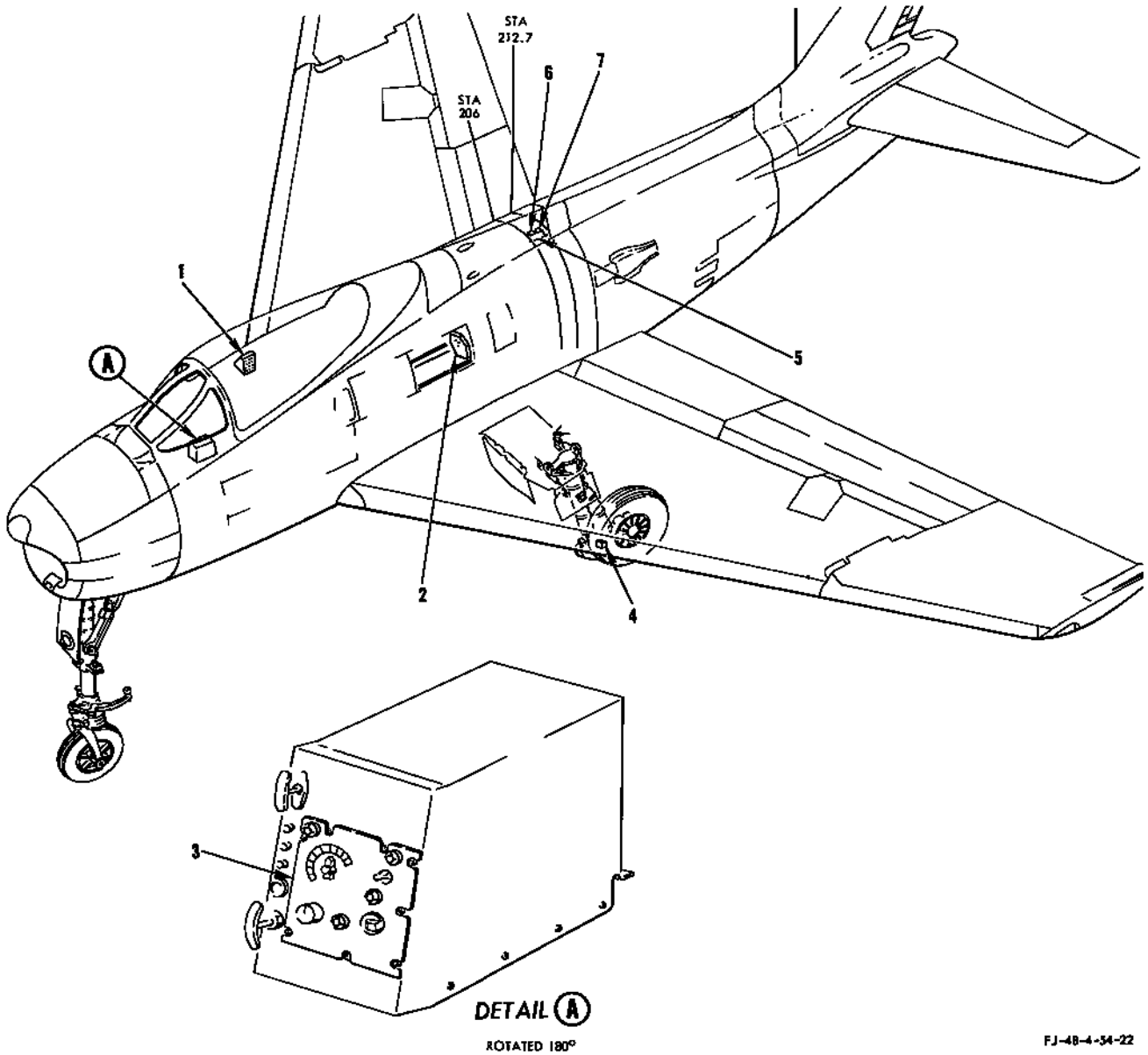

FIGURE 268 - MISSILE SYSTEM PERMANENT PROVISIONS - APPLICABLE TO AIRCRAFT CODED (KY)

FIGURE & INDEX NO.	PART NUMBER	1 2 3 4 5 6 7 NOMENCLATURE	UNITS PER ASSY.	USABLE ON CODE	S/C NO.
268-1	209-54472-11	PANEL ASSY, Circuit breaker and fuse cockpit RH rear complete (see figure 319 for breakdown)	1	NT	517, 522, 524
	209-54472-21	PANEL ASSY, Circuit breaker and fuse cockpit RH rear complete (see figure 319 for breakdown)	1	ME	517, 522, 524
	MS25017-20	. CIRCUIT BREAKER (missile power stations 1 and 6)	1	KY	
	MS25017-15	. CIRCUIT BREAKER (bomb and gun trigger)	1	KY	
-2	209-540110-31	PANEL ASSY, Circuit breaker station 156 LH side (see figure 304 for breakdown)	1	NT	525
	209-540110-41	PANEL ASSY, Circuit breaker station 156 LH side (see figure 304 for breakdown)	1	ME	525
	MS25017-5	. CIRCUIT BREAKER (ground safety and overvoltage)	1	KY	
	312001	. FUSE (missile phase A) (LTF) (75915)	1	KY	
	312001	. FUSE (missile phase C) (LTF) (75915)	1	KY	
	209-54226-411	SHIELD ASSY, Center electrical pedestal complete (see figure 295 for breakdown)	1	KY	
-3	G-9515-1	. CONTROL BOX ASSY (bomb and missile) (GMC) (72914) (superseded by G-9515-1A (GMC) (72914) for future procurement)	1	KY	520, 525
	G-9515-1A	. CONTROL BOX ASSY (bomb and missile) (GMC) (72914) (supersedes G-9515-1 for future procurement)	1	KY	
-4	209-54886	SWITCH ASSY, Main landing gear ground safety (see figure 259 for breakdown)	1	Z	
-5	209-543149	BRACKET ASSY, Electrical missile relay complete (see figure 227 for breakdown) (added by Service Change No. 525 to aircraft coded (KX)	1	KY	
-6	9220-PM	. RELAY (missile unlatched) (LR) (35344)	1	KY	
-7	9220-PM	. RELAY (missile AC power) (LR) (35344)	1	KY	

NOTE: The above information has been compiled from 209-54002, Page 103A

BULLPUP CONTROL POD ELECTRICAL EQUIPMENT - APPLICABLE TO AIRCRAFT CODED (KY)

FIGURE & INDEX NO.	PART NUMBER	1	2	3	4	5	6	7	NOMENCLATURE	UNITS PER ASSY.	USABLE ON CODE	S/C NO.
269	209-63202-71	*1	PACKAGE, Provisions for external stores (see Armament Section for further breakdown) (Package Nos. H001 - H005)							1	KY	
	209-63202-171	*1	PACKAGE, Provisions for external stores (see Armament Section for further breakdown) (Package Nos. H006 and subsequent)							1	KY	
	209-68214	.	POD ASSEMBLY, Bullpup control (used on 209-63202-71 only) (see Armament Section for further breakdown)							1	KY	
	209-68214-11	.	POD ASSEMBLY, Bullpup control (used on 209-63202-171 only) (see Armament Section for further breakdown)							1	KY	
	244-71010	.	.	ANTENNA ASSEMBLY, Radio Bullpup guidance (used on 209-68214 only) (superseded by 244-71010-21 for future procurement)						1	KY	
	244-71010-21	.	.	ANTENNA ASSEMBLY, Radio Bullpup guidance (used on 209-68214-11 only) (supersedes 244-71010 for future procurement)						1	KY	
	ATTACHING PARTS											
	AN3-4A	.	.	BOLT						6	KY	
	2W18-10M	.	.	WASHER, Flat (NA) (89372)						6	KY	
	---*---											
-1	209-71213	.	.	.	CABLE ASSEMBLY, Radio missile guidance coaxial					1	KY	
-2	UG21B/U	.	.	.	.	PLUG (AMP) (02660)				2	KY	
-3	UG27C/U	.	.	.	.	RIGHT ANGLE (AMP) (02660)				1	KY	
-4	UG58A/U	.	.	.	RECEPTACLE (AMP) (02660)					1	KY	
-5	UG57B/U	.	.	.	STRAIGHT ADAPTER (AMP) (02660)					1	KY	
-6	UG28A/U	.	.	.	TEE (AMP) (02660)					1	KY	
-7	UG21B/U	.	.	.	PLUG (AMP) (02660)					1	KY	
-8	UG27C/U	.	.	.	RIGHT ANGLE (AMP) (02660)					1	KY	
	209-543217	.	.	ELECTRICAL EQUIPMENT, Bullpup control pod (used on 209-68214 only)						1	KY	
	244-54063	.	.	ELECTRICAL EQUIPMENT, Bullpup control pod (used on 209-68214-11 only)						1	KY	
-9	209-543210	.	.	.	BOX ASSEMBLY, Electrical Bullpup guidance relay (see figure 269A for breakdown)					1	KY	
	ATTACHING PARTS											
-10	AN520-10R8	.	.	.	SCREW					4	KY	
-11	2W18-10M	.	.	.	WASHER, Flat (NA) (89372)					4	KY	
	---*---											
-12	244-54315	.	.	.	SHELF ASSEMBLY, Electrical Bullpup control pod (used on 244-54063 only)					1	KY	
-13	294189-B-12	.	.	.	.	GROMMET (MKL) (76530)				1	KY	
-14	244-54316	.	.	.	.	PLATE ASSEMBLY, Electrical Bullpup relay box				1	KY	
	ATTACHING PARTS											
	AN515-4R8	.	.	.	.	SCREW				4	KY	
	2W18-4L	.	.	.	.	WASHER, Flat (NA) (89372)				4	KY	
	---*---											
-15	244-54309	.	.	.	.	HARNESS ASSEMBLY, Electrical Bullpup control pod				1	KY	
	ATTACHING PARTS											
	MS21919WDG7	.	.	.	.	CLAMP				3	KY	
	AN520-10R8	.	.	.	.	SCREW				3	KY	
	2W18-10M	.	.	.	.	WASHER, Flat (NA) (89372)				3	KY	
	---*---											
-16	AN515-8R8	.	.	.	.	SCREW				16	KY	
	AN365-832	.	.	.	.	NUT				16	KY	
	2W18-8L	.	.	.	.	WASHER, Flat (NA) (89372)				32	KY	
	AN74A3	.	.	.	.	BOLT				4	KY	
	MS35337-44	.	.	.	.	LOCK WASHER				4	KY	
-17	209-68233	.	.	.	.	SHELF ASSEMBLY, Bullpup control pod equipment				1	KY	
-18	244-54305	.	.	.	.	BOX ASSEMBLY, Electrical Bullpup guidance relay (see figure 269A for breakdown)				1	KY	
	ATTACHING PARTS											
-19	AN520-10R8	.	.	.	.	SCREW				4	KY	
-20	2W18-10M	.	.	.	.	WASHER				4	KY	
	---*---											
-21	MS91418-2BFS	.	.	.	MOUNT (forward) (GFP)					2	KY	
-22	MS91418-2BCS	.	.	.	MOUNT (rear) (GFP)					2	KY	
	ATTACHING PARTS											
-23	AN515-8R8	.	.	.	SCREW (used on 209-543217 only)					16	KY	
	2W18-8L	.	.	.	WASHER, Flat (NA) (89372) (used on 209-543217 only)					32	KY	
	AN365-832	.	.	.	NUT (used on 209-543217 only)					16	KY	
	AN74A3	.	.	.	BOLT (used on 209-543217 only)					4	KY	
	MS35337-44	.	.	.	LOCK WASHER (used on 209-543217 only)					4	KY	
	---*---											
-24	293-0489055	.	.	.	TRANSMITTER (GFE)					1	KY	
-25	MDF-3	.	.	.	FUSE (spare) (BUS) (71400)					3	KY	
-26	D-9880-1	.	.	.	GRIP ASSEMBLY, Weapons guidance control (GMC) (72914) (used on 209-543217 only)					1	KY	
	D-9880A-1	.	.	.	GRIP ASSEMBLY, Weapons guidance control (GMC) (72914) (used on 244-54063)					1	KY	
	AN3102A-14S-6P	.	.	.	.	CONNECTOR				1	KY	
	10094	.	.	.	.	CONNECTOR, Dummy (GMC) (72914)				1	KY	
-27	209-540152-31	.	.	.	HARNESS ASSEMBLY, Electrical control pod and pylon Bullpup (used on 209-543217 only)					1	KY	
	209-540152-41	.	.	.	HARNESS ASSEMBLY, Electrical control pod and pylon Bullpup (used on 244-54063 only)					1	KY	
-28	209-543220	.	.	.	BRACKET ASSEMBLY, Electrical Bullpup missile wiring stowage (used on 209-543217 only)					1	KY	

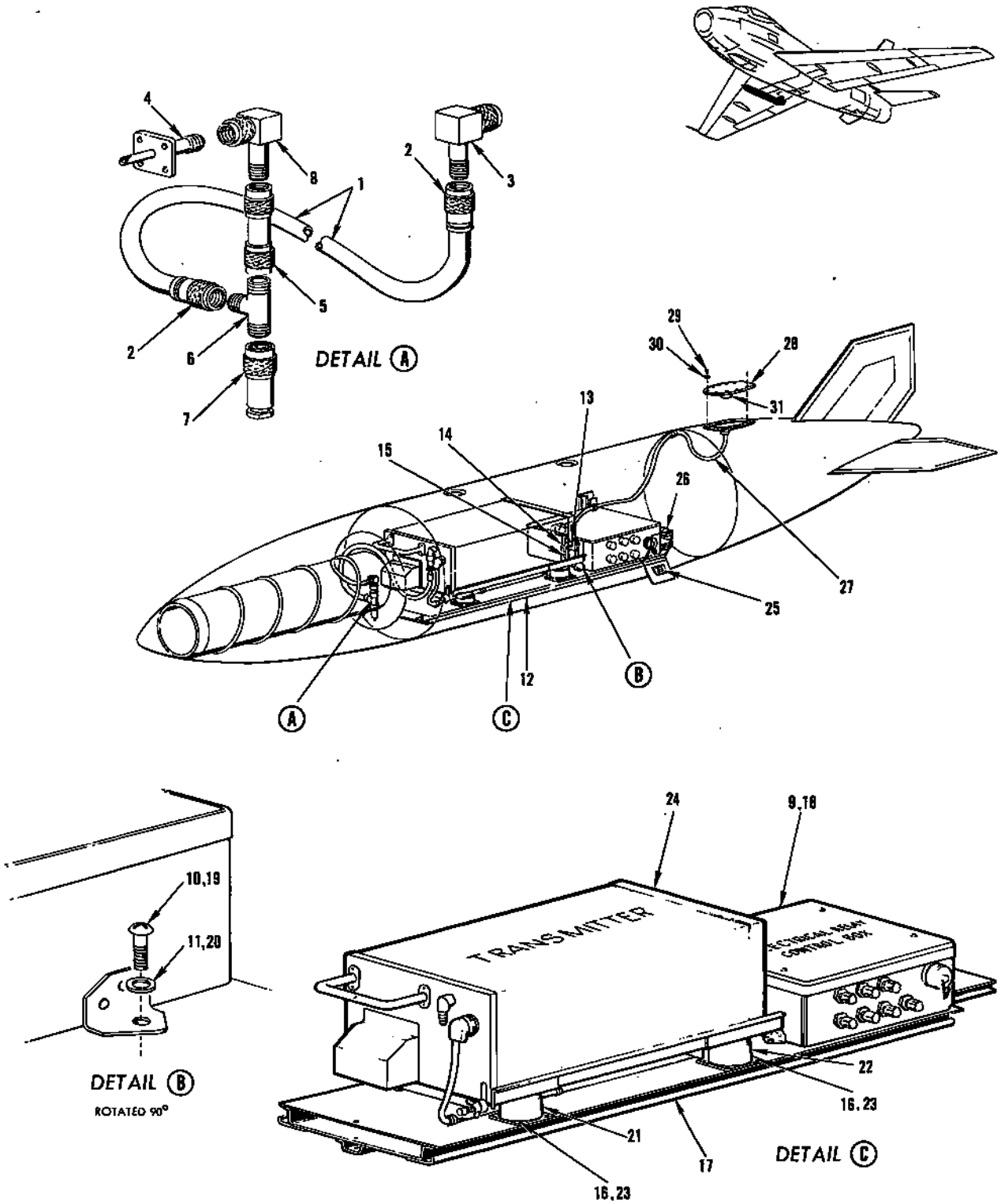

FIGURE 269 - BULLPUP CONTROL POD ELECTRICAL EQUIPMENT - APPLICABLE TO AIRCRAFT CODED (KY)

BULLPUP CONTROL POD ELECTRICAL EQUIPMENT - APPLICABLE TO AIRCRAFT CODED (KY)

FIGURE & INDEX NO.	PART NUMBER	1	2	3	4	5	6	7	NOMENCLATURE	UNITS PER ASSY.	USABLE ON CODE	S/C NO.
269	209-543220-3	.	.	.					BRACKET ASSEMBLY, Electrical Bullpup missile wiring stowage -- (used on 244-54063 only)	1	KY	
	ATTACHING PARTS											
-29	7S15-10R8	.	.	.					SCREW, 100° flush head (NA) (89372) ----------	9	KY	
-30	2W16-10M	.	.	.					WASHER, Flat (NA) (89372)----------	9	KY	
	---*---											
-31	97-181-20	.	.	.		.			RECEPTACLE, Dummy (AMP) (02660) (used on---------- 209-543220 only)	1	KY	

NOTE: *1 Package applicable to aircraft coded (KX) with Service Change No. 525 incorporated

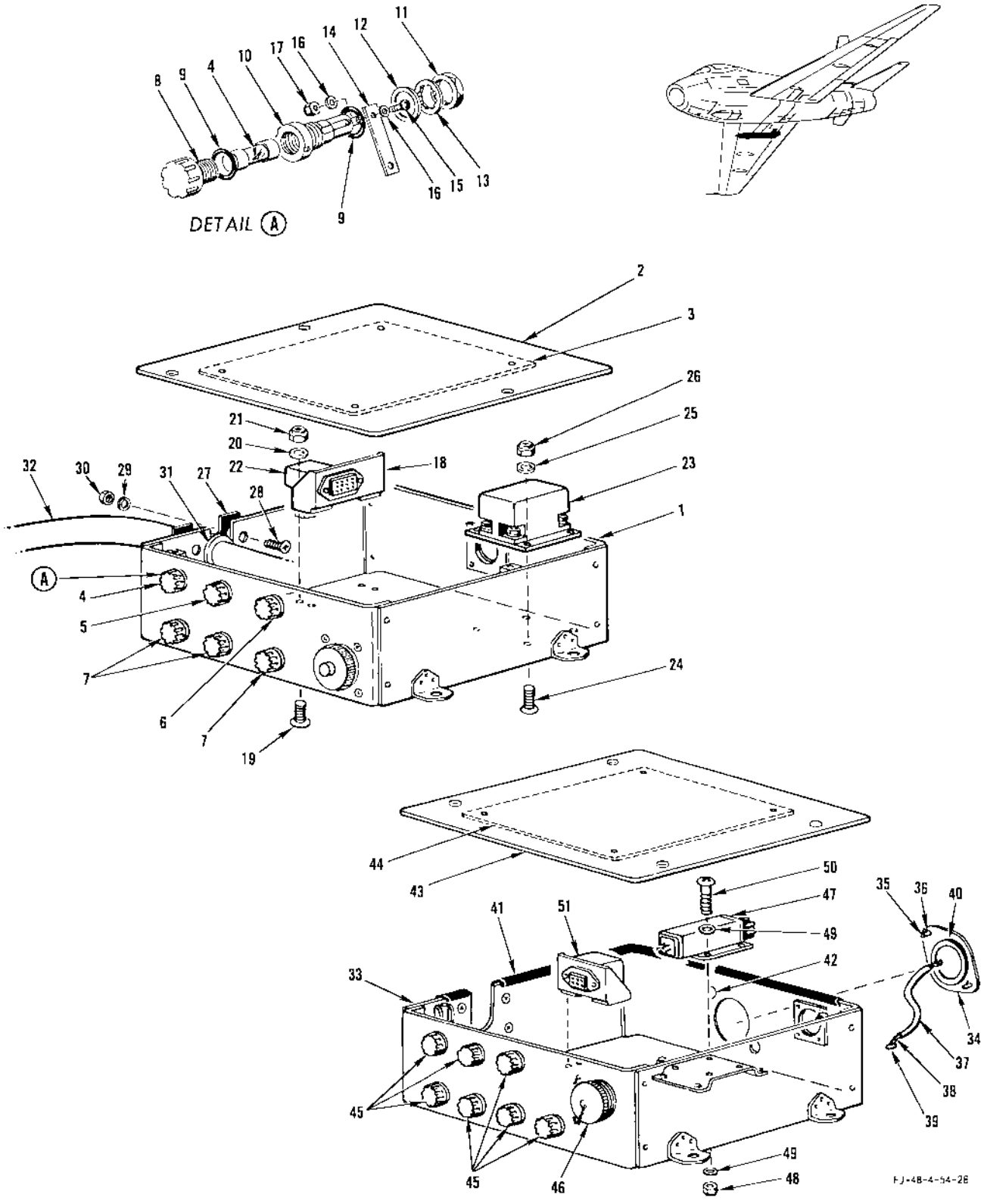

FIGURE 269A - ELECTRICAL BULLPUP GUIDANCE RELAY BOX ASSEMBLIES - APPLICABLE TO AIRCRAFT CODED (KY)

NORMAL AND ALTERNATE TRIM - APPLICABLE TO AIRCRAFT CODED (ET)

FIGURE & INDEX NO.	PART NUMBER	1 2 3 4 5 6 7 NOMENCLATURE	UNITS PER ASSY.	USABLE ON CODE	S/C NO.
270-48	AN515-8R8	. SCREW	4	FS	
-49	2W18-8L	. WASHER, Flat (NA) (89372)	6	FS	
-50	1J1-2-3-12	. JUMPER, Wire (NA) (89372)	1	FS	
-51	2W1AL12-12-16	. WASHER, Plain (NA) (89372)	1	FS	
-52	AN365-832	. NUT	2	FS	
-53	AN365-632	. NUT	4	FS	
-54	2W18-6L	. WASHER, Flat (NA) (89372)	4	FS	
-55	CYZP204	. RELAY (BCC) (05624)	1	FS	
-56	7001-J	. SHOCKMOUNT (RAI) (51116)	4	FS	
-57	AN515-8R5	. SCREW	4	FS	
-58	AN936A8	. WASHER	4	FS	
-59	2W18-8L	. WASHER, Flat (NA) (89372)	4	FS	
-60	209-54293	. BOX, Mach trim control assembly of	1	FS	
-61	AN3102A18-1P	. RECEPTACLE	1	FS	
-62	AN365-440	. NUT	4	FS	
-63	2W18-4L	. WASHER, Flat (NA) (89372)	4	FS	
-64	AN515-4R7	. SCREW	4	FS	
-65	209-51151-11	PANEL ASSEMBLY, Mach trim switch	1	ET	
-66	MS25101-3	. LIGHT FIXTURE (mach trim)	1	ET	
-67	209-51140-5	. PLATE, Mach trim identification	1	ET	
-68	209-51150-11	. BRACKET ASSEMBLY, Mach trim switch mounting	1	ET	
-69	8857K19	. SWITCH (mach trim) (CUT) (15605)	1	ET	
-70	209-51142	COVER, Mach trim and yaw damper switch	1	ET	
	ATTACHING PARTS				
-71	7S14CN632-12A	SCREW, Round head corrosion-resistant (NA) (89372)	2	ET	
-72	2W18-6L	WASHER, Flat (NA) (89372)	4	ET	
-73	AN365-632	NUT	2	ET	
	---*---				
	209-54161	BOX ASSEMBLY, Radio compartment electrical junction (see figure 308 for complete breakdown)	1	ET	
-74	9057-48F	. RELAY (lateral trim indicator control) (LR) (35344)	1	ET	
	209-51005	PANEL ASSEMBLY, Pilots instrument complete (see figure 315 for complete breakdown)	1		
-75	SP103-11	. INDICATOR (trim position) (KWC) (75312)	1	Y	
	8DJ51GBH-4	. INDICATOR (trim position) (GE) (95412)	1	FS	
-76	181-54110	COVER, Electric relay protection	1	ET	
	9057-48F	RELAY (longitudinal relay indicator) (LR) (35344)	1	ET	
	ATTACHING PARTS				
	AN515-8R10	SCREW	4	ET	
	2W18-8L	WASHER, Flat (NA) (89372)	4	ET	
	AN363-832	NUT	4	ET	
	---*---				
-77	ED602	BOX ASSEMBLY, Mach trimming control (NAQ) (88978) (see Surface and Secondary Controls)	1	ET	
-78	31586-2	ACTUATOR (lateral trim) (AIR) (99193) (see Surface and Secondary Controls) (for breakdown see Technical Manual NA 03-5CHA-511)	1	ET	
-79	D-1840-1	ACTUATOR (rudder trim) (HOOV) (81817) (see Surface and Secondary Controls)	1	Y	
	D-1830-2	ACTUATOR (rudder trim) (HOOV) (81817) (see Surface and Secondary Controls)	1	FS	
-80	D-1850-1	ACTUATOR (longitudinal trim) (HOOV) (81817) (see Surface and Secondary Controls)	1	Y	
	33090	ACTUATOR (longitudinal trim) (AIR) (99193) (see Surface and Secondary Controls)	1	FS	
	209-54705	SUPPORT ASSEMBLY, Aileron neutral position indicating switch (superseded by 209-54705-11 for future procurement)	1	ET	
	209-54705-11	SUPPORT ASSEMBLY, Aileron neutral position indicating switch (supersedes 209-54705 for future procurement)	1	ET	
	ATTACHING PARTS				
-81	AN365-428	NUT	1	ET	
-82	2W18-416	WASHER, Flat (NA) (89372)	2	ET	
-83	AN174-25A	BOLT	1	ET	
-84	AN365-1032	NUT	1	ET	
-85	2W18-10	WASHER, Flat (NA) (89372)	2	ET	
-86	AN3-6A	BOLT	1	ET	
	---*---				
-87	AN365-1032	. NUT	2	ET	
-88	2W18-10M	. WASHER, Flat (NA) (89372)	4	ET	
-89	AN520-10R26	. SCREW	2	ET	
-90	209-54707	. COVER, Aileron neutral position indicating switch	1	ET	
-91	AN931-3-5	. GROMMET	1	ET	
-92	AN365-632	. NUT	2	ET	
-93	2W18-6	. WASHER, Flat (NA) (89372)	4	ET	
-94	AN515-6R18	. SCREW	2	ET	
-95	209-54706	. INSULATOR, Aileron neutral position indicating switch	1	ET	
-96	BZ-2RW-T8225	. SWITCH (aileron neutral position) (MCS) (91929) (superseded by 1HS57 (MCS) (91929) for future procurement)	1	MF	
	1HS57	. SWITCH (aileron neutral position (MCS) (91929) (supersedes BZ-2RW-T8225- (MCS) (91929) for future procurement)	1	MJ	
-97	209-54704	. SUPPORT, Aileron neutral position indicating switch	1	ET	
-98	NAS43DD3-76	. SPACER (209-54705-11 only)	2	ET	

NOTE: The above information has been compiled from 209-54002, page 77 (G change) and page 77.2 (F change)

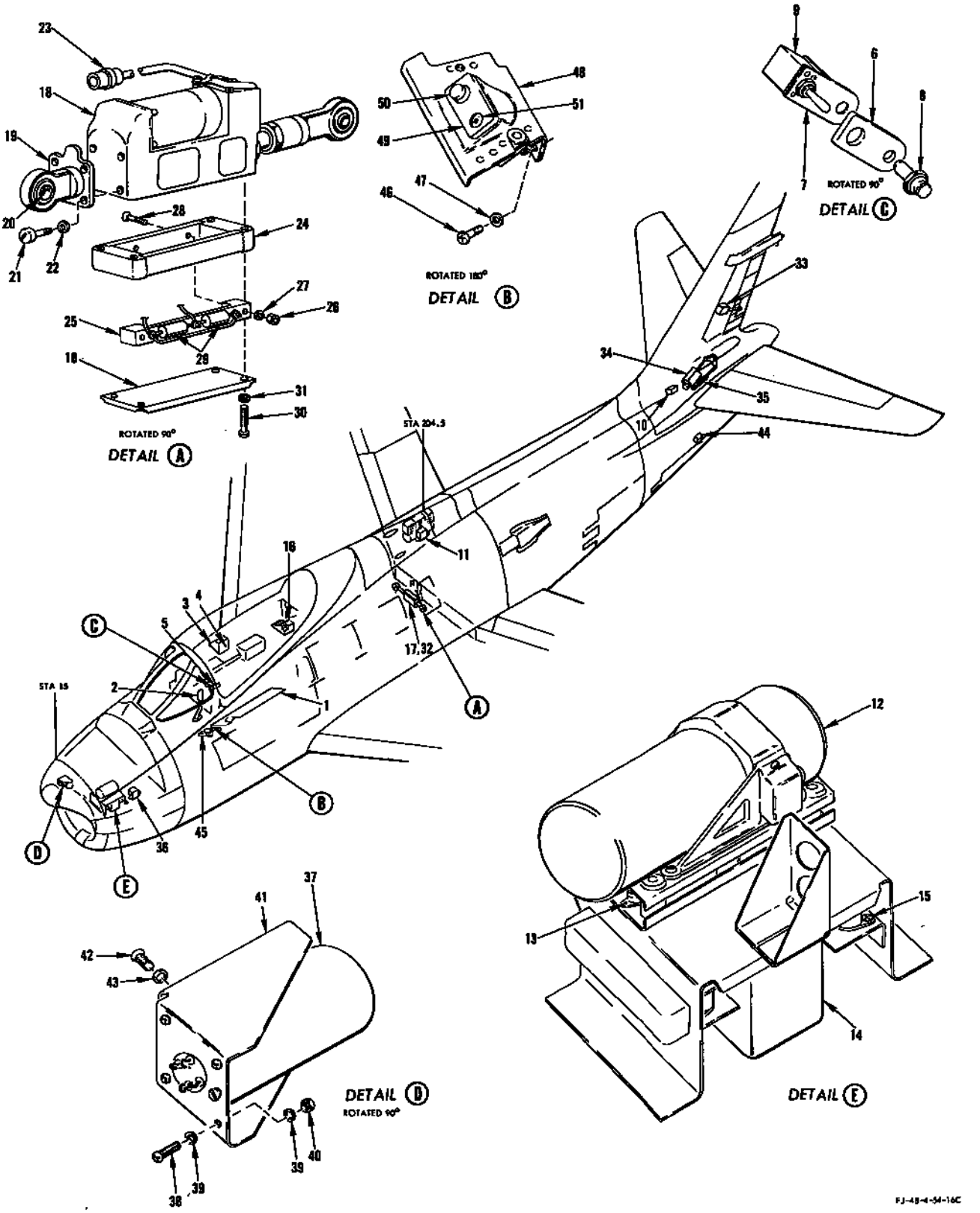

FIGURE 271 - NORMAL AND ALTERNATE TRIM - APPLICABLE TO AIRCRAFT CODED (FR)

NORMAL AND ALTERNATE TRIM - APPLICABLE TO AIRCRAFT CODED (FR)

FIGURE & INDEX NO.	PART NUMBER	1 2 3 4 5 6 7 NOMENCLATURE	UNITS PER ASSY.	USABLE ON CODE	S/C NO.
271-1	209-54115	CONSOLE ASSEMBLY, LH forward (see figure 301 for complete breakdown)	1		
	MS25017-5	. CIRCUIT BREAKER (oil pressure indicator, trim indicator and landing gear position indicator)	1	MD	
	MS25017-5	. CIRCUIT BREAKER (trim indicator and landing gear position indicator)	1	ME	
	MS25017-10	. CIRCUIT BREAKER (normal and rudder trim)	1	FR	
	MS25017-10	. CIRCUIT BREAKER (alternate trim and manual fuel)	1	FR	
	5050	. SWITCH (alternate trim) (MSE) (81579)	1	FR	
	7664K3	. SWITCH (flight control trim) (CUT) (15605)	1	FR	
	AN3027-7	. SWITCH (rudder trim)	1	FR	
-2	PEI-116B	GRIP (pilots control stick) (PIQA) (81380) (supersedes PEI-116A (PIQA) (81380) for future procurement)	1	KX	481
	PEI-116C	GRIP (pilots control stick) (PIQA) (81380)	1	KY	
-3	209-54472	PANEL ASSEMBLY, Circuit breaker and fuse cockpit RH rear (see figure 319 for complete breakdown)	1		
-4	312001	. FUSE (position trim) (LTF) (75915)	1	FR	
-5	209-51151-31	PANEL ASSEMBLY, Mach trim switch	1	FR	
-6	209-51140-5	. PLATE, Mach trim identification	1	FR	
-7	209-51150-11	. BRACKET ASSEMBLY, Mach trim switch mounting	1	FR	
-8	MS25010-3A	. LIGHT ASSEMBLY (Mach trim)	1	FR	
-9	AN3021-3	. SWITCH (Mach trim)	1	FR	
-10	9057-48F	RELAY (longitudinal trim indicator control) (LR) (35344)	1	KY	
	ATTACHING PARTS				
	AN515-8R8	SCREW	2	KY	
	2W18-8L	WASHER, Flat (NA) (89372)	2	KY	
	---*---				
-11	9057-48F	RELAY (longitudinal trim indicator control) (LR) (35344)	1	KX	481
	9057-48F	RELAY (rudder trim indicator) (LR) (35344)	1	KY	
	ATTACHING PARTS				
	AN520-8R10	SCREW	2	FR	
	2W18-8L	WASHER, Flat (NA) (89372)	2	FR	
	---*---				
-12	24082-03	TRANSDUCER (Mach trim) (AIR) (99193) (superseded by 24222-03 (AIR) (99193) for future procurement)	1	PS	
	24222-03	TRANSDUCER (Mach trim) (AIR) (99193) (supersedes 24082-03 (AIR) (99193) for future procurement)	1	PT	
	ATTACHING PARTS				
-13	AN520-10R8	SCREW	4	FR	
	2W18-10M	WASHER, Flat (NA) (89372)	4	FR	
	---*---				
-14	42570	AMPLIFIER (longitudinal trim) (AIR) (99193) (superseded by 42570-1 (AIR) (99193) for future procurement)	1	KS	
	42570-1	AMPLIFIER (longitudinal trim) (AIR) (99193) (supersedes 42570 (AIR) (99193) for future procurement)	1	KT	
	ATTACHING PARTS				
-15	AN515-6R6	SCREW	8	FR	
	2W18-6	WASHER, Flat (NA) (89372)	16	FR	
	AN365-632	NUT	8	FR	
	---*---				
-16	209-54161	BOX ASSEMBLY, Radio compartment electrical junction RH (see figure 309 for complete breakdown)	1		
	9057-48F	. RELAY (lateral trim indicator control) (LR) (35344)	1	FR	
-17	209-54750	ACTUATOR ASSEMBLY, Aileron bungee trim low rate (superseded by 525202 (AIR) (99193) for future procurement) (209-54750 not to be used for replacement on any aircraft)	1	RQ	
	209-523365	. ACTUATOR ASSEMBLY, Aileron bungee trim	1	RQ	
-18	525162-1	. . ACTUATOR, Aileron bungee trim (AIR) (99193)	1	RQ	
	209-523356	. . FITTING ASSEMBLY, Aileron trim actuator end	1	RQ	
-19	209-523356-3	. . . STEEL BAR, Aileron trim actuator end fitting assembly	1	RQ	
-20	KSBG4S	. . . BEARING (HLF) (97613)	1	RQ	
-21	AN500AB8	. . SCREW	4	RQ	
-22	2W1AL11-9-23	. . WASHER, Plain (NA) (89372)	4	RQ	
-23	MS25183-14S2P	. . CONNECTOR	1	RQ	
-24	209-54751	. EXTENSION, Aileron trim actuator switch box assembly of	1	RQ	
-25	209-54752	. BOARD, Terminal mounting assembly of	1	RQ	
	ATTACHING PARTS				
-26	AN363-632	. NUT	2	RQ	
-27	2W17-6	. WASHER, Corrosion-resistant steel (NA) (89372)	2	RQ	
-28	AN507-632-10	. SCREW	2	RQ	
	---*---				
-29	ALBLO	. RESISTOR (OM) (44655)	2	RQ	
-30	AN500A6-16	. SCREW	4	RQ	
-31	AN935-6L	. WASHER	4	RQ	
-32	525202	ACTUATOR ASSEMBLY (aileron bungee trim) (AIR) (99193) (supersedes 209-54750 for future procurement)	1	RQ	
-33	D-1840-4	ACTUATOR ASSEMBLY (rudder trim) (HOOV) (81817) (see Surface and Secondary Controls)	1	FR	
-34	38090-2	ACTUATOR ASSEMBLY (longitudinal trim) (AIR) (99193) (see Surface and Secondary Controls)	1	FR	
-35	ANB451	POTENTIOMETER (type 910) (Fairchild Controls Corporation) (96797)	1	FR	
	ATTACHING PARTS				
	AN173-7A	BOLT	2	FR	
	2W18-10M	WASHER, Flat (NA) (89372)	4	FR	
	AN365-1032	NUT	2	FR	
	---*---				

NORMAL AND ALTERNATE TRIM - APPLICABLE TO AIRCRAFT CODED (FR)

FIGURE & INDEX NO.	PART NUMBER	1 2 3 4 5 6 7 NOMENCLATURE	UNITS PER ASSY.	USABLE ON CODE	S/C NO.
271-36	AN3311-2	RELAY (speed brake)	1	FR	
-37	J-3690	TIMER (Mach trim repeat cycle) (HYAW) (82227) (superseded by N-3603 (HYAW) (82227) for future procurement) (J-3690 not to be used for replacement)	1	RV	
	N-3603	TIMER (Mach trim repeat cycle) (HYAW) (82227) (supersedes J-3690 (HYAW) (82227) for future procurement)	1	RW	
	ATTACHING PARTS				
-38	AN515-6R7	SCREW	4		
-39	2W18-6L	WASHER, Flat (NA) (89372)	8		
-40	AN365-632	NUT	4		
	---*---				
-41	209-542108	BRACKET, Mach trim assembly of (repeat cycle timer)	1	FR	
	ATTACHING PARTS				
-42	AN520-10R8	SCREW	4	FR	
-43	2W18-10M	WASHER, Flat (NA) (89372)	4	FR	
	---*---				
-44	BZ-7RQ1T	SWITCH (aft speed brake position closed) (MCS) (91929)	1	FR	
	ATTACHING PARTS				
	AN515-6R18	SCREW	2	FR	
	2W18-6	WASHER, Flat (NA) (89372)	4	FR	
	AN365-632	NUT	2	FR	
	---*---				
-45	209-51197	PANEL ASSEMBLY, Take-off trim indicator complete	1	FR	
	ATTACHING PARTS				
-46	AN520-10R7	SCREW	2	FR	
-47	2W18-10M	WASHER, Flat (NA) (89372)	2	FR	
	---*---				
-48	181-51128	. PANEL ASSEMBLY, Pilots speed brake indicator	1	FR	
-49	181-51020-10	. REFRACTOR, Take-off trim position indicator identification assembly of	1	FR	
-50	MS25010-3	. LIGHT ASSEMBLY	1	FR	
	2W1AL30-22-16	. WASHER, Plain (NA) (89372)	1	FR	
-51	8DJ51GBH-4	. INDICATOR (take-off trim position) (GEMI) (97424)	1	FR	
	AN507UB6R4	. SCREW	1	FR	
	AN507B6R4	. SCREW	1	FR	

NOTE: The above information has been compiled from 209-54002, Page 77.3 (J change)

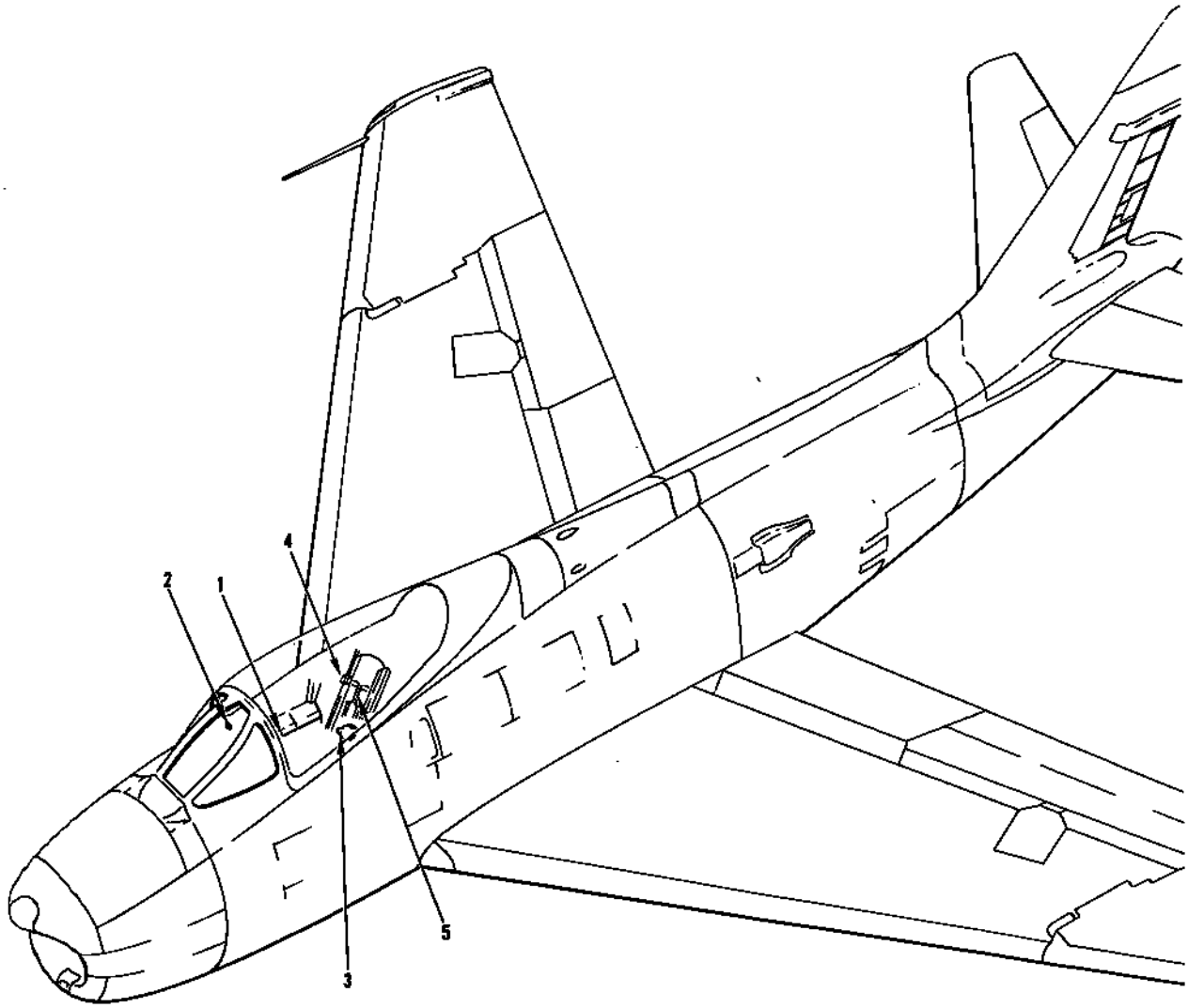

FJ-4-4-54-55A

FIGURE 272 - PILOTS SEAT ACTUATOR AND REEL

FIGURE & INDEX NO.	PART NUMBER	1 2 3 4 5 6 7 NOMENCLATURE	UNITS PER ASSY.	USABLE ON CODE	S/C NO.
272	209-54026	CONSOLE ASSEMBLY, RH forward (see figure 305 for complete breakdown) -----	1		
-1	92	. CIRCUIT BREAKER (seat actuator) (MEH) (76374)----------	1	ET	
	MS25017-15	. CIRCUIT BREAKER (seat actuator and utility receptacle ----------	1	FR	
-2	AN3021-7	SWITCH (pilots seat actuator) ----------	1		
	AN3225	GUARD ----------	1		
-3	10-1303-23S130	REEL ASSEMBLY, Inertia (ASE) (02860) (see Fwd Fus - Cockpit Furnishings) --- (for breakdown see Technical Manual AN 03-1-594)	1	ET	
-4	18090-S	. SWITCH, Inertia (ASE) (02860) ----------	1	ET	
-5	EM1400-1	ACTUATOR, Pilots seat (EMEG) (96212) (see Fwd Fus - Cockpit Furnishings) --- (for breakdown see Technical Manual NA 03-5CH-527)	1		

NOTE: The above information has been compiled from 209-54002, Page 71 (D change)

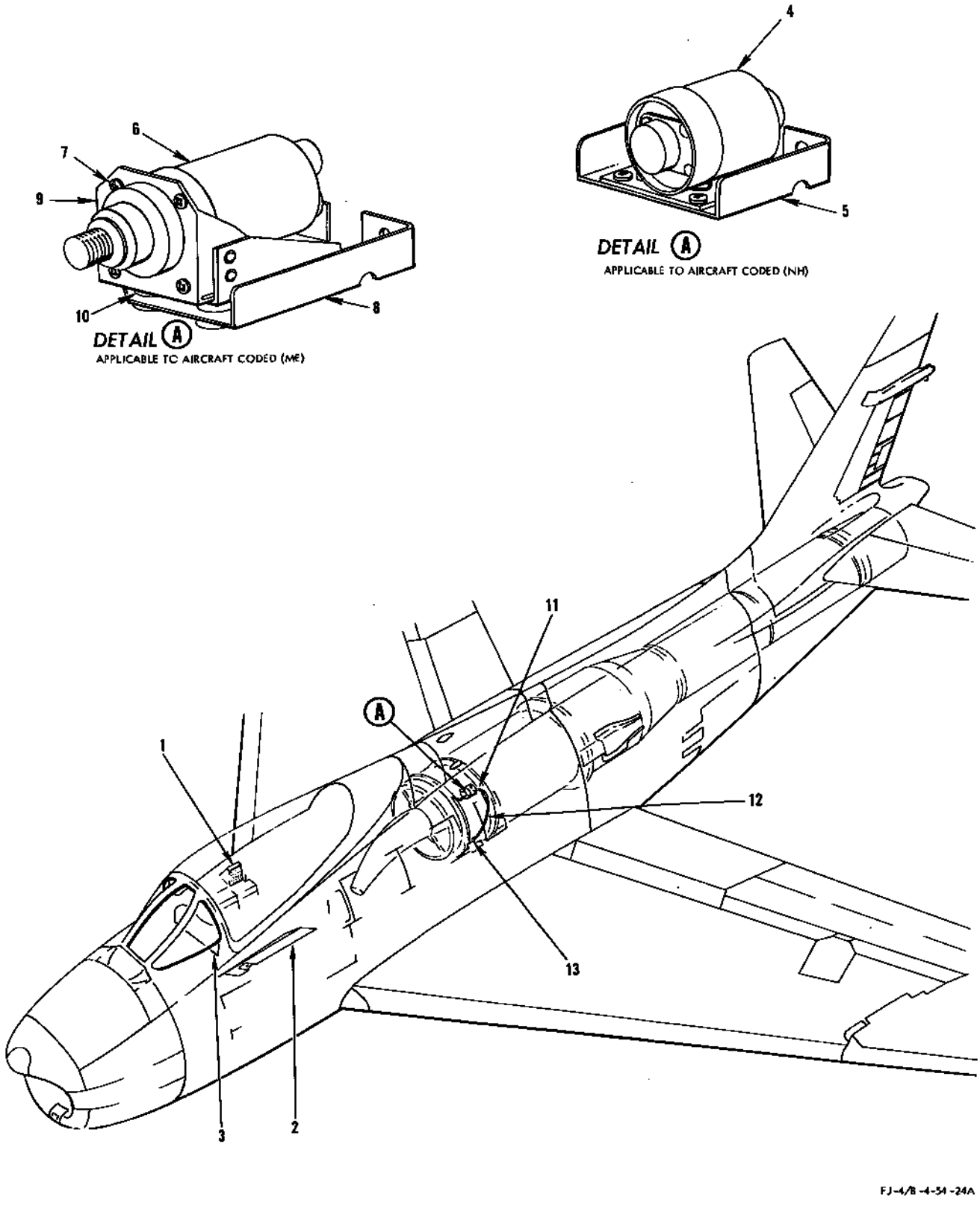

FIGURE 273 - OIL PRESSURE INDICATING SYSTEM

OIL PRESSURE INDICATING SYSTEM

FIGURE & INDEX NO.	PART NUMBER	1 2 3 4 5 6 7 NOMENCLATURE	UNITS PER ASSY.	USABLE ON CODE	S/C NO.
273-1	209-54189	PANEL ASSEMBLY, Circuit breaker and fuse cockpit RH rear (see figure 314 for complete breakdown)	1		
	90	. CIRCUIT BREAKER (oil pressure indicator and trim indicator and landing gear position indicator) (MEH) (76374)	1	ET	
	209-54472	PANEL ASSEMBLY, Circuit breaker and fuse cockpit RH rear (see figure 319 for complete breakdown)	1		
	312001	. FUSE (hydraulic and oil pressure indicator (LTF)) (75915)	1	ME	
-2	209-54115	CONSOLE ASSEMBLY, LH forward (see figures 300 and 301 for complete breakdown)	1		
	MS25017-5	. CIRCUIT BREAKER (oil press. ind and trim ind and LG position ind)	1	MD	
-3	209-51005	PANEL ASSEMBLY, Pilots instrument (see figures 315 and 317 for breakdown)	1	ET	460
	SP-103-16	. INDICATOR (oil pressure) (KWC) (75312)	1	CM	460
	8DJ51GBL-4	. INDICATOR (oil pressure) (GEMI) (98863) for breakdown see Technical Manual AN 05-55A-11)	1	FZ	460
	209-510108	PANEL ASSEMBLY, Pilots instrument (see figure 318 for complete breakdown)	1	FR	460
	8DJ51GBL-4	. INDICATOR (oil pressure) (GEMI) (98863)	1	MD	460
	SR-94-A	. INDICATOR (oil pressure) (UG) (61349) (interchangeable with 26800-A65A1-A3 (Montrose Division Bendix Aviation Corporation))	1		
-4	SW-2-E	SWITCH (oil pressure) (UG) (61349)	1	QJ	
	SW-2-A	SWITCH (oil pressure) (UG) (61349)	1	QH	
	ATTACHING PARTS				
	AN515-8R8	SCREW	4	QH	
	AN960D8	WASHER	4	QH	
	---*---				
-5	194-51109	BRACKET ASSEMBLY, Oil pressure switch (superseded by 194-51111 for future procurement)	1	Y	
	194-51111	BRACKET ASSEMBLY, Oil pressure switch (supersedes 194-51109 for future procurement)	1	QG	
	209-510117	TRANSMITTER ASSEMBLY, Oil pressure	1	ME	
-6	ST-104-H	. TRANSMITTER (oil pressure) (UG) (61349)	1	ME	
	ATTACHING PARTS				
-7	AN515-6R8	. SCREW	4	ME	
	2W18-6L	. WASHER, Flat (NA) (89372)	4	ME	
	---*---				
-8	194-51116	. BRACKET, Oil pressure transmitter mounting	1	ME	
-9	194-51115	. SUPPORT ASSEMBLY, Oil pressure transmitter	1	ME	
	ATTACHING PARTS				
	AN365-832	. NUT	4	ME	
	2W18-8	. WASHER, Flat (NA) (89372)	8	ME	
	AN515-8R22	. SCREW	4	ME	
	---*---				
-10	809-2	. . SHOCKMOUNT (RAI) (51116)	4	ME	
-11	AN833-4	ELBOW	1		
	AN6290-4	GASKET	1		
	AN924-4	NUT	1		
-12	MS28741-4-0184	HOSE ASSEMBLY	1		
-13	AN837-4	ELBOW	1		
	AN6290-4	GASKET	1		
	AN924-4	NUT	1		

NOTE: The above information has been compiled from 209-54002, Page 84 (F change) and Page 84.1 (A change)

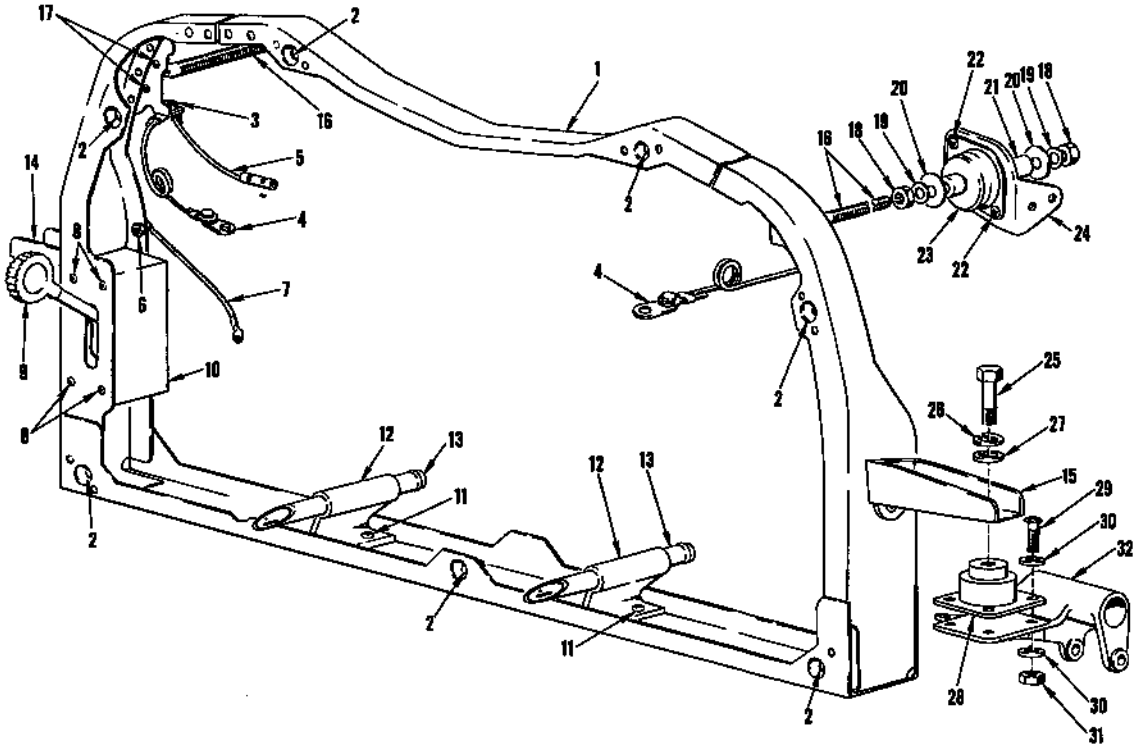

FIGURE 274 - PILOTS INSTRUMENT PANEL FRAME ASSEMBLY

FIGURE & INDEX NO.	PART NUMBER	1 2 3 4 5 6 7 NOMENCLATURE	UNITS PER ASSY.	USABLE ON CODE	S/C NO.
274	209-51114	FRAME ASSEMBLY, Pilots instrument panel complete	1		
-1	209-51004	. FRAME ASSEMBLY, Pilots instrument panel support	1		
-2	URF5	. . RECEPTACLE (DZ) (72794)	7		
-3	AN363C632	. NUT	2		
	2W1AL10-12-32	. WASHER, Plain (NA) (89372)	2		
	7S14CN632-10A	. SCREW, Round head corrosion-resistant (NA) (89372)	2		
-4	181-51017-10	. CORD ASSEMBLY, Instrument panel servicing stop	2		
-5	AN751A2	. JUMPER	1		
-6	AN363C632	. NUT	1		
	2W1AL10-12-32	. WASHER, Plain (NA) (89372)	3		
	7S14CN632-7A	. SCREW, Round head corrosion-resistant (NA) (89372)	1		
-7	AN749-1-5	. JUMPER	1		
-8	7S13CN832	. SCREW, 100° flush head corrosion-resistant (NA) (89372)	4		
-9	10682A-200	. SWITCH, Landing gear (CARM) (81839)	1		
-10	11101	. SHIELD (CARM) (81839)	1		
-11	7S14CN1032-12A	. SCREW, Round head corrosion-resistant (NA) (89372)	4		
	2W18-10	. WASHER, Flat (NA) (89372)	8		
	AN363CN1032	. NUT	4		
-12	209-51009	. SUPPORT, Instrument panel servicing slide	2		
-13	194-51014	. TUBE, Instrument panel servicing support	2		
-14	181-51007-1	. BRACKET ASSEMBLY, Instrument panel vertical support upper LH	1		
-15	131-51007-2	. BRACKET ASSEMBLY, Instrument panel vertical support upper RH	1		
	ATTACHING PARTS				
	7S14CN1032-12A	. SCREW, Round head corrosion-resistant (NA) (89372)	4		
	2W18-10	. WASHER, Flat (NA) (89372)	4		
	---*---				
-16	5B27D38-29	. BOLT, Instrument panel mounting (NA) (89372)	2		
	5B16	. BOLT, Retainer (NA) (89372)	2		
-17	7S14CN632-10A	. SCREW, Round head corrosion-resistant (NA) (89372)	4		
	2W18-6	. WASHER, Flat (NA) (89372)	8		
	AN363C632	. NUT	4		
-18	AN316C4R	NUT	4		
-19	AN935B416	WASHER	4		
-20	2W1AL16-32-51	WASHER, Plain (NA) (89372)	4		
-21	NAS43DD4-32	SPACER	2		
	181-51006-1	SUPPORT ASSEMBLY, Instrument panel upper stabilizer LH	1		
	181-51006-2	SUPPORT ASSEMBLY, Instrument panel upper stabilizer RH	1		

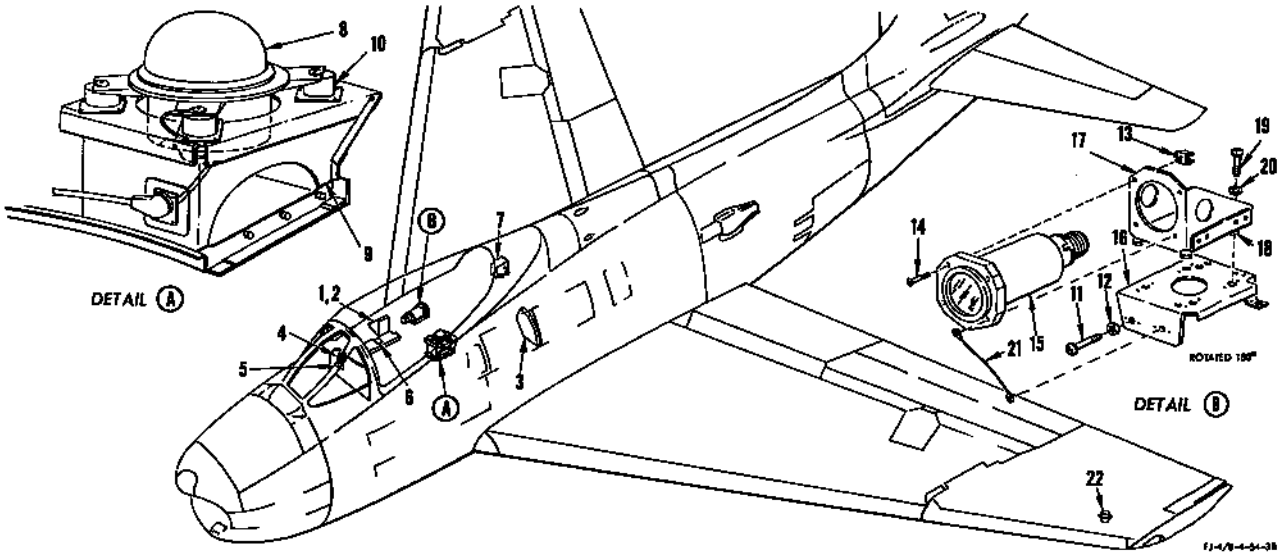

FIGURE 276 - POLAR PATH COMPASS

FIGURE & INDEX NO.	PART NUMBER	1 2 3 4 5 6 7 NOMENCLATURE	UNITS PER ASSY.	USABLE ON CODE	S/C NO.
276-1	209-54189	PANEL ASSEMBLY, Circuit breaker and fuse cockpit RH rear complete (see figure 314 for complete breakdown)	1		
	90	. CIRCUIT BREAKER (compass controller) (MEH) (76374)	1	ET	
	312001	. FUSE (compass coupler phase A) (LTF) (75915)	1	ET	
	312001	. FUSE (compass coupler phase C) (LTF) (75915)	1	ET	
	312001	. FUSE (directional gyro phase A) (LTF) (75915)	1	ET	
	312001	. FUSE (directional gyro phase C) (LTF) (75915)	1	ET	
	312001	. FUSE (radio magnetic indicator) (LTF) (75915)	1	ET	
-2	209-54472	PANEL ASSEMBLY, Circuit breaker and fuse cockpit RH rear complete (see figure 319 for complete breakdown)	1	FR	
	312001	. FUSE (radio magnetic indicator) (LTF) (75915)	1	HJ	
	312002	. FUSE (radio magnetic indicator) (LTF) (75915)	1	FL	
-3	209-540110	PANEL ASSEMBLY, Circuit breaker station 156 LH side (see figure 304 for breakdown)	1		
	MS25017-5	. CIRCUIT BREAKER (compass controller)	1	FR	
	312001	. FUSE (compass coupler phase A) (LTF) (75915)	1	FR	
	312001	. FUSE (compass coupler phase C) (LTF) (75915)	1	FR	
	312001	. FUSE (directional gyro phase A) (LTF) (75915)	1	FR	
	312001	. FUSE (directional gyro phase C) (LTF) (75915)	1	FR	
	209-51005	PANEL ASSEMBLY, Pilots instrument complete (see figure 315 for complete breakdown)	1		
	209-510108	PANEL ASSEMBLY, Pilots instrument complete (see figure 318 for complete breakdown)	1		
-4	MS28027-1	. INDICATOR (radio magnetic course) (GFP)	1		
-5	ID249B/ARN	. INDICATOR (course) (GFP)	1		
-6	15716-1-B	CONTROLLER, Compass (ECP) (19315) (supersedes 15716-1-A (ECP) (19315) for future procurement) (for breakdown of 15716-1-A see Technical Manual NA 05-15-599)	1	FL	
-7	16010-1-B	COUPLER, Compass (ECP) (19315) (supersedes 16010-1-A (ECP) (19315) (supersedes 16010-1-A (ECP) (19315) for future procurement) (for breakdown see Technical Manual NA 05-15-601)	1		
	ATTACHING PARTS				
	AN520-10R10	SCREW	4		
	2W18-10L	WASHER, Flat (NA) (89372)	4		
	---*---				
-8	17210-1-A	TRANSMITTER, Directional gyro (ECP) (19315) (for breakdown see Technical Manual NA 05-15-595)	1		
	ATTACHING PARTS				
	AN515-8R10	SCREW	4		
	AN935-8L	WASHER	4		
	2W18-8L	WASHER, Flat (NA) (89372)	4		
	---*---				
-9	209-51035	SUPPORT ASSEMBLY, Fuselage station 122 to station 129 compass gyro	1		
-10	7001-K	. MOUNT (RAI) (51116)	4		
	AN515-8R10	. SCREW (mount attaching)	16		

POLAR PATH COMPASS

FIGURE & INDEX NO.	PART NUMBER	1 2 3 4 5 6 7 NOMENCLATURE	UNITS PER ASSY.	USABLE ON CODE	S/C NO.
270 -11	AN515-8R10	SCREW	2		
-12	2W18-8M	WASHER, Flat (NA) (89372)	2		
-13	A8938-632-24A	SPEED NUT (TIN) (78553)	4		
-14	AN515-6R12	SCREW	4		
-15	ID251/ARN-14	INDICATOR, Azimuth (GFP) (use with AN/ARN-14E) (for breakdown see Technical Manual AN 16-35ID251-4)	1		151
	ID307/ARN-21	INDICATOR, Azimuth (GFP) (use with AN/ARN-21) (for breakdown see Technical Manual NA 16-35ID307-502)	1		
	209-51145	SUPPORT ASSEMBLY, Radio bearing indicator	1		
-16	209-51143	. BRACKET ASSEMBLY, Radiobearing indicator	1		
-17	194-51144	. SUPPORT ASSEMBLY, Radio bearing indicator	1		
-18	809-2	. . SHOCK ABSORBER (RAI) (51116)	4		
-19	AN515-8R22	. SCREW	4		
-20	2W18-8	. WASHER, Flat (NA) (89372)	4		
-21	AN749-1-3	JUMPER	1		
-22	15018-1-A	TRANSMITTER, Remote compass (ECP) (19315)	1		
	7S14CN632-8A	SCREW, Round head corrosion-resistant (NA) (89372)	3		
	2W18-6	WASHER, Flat (NA) (89372)	3		

NOTE: The above information has been compiled from 209-54002, Page 94 (H change)

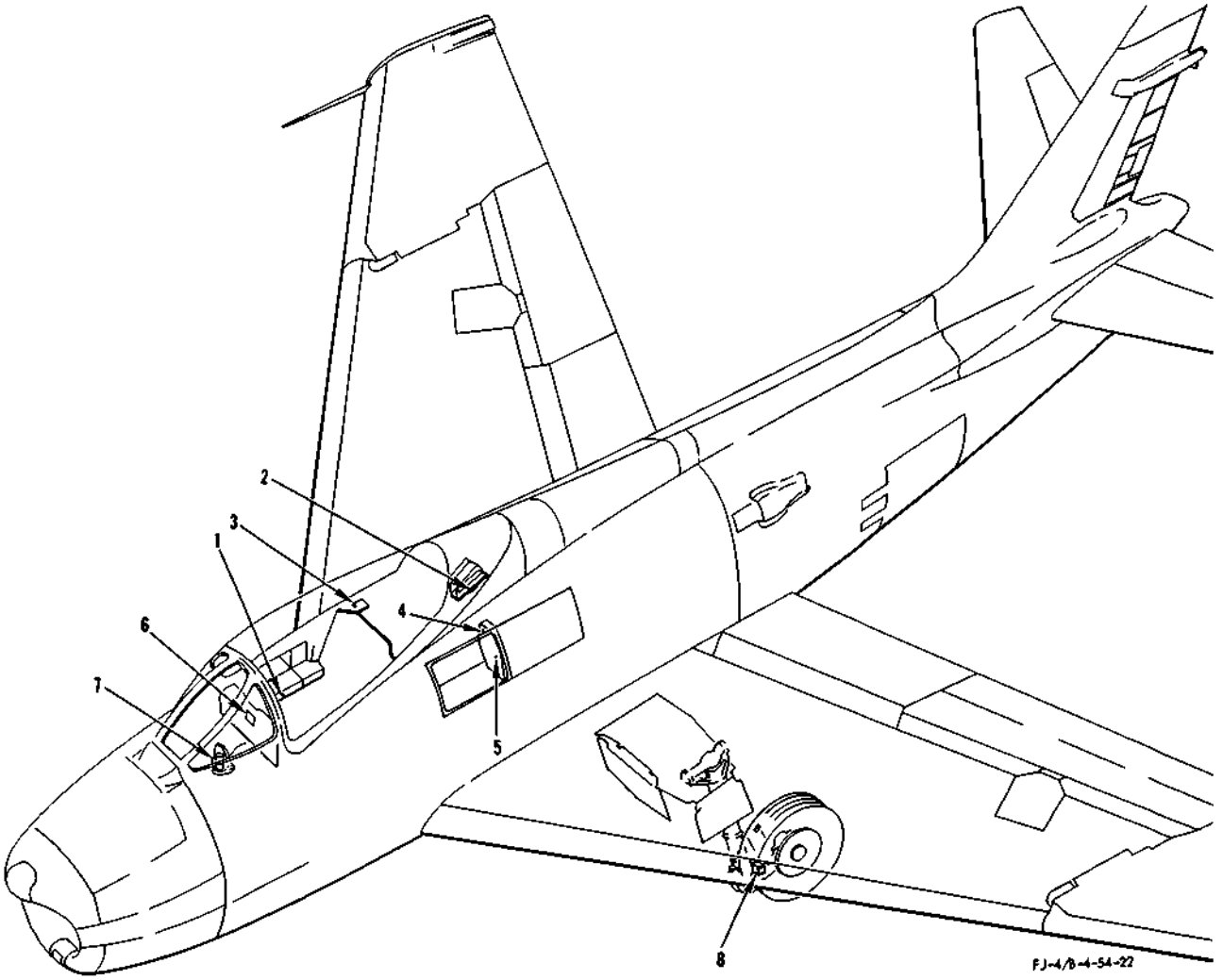

FIGURE 277 - STALL WARNING

FIGURE & INDEX NO.	PART NUMBER	1 2 3 4 5 6 7 NOMENCLATURE	UNITS PER ASSY.	USABLE ON CODE	S/C NO.
277	209-54026	CONSOLE ASSEMBLY, RH forward (see figures 305 and 306 for complete breakdown)	1		
-1	90	. CIRCUIT BREAKER (warning light test and rudder pedal shaker) (MEH) (76374)	1	ET	
	MS25017-5	. CIRCUIT BREAKER (warning light test and rudder pedal shaker)	1	FR	
	209-54101	PANEL ASSEMBLY, Canopy deck relay complete (see figure 299 for complete breakdown)	1		
-2	9220-PM	. RELAY (ground safety No. 1) (LR) (35344)	1		
	209-54106	PANEL ASSEMBLY, Electrical test switch complete (see figure 299 for complete breakdown)	1		
-3	AN3027-7	. SWITCH (rudder pedal shaker test and approach light hook by-pass)	1		
	209-54170	PANEL ASSEMBLY, Circuit breaker station 156 LH side complete (see figure 303 for complete breakdown)	1		
-4	90	. CIRCUIT BREAKER (ground safety) (MEH) (76374)	1	ET	
	209-540110	PANEL ASSEMBLY, Circuit breaker station 156 LH side complete (see figure 304 for complete breakdown)	1		
	MS25017-5	. CIRCUIT BREAKER (ground safety)	1	HJ	
-5	MS25017-5	. CIRCUIT BREAKER (ground safety and overvoltage)	1	FL	
	209-51005	PANEL ASSEMBLY, Pilots instrument complete (see figure 315 for complete breakdown)	1		
	209-510108	PANEL ASSEMBLY, Pilots instrument complete (see figure 318 for complete breakdown)	1		
-6	SLZ9036	. INDICATOR (angle of attack) (SLZ) (78423) (supersedes SLZ2167 (SLZ) (78423) for future procurement) (for breakdown of SLZ2167 see Technical Manual NA 05-20NB-513) (for breakdown of SLZ9036 see Technical Manual NA 05-20NB-514)	1		
-7	35A506	MOTOR (rudder pedal shaker) (GLI) (25140) (see Surface and Secondary Controls)	1		
-8		* MAIN LANDING GEAR GROUND SAFETY SWITCH ASSEMBLY LINKAGE AND ATTACHING PARTS			

NOTE: * See Landing Gear Sequencing System
The above information has been compiled from 209-54002, Page 96 (C change)

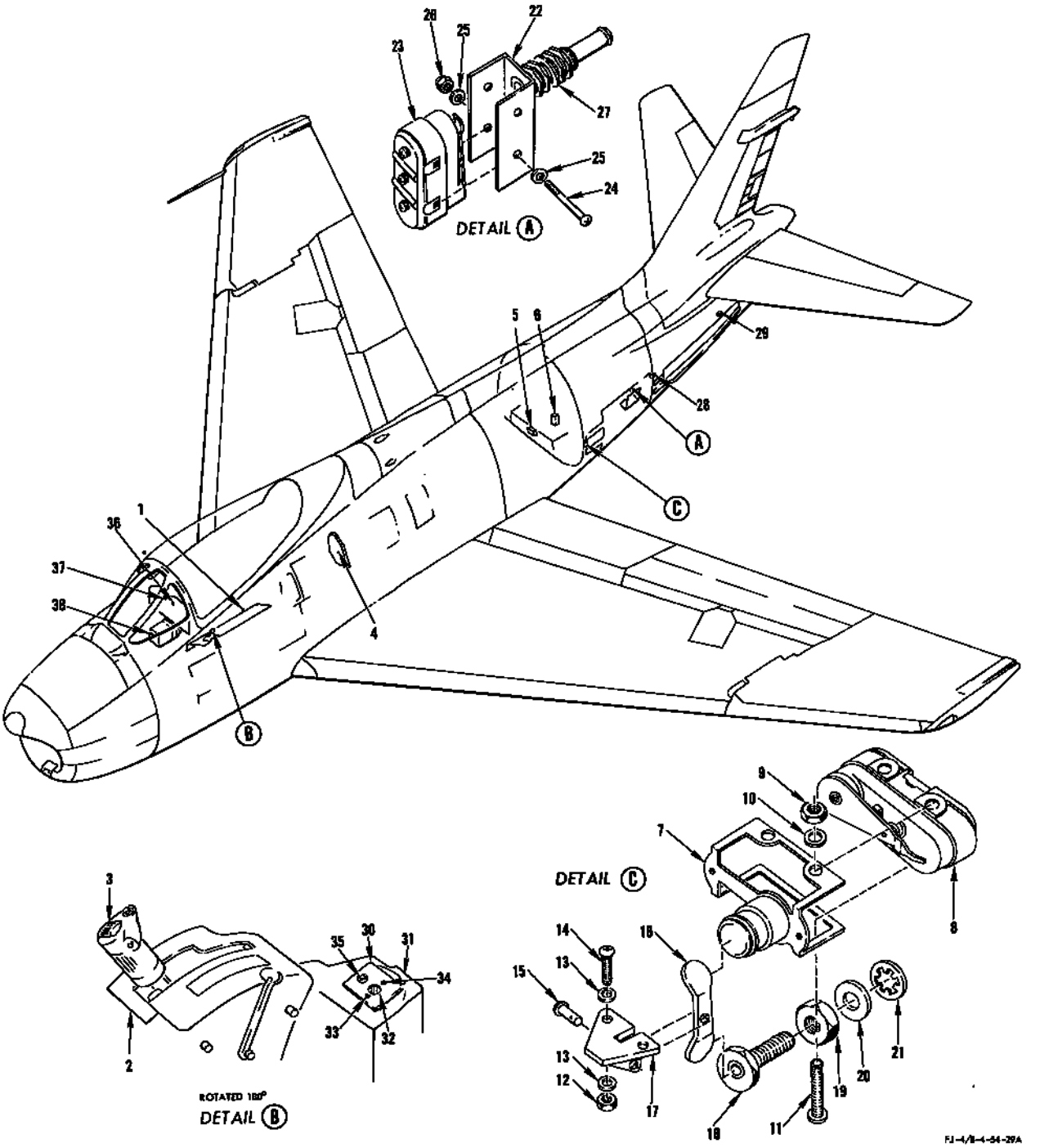

FIGURE 278 - SPEED BRAKE

FIGURE & INDEX NO.	PART NUMBER	1 2 3 4 5 6 7 NOMENCLATURE	UNITS PER ASSY.	USABLE ON CODE	S/C NO.
278	209-54115	CONSOLE ASSEMBLY, LH forward (see figure 300 for complete breakdown---	1		
-1	AN3161P5	. CIRCUIT BREAKER (speed brake)----------	1	DM	
	AN3161P5	. CIRCUIT BREAKER (speed brake and compressor control)----------	1	AD	
	AN3161P5	. CIRCUIT BREAKER (speed brake and oxygen indicator)----------	1	BS	
-2	50032	QUADRANT ASSEMBLY, Engine power control (RHW) (80477) (for breakdown - see Technical Manual NA 03-40EA-506)	1		

SPEED BRAKE

FIGURE & INDEX NO.	PART NUMBER	1 2 3 4 5 6 7 NOMENCLATURE	UNITS PER ASSY.	USABLE ON CODE	S/C NO.
278-3	AN3021-1	. SWITCH (speed brake)	1	LE	
	AN3021-5	. SWITCH (speed brake)	1	KY	
	209-54170	PANEL ASSEMBLY, Circuit breaker station 156 LH side complete (see figure 303 for complete breakdown)	1		
	209-540110	PANEL ASSEMBLY, Circuit breaker station 156 LH side complete (see figure 304 for complete breakdown)	1		
-4	90	. CIRCUIT BREAKER (speed brake indicator and anti-ice warning) (MEH) (76374)	1	ET	
	MS25017-5	. CIRCUIT BREAKER (speed brake indicator and anti-ice warning)	1	FR	
-5	11070	VALVE (speed brake selector) (MVEM) (93724) (interchangeable with 12000 (BTP) (82106)) (see Hydraulic System) (for breakdown see Technical Manual NA 03-30EX-504)	1		
-6	25036	VALVE (aft speed brake retract (AP) (00502) (see Hydraulic System)) for breakdown see Technical Manual NA 03-30CL-518)	1	FR	
-7	MDH2721	ACTUATOR (MCS) (91929)	1		
-8	1HS6	SWITCH, Basic (forward speed brake open) (MCS) (91929)	1		
	ATTACHING PARTS				
-9	AN363-632	NUT	2		
-10	2W18-6L	WASHER, Flat (NA) (89372)	2		
-11	AN507-632R19	SCREW	2		
	---*---				
	209-54429	BRACKET ASSEMBLY, Electric speed brake position indicator switch actuator	1		
	ATTACHING PARTS				
-12	AN363-632	NUT	2		
-13	2W18-6L	WASHER, Flat (NA) (89372)	4		
-14	AN515-6R8	SCREW	2		
	---*---				
-15	AN392-13	. PIN	1		
-16	209-54428	. ARM, Electric speed brake position indicator switch actuating	1		
-17	209-54427	. BRACKET, Electric speed brake position indicator switch cam support	1		
-18	5B21-428-17	BOLT, Adjustable stop (NA) (89372)	1		
-19	AN316-4	NUT	1		
-20	2W18-416L	WASHER, Flat (NA) (89372)	1		
-21	AN936A416	WASHER	1		
-22	AN3167-1	ACTUATOR	1		
-23	1HS6	SWITCH, Basic (forward speed brake closed) (MCS) (91929)	1		
	ATTACHING PARTS				
-24	AN515-6R18	SCREW	2		
-25	2W18-6L	WASHER, Flat (NA) (89372)	4		
-26	AN363-632	NUT	2		
-27	2W2SP31-20-64	WASHER, Thrust (NA) (89372)	1	FR	
	---*---				
-28	1HS11	SWITCH (aft speed brake open) (MCS) (91929)	1	FR	
	ATTACHING PARTS				
	AN515-6R18	SCREW	2	FR	
	2W18-6	WASHER, Flat (NA) (89372)	4	FR	
	AN365-632	NUT	2	FR	
	---*---				
-29	BZ-7RQ1T	SWITCH (aft speed brake closed) (MCS) (91929)	1	FR	
	ATTACHING PARTS				
	AN515-6R18	SCREW	2	FR	
	2W18-6	WASHER, Flat (NA) (89372)	4	FR	
	AN365-632	NUT	2	FR	
	---*---				
	181-51129-10	PANEL ASSEMBLY, Pilots speed brake indicator complete	1	U	
	181-51129-20	PANEL ASSEMBLY, Pilots speed brake indicator complete	1	GA	
-30	181-51020	. REFRACTOR, Speed brake position indicator complete	1	ET	
-31	181-51128	. PANEL ASSEMBLY, Pilots speed brake indicator complete	1	ET	
-32	SP103-10	. INDICATOR (speed brake) (KWC) (75312) (interchangeable with 8DJ51GBF-4 (GEMI) (98863))	1	U	
	8DJ51GBF-4	. INDICATOR (speed brake) (GEMI) (98863) (interchangeable with SP 103-10 (KWC) (75312))	1	GA	
	ATTACHING PARTS				
-33	AN507B6R4	. SCREW	1	ET	
-34	AN507UB6R4	. SCREW	1	ET	
	---*---				
-35	MS25010-4	. LIGHT ASSEMBLY	1	ET	
	AN3140-327	. LAMP	1	ET	
	209-510108	PANEL ASSEMBLY, Pilots instrument complete (see figure 318 for complete breakdown)	1		
-36	8DJ51GBF-4	. INDICATOR (forward speed brake) (GEMI) (98863)	1	FR	
-37	8DJ51GBF-4	. INDICATOR (aft speed brake) (GEMI) (98863)	1	FR	
	209-54226	SHIELD ASSEMBLY, Center electrical pedestal complete (see figure 295 for complete breakdown)	1		
-38	AN3310-1	. RELAY (landing gear switch down) (superseded by AN3310-2 for future procurement) (not to be used for replacement on any aircraft)	1	QX	
	AN3310-2	. RELAY (landing gear switch down) (supersedes AN3310-1 for future procurement)	1	QY	

NOTE: The above information has been compiled from 209-54002, Page 53 (K change)

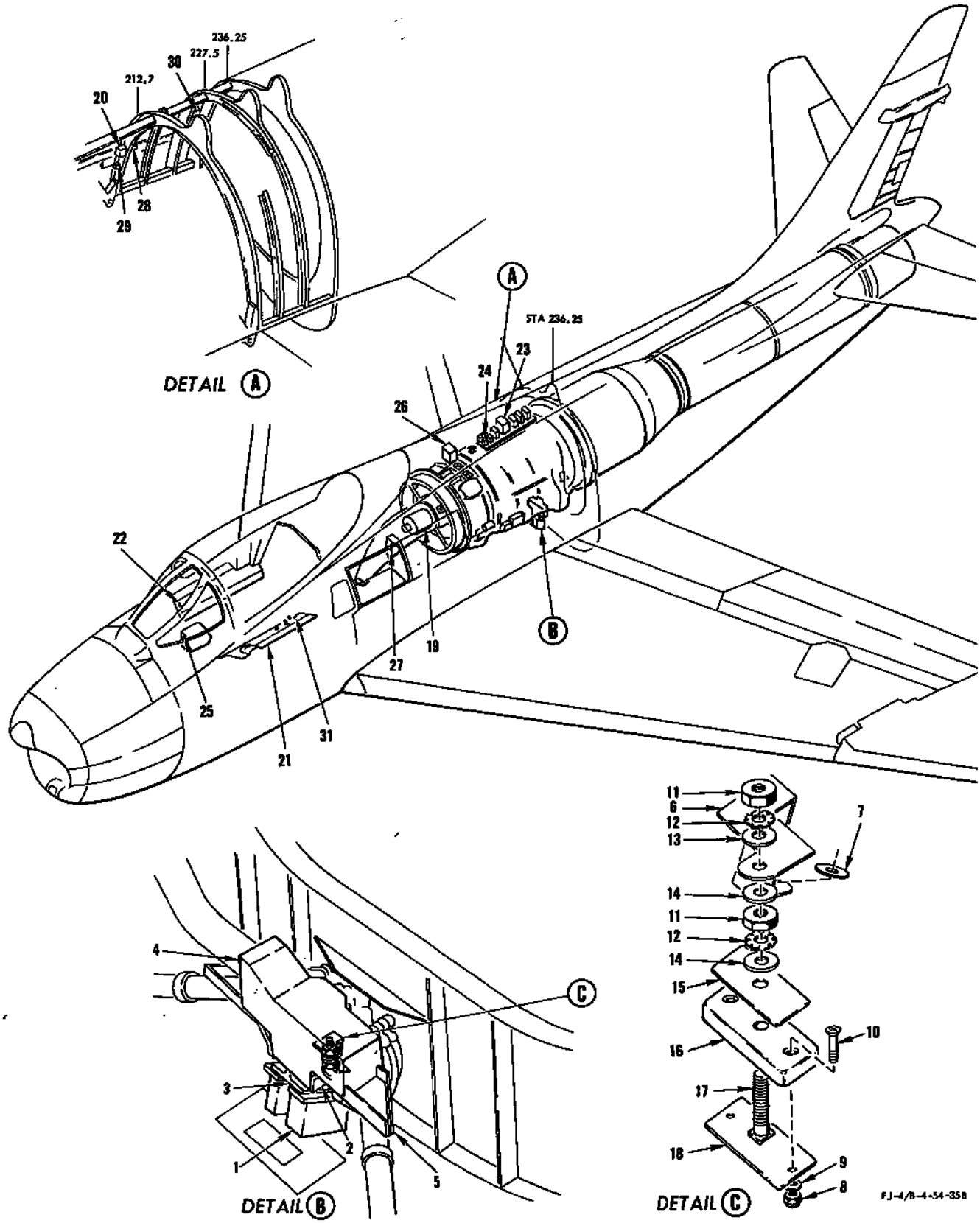

FIGURE 279 - STARTING AND DC GENERATING AND EMERGENCY IGNITION SYSTEMS

STARTING AND DC GENERATING AND EMERGENCY IGNITION SYSTEMS

FIGURE & INDEX NO.	PART NUMBER	1 2 3 4 5 6 7 NOMENCLATURE	UNITS PER ASSY.	USABLE ON CODE	S/C NO.
279		STARTING AND DC GENERATING SYSTEM			374
-1	209-54418	. RECEPTACLE, Electric jet starting power (make from MS25018-1 by removing two AN936B616B washers and installing two SB23-616 (Shur-Lok) (97393) nuts, two AN935B616 washers and two AN961-616 washers)	1		
-2	209-54095	. COVER ASSEMBLY, Electric external power	1		
-3	209-54626	. SUPPORT, External power station 230.688 lower	1		
	ATTACHING PARTS				
	AN520-10R22	. SCREW	2	ET	
	AN520-10R12	. SCREW	2	ET	
	AN507-10-22	. SCREW	2	FR	
	AN507-10-18	. SCREW	1	FR	
	2W18-10M	. WASHER, Flat (NA) (89372)	12		
	AN365-1032	. NUT	6		
	---*---				
-4	209-54092	. COVER, Electric external power	1		
-5	209-54627	. CHANNEL ASSEMBLY, External power station 230 lower	1		
	ATTACHING PARTS				
	AN520-10R8	. SCREW	4	ET	
	AN520-10R12	. SCREW	4	FR	
	2W18-10M	. WASHER, Flat (NA) (89372)	8		
	AN365-1032	. NUT	4		
	---*---				
-6	209-54097	. BUS BAR ASSEMBLY, External power plug to terminal block LH	1		
-7	2W1AL24-28-125	. WASHER, Plain (NA) (89372)	1		
	209-54194	. TERMINAL BLOCK ASSEMBLY, Electrical single post	1		
	ATTACHING PARTS				
-8	AN365-1032	. NUT	2	ET	
	AN365-832	. NUT	2	FR	
-9	2W18-10M	. WASHER, Flat (NA) (89372)	2	ET	
	2W18-8	. WASHER, Flat (NA) (89372)	2	FR	
-10	AN507-1032R16	. SCREW	2	ET	
	AN507-832R18	. SCREW	2	FR	
	---*---				
-11	AN341-616	. . NUT	2		
-12	AN936A616B	. . WASHER	2		
-13	2W1AL25-28-063	. . WASHER, Plain (NA) (89372)	1		
-14	2W1AL25-10-032	. . WASHER, Plain (NA) (89372)	2		
-15	209-54190	. . STRIP, Electric terminal block mounting nut insulating	1		
-16	209-54193	. . TERMINAL BLOCK, Electric single post	1		
-17	AN3432-624-32	. . STUD	1		
-18	209-54192-3	. STRIP, Electric terminal block insulating	1		
-19	30E13-6D	. STARTER GENERATOR (GFP) (supersedes 30E13-6C (GFP) and 30E13-6B (GFP) for future procurement) (superseded by 30E13-6QF (GFP) for future procurement) (see Power Plant) (for breakdown of 30E13-6B see Technical Manual NA 03-5AA-550)	1	QW	
	30E13-6QF	. STARTER GENERATOR (GFP) (supersedes 30E13-6D (GFP) for future procurement) (see Power Plant)	1	QQ	
-20	A-711JB	. RELAY (starter control) (HEM) (74063)	1		
	ATTACHING PARTS				
	AN520-10R8	. SCREW	4		
	2W18-10M	. WASHER, Flat (NA) (89372)	4		
	---*---				
	209-54201	. COVER, Electric starter control (RH engine bay)	1		
	ATTACHING PARTS				
	AN520-10R10	. SCREW	4		
	2W18-10M	. WASHER, Flat (NA) (89372)	4		
	2W1AL24-28-125	. WASHER, Plain (NA) (89372)	2	FR	
	---*---				
	209-54200	. MOUNTING BRACKET, Starting relay (RH engine bay)	1		
	ATTACHING PARTS				
	AN3-5A	. BOLT	4		
	2W18-10M	. WASHER, Flat (NA) (89372)	4		
	---*---				
-21	209-54115	. CONSOLE ASSEMBLY, LH forward (see figures 300 and 301 for complete breakdown)	1		
	90	. . CIRCUIT BREAKER (starter control and fuel shutoff) (MEH) (76374)	1	ET	
	MS25017-5	. . CIRCUIT BREAKER (starter and fuel transfer)	1	FR	
	AN3227-3	. . SWITCH (engine master)	1		
	2AT5	. . SWITCH (engine starter) (MCS) (91929)	1		
-22	209-54026	. CONSOLE ASSEMBLY, RH forward (see figures 305 and 306 for complete breakdown)	1		
	B905K780	. . SWITCH (battery and generator) (CUT) (15605)	1		
	AN3027-11	. . SWITCH (generator reset)	1	FL	
	209-54138	. PANEL ASSEMBLY, Electric power distribution relay complete (see figures 297 and 298 for complete breakdown)	1		
-23	AN3025-2	. . CUTOUT (reverse current 28 volt dc)	1		
-24	AN3312-1	. . RELAY (starter shunt field control)	1		
	209-54226	. SHIELD ASSEMBLY, Center electric pedestal complete (see figure 295 for complete breakdown)	1		
-25	AN3310-1	. . RELAY (bus control) (superseded by AN3310-2 for future procurement) (not to be used for replacement on any aircraft)	1	QX	
	AN3310-2	. . RELAY (bus control) (supersedes AN3310-1 for future procurement)	1	QY	

STARTING AND DC GENERATING AND EMERGENCY IGNITION SYSTEMS

FIGURE & INDEX NO.	PART NUMBER	1 2 3 4 5 6 7 NOMENCLATURE	UNITS PER ASSY.	USABLE ON CODE	S/C NO.
279-26	1588-2-C	. VOLTAGE REGULATOR (BARB) (83298) (interchangeable with 1588-2-D (BARB) (83298) (for breakdown see Technical Manual NA 03-30CE-538)	1	QY	
	ATTACHING PARTS				
	AN3-3A	. BOLT	4		
	2W18-10M	. WASHER, Flat (NA) (89372)	4		
	---*---				
	209-540110	. PANEL ASSEMBLY, Circuit breaker station 156 LH side complete (see figure 304 for complete breakdown)	1		
-27	MS25017-5	. . CIRCUIT BREAKER (ground safety and overvoltage)	1	FL	
	209-54278	. BRACKET, Anti-cycling relay mounting station 212.7 assembly of	1	FL	
	S1-2399Z-N119-3	. COVER (LR) (35344) (superseded by S1-2399-1-Z-N119-3 (LR) (35344))	1		
	S1-2399-1-Z-N119-3	. COVER (LR) (35344) (supersedes S1-2399Z-N119-3 (LR) (35344) for future procurement)	1		
-28	AN3311-2	. RELAY (anti-cycling)	1	FL	
	ATTACHING PARTS				
	AN515-8R10	. SCREW	2	FL	
	2W18-8L	. WASHER, Flat (NA) (89372)	2	FL	
	---*---				
	209-54277	. BRACKET, Overvoltage relay mounting assembly of	1	FL	
	ATTACHING PARTS				
	AN515-8R6	. SCREW	3	FL	
	2W18-8L	. WASHER, Flat (NA) (89372)	6	FL	
	AN365-832	. NUT	3	FL	
	---*---				
-29	TD-812A	. RELAY (overvoltage) (HEM) (74063) (interchangeable with TD-800 (HEM) (74063), TD-805H (HEM) (74063), TD-805H3 (HEM) (74063) and TD-812 (HEM) (74063))	1	FL	
	ATTACHING PARTS				
	AN520-10R10	. SCREW	2	FL	
	2W18-10M	. WASHER, Flat (NA) (89372)	2	FL	
	---*---				
-30	PR9502AC	. RELAY (generator field control) (PHC) (77221)	1	FL	
	ATTACHING PARTS				
	AN3-5A	. BOLT	2	FL	
	AN520-10R10	. SCREW	2	FL	
	2W18-10M	. WASHER, Flat (NA) (89372)	4	FL	
	AN365-1032	. NUT	2	FL	
	---*---				
		EMERGENCY IGNITION SYSTEM			
	209-54115	. CONSOLE ASSEMBLY, LH forward (see figures 300 and 301 for complete breakdown)	1		
-31	AN3021-2	. . SWITCH (emergency ignition)	1		

NOTE: The above information has been compiled from 209-54002, Page 54 (K change) and Page 45 (E change)

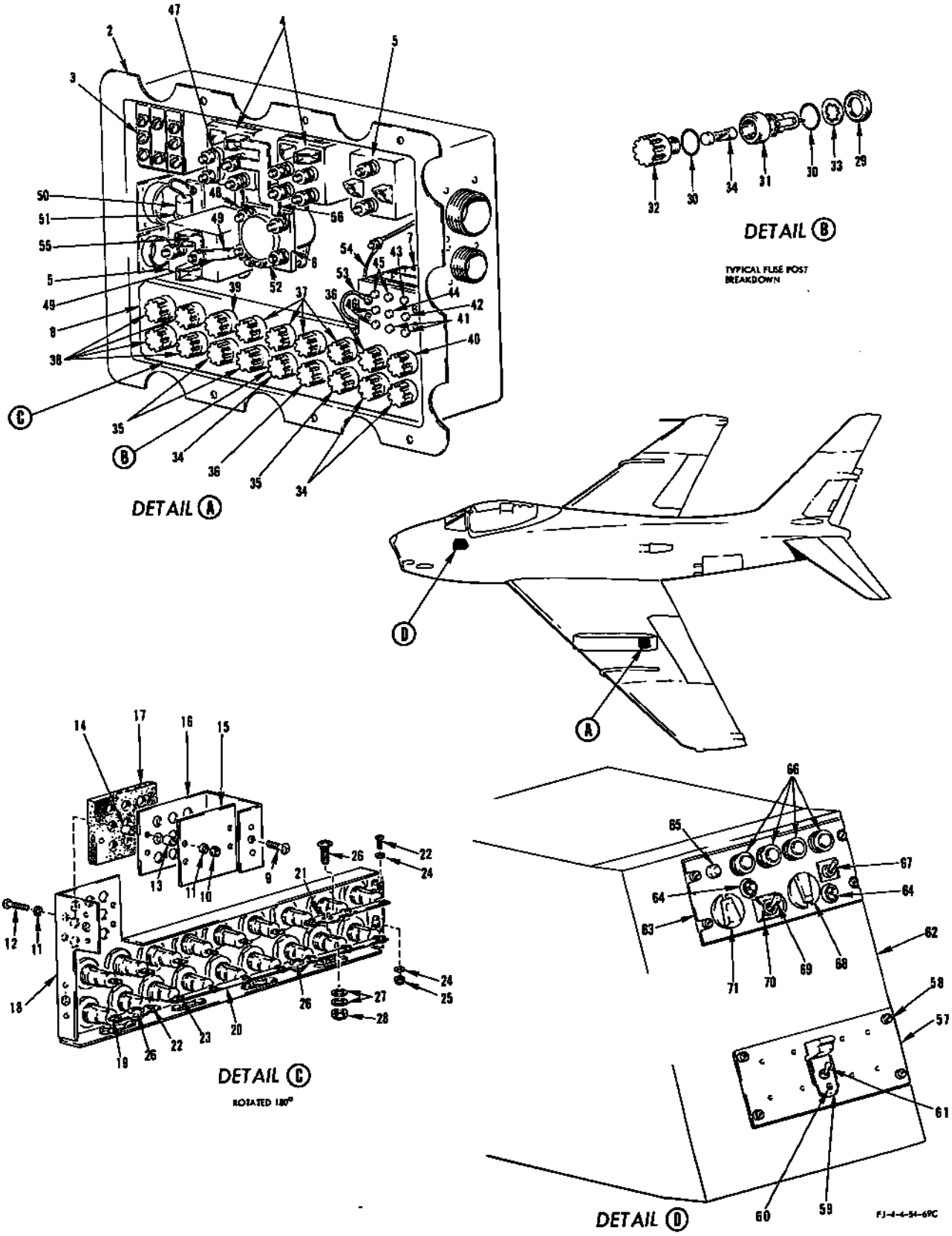

FIGURE 284 - T-208A SYSTEM PACKAGE - APPLICABLE TO AIRCRAFT CODED (ET)

T-208A SYSTEM PACKAGE - APPLICABLE TO AIRCRAFT CODED (ET)

FIGURE & INDEX NO.	PART NUMBER	1 2 3 4 5 6 7 NOMENCLATURE	UNITS PER ASSY.	USABLE ON CODE	S/C NO.
284-1	209-543103	BOX ASSEMBLY, Electric T-208A fuse and relay pylon LH side	1	ET	
-2	209-543102	. BOX, Electric T-208A fuse and relay pylon LH inboard	1	ET	
-3	AN3311-2	. RELAY	1	ET	
		ATTACHING PARTS			
	AN507-832R7	. SCREW	2	ET	
	2W18-8L	. WASHER, Flat (NA) (89372)	2	ET	
	AN365-832	. NUT	2	ET	
		---*---			
-4	650-4063	. RELAY (COE) (71688)	2	ET	
		ATTACHING PARTS			
	AN507-832R7	. SCREW	4	ET	
	2W18-8L	. WASHER, Flat (NA) (89372)	4	ET	
	AN365-832	. NUT	4	ET	
		---*---			
-5	650-4269	. RELAY (COE) (71688)	2	ET	
		ATTACHING PARTS			
	AN507-832R7	. SCREW	4	ET	
	2W18-8L	. WASHER, Flat (NA) (89372)	4	ET	
	AN365-832	. NUT	4	ET	
		---*---			
284-6	AN3352-1	. RELAY	1	ET	
		ATT ACHING PARTS			
	AN507-832R7	. SCREW	2	ET	
	2W18-8L	. WASHER, Flat (NA) (89372)	2	ET	
	AN365-832	. NUT	2	ET	
		---*---			
-7	650-1710	. RELAY (COE) (71688)	1	ET	
		ATTACHING PARTS			
	AN515-4R4	. SCREW	2	ET	
	2W18-4L	. WASHER, Flat (NA) (89372)	2	ET	
	AN936A4	. WASHER	2	ET	
		---*---			
-8	209-54392-101	. BRACKET ASSEMBLY, Electric fuse and spare fuse LH pylon inboard	1	ET	
		ATTACHING PARTS			
-9	AN507-832R7	. SCREW	1	ET	
	AN515-8R8	. SCREW	8	ET	
	2W18-8L	. WASHER, Flat (NA) (89372)	8	ET	
		---*---			
-10	AN365-632	. . NUT	4	ET	
-11	2W18-6L	. . WASHER, Flat (NA) (89372)	8	ET	
-12	AN515-6R18	. . SCREW	4	ET	
-13	NAS43-1-24	. . SPACER	4	ET	
-14	NAS43-1-18	. . SPACER	4	ET	
-15	209-54392-7	. . RETAINER, Electric fuse and spare fuse LH pylon inboard bracket assembly	1	ET	
-16	209-54392-9	. . PLATE, Electric fuse and spare fuse LH pylon inboard bracket assembly	1	ET	
-17	209-54392-5	. . PAD, Electric fuse and spare fuse LH pylon inboard bracket assembly	1	ET	
-18	209-54392-11	. . BRACKET, Electric fuse and spare fuse LH pylon inboard bracket assembly	1	ET	
-19	209-543108-5	. BAR, Electrical bus	1	ET	
-20	209-543109	. BAR, Electrical bus	1	ET	
-21	209-543108-3	. BAR, Electrical bus	1	ET	
		ATTACHING PARTS			
-22	AN515-4R7	. SCREW	5	ET	
-23	AN515-4R5	. SCREW	7	ET	
-24	2W1AL8-10-32	. WASHER, Plain (NA) (89372)	24	ET	
-25	AN365-440	. NUT	12	ET	
		---*---			
-26	AN520-10R8	. SCREW	3	ET	
-27	2W1AL14-14-16	. WASHER, Plain (NA) (89372)	6	ET	
-28	AN365-1032	. NUT	3	ET	
	342006	. 3AG PRESSURIZED FUSE POST (LTF) (75915)	18	ET	
-29	903-26	. . NUT (LTF) (75915)	1	ET	
-30	AN6227-12	. . PACKING	2	ET	
-31	442006-SA1	. . BODY, Subassembly (LTF) (75915)	1	ET	
-32	342006-SA2	. . KNOB, Subassembly (LTF) (75915)	1	ET	
-33	1128-06	. LOCK WASHER (SH) (78189)	18	ET	
-34	MDF-20	. FUSE (BUS) (71400)	3	ET	
-35	MDF-15	. FUSE (BUS) (71400)	3	ET	
-36	MDF-5	. FUSE (BUS) (71400)	2	ET	
-37	MDF-3	. FUSE (BUS) (71400)	4	ET	
-38	MDF-25	. FUSE (BUS) (71400)	4	ET	
-39	MDF-35	. FUSE (BUS) (71400)	1	ET	
-40	MDF-5	. FUSE (spare) (BUS) (71400)	1	ET	
-41	MDF-3	. FUSE (spare) (BUS) (71400)	2	ET	
-42	MDF-5	. FUSE (spare) (BUS) (71400)	1	ET	
-43	MDF-35	. FUSE (spare) (BUS) (71400)	1	ET	
-44	MDF-20	. FUSE (spare) (BUS) (71400)	1	ET	
-45	MDF-25	. FUSE (spare) (BUS) (71400)	2	ET	
-46	MDF-15	. FUSE (spare) (BUS) (71400)	2	ET	

T-208A SYSTEM PACKAGE - APPLICABLE TO AIRCRAFT CODED (ET)

FIGURE & INDEX NO.	PART NUMBER	1 2 3 4 5 6 7 NOMENCLATURE	UNITS PER ASSY.	USABLE ON CODE	S/C NO.
284-1	209-543103	BOX ASSEMBLY, Electric T-208A fuse and relay pylon LH side	1	ET	
-2	209-543102	. BOX, Electric T-208A fuse and relay pylon LH inboard	1	ET	
-3	AN3311-2	. RELAY	1	ET	
	ATTACHING PARTS				
	AN507-832R7	. SCREW	2	ET	
	2W18-8L	. WASHER, Flat (NA) (89372)	2	ET	
	AN365-832	. NUT	2	ET	
	---*---				
-4	650-4063	. RELAY (COE) (71688)	2	ET	
	ATTACHING PARTS				
	AN507-832R7	. SCREW	4	ET	
	2W18-8L	. WASHER, Flat (NA) (89372)	4	ET	
	AN365-832	. NUT	4	ET	
	---*---				
-5	650-4269	. RELAY (COE) (71688)	2	ET	
	ATTACHING PARTS				
	AN507-832R7	. SCREW	4	ET	
	2W18-8L	. WASHER, Flat (NA) (89372)	4	ET	
	AN365-832	. NUT	4	ET	
	---*---				
-6	AN3352-1	. RELAY	1	ET	
	ATT ACHING PARTS				
	AN507-832R7	. SCREW	2	ET	
	2W18-8L	. WASHER, Flat (NA) (89372)	2	ET	
	AN365-832	. NUT	2	ET	
	---*---				
-7	650-1710	. RELAY (COE) (71688)	1	ET	
	ATTACHING PARTS				
	AN515-4R4	. SCREW	2	ET	
	2W18-4L	. WASHER, Flat (NA) (89372)	2	ET	
	AN936A4	. WASHER	2	ET	
	---*---				
-8	209-54392-101	. BRACKET ASSEMBLY, Electric fuse and spare fuse LH pylon inboard	1	ET	
	ATTACHING PARTS				
-9	AN507-832R7	. SCREW	1	ET	
	AN515-8R8	. SCREW	8	ET	
	2W18-8L	. WASHER, Flat (NA) (89372)	8	ET	
	---*---				
-10	AN365-632	. . NUT	4	ET	
-11	2W18-6L	. . WASHER, Flat (NA) (89372)	8	ET	
-12	AN515-6R18	. . SCREW	4	ET	
-13	NAS43-1-24	. . SPACER	4	ET	
-14	NAS43-1-18	. . SPACER	4	ET	
-15	209-54392-7	. . RETAINER, Electric fuse and spare fuse LH pylon inboard bracket assembly	1	ET	
-16	209-54392-9	. . PLATE, Electric fuse and spare fuse LH pylon inboard bracket assembly	1	ET	
-17	209-54392-5	. . PAD, Electric fuse and spare fuse LH pylon inboard bracket assembly	1	ET	
-18	209-54392-11	. . BRACKET, Electric fuse and spare fuse LH pylon inboard bracket assembly	1	ET	
-19	209-543108-5	. BAR, Electrical bus	1	ET	
-20	209-543109	. BAR, Electrical bus	1	ET	
-21	209-543108-3	. BAR, Electrical bus	1	ET	
	ATTACHING PARTS				
-22	AN515-4R7	. SCREW	5	ET	
-23	AN515-4R5	. SCREW	7	ET	
-24	2W1AL8-10-32	. WASHER, Plain (NA) (89372)	24	ET	
-25	AN365-440	. NUT	12	ET	
	---*---				
-26	AN520-10R8	. SCREW	3	ET	
-27	2W1AL14-14-16	. WASHER, Plain (NA) (89372)	6	ET	
-28	AN365-1032	. NUT	3	ET	
	342006	. 3AG PRESSURIZED FUSE POST (LTF) (75915)	18	ET	
-29	903-26	. . NUT (LTF) (75915)	1	ET	
-30	AN6227-12	. . PACKING	2	ET	
-31	442006-SA1	. . BODY, Subassembly (LTF) (75915)	1	ET	
-32	342006-SA2	. . KNOB, Subassembly (LTF) (75915)	1	ET	
-33	1128-06	. LOCK WASHER (SH) (78189)	18	ET	
-34	MDF-20	. FUSE (BUS) (71400)	3	ET	
-35	MDF-15	. FUSE (BUS) (71400)	3	ET	
-36	MDF-5	. FUSE (BUS) (71400)	2	ET	
-37	MDF-3	. FUSE (BUS) (71400)	4	ET	
-38	MDF-25	. FUSE (BUS) (71400)	4	ET	
-39	MDF-35	. FUSE (BUS) (71400)	1	ET	
-40	MDF-5	. FUSE (spare) (BUS) (71400)	1	ET	
-41	MDF-3	. FUSE (spare) (BUS) (71400)	2	ET	
-42	MDF-5	. FUSE (spare) (BUS) (71400)	1	ET	
-43	MDF-35	. FUSE (spare) (BUS) (71400)	1	ET	
-44	MDF-20	. FUSE (spare) (BUS) (71400)	1	ET	
-45	MDF-25	. FUSE (spare) (BUS) (71400)	2	ET	
-46	MDF-15	. FUSE (spare) (BUS) (71400)	2	ET	

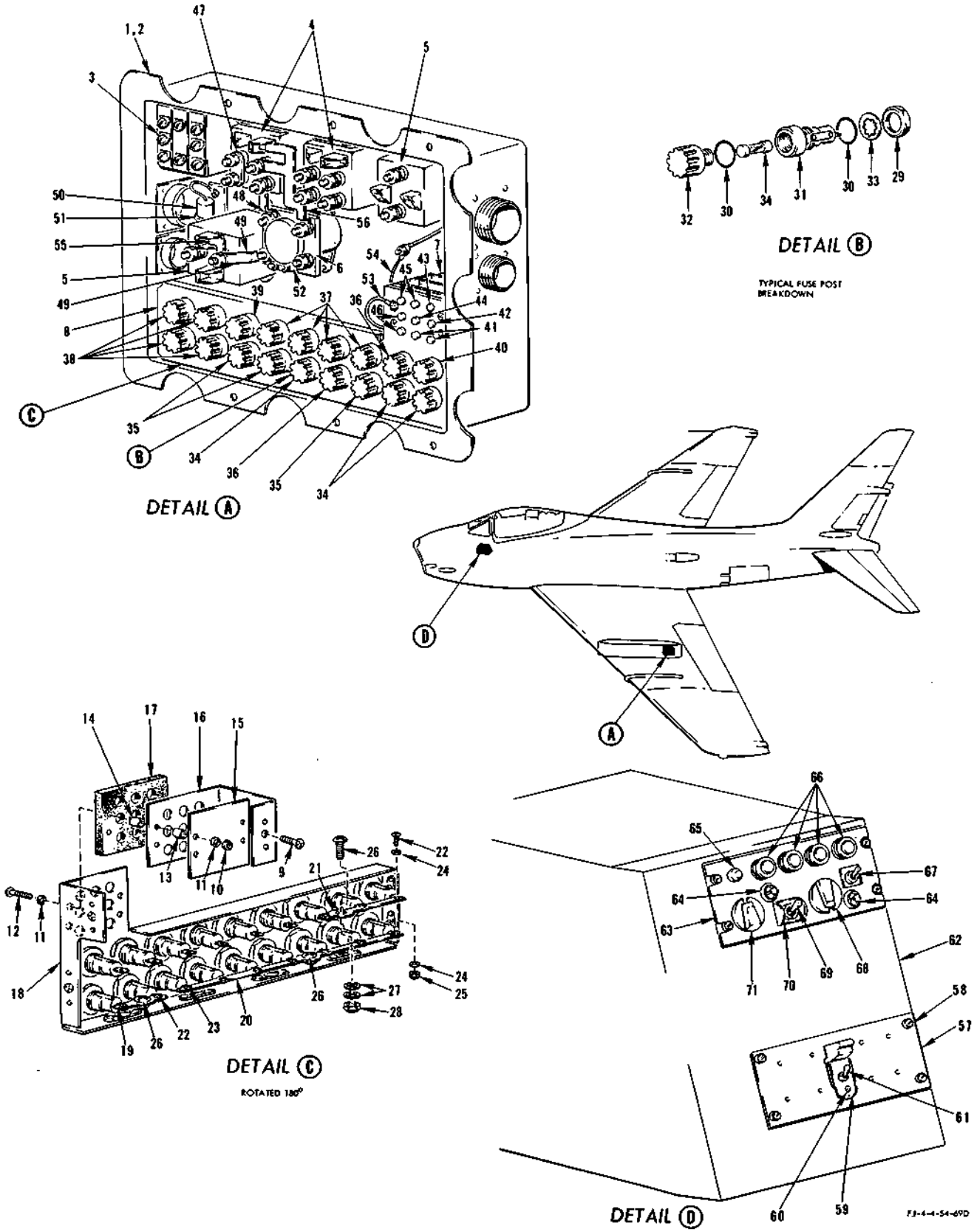

FIGURE 284 - T-208A SYSTEM PACKAGE - APPLICABLE TO AIRCRAFT CODED (ET)

T-208A SYSTEM PACKAGE - APPLICABLE TO AIRCRAFT CODED (ET)

FIGURE & INDEX NO.	PART NUMBER	1 2 3 4 5 6 7 NOMENCLATURE	UNITS PER ASSY.	USABLE ON CODE	S/C NO.
284-47	209-540146-3	. BAR, Electrical bus	1	ET	
-48	209-543104-21	. BAR, Electrical bus	1	ET	
-49	209-543104-11	. BAR, Electrical bus	1	ET	
-50	29F476	. CONDENSER (GE) (95412)	1	ET	
-51	MS21919WDG6	. CLAMP	1	ET	
	ATTACHING PARTS				
	AN507-1032R10	. SCREW	1	ET	
	2W18-10M	. WASHER, Flat (NA) (89372)	1	ET	
	AN365-1032	. NUT	1	ET	
	---*---				
-52	209-540146-5	. BAR, Electrical bus	1	ET	
-53	1J1-2-3-5	. JUMPER, Wire (NA) (89372)	1	ET	
-54	1J1-2-3-10	. JUMPER, Wire (NA) (89372)	1	ET	
-55	209-543105	. BAR, Electrical bus	1	ET	
-56	209-543107	. BAR, Electrical bus	1	ET	
-57	209-54274	PANEL ASSEMBLY, Station selector switch	1	ET	
	209-54275	. PANEL ASSEMBLY, Station selector switch	1	ET	
-58	PF3-1/2-38	. . STUD (DZ) (72794)	4	ET	
	PS3-1/2	. . SPRING (DZ) (72794)	4	ET	
	PC3-1/2	. . CUP (DZ) (72794)	4	ET	
-59	AN3333-1	. GUARD	1	ET	
-60	AN515-6R7	. SCREW	2	ET	
-61	AN3022-6	. SWITCH	1	ET	
-62	G7455A-1	BOX ASSEMBLY, Electric T-208A control (GMC) (72914) (for breakdown see Technical Manual NA16-45-650)	1	ET	
	D6083A-1	. BOX ASSEMBLY, Electric T-208A control (GMC) (72914)	1	ET	
-63	D8061A-1	. PLASTIC PANEL (GMC) (72914)	1	ET	
	D8062A-1	. PLATE, Switch mounting (GMC) (72914)	1	ET	
	D6085A-1	. PLATE, Wiring diagram (GMC) (72914)	1	ET	
	G8060A	. . WIRING DIAGRAM, Wires and terminals (GMC) (72914)	1	ET	
	D8067A-1	. SUPPORT BRACKET ASSEMBLY (GMC) (72914)	1	ET	
	A9173-1	. SUPPORT POST (GMC) (72914)	1	ET	
-64	A5885-327	. PANEL LIGHT (GMC) (72914)	2	ET	
-65	VM102B	. LIGHT ASSEMBLY (MARI) (87034)	1	ET	
-66	MS25041-2	. INDICATOR LIGHT (DLC) (96312)	4	ET	
	AN3140-327	. . LAMP, 28 volt	4	ET	
-67	A4-5/E4-2	. SWITCH (EABN) (97198)	1	ET	
	A9172-1	. COVER, Switch (GMC) (72914)	1	ET	
	A9169-1	. CAP, Switch (GMC) (72914)	1	ET	
-68	65838-F2X	. SWITCH (OAKA) (81716)	1	ET	
	A8069	. . KNOB, Switch (GMC) (72914)	1	ET	
-69	AN3021-7	. SWITCH (CUT) (15605)	1	ET	
-70	A9171-1	. GUARD, Switch (GMC) (72914)	1	ET	
-71	58648-F3X	. SWITCH (OAKA) (81716)	1	ET	
	A8069	. . KNOB, Switch (GMC) (72914)	1	ET	
	AN3102A-28-21P	. CONNECTOR (AMP) (02660)	1	ET	
	RC20AE473K	. RESISTOR	1	ET	
	RC20A104K	. RESISTOR	1	ET	

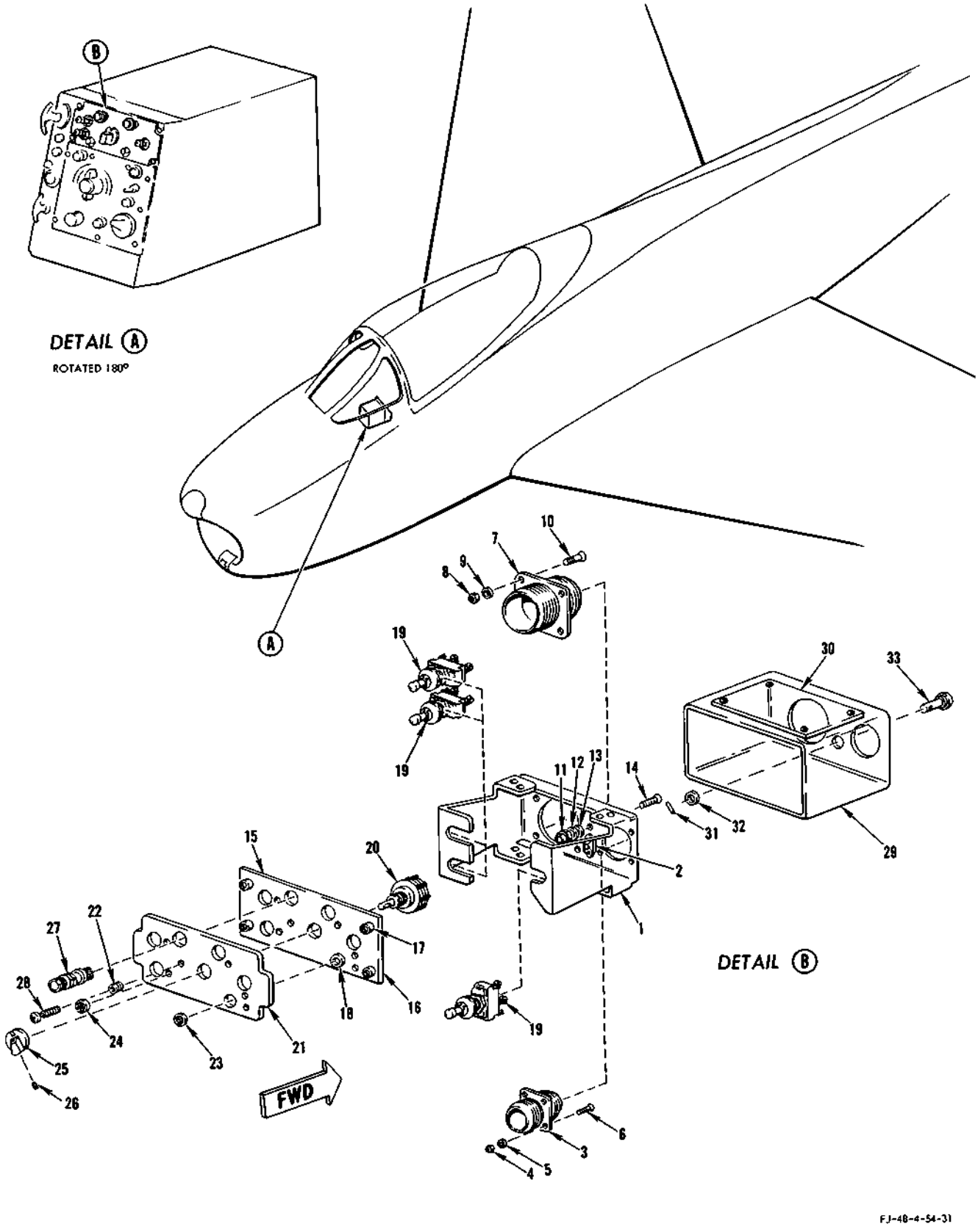

FIGURE 284A - SPRAY TANK PROVISION PACKAGE - APPLICABLE TO AIRCRAFT CODED (FR)

SPRAY TANK PROVISION PACKAGE - APPLICABLE TO AIRCRAFT CODED(FR)

FIGURE & INDEX NO.	PART NUMBER	1	2	3	4	5	6	7	NOMENCLATURE	UNITS PER ASSY.	USABLE ON CODE	S/C NO.
284A	244-63202-101	PACKAGE, Electrical spray tank Aero 14								1	FR	
	244-54032	.	BOX ASSEMBLY, Electrical spray tank Aero 14 complete							1	FR	
	244-54029	.	.	SUPPORT, Electrical spray tank Aero 14 assembly of						1	FR	
-1	244-54029-3	.	.	.	SUPPORT, Electrical spray tank Aero 14					1	FR	
-2	99871-P. 098	.	.	.	RECEPTACLE (UC) (61864)					1	FR	
-3	MS3103H-20-29P	.	.	RECEPTACLE						1	FR	
	ATTACHING PARTS											
-4	AN365-440	.	.	NUT						4	FR	
-5	2W18-4L	.	.	WASHER, Flat (NA) (89372)						4	FR	
-6	AN507-440R8	.	.	SCREW						4	FR	
	---*---											
-7	MS3103H-28-21P	.	.	RECEPTACLE						1	FR	
	ATTACHING PARTS											
-8	AN365-632	.	.	NUT						4	FR	
-9	2W18-6L	.	.	WASHER, Flat (NA) (89372)						4	FR	
-10	AN507-632R8	.	.	SCREW						4	FR	
	---*---											
-11	AN365-1032	.	.	NUT						1	FR	
-12	2W18-10M	.	.	WASHER, Flat (NA) (89372)						1	FR	
-13	2W1AL-14-14-16	.	.	WASHER, Plain (NA) (89372)						1	FR	
-14	AN507-1032R10	.	.	SCREW						1	FR	
-15	244-954029	.	.	PLATE, Electrical spray tank Aero 14 assembly of						1	FR	
-16	244-954029-3	.	.	.	PLATE, Electrical spray tank Aero 14					1	FR	
-17	PF3-1/2-38	.	.	.	STUD (DZ) (72794)					4	FR	
	PS3-1/2	.	.	.	SPRING (DZ) (72794)					4	FR	
	PC3-1/2	.	.	.	CUP (DZ) (72794)					4	FR	
-18	11995	.	.	.	LIGHT ASSEMBLY (KNM) (75237)					1	FR	
	K7000-08-6	.	.	.	CLINCHNUT (GMC) (72914)					3	FR	
-19	8858K18	.	.	SWITCH (CUT) (15605)						3	FR	
-20	7263K10	.	.	SWITCH (CUT) (15605)						1	FR	
	244-954030	.	.	PANEL, Electrical spray tank Aero 14 assembly of						1	FR	
-21	244-954030-3	.	.	.	PANEL, Electrical spray tank Aero 14					1	FR	
-22	HEC-G10	.	.	.	GROMMET (Hoffman Engineering Corporation, South Norwalk, Conn.)					3	FR	
-23	21885	.	.	.	LIGHT ASSEMBLY (GMC) (72914)					1	FR	
-24	21000	.	.	.	LIGHT ASSEMBLY (GMC) (72914)					1	FR	
	209-54368	.	.	KNOB ASSEMBLY, T-208 console control						1	FR	
-25	209-54368-3	.	.	.	KNOB, T208 console control					1	FR	
-26	AN565D-632H8	.	.	.	SETSCREW					1	FR	
-27	MS25041-2	.	.	LIGHT ASSEMBLY						2	FR	
	AN3140-321	.	.	LAMP						2	FR	
-28	MS35214-27	.	.	SCREW						3	FR	
	244-54030	.	.	COVER, Electrical dust spray tank Aero 14 assembly of						1	FR	
-29	244-54030-3	.	.	.	GLASS COVER, Electrical dust spray tank Aero 14					1	FR	
-30	244-54031	.	.	.	NAMEPLATE, Cover electrical dust spray tank Aero 14					1	FR	
-31	99785-2	.	.	.	CROSSPIN (UC) (61864)					1	FR	
-32	2W18-10M	.	.	.	WASHER, Flat (NA) (89372)					1	FR	
-33	98293-2-140	.	.	.	STUD (UC) (61864)					1	FR	

THIS PAGE LEFT BLANK INTENTIONALLY

T-208A/T-249 PYLON FUSE AND RELAY BOX AND MK-12 STORE AFT FAIRING ASSEMBLY LH - APPLICABLE TO AIRCRAFT CODED (FR)

FIGURE & INDEX NO.	PART NUMBER	1	2	3	4	5	6	7	NOMENCLATURE	UNITS PER ASSY.	USABLE ON CODE	S/C NO.
285	209-63202-21								PACKAGE, Provision for external stores (superseded by 209-63202-121 for future procurement) (see Armament for additional breakdown)	1	KX	482, 524
	209-63202-121								PACKAGE, Provision for external stores (supersedes 209-63202-21 & superseded by 209-63202-221 for future procurement) (see Armament for additional breakdown)	1	FR	524, 537
	209-63202-221								PACKAGE, Provision for external stores (supersedes 209-63202-121 for future procurement) (see Armament and figure 285A for additional breakdown)	1	FR	
	209-63413-1		.						UNIVERSAL PYLON (for external stores BL 105) (see Armament)	1	KX	482, 524
	209-63413-71		.						UNIVERSAL PYLON (for external stores BL 105) (superseded by 209-63413-101 for future procurement) (see Armament)	1	FR	524, 537
	209-63413-101		.						UNIVERSAL PYLON (for external stores BL 105) (supersedes 209-63413-71 for future procurement) (see Armament and figure 285A)	1	FR	
-1	209-543112		.	.					ELECTRICAL BOX ASSEMBLY, T-249 fuse and relay pylon (superseded by 209-543112-61 for future procurement) 209-543112 not to be used for replacement on any aircraft) (see Armament)	1	FR	537
	209-543112-61		.	.					ELECTRICAL BOX ASSEMBLY, T-249 fuse and relay pylon (supersedes 209-543112 and superseded by 244-54066 for future procurement) (see Armament)	1	FR	537
	244-54066		.	.					ELECTRICAL BOX ASSEMBLY, T-249 fuse and relay pylon (component of 209-63202-221 package supersedes 209-543112-61 for future procurement) (see Armament and figure 285A)	1	FR	
-2	342006	*1	.	.	.				FUSE HOLDER (LTF) (75915)	4	FR	
-3	442006	*1	.	.	.				FUSE HOLDER (LTF) (75915)	1	FR	
	300-A	*2	.	.	.				FUSE HOLDER (FUSE) (84613)	5	FR	
-4	MDF-15		.	.	.				FUSE (power) (BUS) (71400)	1	FR	
-5	MDF-15		.	.	.				FUSE (power) (BUS) (71400)	1	FR	
-6	MDF-25		.	.	.				FUSE (power) (BUS) (71400)	1	FR	
-7	MDF-25		.	.	.				FUSE (power) (BUS) (71400)	1	FR	
-8	414035	*1	.	.	.				FUSE (test) (LTF) (75915)	1	FR	
	MDF-30	*2	.	.	.				FUSE (test) (BUS) (71400)	1	FR	
-9	645-93		.	.	.				RELAY (emergency power) (COE) (71688) (supersedes 650-4063 (COE) (71688) for future procurement)	1	FR	
-10	645-93		.	.	.				RELAY (fin control) (COE) (71688) (supersedes 650-4063 (COE) (71688) for future procurement)	1	FR	
-11	645-93		.	.	.				RELAY (T control) (COE) (71688) (supersedes 650-4063 (COE) (71688) for future procurement)	1	FR	
-12	AN365-832		.	.	.				NUT	10	FR	
-13	2W18-8L		.	.	.				WASHER, Flat (NA) (89372)	10	FR	
-14	AN507-832R9		.	.	.				SCREW	10	FR	
-15	MS24143-1		.	.	.				RELAY (power)	1	FR	
-16	AN365-1032		.	.	.				NUT	4	FR	
-17	2W18-10M		.	.	.				WASHER, Flat (NA) (89372)	8	FR	
-18	AN507-1032R12		.	.	.				SCREW	4	FR	
-19	W1034-BHRS4R		.	.	.				SWITCH (fin extension test) (RHS) (81640)	1	FR	
-20	209-543117	*1	.	.	.				BUS BAR ASSEMBLY, T-249 fuse and relay pylon box	1	FR	
	209-543117-11	*2	.	.	.				BUS BAR ASSEMBLY, T-249 fuse and relay pylon box	1	FR	
-21	AN365-440	*1	.	.	.				NUT	5	FR	
-22	2W1AL8-8-16	*1	.	.	.				WASHER, Plain (NA) (89372)	10	FR	
-23	AN515-4R5	*1	.	.	.				SCREW	5	FR	
-24	209-540146-3		.	.	.				BUS BAR, MK-7 pylon electrical	3	FR	
-25	209-543106		.	.	.				BUS BAR ASSEMBLY, T-208 electrical emergency power X1 to B1	1	FR	
-26	1J1-1A3-12		.	.	.				JUMPER, Wire (NA) (89372)	1	FR	
-27	1J1-3-3-12		.	.	.				JUMPER, Wire (NA) (89372)	1	FR	
-28	AN507-1032R12		.	.	.				SCREW	3	FR	
	2W1AL14-14-16		.	.	.				WASHER, Plain (NA) (89372)	3	FR	
	2W18-10M		.	.	.				WASHER, Flat (NA) (89372)	3	FR	
	AN365-1032		.	.	.				NUT	3	FR	
-29	209-543115		.	.	.				ELECTRICAL BOX, T-249 fuse and relay pylon (not to be used for replacement on any aircraft)	1	FR	
-30	209-543116		.	.	.	.			ELECTRICAL PLATE, T-249 fuse and relay pylon (not to be used for replacement on any aircraft)	1	FR	
	244-54066		.	.	.				ELECTRICAL BOX ASSEMBLY, T-249 fuse and relay pylon (see figure 285A for breakdown)	1		
-31	209-543112-3		.	.	.				SEAL, T-249 fuse and relay pylon plate	1	FR	
-32	29502-C-22		.	.	.				GROMMET (UC) (61864)	1	FR	
-33	209-543120		.	.					FAIRING ASSEMBLY, BL 105 universal pylon aft lower (for MK-12 store) (superseded by 209-543120-11 for future procurement) (see Armament)	1	FR	
	209-543120-11		.	.					FAIRING ASSEMBLY, BL 105 universal pylon aft lower (for MK-12 store) (supersedes 209-543120 and is superseded by 209-543120-21 for future procurement) (209-543120-11 not to be used for replacement on any aircraft) (see Armament)	1	FR	
	209-543120-21		.	.					FAIRING ASSEMBLY, BL 105 universal pylon aft lower (for MK-12 store) (supersedes 209-543120-11 for future procurement) (see Armament)	1	FR	
-34	209-543121	*4	.	.	.				BRACKET ASSEMBLY, Electrical T-208 fuse and spare fuse	1	FR	
	209-543121-11	*6	.	.	.				BRACKET ASSEMBLY, Electrical T-208 fuse and spare fuse	1	FR	
-35	44206	*4	.	.	.				FUSE POST (LTF) (75915)	1	FR	
-36	342006	*4	.	.	.				FUSE POST (LTF) (75915)	16	FR	

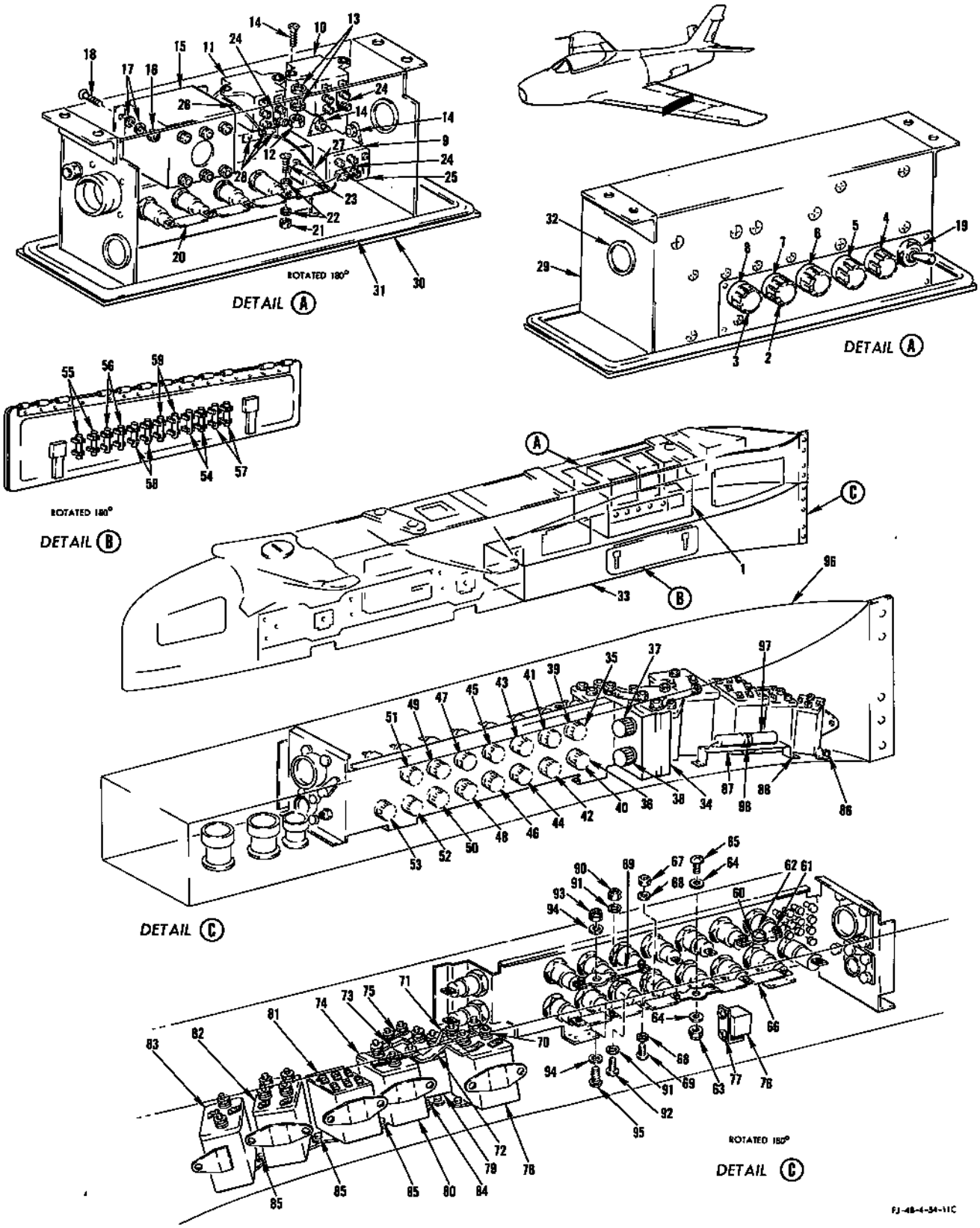

FIGURE 285 - T-208A/T-249 PYLON FUSE AND RELAY BOX AND MK-12 STORE AFT FAIRING ASSEMBLY (LH) - APPLICABLE TO AIRCRAFT CODED (FR)

T-208A/T-249 PYLON FUSE AND RELAY BOX AND MK-12 STORE AFT FAIRING ASSEMBLY LH - APPLICABLE TO AIRCRAFT CODED (FR)

FIGURE & INDEX NO.	PART NUMBER	1	2	3	4	5	6	7	NOMENCLATURE	UNITS PER ASSY.	USABLE ON CODE	S/C NO.
285	300-A	*6	.	.	.				FUSE POST (FUSE) (84613)	17	FR	
-37	MDF-3		.	.	.				FUSE (IFI in light) (BUS) (71400)	1	FR	
-38	MDF-3		.	.	.				FUSE (fin extension light) (BUS) (71400)	1	FR	
-39	MDF-25		.	.	.				FUSE (fin extension) (BUS) (71400)	1	FR	
-40	MDF-25		.	.	.				FUSE (fin retract) (BUS) (71400)	1	FR	
-41	MDF-25		.	.	.				FUSE (heat) (BUS) (71400)	1	FR	
-42	MDF-25		.	.	.				FUSE (IFI power) (BUS) (71400)	1	FR	
-43	414035	*4	.	.	.				FUSE (test) (LTF) (75915)	1	FR	
	MDF-30	*6	.	.	.				FUSE (test) (BUS) (71400)	1	FR	
-44	MDF-20		.	.	.				FUSE (F power) (BUS) (71400)	1	FR	
-45	MDF-3		.	.	.				FUSE (IFI out light) (BUS) (71400)	1	FR	
-46	MDF-15		.	.	.				FUSE (IFI operating) (BUS) (71400)	1	FR	
-47	MDF-5		.	.	.				FUSE (T/O and F selector) (BUS) (71400)	1	FR	
-48	MDF-5		.	.	.				FUSE (select switch) (BUS) (71400)	1	FR	
-49	MDF-20		.	.	.				FUSE (R-2) (BUS) (71400)	1	FR	
-50	MDF-15		.	.	.				FUSE (IFI and A/S emergency) (BUS) (71400)	1	FR	
-51	MDF-20		.	.	.				FUSE (R-1) (BUS) (71400)	1	FR	
-52	MDF-15		.	.	.				FUSE (A/S operating) (BUS) (71400)	1	FR	
-53	MDF-3		.	.	.				FUSE (A/S light) (BUS) (71400)	1	FR	
-54	MDF-3		.	.	.				FUSE (spare) (BUS) (71400)	2	FR	
-55	MDF-5		.	.	.				FUSE (spare) (BUS) (71400)	2	FR	
-56	414035	*4	.	.	.				FUSE (spare) (LTF) (75915)	2	FR	
	MDF-30	*6	.	.	.				FUSE (spare) (BUS) (71400)	2	FR	
-57	MDF-15		.	.	.				FUSE (spare) (BUS) (71400)	2	FR	
-58	MDF-20		.	.	.				FUSE (spare) (BUS) (71400)	2	FR	
-59	MDF-25		.	.	.				FUSE (spare) (BUS) (71400)	2	FR	
-60	209-540147-13		.	.	.				BUS BAR, MK-7 pylon electrical fuse	1	FR	
	ATTACHING PARTS											
-61	AN515-4R5	*4	.	.	.				SCREW	2	FR	
	2W1AL8-8-16	*4	.	.	.				WASHER, Plain (NA) (89372)	4	FR	
	AN365-440	*4	.	.	.				NUT	2	FR	
	---*---											
-62	AN520-10R8		.	.	.				SCREW	1	FR	
	2W1AL14-14-16		.	.	.				WASHER, Plain (NA) (89372)	2	FR	
	AN365-1032		.	.	.				NUT	1	FR	
-63	AN365-1032		.	.	.				NUT	1	FR	
-64	2W1AL14-14-16		.	.	.				WASHER, Plain (NA) (89372)	2	FR	
-65	AN520-10R8		.	.	.				SCREW	1	FR	
-66	209-543122		.	.	.				BUS BAR ASSEMBLY, Electrical T-208 fuse to emergency power relay	1	FR	
	ATTACHING PARTS											
-67	AN365-440	*4	.	.	.				NUT	7	FR	
-68	2W1AL8-8-16	*4	.	.	.				WASHER, Plain (NA) (89372)	14	FR	
-69	AN515-4R5	*4	.	.	.				SCREW	7	FR	
	---*---											
-70	209-540146-3		.	.	.				BUS BAR, Electrical MK-7 pylon	1	FR	
-71	209-543126		.	.	.				BUS BAR, Electrical T-208A emergency power to A1 power B2	1	FR	
-72	209-543125		.	.	.				BUS BAR, Electrical T-208A power to emergency assembly of	1	FR	
-73	209-543131		.	.	.				BUS BAR, T-208A electrical power to R1 and R2 power assembly of (supersedes 209-543124 for future procurement) (209-543124 not to be used for replacement of any aircraft)	1	FR	
-74	209-543105		.	.	.				BUS BAR, T-208A emergency power X1 to B1 assembly of	1	FR	
-75	209-540146-5		.	.	.				BUS BAR, Electrical MK-7 pylon	1	FR	
-76	650-1710		.	.	.				RELAY (AC power) (COE) (71688)	1	FR	
	ATTACHING PARTS											
-77	AN515-4R4		.	.	.				SCREW	2	FR	
	AN936A4		.	.	.				WASHER	2	FR	
	---*---											
-78	645-93		.	.	.				RELAY (emergency power) (COE) (71688) (supersedes 650-4063 (COE) (71688) for future procurement)	1	FR	
	ATTACHING PARTS											
	AN507-832R7		.	.	.				SCREW	2	FR	
	2W18-8L		.	.	.				WASHER, Flat (NA) (89372)	2	FR	
	AN365-832		.	.	.				NUT	2	FR	
	---*---											
-79	7064-208		.	.	.				RELAY (power) (COE) (71688)	1	FR	
	ATTACHING PARTS											
	AN507-832R7		.	.	.				SCREW	2	FR	
	2W18-8L		.	.	.				WASHER, Flat (NA) (89372)	2	FR	
	AN365-832		.	.	.				NUT	2	FR	
	---*---											
-80	650-4269		.	.	.				RELAY (R1 and R2 power) (COE) (71688)	1	FR	
-81	AN3311-2		.	.	.				RELAY (IFI and A/S)	1	FR	
-82	645-93		.	.	.				RELAY (fin control) (COE) (71688) (supersedes 650-4063 (COE) (71688) for future procurement)	1	FR	
-83	650-4269		.	.	.				RELAY (F control) (COE) (71688)	1	FR	
	ATTACHING PARTS											
-84	AN507-832R8		.	.	.				SCREW	4	FR	
	2W18-8L		.	.	.				WASHER, Flat (NA) (89372)	1	FR	
	AN365-832		.	.	.				NUT	1	FR	
	---*---											
-85	AN507-832R8		.	.	.				SCREW	3	FR	
	2W18-8L		.	.	.				WASHER, Flat (NA) (89372)	3	FR	

T-208A/T-249 PYLON FUSE AND RELAY BOX AND MK-12 STORE AFT FAIRING ASSEMBLY LH - APPLICABLE TO AIRCRAFT CODED (FR)

FIGURE & INDEX NO.	PART NUMBER	1	2	3	4	5	6	7	NOMENCLATURE	UNITS PER ASSY.	USABLE ON CODE	S/C NO.
285	AN365-832		.	.	.				NUT	3	FR	
-86	AN507-832R7		.	.	.				SCREW	1	FR	
	2W18-8L		.	.	.				WASHER, Flat (NA) (89372)	1	FR	
	AN365-832		.	.	.				NUT	1	FR	
-87	209-540130		.	.	.				SUPPORT ASSEMBLY, Electrical T-208 condenser LH side	1	FR	
	ATTACHING PARTS											
-88	AN507-832R7		.	.	.				SCREW	4	FR	
	2W18-8L		.	.	.				WASHER, Flat (NA) (89372)	4	FR	
	AN365-832		.	.	.				NUT	4	FR	
	---*---											
-89	209-540147-9		.	.	.				BUS BAR, MK-7 pylon electrical fuse	1	FR	
	ATTACHING PARTS											
-90	AN365-440	*4	.	.	.				NUT	3	FR	
-91	2W1AL8-8-16	*4	.	.	.				WASHER, Plain (NA) (89372)	6	FR	
-92	AN515-4R5	*4	.	.	.				SCREW	3	FR	
	---*---											
-93	AN365-1032		.	.	.				NUT	1	FR	
-94	2W1AL14-14-16		.	.	.				WASHER, Plain (NA) (89372)	2	FR	
-95	AN520-10R8		.	.	.				SCREW	1	FR	
-96	209-63256-1	*3	.	.	.				FAIRING, BL 105 universal pylon power (superseded by 209-63256-101 for future procurement) (see Armament)	1	FR	
	209-63256-101	*5	.	.	.				FAIRING, BL 105 universal pylon power (supersedes 209-63256-1 and superseded by 209-63256-201 for future procurement) (see Armament)	1	FR	
	209-63256-201		.	.	.				FAIRING, BL 105 universal pylon power (supersedes 209-63256-101 for future procurement)	1	FR	
-97	29F476		.	.	.				CAPACITOR (GE) (95412) (50V polar type)	1	FR	
	ATTACHING PARTS											
-98	MS21919WDG6		.	.	.				CLAMP	1	FR	
	AN520-10R8		.	.	.				SCREW	1	FR	
	2W13-10M		.	.	.				WASHER, Flat (NA) (89372)	1	FR	
	---*---											

NOTE: *1 Parts used on 209-543112 assembly only
*2 Parts used on 209-543112-61 assembly only
*3 Parts used on 209-543120 assembly only
*4 Parts used on 209-543120 and 209-543120-11 assemblies only
*5 Parts used on 209-543120-11 and 209-543120-21 assemblies only
*6 Parts used on 209-543120-21 assembly only

T-208A/T-249 FUSE AND RELAY BOX AND MK-12 STORE AFT FAIRING ASSEMBLY - APPLICABLE TO AIRCRAFT CODED (FR)

FIGURE & INDEX NO.	PART NUMBER	1 2 3 4 5 6 7 NOMENCLATURE	UNITS PER ASSY.	USABLE ON CODE	S/C NO.
285A	209-63202-221	PACKAGE, Provision for external stores (supersedes 209-63202-121 for future procurement) (see Armament for additional breakdown)	1	FR	
	209-63413-101	. UNIVERSAL PYLON (LH) (for external stores BL105) (added by Service Change No. 537 and supersedes 209-63413-71 for future procurement)	1	FR	
-1	244-54066	. . ELECTRICAL BOX ASSEMBLY, T-249 fuse and relay pylon (added by Service Change No. 537 on pylons 209-63413-71, Serial numbers H-001 through H-222)	1	FR	
-2	300-A	. . . HOLDER, Fuse (FUSE) (84613)	5	FR	
-3	MS90079-7-1	. . . FUSE (power)	2	FR	
-4	MDF-25	. . . FUSE (power) (BUS) (71400)	2	FR	
-5	MS90079-9-1	. . . FUSE (test)	1	FR	
-6	W1034-BHS4	. . . SWITCH (test) (RHS) (81640)	1	FR	
	244-54066-11	. . . BOX SUBASSEMBLY, Electrical T-249 relay	1	FR	
-7	244-54043	. . . . BOX, Electrical T-249 relay	1	FR	
-8	244-54044	. . . . BASE, Electrical box	1	FR	
-9	244-54044-9	. . . . . SEAL, Electrical box	1	FR	
	244-54073	. . . COVER, Electrical terminal protection T-249 relay box	1	FR	
	ATTACHING PARTS				
-10	AN365-632	. . . . NUT	7	FR	
-11	2W18-6L	. . . . WASHER, Flat (NA) (89372)	14	FR	
-12	AN515-6R8	. . . . SCREW	3	FR	
-13	AN515-6R10	. . . . SCREW	4	FR	
-14	AN365-440	. . . . NUT	2	FR	
-15	2W18-4L	. . . . WASHER, Flat (NA) (89372)	4	FR	
-16	AN515-4R8	. . . . SCREW	2	FR	
	---*---				
-17	AN507-1032R10	. . . SCREW	3	FR	
	2W1AL-14-14-16	. . . WASHER, Plain (NA) (89372)	3	FR	
	2W18-10M	. . . WASHER, Flat (NA) (89372)	3	FR	
	AN365-1032	. . . NUT	3	FR	
-18	9330-4106	. . . RELAY (T control) (LR) (35344)	1	FR	
-19	9330-4106	. RELAY (fin control) (LR) (35344)	1	FR	
	ATTACHING PARTS				
-20	AN365-832	. . . NUT	8	FR	
	2W18-8L	. . . WASHER, Flat (NA) (89372)	8	FR	
	AN507-832R10	. . . SCREW	8	FR	
	---*---				
-21	MS24143-D1	. . . RELAY (power)	1	FR	
	ATTACHING PARTS				
-22	AN365-1032	. . . NUT	4	FR	
	2W18-10M	. . . WASHER, Flat (NA) (89372)	4	FR	
	AN507-1032R10	. . . SCREW	4	FR	
	---*---				
-23	MS21919WDG17	. . . CLAMP	1	FR	
	ATTACHING PARTS				
	AN365-1032	. . . NUT	1	FR	
	2W18-10M	. . . WASHER, Flat (NA) (89372)	2	FR	
	AN520-10R8	. . . SCREW	1	FR	
	---*---				
-24	294189C-22	. . . GROMMET (MKL) (96530)	1	FR	
-25	294189C-18	. . . GROMMET (MKL) (96530)	1	FR	
-26	AN365-440	. . . NUT	4	FR	
	AN515-4R10	. . . SCREW	1	FR	
	2W18-4L	. . . WASHER, Flat (NA) (89372)	8	FR	
	AN515-4R7	. . . SCREW	3	FR	
-27	AN365-832	. . . NUT	4	FR	
	2L7-2	. . . LUG, Safety (NA) (89372)	1	FR	
	2W18-8L	. . . WASHER, Flat (NA) (89372)	8	FR	
	AN515-8R10	. . . SCREW	4	FR	
-28	397-12	. . . COVER, Electrical terminal block (HEGE) (94640)	2	FR	
	ATTACHING PARTS				
	AN365-440	. . . NUT	4	FR	
	2W18-4L	. . . WASHER, Flat (NA) (89372)	4	FR	
	AN515-4R6	. . . SCREW	2	FR	
	AN507-4R7	. . . SCREW	2	FR	
	---*---				
-29	209-540147-15	. . . BUS BAR, MK-7 pylon electrical fuses (NA) (89372)	1	FR	
	ATTACHING PARTS				
	AN365-1032	. . . NUT	1	FR	
	2W1AL-14-14-16	. . . WASHER, Plain (NA) (89372)	2	FR	
	AN520-10R7	. . . SCREW	1	FR	
	---*---				
-30	244-54067	. . FAIRING ASSEMBLY, BL 105 universal pylon aft lower (see Armament)	1	FR	
-31	209-543121-21	. . . BRACKET ASSEMBLY (NA) (89372)	1	FR	
-32	300-A-MTG	. . . HOLDER, Fuse (FUSE) (84613)	17	FR	
-33	MS90079-2-1	. . . FUSE (IFI in light)	1	FR	
-34	MS90079-2-1	. . . FUSE (fin extension light)	1	FR	
-35	MS90079-26-1	. . . FUSE (fin extension)	1	FR	
-36	MS90079-26-1	. . . FUSE (fin retract)	1	FR	
-37	MDF-25	. . . FUSE (IFI power) (BUS) (71400)	1	FR	
-38	MDF-25	. . . FUSE (heat) (BUS) (71400)	1	FR	
-39	MS90079-8-1	. . . FUSE (F power)	1	FR	
-40	MS90079-9-1	. . . FUSE (test)	1	FR	
-41	MS90079-7-1	. . . FUSE (IFI operating)	1	FR	
-42	MS90079-2-1	. . . FUSE (IFI out light)	1	FR	

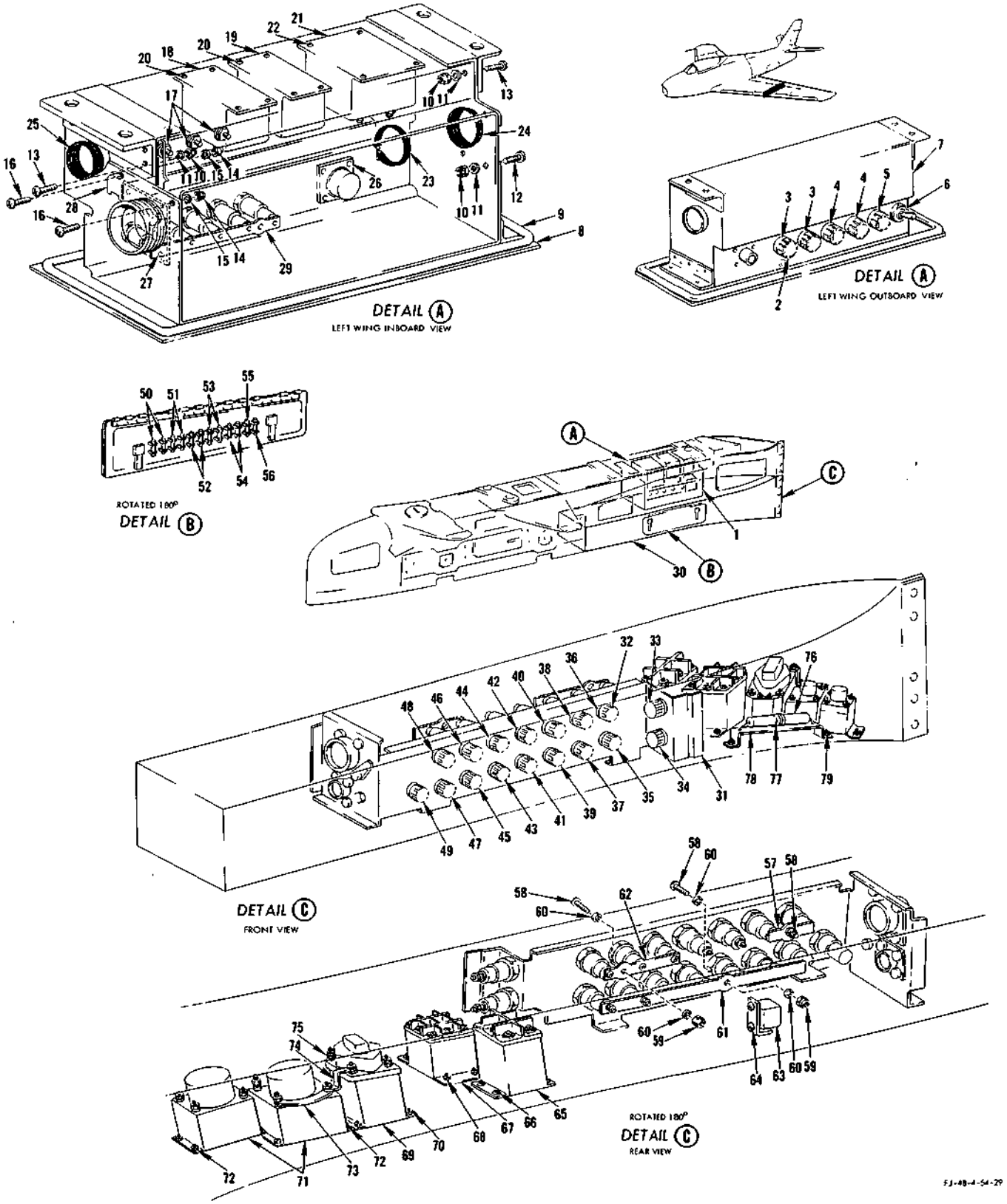

FIGURE 285A - T-208A/T-249 FUSE AND RELAY BOX AND MK-12 STORE AFT FAIRING ASSEMBLY - APPLICABLE TO AIRCRAFT CODED (FR)

ALL DATA DELETED FROM PAGE 795

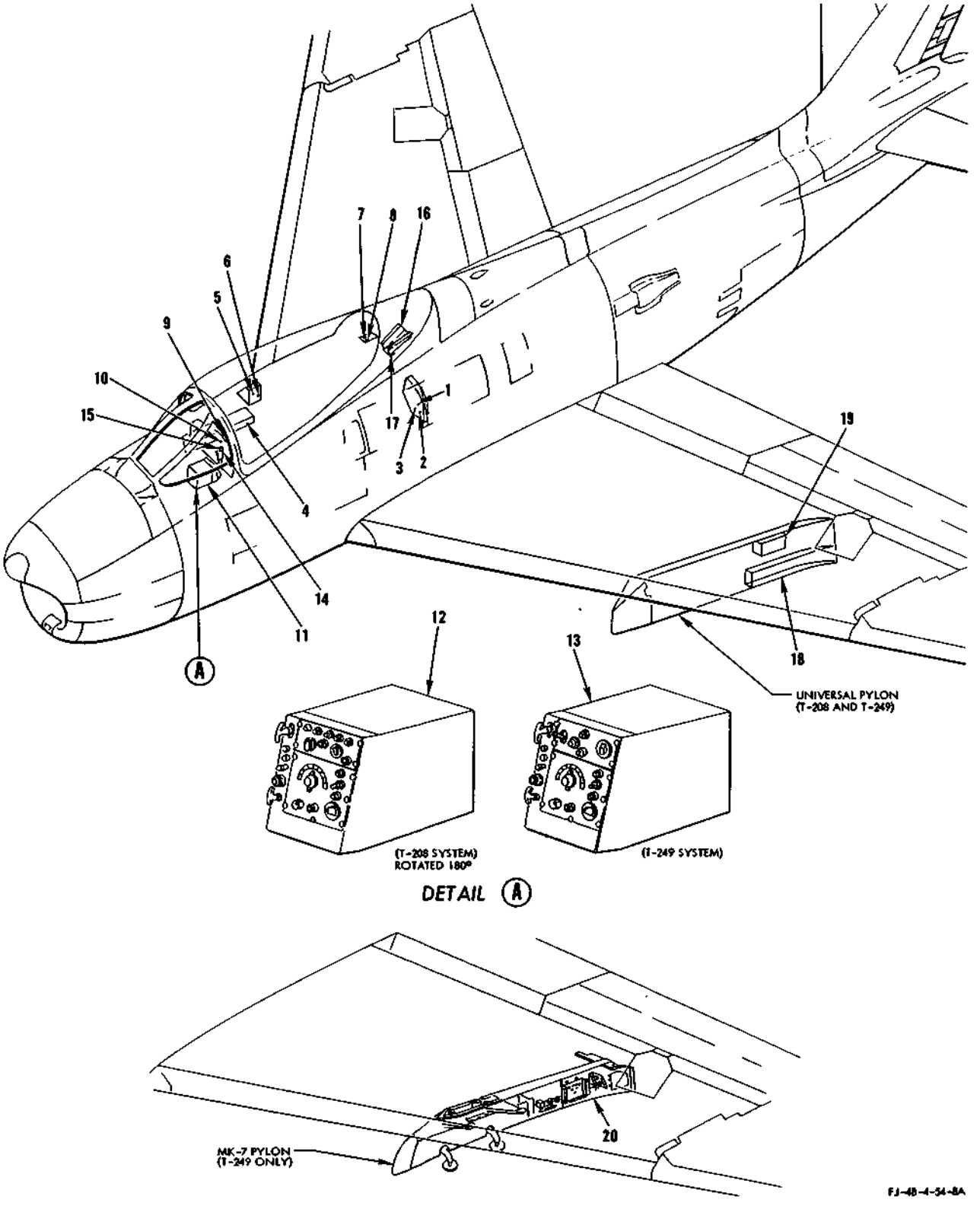

FIGURE 286 - T-208/T-249 SYSTEM - APPLICABLE TO AIRCRAFT CODED (FR)

T-208/T-249 SYSTEM - APPLICABLE TO AIRCRAFT CODED (FR)

FIGURE & INDEX NO.	PART NUMBER	1 2 3 4 5 6 7 NOMENCLATURE	UNITS PER ASSY.	USABLE ON CODE	S/C NO.
286	209-540110	PANEL ASSEMBLY, Circuit breaker station 156 LH side (see figure 304 for complete breakdown)	1		525
-1	MS25017-5	. CIRCUIT BREAKER (T-249 fin and TA-TB test)	1	FR	
-2	PDLM-60	. CIRCUIT BREAKER (T-208/T-249 power) (SPTD) (82647)	1	FR	
-3	PDLM-60	. CIRCUIT BREAKER (T-208/T-249 emergency power) (SPTD) (82647)	1	FR	
	209-54026	CONSOLE ASSEMBLY, RH forward (see figure 306 for complete breakdown)	1		
-4	MS25017-5	. CIRCUIT BREAKER (warning light test and rudder pedal shaker)	1	FR	
	209-54472	PANEL ASSEMBLY, Circuit breaker and fuse cockpit RH rear complete (see figure 319 for complete breakdown)	1		
-5	312003	. FUSE (T-208 power) (LTF) (75915)	1	FR	
-6	MS25017-15	. CIRCUIT BREAKER (bomb and gun trigger)	1	FR	
	209-54106	PANEL ASSEMBLY, Electrical test switch complete (see figure 299 for complete breakdown)	1		
-7	W11034-BHR	. SWITCH (TA-TB test) (RHS) (81640)	1	FR	
	2W1AL40-32-16	. WASHER, Plain (NA) (89372)	1	FR	
-8	W1034-BHR	. SWITCH (T-249 fin extension test) (RHS) (81640)	1	FR	
	2W1AL40-32-16	. WASHER, Plain (NA) (89372)	1	FR	
-9	MS25041-6	LIGHT ASSEMBLY (T/O indicator)	1	FR	
	AN3140-327	. LAMP	1	FR	
	209-510108	PANEL ASSEMBLY, Pilots instrument complete (see figure 318 for complete breakdown)	1		
-10	1AT3	. SWITCH ASSEMBLY (angle select) (MCS) (91929)	1	FR	
-11	209-54226	SHIELD ASSEMBLY, Center electrical pedestal complete (see figure 295 for breakdown)	1		
-12	G-7455A-1	. CONTROL BOX (T-208 system) (GMC) (72914) (GFP)	1	FR	
-13	56A18D1	. T-249 INFLIGHT MONITOR AND CONTROL (GFP)	1	FR	
-14	PEI-116C	GRIP ASSEMBLY, Pilots control stick (PIQA) (81380) (see Surface and Secondary Controls)	1	FR	
-15	No Number	. SWITCH ASSEMBLY (bomb button) (PIQA) (81380)	1	FR	
-16	209-54101	PANEL ASSEMBLY, Canopy deck relay complete (see figure 299 for complete breakdown)	1		
-17	9220-PM	. RELAY (landing gear downlock) (LR) (35344)	1	FR	
-18	209-543120	FAIRING ASSEMBLY, BL105 universal pylon aft lower electrical (for MK-12 store) (see figure 285 for breakdown)	1		
-19	209-543112-61	ELECTRICAL BOX ASSEMBLY, T-249 fuse and relay pylon (see figure 285 for breakdown) (supersedes 209-543112 for future procurement)	1		
-20	209-540140	ELECTRICAL EQUIPMENT ASSEMBLY, MK-7 pylon (see figure 287 for breakdown)	1		

NOTE: The above information has been compiled from 209-54002, Page 70.2 (E change)

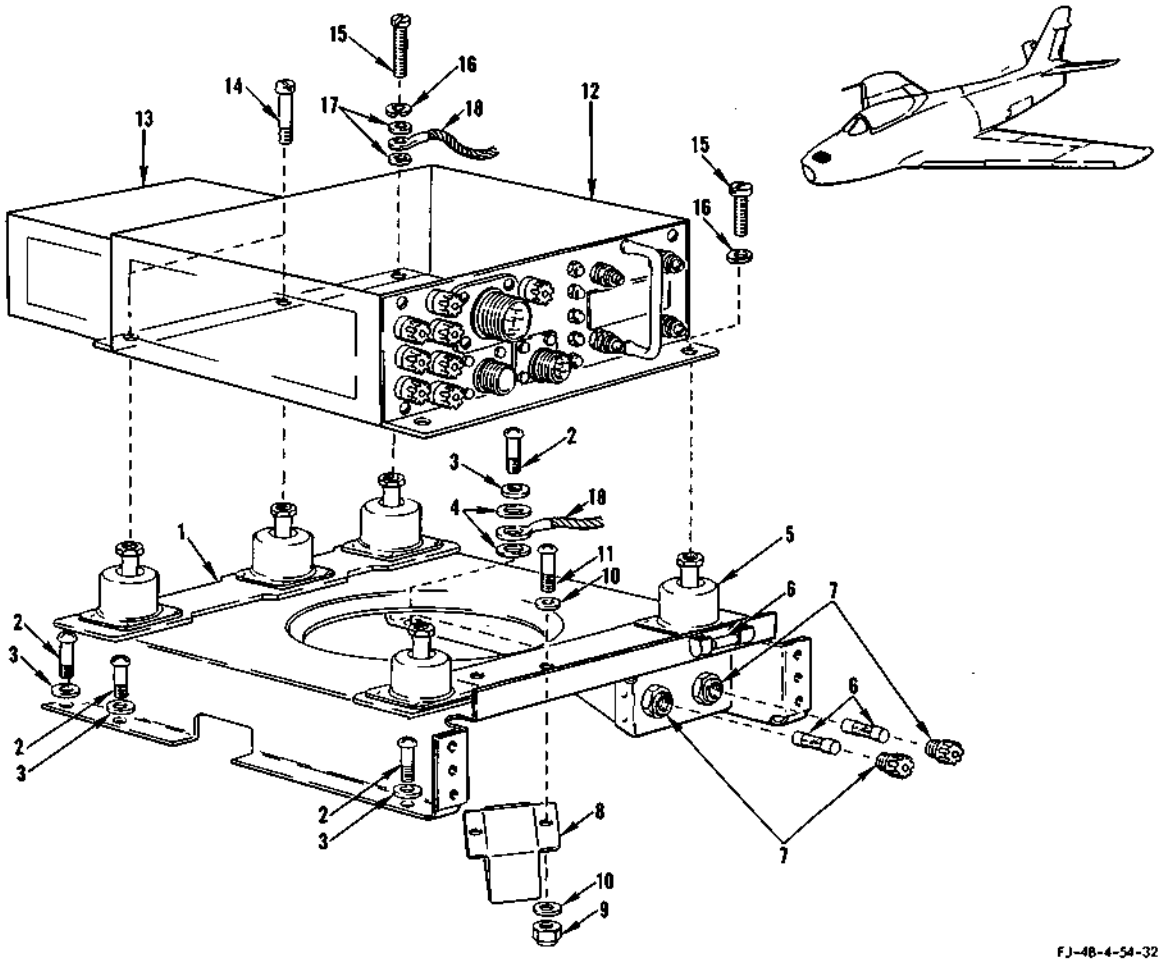

FIGURE 286A - ELECTRICAL BOMB FUZING PACKAGE - APPLICABLE TO AIRCRAFT CODED (FR)

FIGURE & INDEX NO.	PART NUMBER	1	2	3	4	5	6	7	NOMENCLATURE	UNITS PER ASSY.	USABLE ON CODE	S/C NO.
286A	209-63202-91	PACKAGE, Electrical fuzing								1	FR	
	244-54057	.	SUPPORT ASSEMBLY, Electrical fuzing power supply complete							1	FR	
-1	244-54056	.	.	SUPPORT, Assembly of electrical fuzing power supply						1	FR	
	ATTACHING PARTS											
-2	AN515-8R8	.	.	SCREW						5	FR	
-3	2W18-8L	.	.	WASHER, Flat (NA) (89372)						5	FR	
-4	2W18-10	.	.	WASHER, Flat (NA) (89372)						2	FR	
	---+---											
-5	170A-5-1/2	.	.	.	ISOLATOR (K. W. Johnson & Co. Inc., Dayton, Ohio)					5	FR	
-6	MS90079-2-1	.	.	FUSE						3	FR	
-7	300-A-MTG	.	.	HOLDER, Fuse (FUSE) (84613)						2	FR	
-8	9229-4629	.	.	RELAY (LR) (00614)						1	FR	
	ATTACHING PARTS											
-9	AN365-832	.	.	NUT						2	FR	
-10	2W18-8L	.	.	WASHER, Flat (NA) (89372)						4	FR	
-11	AN515-8R10	.	.	SCREW						2	FR	
	---+---											
-12	AM-2014/AWW-1	.	POWER SUPPLY (Aero 3A) (GFP)							1	FR	
-13	0562/AWW-1	.	OSCILLATOR (Aero 3A) (GFP)							1	FR	
	ATTACHING PARTS											
-14	LP509-8-9	.	SCREW (Long-Lok Co., Santa Monica, California) (03038)							2	FR	
-15	AN503-8R10	.	SCREW							3	FR	
-16	MS35333-80	.	WASHER, Lock							3	FR	
-17	2W18-8L	.	WASHER, Flat (NA) (89372)							2	FR	
	---+---											
-18	MS25083-2BB6	.	JUMPER ASSEMBLY							1	FR	
	C/2612/AWW-1	.	CONTROL, Fuse function (GFP)							1	FR	
	CA18333-2007	.	ADAPTER (CED) (71468)							1	FR	

MK-7 PYLON FUSE AND RELAY PANEL ASSEMBLY - APPLICABLE TO AIRCRAFT CODED (FR)

FIGURE & INDEX NO.	PART NUMBER	1	2	3	4	5	6	7	NOMENCLATURE	UNITS PER ASSY.	USABLE ON CODE	S/C NO.
287	209-63202-31								PACKAGE, Provision for external stores (superseded by 209-63202-131 for future procurement) (see Armament for additional breakdown) (reidentified as 209-63202-131 when Service Change No. 537 is incorporated)	1	FR	537, 482
	209-63202-131								PACKAGE, Provision for external stores (see Armament for additional breakdown)	1	FR	
	209-63313			.					MK-7 PYLON, For external stores BL 105 (superseded by 209-63313-31 for future procurement) (reidentified as 209-63313-31 when Service Change No. 537 is incorporated)	1	FR	537, 482
	209-63313-31			.					MK-7 PYLON, For external stores BL 105 (see Armament for additional breakdown)	1	FR	
	209-540140			.	.				ELECTRICAL EQUIPMENT ASSEMBLY, MK-7 pylon (superseded by 209-540140-21 for future procurement) (209-540140 not to be used for replacement on any aircraft) (see Armament)	1	FR	
	209-540140-21			.	.				ELECTRICAL EQUIPMENT ASSEMBLY, MK-7 pylon (supersedes 209-540140 and superseded by 244-54068 for future procurement) (see Armament) (reidentified as 244-54068 when Service Change is incorporated)	1	FR	537
	244-54068			.	.				ELECTRICAL EQUIPMENT ASSEMBLY, MK-7 pylon (component part of 209-63313-31 pylon) (supersedes 209-540140-21 for future procurement) (see Armament and figure 287A for breakdown)	1	FR	
-1	342006	*1	.	.	.				FUSE POST (LTF) (75915)	16	FR	
	300-A	*2	.	.	.				FUSE POST (FUSE) (84613)	16	FR	
	AN936A1016	*1	.	.	.				WASHER	16	FR	
-2	MDF-5		.	.	.				FUSE (BUS) (71400)	2	FR	
-3	MDF-15		.	.	.				FUSE (BUS) (71400)	3	FR	
-4	MSD-3		.	.	.				FUSE (BUS) (71400)	4	FR	
-5	MDF-20		.	.	.				FUSE (BUS) (71400)	3	FR	
-6	MDF-25		.	.	.				FUSE (BUS) (71400)	4	FR	
-7	442006	*1	.	.	.				FUSE POST (LTF) (75915)	1	FR	
	300-A	*2	.	.	.				FUSE POST (FUSE) (84613)	1	FR	
	AN936A1016	*1	.	.	.				WASHER	1	FR	
-8	414035	*1	.	.	.				FUSE (LTF) (75915)	1	FR	
	MDF-30	*2	.	.	.				FUSE (BUS) (71400)	1	FR	
-9	MDF-3		.	.	.				FUSE (spare) (BUS) (71400)	2	FR	
-10	MDF-5		.	.	.				FUSE (spare) (BUS) (71400)	1	FR	
-11	MDF-10		.	.	.				FUSE (spare) (BUS) (71400)	1	FR	
-12	MDF-15		.	.	.				FUSE (spare) (BUS) (71400)	1	FR	
-13	MDF-20		.	.	.				FUSE (spare) (BUS) (71400)	2	FR	
-14	MDF-25		.	.	.				FUSE (spare) (BUS) (71400)	2	FR	
-15	414035	*1	.	.	.				FUSE (spare) (LTF) (75915)	1	FR	
	MDF-30	*2	.	.	.				FUSE (spare) (BUS) (71400)	1	FR	
-16	209-540147-3		.	.	.				BUS BAR, MK-7 pylon electrical fuse	1	FR	
-17	209-540147-5	*1	.	.	.				BUS BAR, MK-7 pylon electrical fuse	1	FR	
	209-540147-7	*2	.	.	.				BUS BAR, MK-7 pylon electrical fuse	1	FR	
-18	209-540147-7		.	.	.				BUS BAR, MK-7 pylon electrical fuse	1	FR	
-19	209-540147-13		.	.	.				BUS BAR, MK-7 pylon electrical fuse	1	FR	
-20	209-540147-9		.	.	.				BUS BAR, MK-7 pylon electrical fuse	1	FR	
-21	AN365-440	*1	.	.	.				NUT	13	FR	
-22	2W1AL8-8-16	*1	.	.	.				WASHER, Plain (NA) (89372)	26	FR	
-23	AN515-4R7	*1	.	.	.				SCREW	13	FR	
-24	AN365-1032		.	.	.				NUT	3	FR	
-25	2W1AL14-14-16		.	.	.				WASHER, Plain (NA) (89372)	6	FR	
-26	AN520-10R8		.	.	.				SCREW	3	FR	
-27	650-1710		.	.	.				RELAY (COE) (71688)	1	FR	
	ATTACHING PARTS											
-28	AN515-4R4		.	.	.				SCREW	2	FR	
	2W18-4L		.	.	.				WASHER, Flat (NA) (89372)	2	FR	
	AN936A4		.	.	.				WASHER	2	FR	
	---*---											
-29	AN3311-2		.	.	.				RELAY	1	FR	
	ATTACHING PARTS											
-30	AN515-8R7		.	.	.				SCREW	2	FR	
	2W18-8L		.	.	.				WASHER, Flat (NA) (89372)	2	FR	
	---*---											
-31	650-4269		.	.	.				RELAY (COE) (71688)	1	FR	
	ATTACHING PARTS											
-32	AN515-8R7		.	.	.				SCREW	2	FR	
	2W18-8L		.	.	.				WASHER, Flat (NA) (89372)	2	FR	
	---*---											
-33	650-4063		.	.	.				RELAY (COE) (71688) (superseded by 645-93 (COE) (71688) for future procurement)	2	FR	
	645-93		.	.	.				RELAY (COE) (71688) (supersedes 650-4063 (COE) (71688) for future procurement)	2	FR	
	ATTACHING PARTS											
-34	AN515-8R7		.	.	.				SCREW	4	FR	
	2W18-8L		.	.	.				WASHER, Flat (NA) (89372)	4	FR	
	---*---											
-35	650-4269		.	.	.				RELAY (COE) (71688)	1	FR	
	ATTACHING PARTS											
-36	AN515-8R7		.	.	.				SCREW	2	FR	
	2W18-8L		.	.	.				WASHER, Flat (NA) (89372)	2	FR	

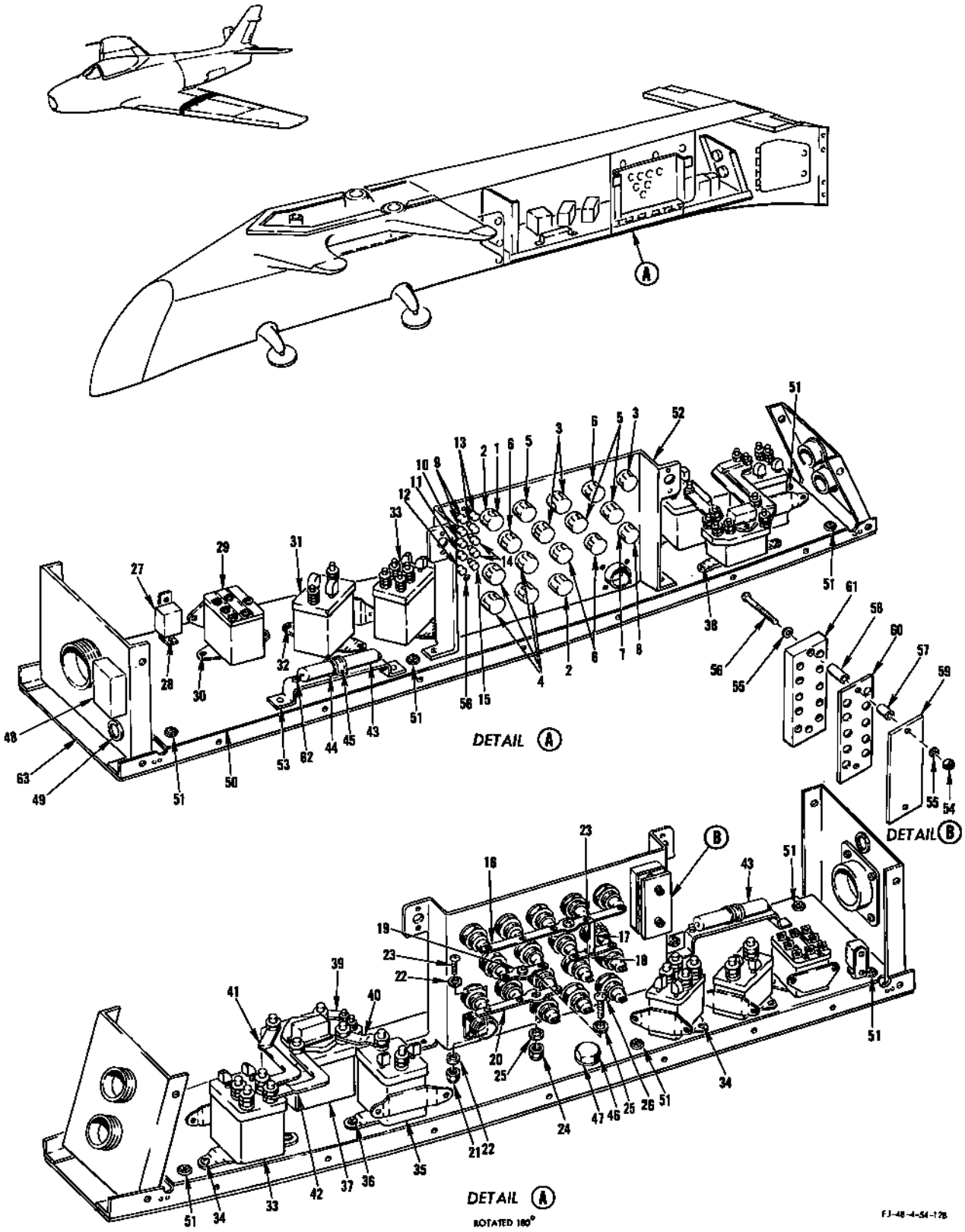

FIGURE 287 - MK-7 PYLON FUSE AND RELAY PANEL ASSEMBLY - APPLICABLE TO AIRCRAFT CODED (FR)

MK-7 PYLON FUSE AND RELAY PANEL ASSEMBLY - APPLICABLE TO AIRCRAFT CODED (FR)

FIGURE & INDEX NO.	PART NUMBER	1	2	3	4	5	6	7	NOMENCLATURE	UNITS PER ASSY.	USABLE ON CODE	S/C NO.
287-37	7064-208	.	.	.					RELAY (LR) (35344)	1	FR	
	ATTACHING PARTS											
-38	AN520-10R8	.	.	.					SCREW	2	FR	
	2W18-10M	.	.	.					WASHER, Flat (NA) (89372)	2	FR	
	AN341-6	.	.	.					NUT	1	FR	
	---*---											
-39	209-540146-5	.	.	.					BUS BAR, MK-7 pylon electrical	1	FR	
-40	209-540144	.	.	.					BUS BAR ASSEMBLY, MK-7 electrical power to R_1R_2	1	FR	
-41	209-54145	.	.	.					BUS BAR ASSEMBLY, MK-7 pylon electrical emergency power to power	1	FR	
-42	209-540143	.	.	.					BUS BAR ASSEMBLY, MK-7 pylon electrical power to emergency power	1	FR	
-43	29F476	.	.	.					CONDENSER (GE) (95412)	1	FR	
	ATTACHING PARTS											
-44	MS21919WDG6	.	.	.					CLAMP	1	FR	
-45	AN520-10R8	.	.	.					SCREW	1	FR	
	2W18-10M	.	.	.					WASHER, Flat (NA) (89372)	1	FR	
	---*---											
-46	AN5-5A	.	.	.					BOLT	1	FR	
-47	2W1AL24-24-32	.	.	.					WASHER, Plain (NA) (89372)	2	FR	
-48	AN3436-1-2	.	.	.					TERMINAL BLOCK ASSEMBLY	1	FR	
	397-2	.	.	.					COVER (HEGE) (94640)	1	FR	
-49	295202-6B	.	.	.					GROMMET (UC) (61864)	1	FR	
-50	209-540141 *1	.	.	.					PLATE ASSEMBLY, MK-7 pylon electrical	1	FR	
	209-540141-41 *2	.	.	.					PLATE ASSEMBLY, MK-7 pylon electrical	1	FR	
	ATTACHING PARTS											
-51	AN520-10R8	.	.	.					SCREW	6	FR	
	2W18-10M	.	.	.					WASHER, Flat (NA) (89372)	6	FR	
	---*---											
-52	209-540141-7 *3	.	.	.	.				BRACKET, MK-7 pylon electrical plate assembly	1	FR	
	209-540141-13 *4	.	.	.	.				BRACKET, MK-7 pylon electrical plate assembly	1	FR	
-53	209-540141-31	.	.	.	.				PLATE SUBASSEMBLY, MK-7 pylon electrical	1	FR	
-54	AN365-632	.	.	.	.				NUT	2	FR	
-55	2W18-6L	.	.	.	.				WASHER, Flat (NA) (89372)	4	FR	
-56	AN515-6R18	.	.	.	.				SCREW	2	FR	
-57	NAS43DD1-24	.	.	.	.				SPACER	2	FR	
-58	NAS43DD1-18	.	.	.	.				SPACER	2	FR	
-59	209-540141-17	.	.	.	.				STOP, MK-7 pylon electrical plate assembly	1	FR	
-60	209-540141-15	.	.	.	.				RETAINER, MK-7 pylon electrical plate assembly	1	FR	
-61	209-540141-13	.	.	.	.				PAD, MK-7 pylon electrical plate assembly (make from synthetic sponge rubber)	1	FR	
-62	NAS705T2	.	.	.		.			TERMINAL	2	FR	
-63	209-540142	.	.	.					BASE ASSEMBLY, MK-7 pylon electrical	1	FR	

NOTE:
*1 Parts to be used on 209-540141 assembly only
*2 Parts to be used on 209-540140-21 assembly only
*3 Parts to be used on 209-540141 assembly only
*4 Parts to be used on 209-540141-41 assembly only

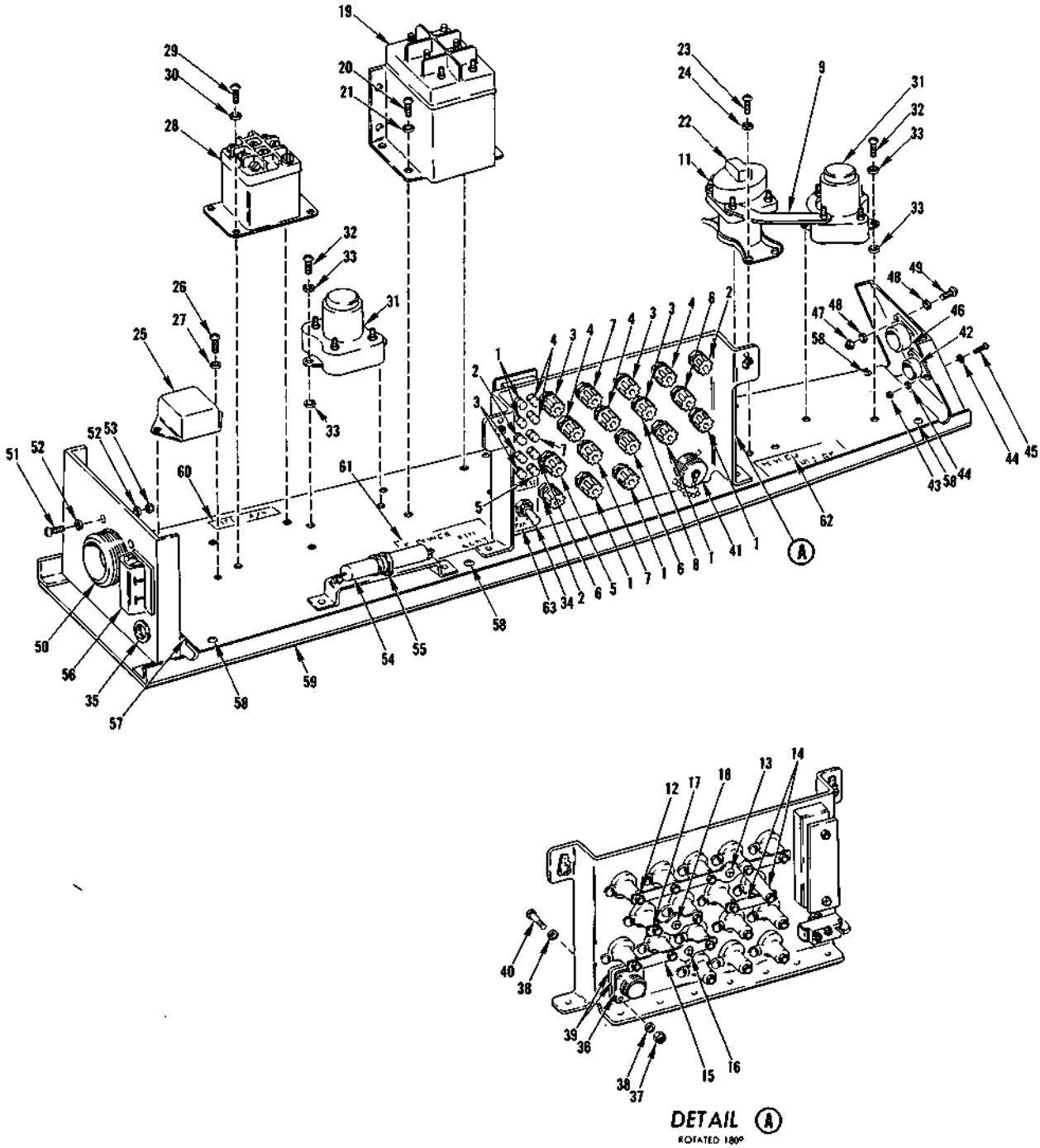

FIGURE 287A - MK-7 PYLON ELECTRICAL EQUIPMENT ASSEMBLY - APPLICABLE TO AIRCRAFT CODED (FR)

MK-7 PYLON ELECTRICAL EQUIPMENT ASSEMBLY - APPLICABLE TO AIRCRAFT CODED (FR)

FIGURE & INDEX NO.	PART NUMBER	1	2	3	4	5	6	7	NOMENCLATURE	UNITS PER ASSY.	USABLE ON CODE	S/C NO.
287A	209-63202-31	*1	PACKAGE, Provision for external stores (see Armament for additional breakdown)							1	FR	537
	209-63202-131		PACKAGE, Provision for external stores (see Armament for additional breakdown)							1	FR	
	209-63313	*1	.	MK-7 PYLON, For external stores BL 105 (see Armament for additional breakdown)						1	FR	537
	209-63313-31		.	MK-7 PYLON, For external stores BL 105 (see Armament for additional breakdown)						1	FR	
	244-54068		.	.	ELECTRICAL EQUIPMENT ASSEMBLY, MK-7 pylon (component part of 209-63313-31 MK-7 pylon) (see Armament)					1	FR	
-1	MS90079-2-1		.	.	.	FUSE (3A)				6	FR	
-2	MS90079-3-1		.	.	.	FUSE (5A)				3	FR	
-3	MS90079-7-1		.	.	.	FUSE (15A)				5	FR	
-4	MS90079-8-1		.	.	.	FUSE (20A)				5	FR	
-5	MS90079-9-1		.	.	.	FUSE (30A)				2	FR	
-6	MS90079-26-1		.	.	.	FUSE (15A) slow blow				3	FR	
-7	MDF-25		.	.	.	FUSE (25A) (BUS) (71400)				3	FR	
-8	300-A		.	.	.	FUSE HOLDER (FUSE) (84613)				17	FR	
-9	244-54036		.	.	.	BAR, Bus electrical T-208 electrical R1 and R2 to power relay				1	FR	
-10	244-54037		.	.	.	BAR, Bus electrical T-208 electrical R1 and R2 relay				1	FR	
-11	209-540146-5		.	.	.	BAR, Bus electrical MK-7 pylon				1	FR	
-12	209-540147-3		.	.	.	BAR, Bus electrical MK-7 pylon electrical fuses				1	FR	
	ATTACHING PARTS											
-13	AN365-1032		.	.	.	NUT				1	FR	
	2W1AL-14-14-16		.	.	.	WASHER, Plain (NA) (89372)				2	FR	
	AN520-10R8		.	.	.	SCREW				1	FR	
	---*---											
-14	209-540147-7		.	.	.	BAR, Bus electrical MK-7 pylon electrical fuses				2	FR	
-15	209-540147-9		.	.	.	BAR, Bus electrical MK-7 pylon electrical fuses				1	FR	
	ATTACHING PARTS											
-16	AN365-1032		.	.	.	NUT				1	FR	
	2W1AL-14-14-16		.	.	.	WASHER, Plain (NA) (89372)				2	FR	
	AN520-10R8		.	.	.	SCREW				1	FR	
	---*---											
-17	209-540147-13		.	.	.	BAR, Bus electrical MK-7 pylon electrical fuses				1	FR	
	ATTACHING PARTS											
-18	AN365-1032		.	.	.	NUT				1	FR	
	2W1AL-14-14-16		.	.	.	WASHER, Plain (NA) (89372)				2	FR	
	AN520-10R8		.	.	.	SCREW				1	FR	
	---*---											
-19	6042H58		.	.	.	RELAY, Class B (CUT) (15605)				1	FR	
	ATTACHING PARTS											
-20	AN515-8R8		.	.	.	SCREW				4	FR	
-21	2W18-8L		.	.	.	WASHER, Flat (NA) (89372)				4	FR	
	---*---											
-22	7064-4513		.	.	.	RELAY, Unsealed aircraft electric (LR) (35344)				1	FR	
	ATTACHING PARTS											
-23	AN515-8R8		.	.	.	SCREW				4	FR	
-24	2W18-8L		.	.	.	WASHER, Flat (NA) (89372)				4	FR	
	---*---											
-25	9229-4629		.	.	.	RELAY (LR) (35344)				1	FR	
	ATTACHING PARTS											
-26	AN515-6R8		.	.	.	SCREW				2	FR	
-27	2W18-6L		.	.	.	WASHER, Flat (NA) (89372)				2	FR	
	---*---											
-28	9330-4106		.	.	.	RELAY, Hermetically sealed (LR) (35344)				1	FR	
	ATTACHING PARTS											
-29	AN515-8R8		.	.	.	SCREW				4	FR	
-30	2W18-8L		.	.	.	WASHER, Flat (NA) (89372)				4	FR	
	---*---											
-31	MS24181D1		.	.	.	RELAY				2	FR	
	ATTACHING PARTS											
-32	AN520-8R8		.	.	.	SCREW				4	FR	
-33	2W18-8L		.	.	.	WASHER, Flat (NA) (89372)				8	FR	
	---*---											
-34	AN3027-7		.	.	.	SWITCH				1	FR	
-35	294189-6B		.	.	.	GROMMET (MKL) (76530)				1	FR	
-36	MS3103H-16-95		.	.	.	CONNECTOR				1	FR	
	ATTACHING PARTS											
-37	AN365-440		.	.	.	NUT				4	FR	
-38	2W18-4L		.	.	.	WASHER, Flat (NA) (89372)				8	FR	
-39	244-54093		.	.	.	SHIM, Electrical MK-7 pylon				2	FR	
-40	AN515-4R10		.	.	.	SCREW				4	FR	
	---*---											
-41	MS25043-16C		.	.	.	DUST COVER				1	FR	
-42	MS3103H-28-21P		.	.	.	CONNECTOR				1	FR	
	ATTACHING PARTS											
-43	AN365-832		.	.	.	NUT				4	FR	
-44	2W18-6L		.	.	.	WASHER, Flat (NA) (89372)				8	FR	
-45	AN515-6R8		.	.	.	SCREW				4	FR	
	---*---											
-46	MS3103H-32-6P		.	.	.	CONNECTOR				1	FR	
	ATTACHING PARTS											
-47	AN365-832		.	.	.	NUT				4	FR	
-48	2W18-8L		.	.	.	WASHER, Flat (NA) (89372)				8	FR	

MK-7 PYLON ELECTRICAL EQUIPMENT ASSEMBLY - APPLICABLE TO AIRCRAFT CODED (FR)

FIGURE & INDEX NO.	PART NUMBER	1	2	3	4	5	6	7	NOMENCLATURE	UNITS PER ASSY.	USABLE ON CODE	S/C NO.
287A-49	AN515-8R8	.	.	.					SCREW	4	FR	
	---*---											
-50	MS3103H-36-7S	.	.	.					CONNECTOR	1	FR	
	ATTACHING PARTS											
-51	AN365-832	.	.	.					NUT	4	FR	
-52	2W18-8L	.	.	.					WASHER, Flat (NA) (89372)	8	FR	
-53	AN515-8R8	.	.	.					SCREW	4	FR	
	---*---											
-54	29F476	.	.	.					CONDENSOR (GE) (95412)	1	FR	
	ATTACHING PARTS											
-55	MS21919WDG6	.	.	.					CLAMP	1	FR	
	AN520-10R8	.	.	.					SCREW	1	FR	
	2W18-10M	.	.	.					WASHER, Flat (NA) (89372)	1	FR	
	---*---											
-56	AN3436-1-2	.	.	.					TERMINAL BLOCK	1	FR	
	AN3434-1	.	.	.					TERMINAL STRIP	2	FR	
	5S7-3-3-1-2	.	.	.					INSULATING STRIP (NA) (89372)	1	FR	
	397-2	.	.	.					CAP (HEGE) (94640)	1	FR	
	AN365-440	.	.	.					NUT	2	FR	
	2W18-4L	.	.	.					WASHER, Flat (NA) (89372)	2	FR	
	AN341-6	.	.	.					WASHER	2	FR	
	AN961-6	.	.	.					WASHER	2	FR	
	AN936-A6B	.	.	.					WASHER	2	FR	
-57	244-54081	.	.	.					PLATE ASSEMBLY, MK-7 pylon electrical	1	FR	
	ATTACHING PARTS											
-58	AN520-10R8	.	.	.					SCREW	6	FR	
	2W18-10M	.	.	.					WASHER, Flat (NA) (89372)	6	FR	
	---*---											
-59	209-340142-101	.	.	.					BASE ASSEMBLY, MK-7 pylon electrical	1	FR	
-60	244-54078-3	.	.						DECAL, Electrical nomenclature	1	FR	
-61	244-54078-5	.	.						DECAL, Electrical nomenclature	1	FR	
-62	244-54078-7	.	.						DECAL, Electrical nomenclature	1	FR	
-63	244-54038-3	.	.						PLATE, Electrical nomenclature	1	FR	

NOTE: *1 Package 209-63202-31 reidentified as 209-63202-131 and pylon 209-63313 reidentified 209-63313-31 when Service Change No. 537 is incorporated

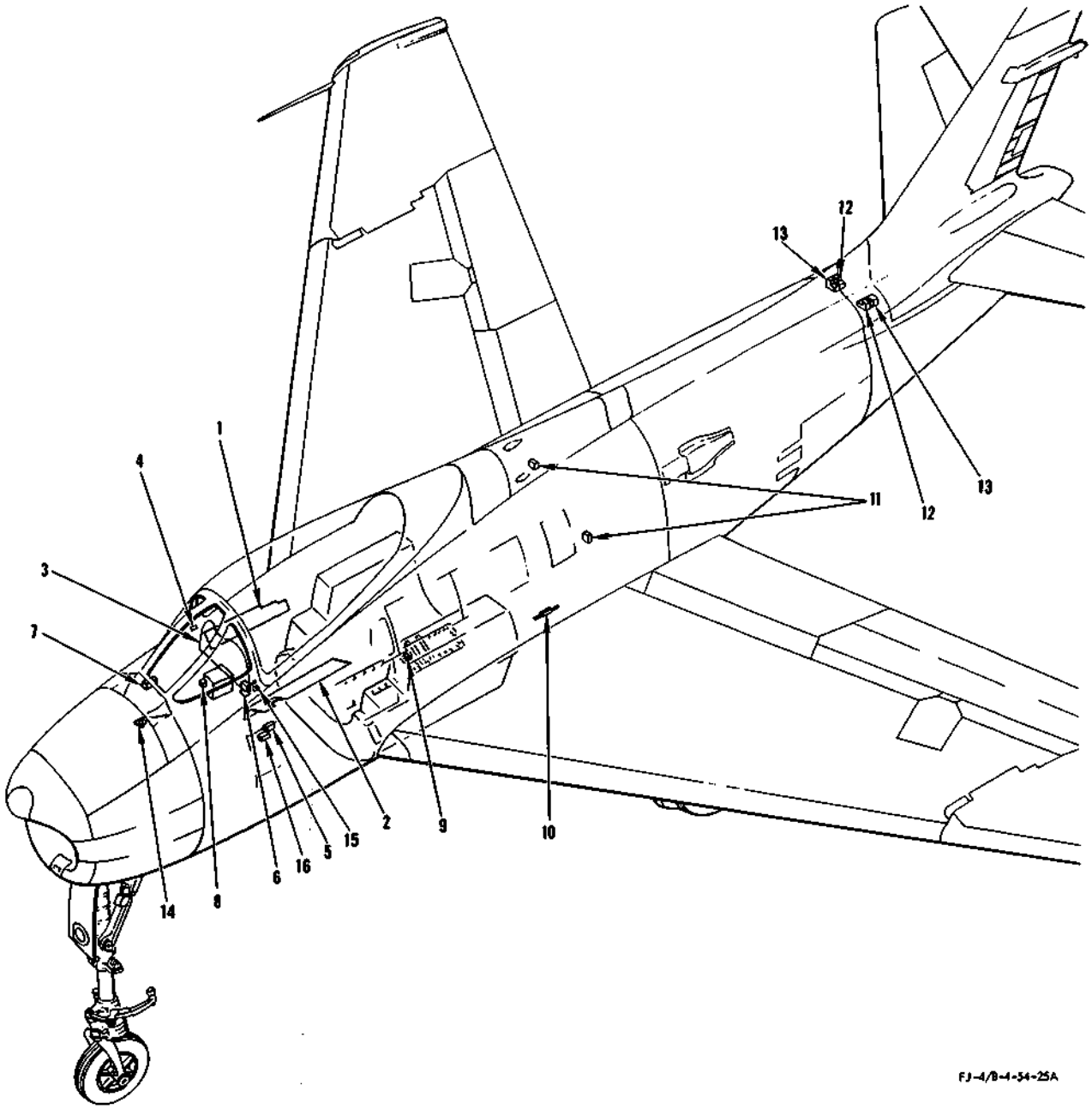

FIGURE 288 - WARNING LIGHT DIMMING SYSTEM

FIGURE & INDEX NO.	PART NUMBER	1	2	3	4	5	6	7	NOMENCLATURE	UNITS PER ASSY.	USABLE ON CODE	S/C NO.
288-1	209-54026								CONSOLE ASSEMBLY, RH forward (see figures 305 and 306 for complete breakdown)	1		
	90		.						CIRCUIT BREAKER (instrument lights) (MEH)	1	ET	
	MS25017-5		.						CIRCUIT BREAKER (instrument lights)	1	FR	
	90		.						CIRCUIT BREAKER (warning light test and rudder pedal shaker) (MEH)	1	ET	
	MS25017-5		.						CIRCUIT BREAKER (warning light test and rudder pedal shaker)	1	FR	
	CM11029		.						RESISTOR, Variable (instrument light rheostat) (CLR)	1		
	181-540102-3		.						CAP ASSEMBLY, Warning light (instrument power off)	1	U	
	204		.						BASE (instrument power off) (KOR)	1	U	
	AN3121-313		.						LAMP	2	U	
	209-54184-3		.						CAP ASSEMBLY, Warning light (generator out)	1	V	
	204AE		.						BASE (instrument power off) (KOR)	1	V	
	AN3121-313		.						LAMP	2	V	
	181-540102-17		.						CAP ASSEMBLY, Warning light (generator out)	1	U	
	204		.						BASE (generator out) (KOR)	1	U	
	AN3121-313		.						LAMP	2	U	
	209-54184-17		.						CAP ASSEMBLY, Warning light (generator out)	1	V	
	204AB		.						BASE (generator out) (KOR)	1	V	
	AN3121-313		.						LAMP	2	V	
	14PB1		.						SWITCH (warning light test) (MCS)	1		

WARNING LIGHT DIMMING SYSTEM

FIGURE & INDEX NO.	PART NUMBER	1 2 3 4 5 6 7 NOMENCLATURE	UNITS PER ASSY.	USABLE ON CODE	S/C NO.
288-2	209-54115	CONSOLE ASSEMBLY, LH forward (see figures 300 and 301 for complete breakdown)	1		
	91	. CIRCUIT BREAKER (alternate trim and manual fuel control) (MEH)	1	ET	
	MS25017-10	. CIRCUIT BREAKER (alternate trim and manual fuel control)	1	FR	
	AN3021-3	. SWITCH (engine manual fuel control)	1		
-3	209-51005	PANEL ASSEMBLY, Pilots instrument complete (see figures 315 and 317 for complete breakdown)	1		
	209-510108	PANEL ASSEMBLY, Pilots instrument complete (see figure 318 for breakdown)	1		
	181-54102-39	. CAP ASSEMBLY, Warning light (flight control pressure)	1	U	
	204	. BASE (flight control pressure) (KOR)	1	U	
	AN3121-313	. LAMP	2	U	
	209-54184-39	. CAP ASSEMBLY, Warning light (flight control pressure)	1	V	
	204AC	. BASE (flight control pressure) (KOR)	1	V	
	AN3121-313	. LAMP	2	V	
	181-540102-33	. CAP ASSEMBLY, Warning light (wing fuel shutoff)	1	U	
	204	. BASE (wing fuel shutoff) (KOR)	1	U	
	AN3121-313	. LAMP	2	U	
	209-54184-33	. CAP ASSEMBLY, Warning light (wing fuel shutoff)	1	GA	
	204AJ	. BASE (wing fuel shutoff) (KOR)	1	GA	
	AN3121-313	. LAMP	2	GA	
	181-540102-13	. CAP ASSEMBLY, Warning light (windshield anti-ice overheat)	1	U	
	204	. BASE (windshield anti-ice overheat) (KOR)	1	U	
	AN3121-313	. LAMP	2	U	
	209-54184-13	. CAP ASSEMBLY, Warning light (windshield anti-ice overheat) (KOR)	1	V	
	204AG	. BASE (windshield anti-ice overheat) (KOR)	1	V	
	AN3121-313	. LAMP	2	V	
	181-540102-15	. CAP ASSEMBLY, Warning light (low fuel)	1	U	
	204	. BASE (low fuel) (KOR)	1	U	
	AN3121-313	. LAMP	2	U	
	209-54184-15	. CAP ASSEMBLY, Warning light (low fuel)	1	V	
	209AD	. BASE (low fuel) (KOR)	1	V	
	AN3121-313	. LAMP	2	V	
	209-54184-41	. CAP ASSEMBLY, Warning light (manual fuel control)	1	FR	
	204AM	. BASE (manual fuel control) (KOR)	1	FR	
	AN3121-313	. LAMP	2	FR	
-4	181-540102-25	CAP ASSEMBLY, Warning light (manual fuel control)	1	U	
	204	. BASE (manual fuel control) (KOR)	1	U	
	AN3121-313	. LAMP	2	U	
	209-54184-25	CAP ASSEMBLY, Warning light (manual fuel control)	1	GA	
	204AK	BASE (manual fuel control) (KOR)	1	GA	
	AN3121-313	LAMP	2	GA	
-5	Model 57	CONTROL UNIT (warning light dimming) (PRJ) (interchangeable with D-8545-1 (GMC))	1		
	ATTACHING PARTS				
	AN515-8R8	SCREW	4		
	2W18-8M	WASHER, Flat (NA)	8		
	AN365-832	NUT	4		
	---*---				
-6	10682A-200	SWITCH (landing gear control) (CARM)	1		
	ATTACHING PARTS				
	7S13CN832-8A	SCREW, 100° flush head corrosion-resistant (NA)	4		
	---*---				
-7	650-1795	RELAY (inverter failure) (COE)	1		
	ATTACHING PARTS				
	AN520-10R8	SCREW	2		
	2W18-10M	WASHER, Flat (NA)	2		
	---*---				
	209-54226	SHIELD ASSEMBLY, Center electrical pedestal complete (see figure 295 for complete breakdown)	1		
-8	AN3310-2	. RELAY (bus control) (supersedes AN3310-1 for future procurement) (AN3310-1 not to be used for replacement on any aircraft)	1		
-9	209-51054-5	SWITCH ASSEMBLY, Instrument fuel pump control interlock float	1	CJ	
	209-51054-17	SWITCH ASSEMBLY, Instrument fuel pump control interlock float	1	LQ	
	209-51054-27	SWITCH ASSEMBLY, Instrument fuel pump control interlock float	1	MD	
	F21065-2X	. SWITCH, Fuel pump control (RCO) (supersedes F21065 and F21035-2 (RCO) - for future procurement)	1		
-10	30-037	VALVE (wing tank transfer) (HOA) (for breakdown see Technical Manual NA 03-10ABB-632) (see Fuel System)	1	ET	
-11	90000-2	SWITCH, Hydraulic pressure No. 1 (HYRM) (interchangeable with 106130-3 (LADM) or 4000-24 (Frebank Co)) (see Hydraulic System)	2	ET	
-12	90000-2	SWITCH, Hydraulic pressure No. 2 (HYRM) (interchangeable with 106130-3 (LADM) or 4000-24 (Frebank Co)) (used on 209-58664-3) (see Hydraulic System)	2	FR	
-13	90000-12	SWITCH, Hydraulic pressure No. 2 (HYRM) (interchangeable with 2170-2 (Frebank Co) or 106130-9 (LADM) (used on 209-58664-5) (see Hydraulic System)	2	FR	
-14	18423-0-300	THERMOSWITCH, Aircraft heater type (FEN) (windshield overheat detector) (see Heat and Vent System)	1		
-15	A3074R	LIGHT ASSEMBLY (oxygen low level warning and test) (RHS)	1	BS	
-16	9220	RELAY (low level oxygen warning light dimming) (LR)	1	FR	
	RW20G501	RESISTOR (low level oxygen warning light dimming) (MIL-R-26/8)	1	FR	

NOTE: The above information has been compiled from 209-54002 page 98 (C change)

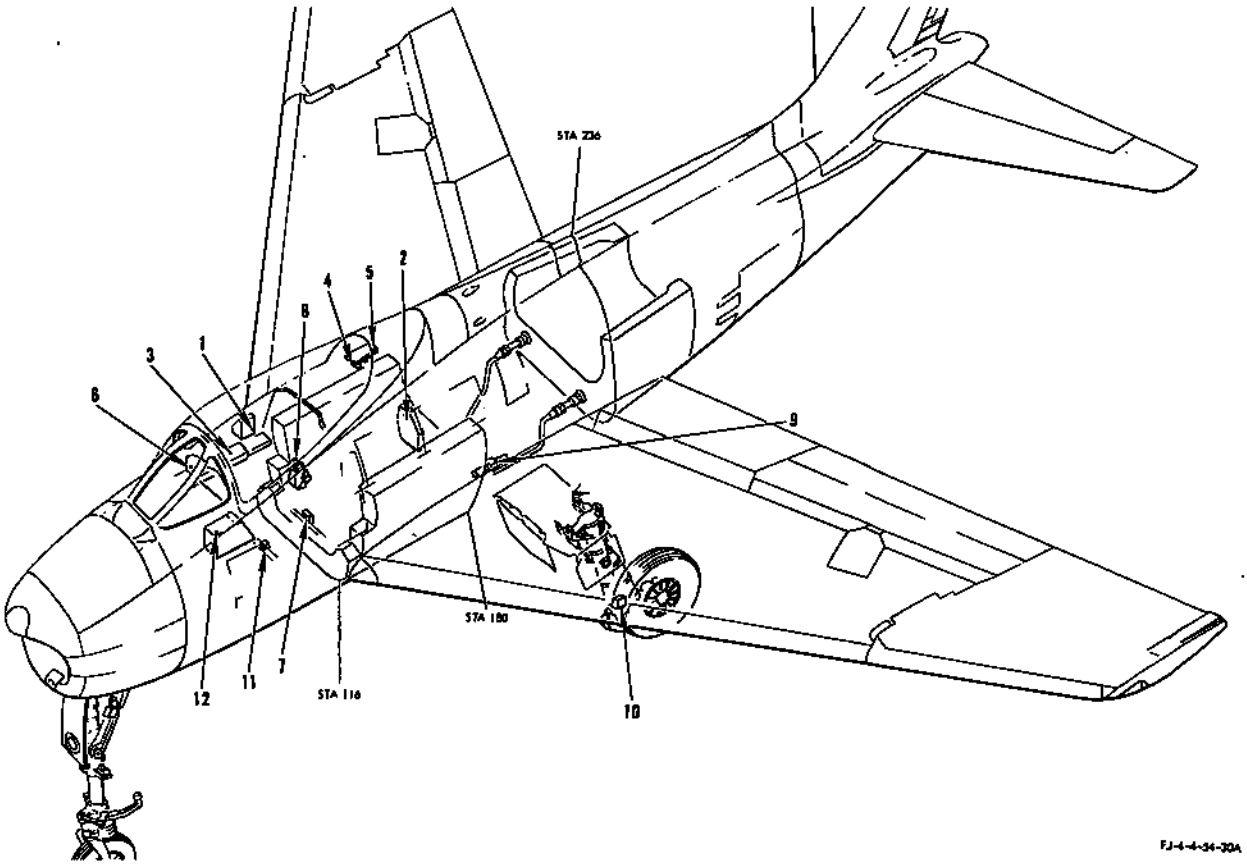

FIGURE 291 - WING TANK FUEL DUMP - APPLICABLE TO AIRCRAFT CODED (ET)

FIGURE & INDEX NO.	PART NUMBER	1 2 3 4 5 6 7 NOMENCLATURE	UNITS PER ASSY.	USABLE ON CODE	S/C NO.
291	209-54189	PANEL ASSEMBLY, Circuit breaker and fuse cockpit RH rear complete (see figure 314 for complete breakdown)	1		
-1	91	. CIRCUIT BREAKER (utility receptacle and fuel dump) (MEH) (76374)	1	ET	466
	209-54170	PANEL ASSEMBLY, Circuit breaker station 156 LH side complete (see figure 303 for complete breakdown)	1		
-2	90	. CIRCUIT BREAKER (ground safety) (MEH) (76374)	1	ET	
	209-54026	CONSOLE ASSEMBLY, RH forward (see figure 305 for complete breakdown)	1		
-3	14PB1	. SWITCH (warning light test) (MCS) (91929)	1	ET	
	209-54101	PANEL ASSEMBLY, Canopy deck relay complete (see figure 299 for complete breakdown)	1		
-4	9220-PM	. RELAY (ground safety No. 1) (LR) (35344)	1	ET	
-5	AN3310-2	. RELAY (ground safety No. 2) (supersedes AN3310-1 for future procurement) (AN3310-1 not to be used for replacement on any aircraft)	1	ET	
	209-51005	PANEL ASSEMBLY, Pilots instrument complete (see figure 315 for complete breakdown)	1		
-6	181-540102-33	. CAP ASSEMBLY, Warning light (wing fuel shutoff)	1	U	466
	204	. BASE (KOR) (81590)	1	U	466
	AN3121-313	. LAMP	2	U	466
	209-54184-33	. CAP ASSEMBLY, Warning light (wing fuel shutoff)	1	GA	466
	204AJ	. BASE (KOR) (81590)	1	GA	466
	AN3121-313	. LAMP	2	GA	466
-7	4-354-1	VALVE (wing tank dump air solenoid) (SZT) (82267) (see Fuel System)	1	K	
-8	110085	VALVE (wing tank fuel vent) (WTR) (79318) (see Fuel System) (for breakdown see Technical Manual NA 03-30EB-583)	1	K	
-9	30-037	VALVE (wing tank transfer) (HOA) (81982) (see Fuel System) (for breakdown see Technical Manual NA 03-10ABB-632)	1	ET	466
-10	209-54820	SWITCH ASSEMBLY, Main landing gear ground safety (see figure 259 for breakdown)	1	ET	
-11	Model 57	CONTROL UNIT, Warning light dimming (Production Research Co.) (98468) (interchangeable with D-8545-1 (GMC) (72914))	1	ET	
	ATTACHING PARTS				
	AN515-8R8	SCREW	4	ET	
	2W18-8M	WASHER, Flat (NA) (89372)	8	ET	
	AN365-832	NUT	4	ET	
	---*---				
	209-54226	SHIELD ASSEMBLY, Center electric pedestal complete (see figure 295 for complete breakdown)	1		
-12	AN3210-1	. SWITCH (wing fuel dump)	1	ET	466

NOTE: The above information has been compiled from 209-54002, Page 91 (H change)

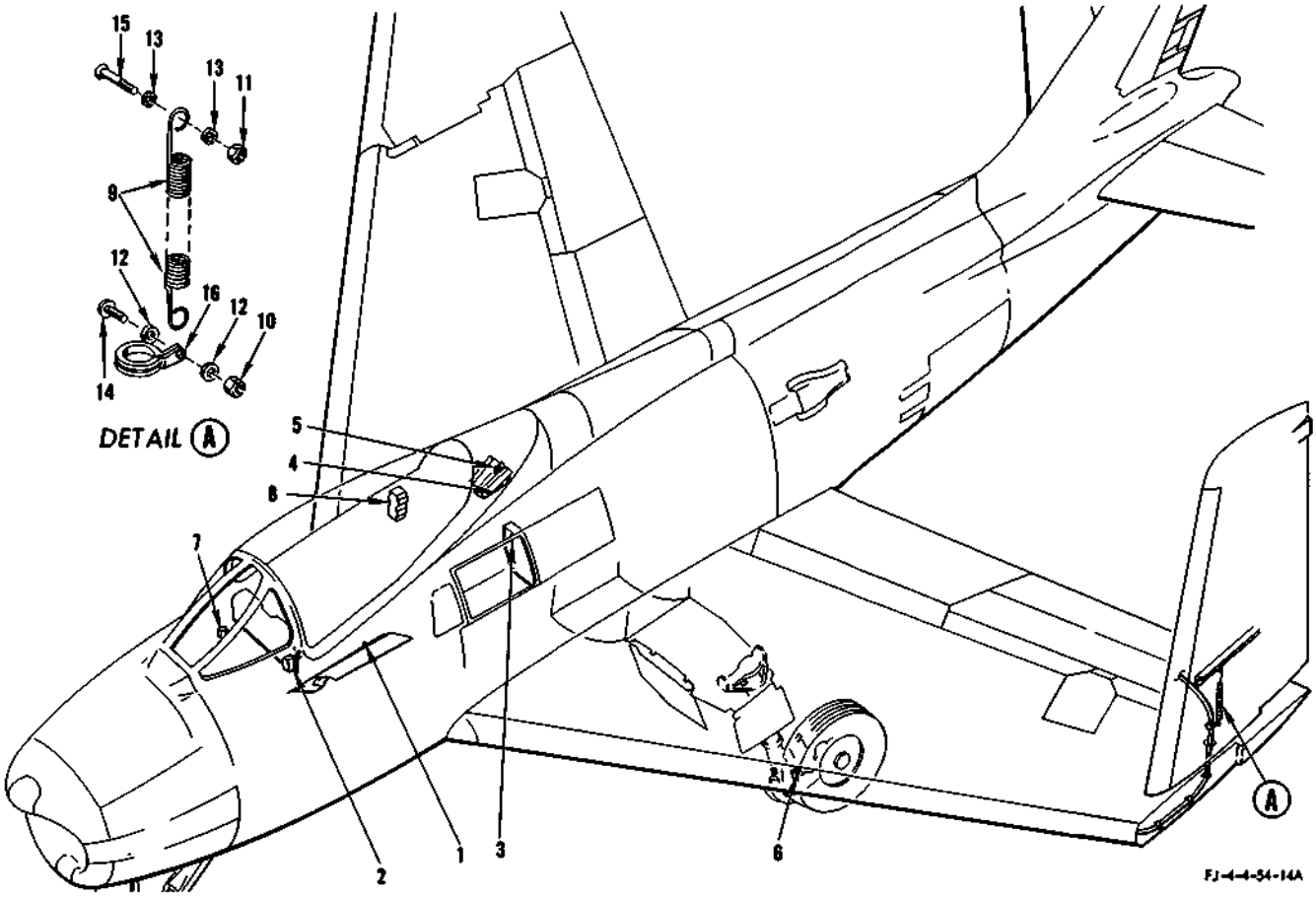

FIGURE 292 - WINGFOLD

FIGURE & INDEX NO.	PART NUMBER	1 2 3 4 5 6 7 NOMENCLATURE	UNITS PER ASSY.	USABLE ON CODE	S/C NO.
292	209-54115	CONSOLE ASSEMBLY, LH forward (see figures 300 and 301 for complete breakdown)	1		
-1	91	. CIRCUIT BREAKER (landing gear control and wingfold control) (MEH) (76374)	1	ET	
	MS25017-10	. CIRCUIT BREAKER (landing gear and wingfold)	1	FR	
-2	10682A-200	SWITCH (landing gear control) (CARM) (81839)	1		
	7S13CN832-8A	SCREW, 100° flush head corrosion-resistant steel (NA) (89372)	4		
-3	209-54170	PANEL ASSEMBLY, Circuit breaker station 156 LH side (see figure 303 for complete breakdown)	1		
	209-540110	PANEL ASSEMBLY, Circuit breaker station 156 LH side (see figure 304 for complete breakdown)	1		
	90	. CIRCUIT BREAKER (ground safety) (MEH) (76374)	1	ET	
	MS25017-5	. CIRCUIT BREAKER (ground safety)	1	HJ	
	MS25017-5	. CIRCUIT BREAKER (ground safety and overvoltage)	1	FL	
	209-54101	PANEL ASSEMBLY, Canopy deck relay complete (see figure 299 for complete breakdown)	1		
-4	9220-PM	. RELAY (ground safety No. 1) (LR) (35344)	1		
-5	AN3310-1	. RELAY (ground safety No. 2) (superseded by AN3310-2 for future procurement) (AN3310-1 not to be used for replacement on any aircraft)	1	LE	
	AN3310-2	. RELAY (ground safety No. 2) (supersedes AN3310-1 for future procurement)	1	KY	
-6		MAIN LANDING GEAR GROUND SAFETY SWITCH ASSEMBLY LINKAGE AND ATTACHING PARTS (see figure 259 for complete breakdown)			
-7	AN3022-3	SWITCH (wingfold selector)	1		

WINGFOLD

FIGURE & INDEX NO.	PART NUMBER	1 2 3 4 5 6 7 NOMENCLATURE	UNITS PER ASSY.	USABLE ON CODE
292	ATTACHING PARTS			
	AN515-6R6	SCREW	2	
	2W18-6L	WASHER, Flat (NA) (89372)	2	
	---*---			
-8	11070	VALVE ASSEMBLY, Solenoid selector (wingfold) (MVEM) (93724) (interchangeable with 12000 (BTP) (82106) (for breakdown of 11070 (MVEM) (93724) see Technical Manual NA 03-30EX-504) (see Hydraulic System)	1	
-9	209-54316	SPRING, Tension	1	ES
	209-540138	SPRING, Tension	1	FR
	ATTACHING PARTS			
-10	AN365-1032	NUT	1	BY
-11	AN364-428	NUT	1	BY
-12	2W18-10M	WASHER, Flat (NA) (89372)	2	BY
-13	2W18-416	WASHER, Flat (NA) (89372)	2	BY
-14	AN520-10R10	BOLT	1	ES
	AN520-10R10	BOLT (LH only)	1	FR
	AN520-10R7	BOLT (RH only)	1	FR
-15	NAS334CPA7-5	BOLT	1	BY
	---*---			
-16	MS21919WDG9	CLAMP (LH only)	1	BY
	MS21919WDG7	CLAMP (RH only)	1	BY

NOTE: The above information has been compiled from 209-54002, Page 61 (E change)

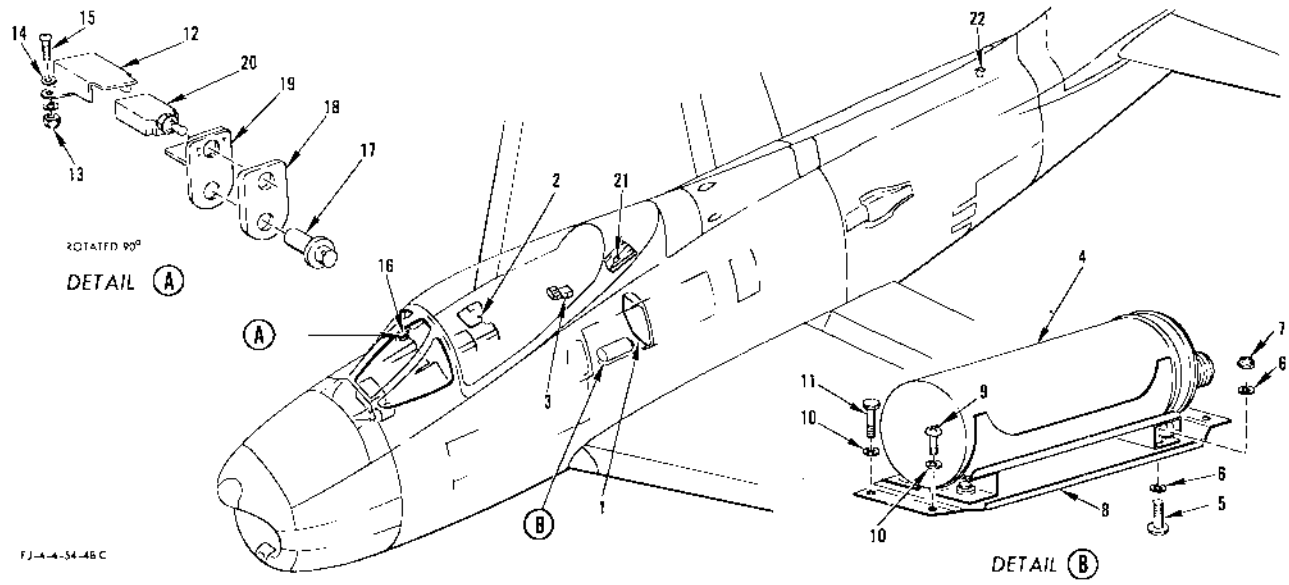

FIGURE 293 - YAW DAMPER - APPLICABLE TO AIRCRAFT CODED (ET)

FIGURE & INDEX NO.	PART NUMBER	1 2 3 4 5 6 7 NOMENCLATURE	UNITS PER ASSY.	USABLE ON CODE	S/C NO.
293-1	209-54170	PANEL ASSEMBLY, Circuit breaker station 156 LH side complete (see figure 303 for complete breakdown)	1		
	312001	. FUSE (yaw damper phase A) (LTF) (75915)	1	ET	
	312001	. FUSE (yaw damper phase C) (LTF) (75915)	1	ET	
	90	. CIRCUIT BREAKER (defuel and float test and yaw damper) (MEH) (76374)	1	FK	
-2	209-54189	PANEL ASSEMBLY, Circuit breaker and fuse cockpit RH rear complete (see figure 314 for complete breakdown)	1		
	312001	. FUSE (yaw damper phase A) (LTF) (75915)	1	LP	
	312001	. FUSE (yaw damper phase B) (LTF) (75915)	1	LP	
	312001	. FUSE (yaw damper phase C) (LTF) (75915)	1	LP	
-3	209-54163	COVER ASSEMBLY, RH radio compartment electrical junction box complete (see figure 308 for complete breakdown)	1		
	93	. CIRCUIT BREAKER (yaw damper servo) (MEH) (76374)	1	FK	
-4	15820-1-A	GYRO AMPLIFIER (yaw damper) (ECP) (19315) (interchangeable with 15820-1-B)-(ECP) (19315)) (superseded by 1500D-3 (LA) (35351) for future procurement) (for breakdown see Technical Manual NA 05-45D-502)	1	LP	
	1500D-3	GYRO AMPLIFIER (yaw damper) (LA) (35351) (supersedes 15820-1-A (ECP) (19315) and 15820-1-B (ECP) (19315) for future procurement)	1	LW	
	ATTACHING PARTS				
-5	AN520-10R14	SCREW	4	ET	
-6	2W18-10M	WASHER, Flat (NA) (89372)	8	ET	
-7	AN364-1032	NUT	4	ET	
		---*---			
-8	209-51189	PLATE ASSEMBLY, Gyro amplifier mounting LH radio bay	1	ET	
	ATTACHING PARTS				
-9	AN520-10R10	SCREW	2	ET	
-10	2W18-10M	WASHER, Flat (NA) (89372)	4	ET	
-11	AN3-4A	BOLT	2	ET	
		---*---			
-12	209-51142	COVER, Mach trim and yaw damper switch	1	ET	
	ATTACHING PARTS				
-13	AN365-632	NUT	2	ET	
-14	2W18-6L	WASHER, Flat (NA) (89372)	4	ET	
-15	AN515-6R18	SCREW	2	ET	
		---*---			
-16	209-51151-21	PANEL ASSEMBLY, Yaw damper switch	1	ET	
-17	MS25010-3	. LIGHT	1	ET	
-18	209-51140-3	. PLATE, Yaw damper identification	1	ET	
-19	209-51150	. BRACKET ASSEMBLY, Yaw damper switch mounting	1	ET	
-20	AN3021-3	. SWITCH (yaw damper)	1	ET	
	209-54101	PANEL ASSEMBLY, Canopy deck relay complete (see figure 299 for complete breakdown)	1		
-21	9220-PM	. RELAY (landing gear downlock (LR) (35344)	1	ET	
-22	209-54740	MOTOR ASSEMBLY (yaw damper servo) (supersedes 118AB (LA) (35351) for future procurement) (for breakdown of 118AB see Technical Manual AN 05-45EA-7) (see Surface and Secondary Controls)	1	FK	

NOTE: The above information has been compiled from 209-54002, Page 97.1 (B change) and Page 97.3 (A change)

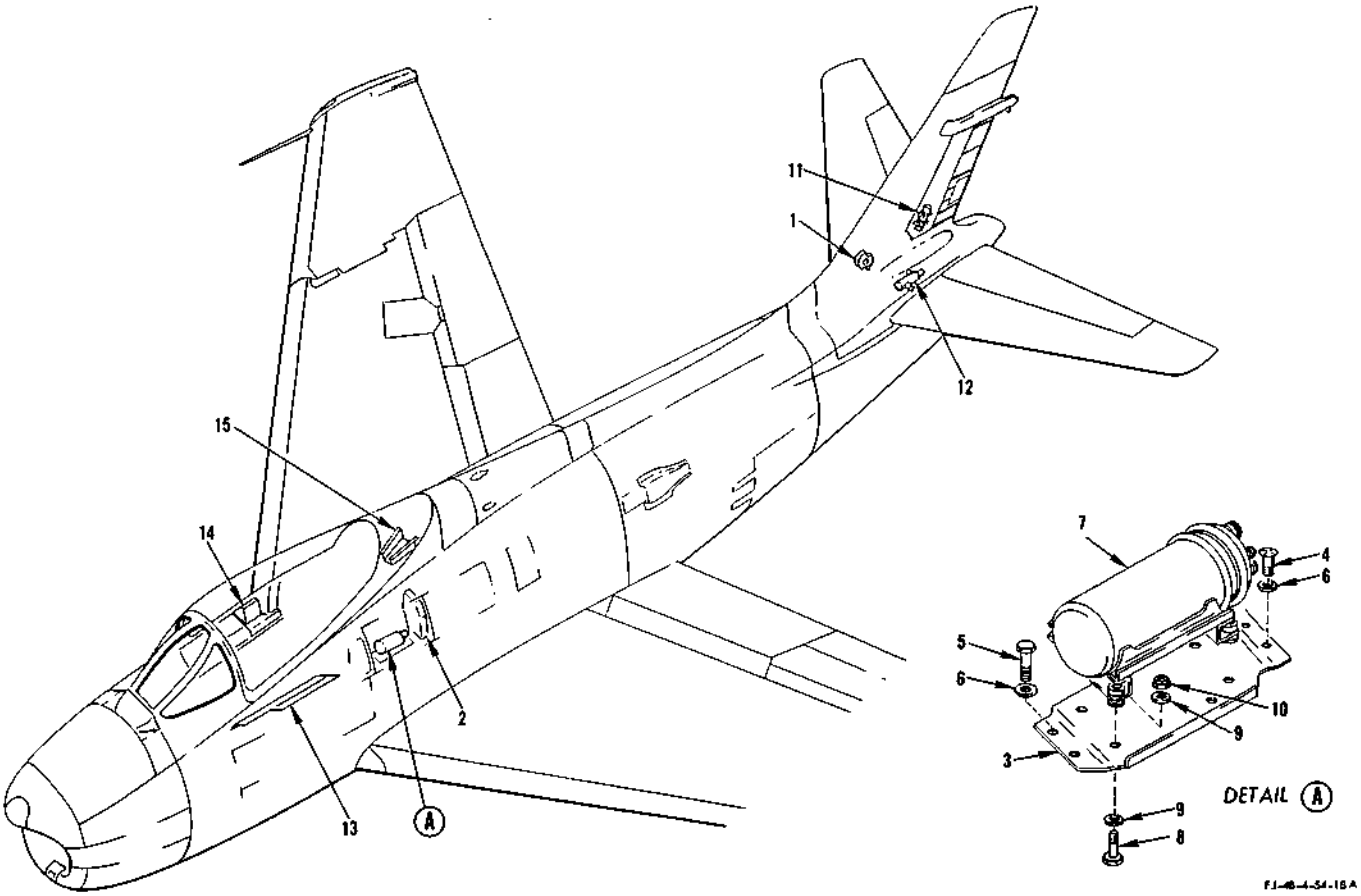

FIGURE 294 - YAW DAMPER - APPLICABLE TO AIRCRAFT CODED (FR)

FIGURE & INDEX NO.	PART NUMBER	1 2 3 4 5 6 7 NOMENCLATURE	UNITS PER ASSY.	USABLE ON CODE	S/C NO.
294-1	209-524171	TRANSDUCER ASSEMBLY, Rudder pedal force (see Surface and Secondary Controls	1	FR	
	85193A	. POTENTIOMETER (rudder pedal force transducer) (GIA) (72737)	1	FR	
-2	209-540110	PANEL ASSEMBLY, Circuit breaker station 156 LH (see figure 304 for complete breakdown)	1		
	MS25017-5	. CIRCUIT BREAKER (defuel and float test and yaw damper)	1	ML	
	MS25017-5	. CIRCUIT BREAKER (defuel and yaw damper)	1	LT	
	312001	. FUSE (yaw damper phase A) (LTF) (75915)	1	FR	
	312001	. FUSE (yaw damper phase C) (LTF) (75915)	1	FR	
-3	209-51189	PLATE, Gyro amplifier mounting radio bay assembly of	1	FR	
	ATTACHING PARTS				
-4	AN520-10R10	SCREW	2	FR	
-5	AN3-4A	BOLT	2	FR	
-6	2W18-10M	WASHER, Flat (NA) (89372)	4	FR	
	---*---				
-7	1500P	GYRO AMPLIFIER (yaw damper) (LA) (35351)	1	FR	491
	ATTACHING PARTS				
-8	AN3-7A	BOLT	4	FR	
-9	2W18-10M	WASHER, Flat (NA) (89372)	8	FR	
-10	AN365-1032	NUT	4	FR	
	---*---				
-11	476-2	SERVO UNIT, Rotary rudder boost (Gray and Hulegard, Inc.) (99447) (see Hydraulic System)	1	FR	491
-12	25036	VALVE, Hydraulic rudder boost control (AP) (00502) (for breakdown see Technical Manual NA 03-30CL-518) (see Hydraulic System)	1	FR	
-13	209-54115	CONSOLE ASSEMBLY, LH forward (see figure 301 for complete breakdown)	1		
	MS25028-8	SWITCH (rudder boost)	1	FR	
-14	209-54472	PANEL ASSEMBLY, Circuit breaker and fuse cockpit RH rear (see figure 319 for complete breakdown)	1		
	9T39Y5	. TRANSFORMER (26-volt instrument) (General Electric Co.) (95412) (interchangeable with and supersedes 70G175 (GEMI) (97424) for future procurement)	1	FR	
	9220-PM	RELAY (approach light dimming) (LR) (35344)	1	FR	
-15	209-54101	PANEL ASSEMBLY, Canopy deck relay complete (see figure 299 for complete breakdown)	1		
	9220-PM	. RELAY (landing gear downlock) (LR) (35344)	1	FR	

NOTE: The above information has been compiled from 209-54002, Page 97.2 (D change)

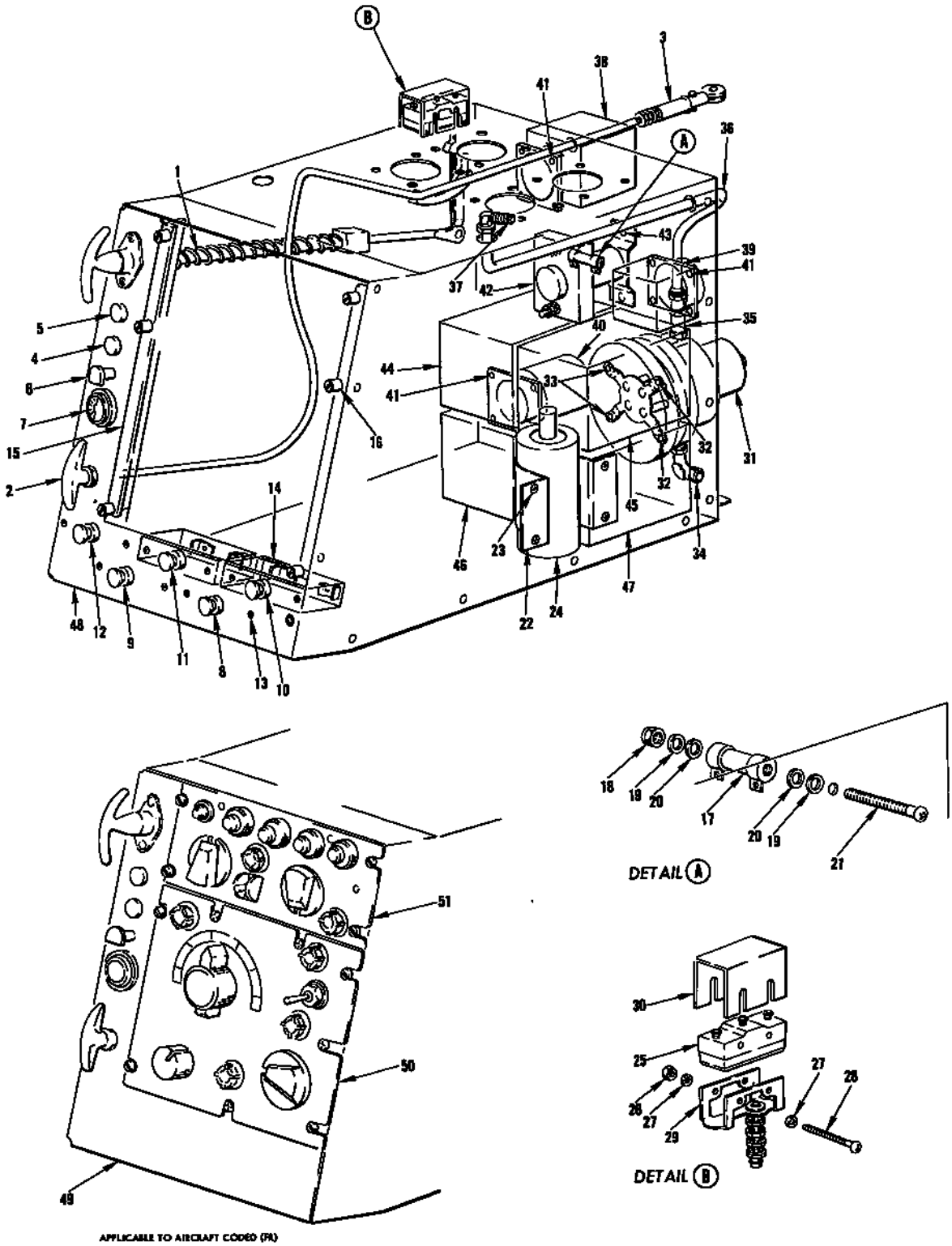

FIGURE 295 - CENTER PEDESTAL SHIELD ASSEMBLY

CENTER PEDESTAL SHIELD ASSEMBLY

FIGURE & INDEX NO.	PART NUMBER	1 2 3 4 5 6 7 NOMENCLATURE	UNITS PER ASSY.	USABLE ON CODE	S/C NO.
295	209-54226-201	SHIELD ASSEMBLY, Center electrical pedestal complete	1	FS	
	209-54226-301	SHIELD ASSEMBLY, Center electrical pedestal complete	1	Y	
	209-54226-401	SHIELD ASSEMBLY, Center electrical pedestal complete	1	KK	
	209-54226-411	SHIELD ASSEMBLY, Center electrical pedestal complete	1	KY	
	ATTACHING PARTS				
	AN520-10R8	SCREW	8		
	2W18-10M	WASHER, Flat (NA) (89372)	10		
	AN3-4A	BOLT	2		
	---*---				
-1		. WING FUEL DUMP HANDLE MECHANISM (see Surface and Secondary Controls)			
-2	C9398-206	. PUSH PULL ASSEMBLY (TEX) (78710)	1		
-3	C9397	. TELESCOPIC UNIT ASSEMBLY (TEX) (78710)	1		
-4	AN3249-2	. JACK (voltmeter test) (black)	1		
-5	AN3249-1	. JACK (voltmeter test) (red)	1		
	2W18-616L	. WASHER, Flat (NA) (89372)	2		
-6	A-6795-24	. LIGHT FIXTURE, Instrument (GMC) (72914)	1		
	AN961-416	. WASHER	1		
-7	A-SP-157	. METER (AFC-X-TAL current) (ININ) (81030)	1		
-8	90	. CIRCUIT BREAKER (camera and ammo boost control) (MEH) (76374)	1	ET	
-9	90	. CIRCUIT BREAKER (camera test and purge valve) (MEH) (76374)	1	ET	
-10	92	. CIRCUIT BREAKER (bomb and gun trigger) (MEH) (76374)	1	ET	
-11	90	. CIRCUIT BREAKER (gun charging) (MEH) (76374)	1	ET	
-12	90	. CIRCUIT BREAKER (armament bus control) (MEH) (76374)	1	ET	
	ATTACHING PARTS				
-13	AN515-6R6	. SCREW	10	ET	
	---*---				
-14	194-54059-19	. BAR, Electrical bus	1	ET	
-15	209-54053	. COVER ASSEMBLY, Center electrical pedestal	1	ET	
-16	PF3-1/2-38	. . STUD (DZ) (72794)	6	ET	
	PC3-1/2	. . CUP (DZ) (72794)	6	ET	
	PS3-1/2	. . SPRING (DZ) (72794)	6	ET	
-17	RW30F450	. RESISTOR	1		
-18	AN365-1032	. NUT	1		
-19	2W18-10M	. WASHER, Flat (NA) (89372)	2		
-20	2W1P14-14-31	. WASHER, Plain (NA) (89372)	2		
-21	AN520-10R24	. SCREW	1		
-22	209-54076	. BRACKET ASSEMBLY, Center electrical pedestal condenser	1		
	ATTACHING PARTS				
-23	AN520-10R7	. SCREW	4		
	2W18-10M	. WASHER, Flat (NA) (89372)	4		
	---*---				
-24	CP70B1EF106V	. CAPACITOR (MIL-C-25/7) (furnished with MK-II gunsight)	1		
-25	AN3210-1	. SWITCH (wing fuel dump)	1	ET	466
	ATTACHING PARTS				
-26	AN364-632	. NUT	2	ET	466
-27	2W18-6L	. WASHER, Flat (NA) (89372)	4	ET	466
-28	AN515-6R18	. SCREW	2	ET	466
	---*---				
-29	MC2711	. ACTUATOR (MCS) (91929)	1	ET	466
-30	209-54269	. COVER, Electrical switch pilots center pedestal	1	ET	466
-31	104200-2	. VALVE, Air pressure regulating and reducing (LADM) (91864) (for breakdown see Technical Manual NA 03-30EV-501)	1		
	ATTACHING PARTS				
-32	AN3-3A	. BOLT (RH side)	2		
	2W18-10M	. WASHER, Flat (NA) (89372) (RH side)	2		
-33	AN3-6A	. BOLT (LH side)	2		
	2W18-10M	. WASHER, Flat (NA) (89372) (LH side)	2		
	NAS43DD3-16	. SPACER (LH side)	2		
	---*---				
-34	AN833-5D	. ELBOW	1		
	AN6290-5	. GASKET	1		
	AN6291-5	. RING	1		
	AN6289D5	. NUT	1		
-35	AN832-4D	. UNION	1		
	AN6290-4	. GASKET	1		
	AN6291-4	. RING	1		
	AN6289D4	. NUT	1		
-36	181-51802-25	. TUBE ASSEMBLY, Pilots panel disconnect to pressure regulator	1		
-37	AN821-4D	. ELBOW	1		
-38	AN3310-2 *1	. RELAY (bus control)	1		
-39	AN3310-2 *1	. RELAY (landing gear switch down)	1		
-40	AN3303-1	. RELAY (RMI indicator change-over)	1		
	ATTACHING PARTS				
-41	AN515-4R6	. SCREW	9		
	AN500A4-6	. SCREW	3		
	2W18-4L	. WASHER, Flat (NA) (89372)	24		
	AN365-440	. NUT	12		
	---*---				
-42	AN3350-2	. RELAY (armament master)	1		
	ATTACHING PARTS				
-43	AN3-3A	. BOLT	2		
	2W18-10M	. WASHER, Flat (NA) (89372)	2		
	---*---				

CENTER PEDESTAL SHIELD ASSEMBLY

FIGURE & INDEX NO.	PART NUMBER	1	2	3	4	5	6	7	NOMENCLATURE	UNITS PER ASSY.	USABLE ON CODE	S/C NO.
295-44	AN3311-2	.							RELAY (ground firing control)	1		
-45	AN3311-2	.							RELAY (gun firing)	1		
-46	AN3311-2	.							RELAY (stores and tank release)	1	ET	
	AN3311-2	.							RELAY (stores release)	1	FR	
-47	AN3311-2	.							RELAY (gun AC power)	1		
	ATTACHING PARTS											
	AN515-8R8	.							SCREW	8	LE	
	2W18-8L	.							WASHER, Flat (NA) (89372)	8	LE	
	AN515-8R8	.							SCREW	4	KY	
	2W18-8L	.							WASHER, Flat (NA) (89372)	12	KY	
	209-543147	.							SHIELD, Electrical center pedestal	1	KY	
	209-543221	.							SUPPORT, Electrical relay	4	KY	
	AN365-832	.							NUT	4	KY	
	---*---											
-48	209-54225-201	.							SHIELD ASSEMBLY, Center electrical pedestal	1	FS	
	209-54225-301	.							SHIELD ASSEMBLY, Center electrical pedestal	1	Y	
-49	209-54225-401	.							SHIELD ASSEMBLY, Center electrical pedestal	1	FR	
-50	G8890-1A	.							CONTROL BOX ASSEMBLY (bomb and rocket) (GMC) (72914) (supersedes G8890-1 (GMC) (72914) (superseded by G9515-1A (GMC) (72914) for future procurement)	1	KX	
	G9515-1A	.							CONTROL BOX ASSEMBLY (bomb and rocket) (GMC) (72914) (supersedes G9515-1 (GMC) (72914) and G8890-1A which superseded G8890-1 for future procurement)	1	KY	
-51	G7455A-1	.							CONTROL BOX ASSEMBLY (T-208) (GMC) (72914) (see figure 284 for complete breakdown)	1	FR	

NOTE: *1 AN3310-2 supersedes AN3310-1 for future procurement AN3310-1 not to be used for replacement on any aircraft

POWER DISTRIBUTION RELAY PANEL ASSEMBLY - APPLICABLE TO AIRCRAFT CODED (ET)

FIGURE & INDEX NO.	PART NUMBER	1 2 3 4 5 6 7	NOMENCLATURE	UNITS PER ASSY.	USABLE ON CODE	S/C NO.
297	209-54138		PANEL ASSEMBLY, Electrical power distribution relay	1	ET	
	ATTACHING PARTS					
-1	AN520-10R8		SCREW	8	ET	
-2	2W18-10M		WASHER, Flat (NA) (89372)	13	ET	
-3	AN365-1032		NUT	5	ET	
	---*---					
-4	AN341-616	.	NUT	5	ET	
-5	AN935B616	.	WASHER	5	ET	
-6	AN961-616	.	WASHER	8	ET	
-7	AN341-10	.	NUT	3	ET	
-8	AN935B10	.	WASHER	3	ET	
-9	AN961-10	.	WASHER	6	ET	
-10	2W1AL24-32-125	.	WASHER, Plain (NA) (89372)	2	ET	
-11	2W1AL24-34-125	.	WASHER, Plain (NA) (89372)	1	ET	
-12	AN6-7A	.	BOLT	2	ET	
	AN6-10A	.	BOLT	1	ET	
-13	2W1AL24-24-32	.	WASHER, Plain (NA) (89372)	2	ET	
-14	209-54073	.	BUS BAR ASSEMBLY, Electrical power distribution primary to canopy relay	1	ET	
-15	209-54080	.	BUS BAR ASSEMBLY, Electrical power distribution primary	1	ET	151
-16	209-54072	.	BUS BAR ASSEMBLY, Electrical power distribution canopy actuator relay	1	ET	
-17	181-54151	.	BUS BAR, Electrical LH power distribution box canopy and battery relay	1	ET	
-18	2W18-10M	.	WASHER, Flat (NA) (89372)	10	ET	
-19	AN520-10R8	.	SCREW	10	ET	151
-20	AN3025-2	.	CUTOUT (reverse current 28V dc)	1	ET	
-21	AN3370-2	.	RELAY (monitor bus)	1	ET	151
-22	AN3370-2	.	RELAY (secondary bus)	1	ET	
-23	AN3370-2	.	RELAY (battery bus)	1	ET	
-24	2W18-8L	.	WASHER, Flat (NA) (89372)	10	ET	
-25	AN515-8R7	.	SCREW	10	ET	
-26	AN3353-1	.	RELAY (canopy bus)	1	ET	
-27	AN3350-2	.	RELAY (canopy closed)	1	ET	
-28	AN3350-2	.	RELAY (canopy open)	1	ET	
-29	AN3312-2	.	RELAY.(starter shunt field) (AN3312-2 supersedes and is interchangeable with AN3312-1 for future procurement)	1	ET	
-30	209-54139	.	PANEL, Electrical power distribution relay	1	ET	

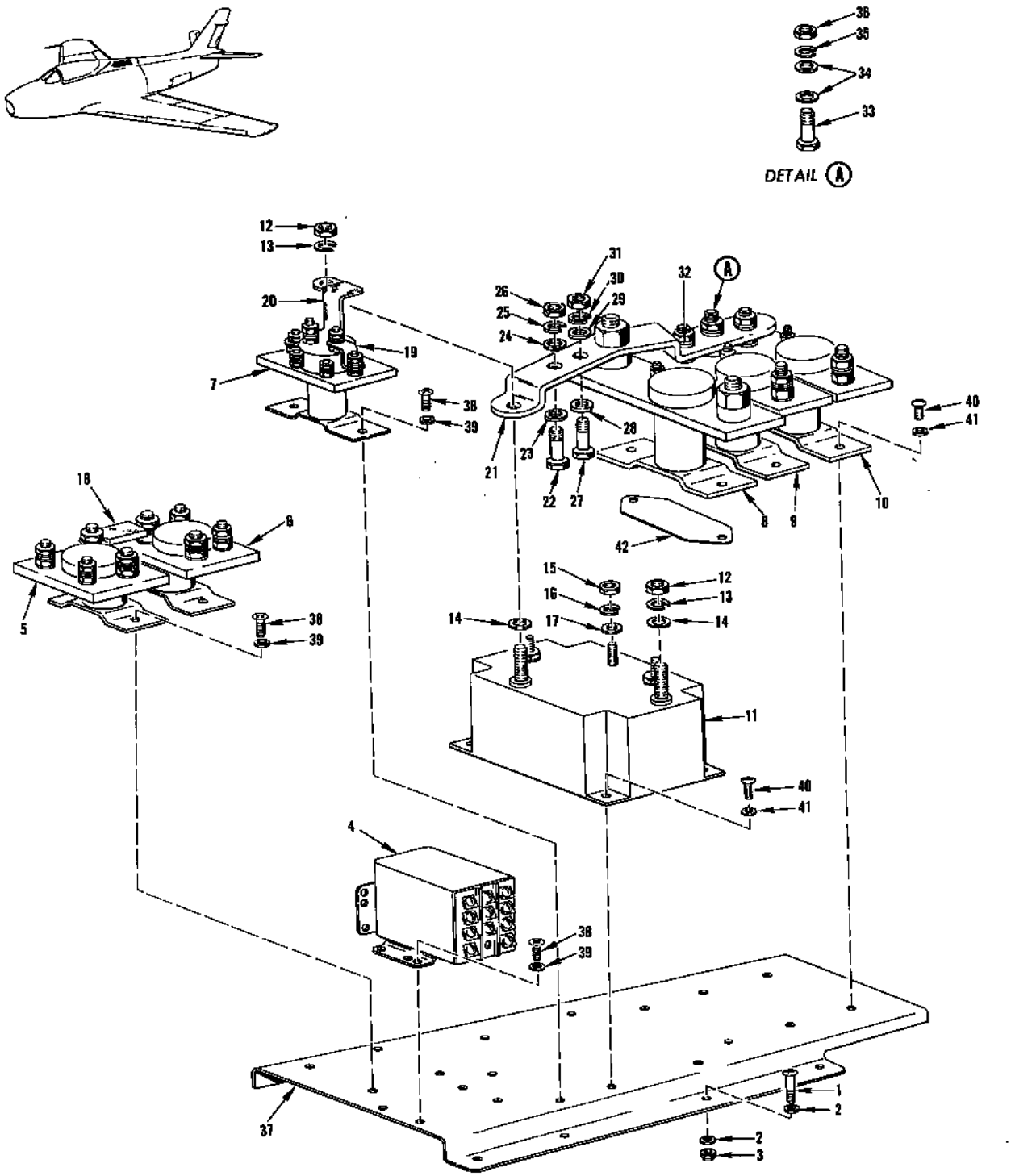

FIGURE 298 - POWER DISTRIBUTION RELAY PANEL ASSEMBLY - APPLICABLE TO AIRCRAFT CODED (FR)

POWER DISTRIBUTION RELAY PANEL ASSEMBLY - APPLICABLE TO AIRCRAFT CODED (FR)

FIGURE & INDEX NO.	PART NUMBER	1 2 3 4 5 6 7 NOMENCLATURE	UNITS PER ASSY.	USABLE ON CODE	S/C NO.
298	209-54138-11	PANEL ASSEMBLY, Electrical power distribution relay	1	FR	
	ATTACHING PARTS				
-1	AN520-10R8	SCREW	8	FR	
-2	2W18-10M	WASHER, Flat (NA) (89372)	13	FR	
-3	AN365-1032	NUT	5	FR	
	---*---				
-4	AN3312-2	. RELAY (starter shunt field) (AN3312-2 supersedes and is interchangeable with AN3312-1 for future procurement)	1	FR	
-5	AN3350-2	. RELAY (canopy open)	1	FR	
-6	AN3350-2	. RELAY (canopy closed)	1	FR	
-7	AN3353-1	. RELAY (canopy bus)	1	FR	
-8	AN3380-2	. RELAY (monitor bus)	1	FR	
-9	AN3370-2	. RELAY (secondary bus)	1	FR	
-10	AN3370-2	. RELAY (battery bus)	1	FR	
-11	AN3025-2	. CUTOUT (reverse current 28V dc)	1	FR	
-12	AN341-616	. . NUT	2	FR	
-13	AN935-616	. . WASHER	2	FR	
-14	AN960-616	. . WASHER	2	FR	
-15	AN341-10	. . NUT	3	FR	
-16	AN935-10	. . WASHER	3	FR	
-17	AN960-10	. . WASHER	3	FR	
-18	209-54072	. BUS BAR ASSEMBLY, Electrical power distribution canopy actuator relay	1	FR	
-19	181-54151	. BUS BAR, Electrical LH power distribution box canopy and battery relay	1	FR	
-20	209-54073	. BUS BAR ASSEMBLY, Electrical power distribution primary to canopy relay	1	FR	
-21	209-54457	. BUS BAR ASSEMBLY, Electrical power distribution primary	1	FR	
-22	AN6-10A	. BOLT	1	FR	
-23	AN961-616	. WASHER	1	FR	
-24	2W1AL24-34-125	. WASHER, Plain (NA) (89372)	1	FR	
-25	AN935B616	. WASHER	1	FR	
-26	AN341-616	. NUT	1	FR	
-27	AN6-10A	. BOLT	1	FR	
-28	AN961-616	. WASHER	1	FR	
-29	2W1AL34-32-125	. WASHER, Plain (NA) (89372)	1	FR	
-30	AN935B616	. WASHER	1	FR	
-31	AN341-616	. NUT	1	FR	
-32	2W1AL24-24-32	. WASHER, Plain (NA) (89372)	1	FR	
-33	AN6-7A	. BOLT	1	FR	
-34	AN961-616	. WASHER	2	FR	
-35	AN935B616	. WASHER	1	FR	
-36	AN341-616	. NUT	1	FR	
-37	209-54139-21	. PANEL, Electric power distribution relay	1	FR	
-38	AN515-8R7	. SCREW	10	FR	
-39	2W18-8L	. WASHER, Flat (NA) (89372)	10	FR	
-40	AN520-10R8	. SCREW	10	FR	
-41	2W18-10M	. WASHER, Flat (NA) (89372)	10	FR	
-42	244-54109	. SHIM, Electrical power distribution relay panel	5	FR	

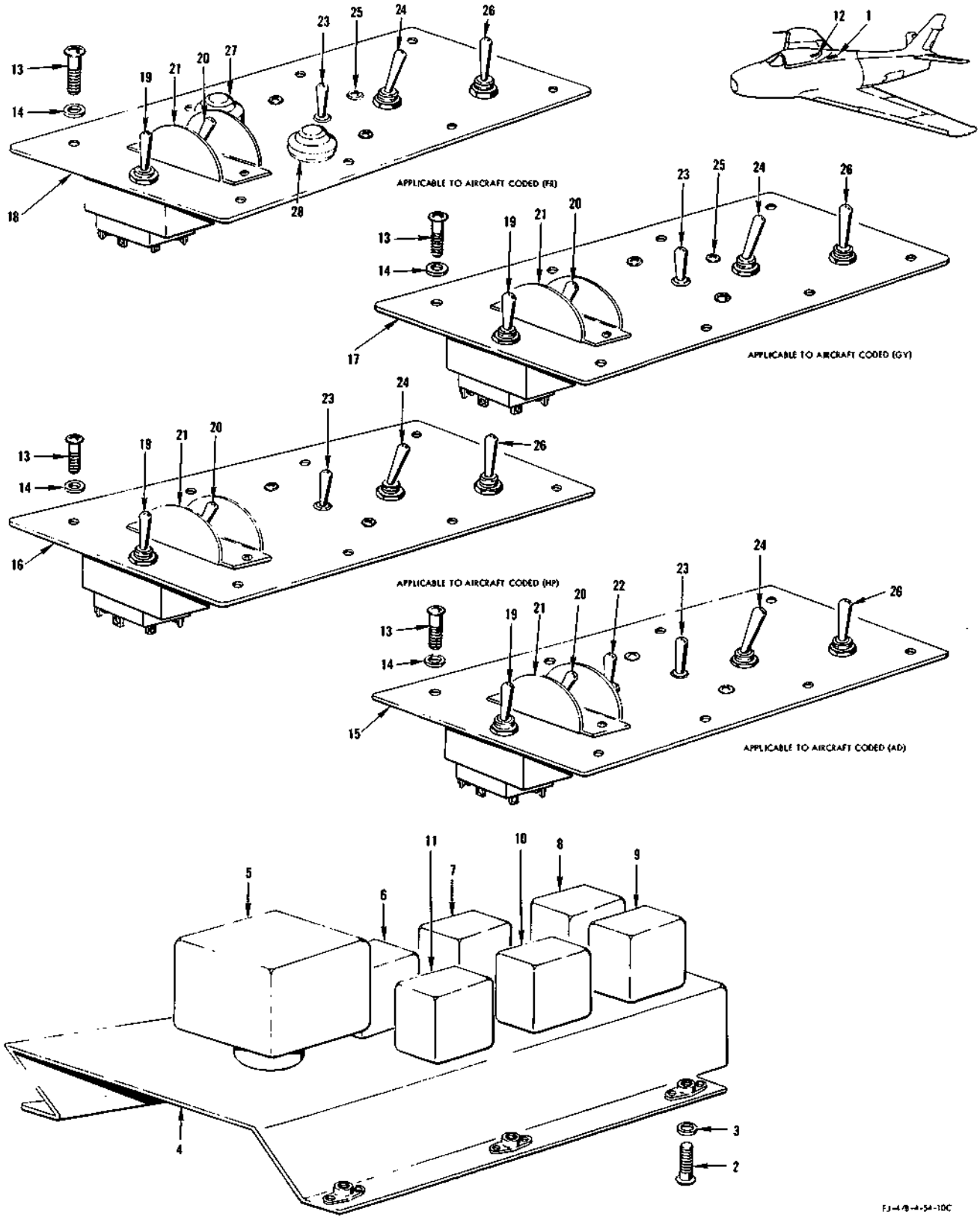

FIGURE 299 - CANOPY DECK RELAY AND ELECTRICAL TEST SWITCH PANEL ASSEMBLIES

CANOPY DECK RELAY AND ELECTRICAL TEST SWITCH PANEL ASSEMBLIES

FIGURE & INDEX NO.	PART NUMBER	1 2 3 4 5 6 7 NOMENCLATURE	UNITS PER ASSY.	USABLE ON CODE	S/C NO.
299-1	209-54101	PANEL ASSEMBLY, Canopy deck relay complete	1		
	ATTACHING PARTS				
-2	AN520-10R8	SCREW	6		
-3	2W18-10M	WASHER, Flat (NA) (89372)	6		
	---*---				
-4	209-54102	. PANEL ASSEMBLY, Canopy deck relay	1		
-5	AN3310-1	. RELAY (ground safety No. 2) (superseded by AN3310-2 for future procurement) (not to be used for replacement on any aircraft)	1	LE	
	AN3310-2	. RELAY (ground safety No. 2) (supersedes AN3310-1 for future procurement)	1	KY	
-6	9220-PM	. RELAY (cockpit air control) (LR) (35344)	1		
	2W18-10M	. WASHER, Flat (NA) (89372)	2		
-7	9220-PM	. RELAY (cockpit temperature and anti-ice control) (LR) (35344)	1		
	2W18-10M	. WASHER, Flat (NA) (89372)	2		
-8	9220-PM	. RELAY (landing gear downlock) (LR) (35344)	1		
	2W18-10M	. WASHER, Flat (NA) (89372)	2		
-9	9220-PM	. RELAY (hook by-pass control) (LR) (35344)	1		
	2W18-10M	. WASHER, Flat (NA) (89372)	2		
-10	9220-PM	. RELAY (ground safety No. 1) (LR) (35344)	1		
	2W18-10M	. WASHER, Flat (NA) (89372)	2		
-11	9220-PM	. RELAY (landing gear retract control) (LR) (35344)	1		
	2W18-10M	. WASHER, Flat (NA) (89372)	2		
-12	209-54106	PANEL ASSEMBLY, Electrical test switch complete	1	AD	284
	209-54106-11	PANEL ASSEMBLY, Electrical test switch complete	1	HP	284
	209-54106-21	PANEL ASSEMBLY, Electrical test switch complete	1	GY	
	209-54106-31	PANEL ASSEMBLY, Electrical test switch complete	1	FR	
	ATTACHING PARTS				
-13	AN520-10R10	SCREW	8		
-14	2W18-10M	WASHER, Flat (NA) (89372)	8		
	---*---				
-15	209-54107	. PANEL, Electrical test switch	1	AD	
-16	209-54107-11	. PANEL, Electrical test switch	1	HP	
-17	209-54107-21	. PANEL, Electrical test switch	1	GY	
-18	209-54107-31	. PANEL, Electrical test switch	1	FR	
-19	AN3027-7	. SWITCH (rudder pedal shaker test and approach light hook by-pass)	1		
-20	AN3022-11	. SWITCH (ground firing control)	1		
-21	AN3225-1	. GUARD	1		
	AN515-6R8	. SCREW	2		
-22	AN3027-7	. SWITCH (air compressor test)	1	AD	284
-23	AN3227-7	. SWITCH (wing aft transfer pump test)	1		
	AN515-6R8	. SCREW	2		
-24	AN3027-6	. SWITCH (camera test)	1		
-25	AN520-10R7	. SCREW	1	DP	
	1J1-3-3-50	. JUMPER, Wire (NA) (89372)	1	DP	
	AN365-1032	. NUT	1	DP	
	2W1AL14-14-16	. WASHER, Plain (NA) (89372)	1	DP	
	2W18-10M	. WASHER, Flat (NA) (89372)	1	DP	
-26	AN3027-7	. SWITCH (boost pump test)	1		
-27	W1034-BHR	. SWITCH (T-249 fin extension test) (RHS) (81640)	1	FR	
	ATTACHING PARTS				
	2W1AL40-32-16	. WASHER, Plain (NA) (89372)	1	FR	
	---*---				
-28	W1034-BHR	. SWITCH (T-249 TA-TB test) (RHS) (81640)	1	FR	
	ATTACHING PARTS				
	2W1AL40-32-16	. WASHER, Plain (NA) (89372)	1	FR	
	---*---				

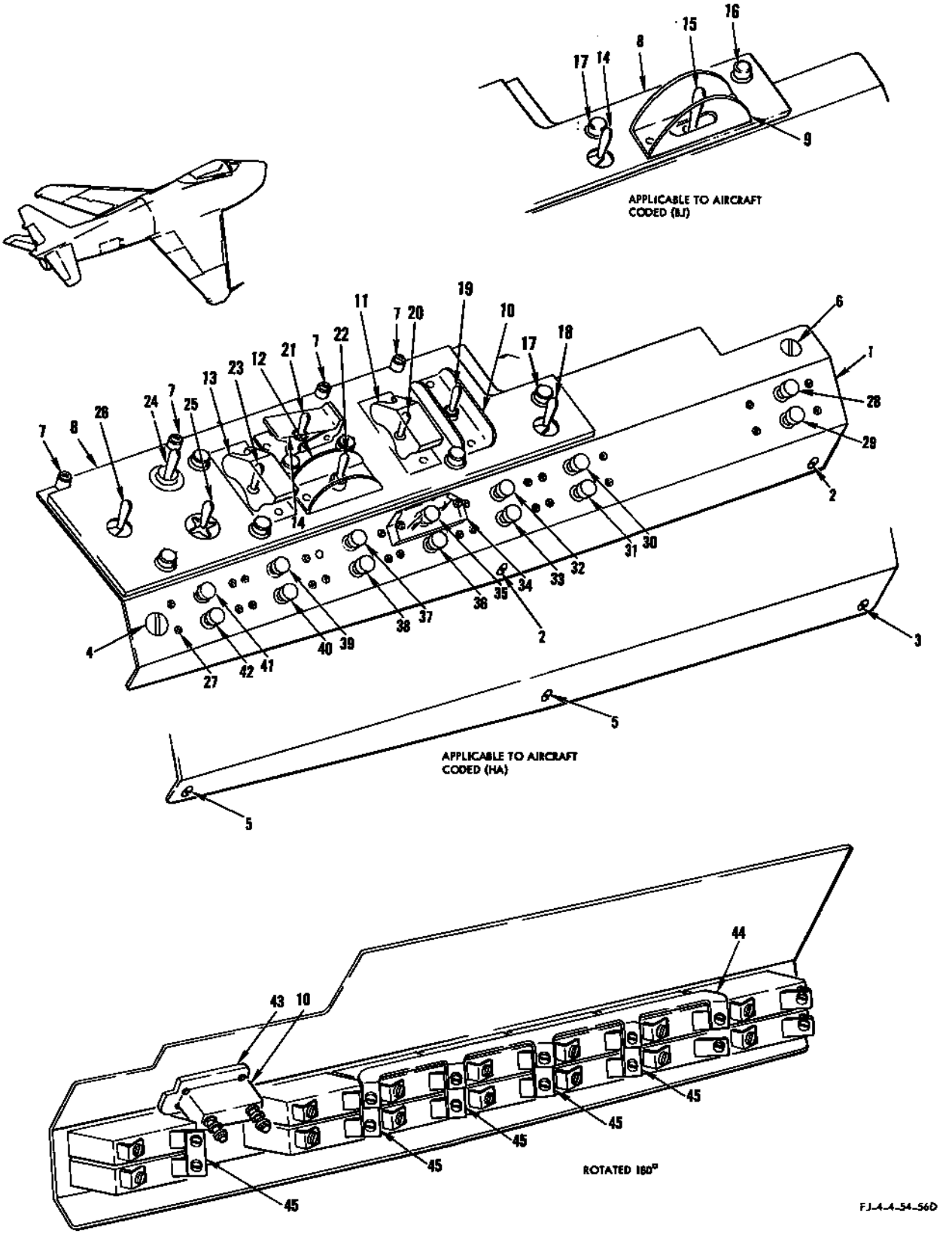

FIGURE 300 - LH FORWARD CONSOLE ASSEMBLY - APPLICABLE TO AIRCRAFT CODED (ET)

LH FORWARD CONSOLE ASSEMBLY - APPLICABLE TO AIRCRAFT CODED (ET)

FIGURE & INDEX NO.	PART NUMBER	1 2 3 4 5 6 7 NOMENCLATURE	UNITS PER ASSY.	USABLE ON CODE	S/C NO.
300	209-54115-13	CONSOLE ASSEMBLY, LH forward	1	BV	284, 357
	209-54115-15	CONSOLE ASSEMBLY, LH forward	1	AD	284, 357
	209-54115-17	CONSOLE ASSEMBLY, LH forward	1	EF	357
	209-54115-19	CONSOLE ASSEMBLY, LH forward	1	FX	
-1	209-54033	. PLATE ASSEMBLY, LH forward console	1	AD	
	209-54033-11	. PLATE ASSEMBLY, LH forward console	1	BV	
	209-54033-21	. PLATE ASSEMBLY, LH forward console	1	EF	
	209-54033-31	. PLATE ASSEMBLY, LH forward console	1	FX	
-2	98265-2-.110	. . STUD (UC) (61864)	2	BR	
	99836	. . PIN (UC) (61864)	2	BR	
-3	98265-2-.180	. . STUD (UC) (61864)	1	FX	
	99836	. . PIN (UC) (61864)	1	FX	
-4	98265-1-.150	. . STUD (UC) (61864)	1	BR	
	99836	. . PIN (UC) (61864)	1	BR	
-5	98265-1-.190	. . STUD (UC) (61864)	2	FX	
	99836	. . PIN (UC) (61864)	2	FX	
-6	98265-1-.200	. . STUD (UC) (61864)	1	ET	
	99836	. . PIN (UC) (61864)	1	ET	
-7	PF3-1/2-38	. . FASTENER (DZ) (72794)	4	ET	
	PS3-1/2	. . SPRING (DZ) (72794)	4	ET	
	PC3-1/2	. . CUP (DZ) (72794)	4	ET	
-8	209-54034	. PLATE ASSEMBLY, LH forward console lighting	1	BJ	
	209-54034-11	. PLATE ASSEMBLY, LH forward console	1	HA	
	209-54034-3	. . PLATE, LH forward console	1	BJ	
	209-54034-5	. . PLATE, LH forward console	1	HA	
-9	209-54048	. . GUARD, Electrical emergency flight control switch	1	BJ	
-10	209-54044	. . GUARD, Rudder trim switch electric	1	ET	
-11	209-54343	. . GUARD, Manual fuel control switch	1	ET	
-12	165-54251	. . GUARD, Electric cockpit air switch	1	ET	
-13	165-54039-13	. . GUARD, Electric switch	1	ET	
-14	AN3229-1	. . GUARD	1	ET	
-15	AN3230-2	. SWITCH (emergency flight control)	1	BJ	
	AN731-1	. NIPPLE	1	BJ	
	AN5158R7	. SCREW	4	BJ	
-16	MS25010-3A	. LIGHT	1	BJ	
	2W1A130-22-16	. WASHER, Plain (NA) (89372)	1	BJ	
-17	MS25010-3A	. LIGHT	7	ET	
	2W1AL30-22-16	. WASHER, Plain (NA) (89372)	7	ET	
-18	MS25028-6	. SWITCH (landing light)	1	ET	
	AN507-632R7	. SCREW	2	ET	
-19	AN3027-7	. SWITCH (rudder trim)	1	ET	
-20	AN3021-3	. SWITCH (engine manual fuel control)	1	ET	
-21	AN3227-3	. SWITCH (engine master)	1	ET	
	AN507-832R7	. SCREW	2	ET	
-22	2AT5	. SWITCH, Toggle (engine starter) (MCS) (91929)	1	ET	
	AN3224-2	. BOOT	1	ET	
	AN507-632B7	. SCREW	2	ET	
	AN508-4-3	. SCREW	2	ET	
-23	AN3021-2	. SWITCH (emergency ignition)	1	ET	
-24	7634K3	. SWITCH (flight control trim) (CUT) (15605)	1	BR	
-25	5050	. SWITCH, Position action (alternate trim) (MSE) (81579)	1	ET	
	AN507-632R7	. SCREW	2	ET	
-26	MS25028-6	. SWITCH (drop tank fuel transfer)	1	ET	
	AN507-632R8	. SCREW	2	ET	
-27	AN515-6R7	. SCREW	26	ET	
-28	AN3161P20	. CIRCUIT BREAKER (flap control and RH droop actuator)	1	ET	
-29	AN3161P20	. CIRCUIT BREAKER (LH droop actuator)	1	ET	
-30	AN3161P35	. CIRCUIT BREAKER (LH flap actuator)	1	ET	
-31	92	. CIRCUIT BREAKER (stores jettison and transfer control) (MEH) (76374)	1	ET	
-32	AN3161P35	. CIRCUIT BREAKER (RH flap actuator)	1	ET	
-33	91	. CIRCUIT BREAKER (landing gear control and wingfold control) (MEH) (76374)	1	ET	
-34	181-54618-3	. GUARD, Console assembly LH forward generator control electric	1	ET	
	AN507-632R12	. SCREW	2	ET	
-35	91	. CIRCUIT BREAKER (generator control) (MEH) (76374)	1	ET	
-36	91	. CIRCUIT BREAKER (alternate trim and manual fuel control) (MEH) (76374)	1	ET	
-37	91	. CIRCUIT BREAKER (cockpit pressurizing control) (MEH) (76374)	1	ET	
-38	90	. CIRCUIT BREAKER (landing and approach light control and landing gear warning) (MEH) (76374)	1	ET	
-39	91	. CIRCUIT BREAKER (normal rudder trim) (MEH) (76374)	1	ET	
-40	90	. CIRCUIT BREAKER (fuel transfer pump and fuel shutoff valve) (MEH) (76374)	1	ET	
-41	90	. CIRCUIT BREAKER (starter control and fuel shutoff) (MEH) (76374)	1	ET	
-42	AN3161P5	. CIRCUIT BREAKER (speed brake)	1	DM	
	AN3161P5	. CIRCUIT BREAKER (speed brake and compressor control)	1	AD	284
	AN3161P5	. CIRCUIT BREAKER (speed brake and oxygen indicator)	1	FX	
-43	209-54042	. SPACER, Emergency flight control switch electrical	1	BJ	
	AN507-832R10	. SCREW	2	BJ	
	AN364-832	. NUT	2	BJ	
-44	181-54677-41	. BUS BAR ASSEMBLY, Electrical circuit breaker	1	ET	
	181-54677-35	. . BUS BAR, Electrical circuit breaker	1	ET	
	181-54677-37	. . GLASS FABRIC	4	ET	
	181-54677-39	. . GLASS FABRIC	1	ET	
-45	194-54059-21	. BAR, Electrical bus	5	ET	

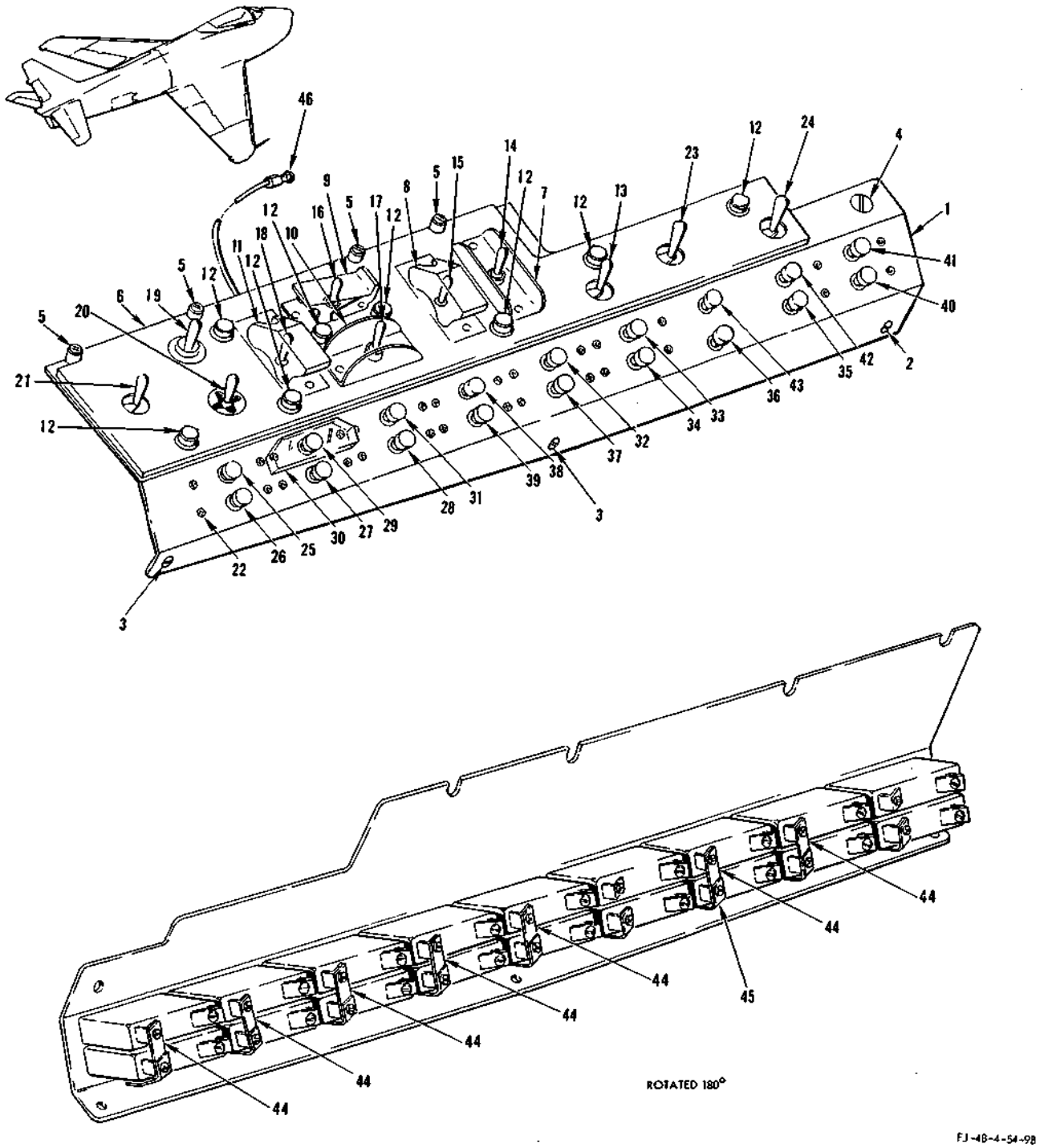

FIGURE 301 - LH FORWARD CONSOLE ASSEMBLY - APPLICABLE TO AIRCRAFT CODED (FR)

STATION 156 LH SIDE CIRCUIT BREAKER PANEL ASSEMBLY COMPLETE - APPLICABLE TO AIRCRAFT CODED (ET)

FIGURE & INDEX NO.	PART NUMBER	1 2 3 4 5 6 7 NOMENCLATURE	UNITS PER ASSY.	USABLE ON CODE	S/C NO.
303	209-54170	PANEL ASSEMBLY, Circuit breaker station 156 LH side complete	1	AD	517
	209-54170-11	PANEL ASSEMBLY, Circuit breaker station 156 LH side complete	1	BD	517
	209-54170-31	PANEL ASSEMBLY, Circuit breaker station 156 LH side complete	1	CD	517
	209-54170-41	PANEL ASSEMBLY, Circuit breaker station 156 LH side complete	1	HA	517
	ATTACHING PARTS				
	AN520-10R12	SCREW	5	ET	
	2W18-10M	WASHER, Flat (NA) (89372)	5	ET	
	---*---				
-1	209-54169	. PANEL ASSEMBLY, Circuit breaker station 156 LH side	1	AD	
-2	209-54169-11	. PANEL ASSEMBLY, Circuit breaker station 156 LH side	1	BD	
-3	209-54169-31	. PANEL ASSEMBLY, Circuit breaker station 156 LH side	1	CD	
-4	209-54169-41	. PANEL ASSEMBLY, Circuit breaker station 156 LH side	1	HA	
-5	194-54059-5	. BAR, Electrical bus	3	ET	
-6	194-54059-19	. BAR, Electrical bus	1	ET	284
-7	194-54059-3	. BAR, Electrical bus	1	ET	
-8	AN515-632R7	. SCREW	24	ET	
-9	90	. CIRCUIT BREAKER (defuel and float test and yaw damper) (MEH) (76374)	1	FK	
-10	90	. CIRCUIT BREAKER (defuel and float test) (MEH) (76374)	1	AS	
-11	90	. CIRCUIT BREAKER (ground safety) (MEH) (76374)	1	ET	374
-12	90	. CIRCUIT BREAKER (AN/ARN-21 radio) (MEH) (76374)	1	ET	
-13	90	. CIRCUIT BREAKER (No. 2 inverter) (MEH) (76374)	1	ET	
-14	91	. CIRCUIT BREAKER (water separator heater) (MEH) (76374)	1	ET	
-15	94	. CIRCUIT BREAKER (AN/ARC-27 radio) (MEH) (76374)	1	ET	
-16	91	. CIRCUIT BREAKER (AN/ARN-14 radio) (MEH) (76374)	1	ET	
-17	90	. CIRCUIT BREAKER (cockpit temperature amplifier) (MEH) (76374)	1	ET	
-18	94	. CIRCUIT BREAKER (air compressor) (MEH) (76374)	1	ET	284
-19	90	. CIRCUIT BREAKER (speed brake indicator and anti-ice warning) (MEH) (76374)	1	ET	
-20	94	. CIRCUIT BREAKER (LH inboard ammo boost) (MEH) (76374)	1	ET	
-21	94	. CIRCUIT BREAKER (LH outboard ammo boost) (MEH) (76374)	1	ET	
-22	AN520-10R12	. SCREW	2	BJ	366
-23	PDLM105	. CIRCUIT BREAKER (emergency flight hydraulic pump) (SPTD) (82647)	1	BJ	366
	AN936A416B	. WASHER	2	BJ	366
	2W1AL24-28-032	. WASHER, Plain (NA) (89372)	2	BJ	366
-24	PGM200	. CIRCUIT BREAKER (No. 2 inverter power) (SPTD) (82647) (superseded by C7855-6-200 (SPTD) (82647) for future procurement)	1	ET	
	C7855-6-200	. CIRCUIT BREAKER (No. 2 inverter power) (SPTD) (82647) (supersedes PGM200 (SPTD) (82647) for future procurement)	1	ET	
	AN936A616B	. WASHER	2	ET	
	2W1AL24-22-016	. WASHER, Plain (NA) (89372)	1	ET	
	2W1AL24-26-016	. WASHER, Plain (NA) (89372)	1	ET	
-25	AN520-10R8	. SCREW	4	ET	
	2W18-10M	. WASHER, Flat (NA) (89372)	4	ET	
	AN364-1032	. NUT	4	ET	
	342001 *1	. 3 AG EXTRACTOR, Fuse post (LTF) (75915)	15	ET	
-26	342001-SA2	. . KNOB, Subassembly (LTF) (75915)	1	ET	
-27	342001-SA1	. . BODY, Subassembly (LTF) (75915)	1	ET	
-28	901-2	. . WASHER (LTF) (75915)	1	ET	
-29	905-3	. . LOCKWASHER (LTF) (75915)	1	ET	
-30	903-12	. . NUT (LTF) (75915)	1	ET	
-31	2W1AL34-24-15	. WASHER, Plain (NA) (89372)	13	ET	
	2W1AL34-24-15	. WASHER, Plain (NA) (89372)	18	FH	
-32	312001	. FUSE (cockpit temperature regulator) (LTF) (75915)	1	ET	
-33	312001	. FUSE (cockpit anti-ice regulator (LTF) (75915)	1	ET	
-34	312005	. FUSE (AN/ARN-21 radio phase A) (LTF) (75915)	1	ET	
-35	312001	. FUSE (AN/ARN-21 radio phase C) (LTF) (75915)	1	ET	
-36	314015	. FUSE (secondary bus phase A) (LTF) (75915)	1	ET	
-37	314015	. FUSE (secondary bus phase C) (LTF) (75915)	1	ET	
-38	312003	. FUSE (primary bus phase A) (LTF) (75915)	1	ET	
-39	312003	. FUSE (primary bus phase C) (LTF) (75915)	1	ET	
-40	312001	. FUSE (fuel quantity) (LTF) (75915)	1	ET	
-41	314015	. FUSE (secondary bus phase B) (LTF) (75915)	1	ET	
-42	312005	. FUSE (transformer phase A) (LTF) (75915)	1	ET	
-43	312005	. FUSE (transformer phase B) (LTF) (75915)	1	ET	
-44	312005	. FUSE (transformer phase C) (LTF) (75915)	1	ET	
-45	312001	. FUSE (yaw damper phase A) (LTF) (75915)	1	ET	
-46	312001	. FUSE (yaw damper phase C) (LTF) (75915)	1	ET	
-47	312001	. FUSE (counter-pointer altimeter) (LTF) (75915) (only on aircraft having SC 517 incorporated)	1	ET	
	244-54026	. NAMEPLATE, Electrical altimeter fuse (only on aircraft having SC 517 incorporated)	1	ET	
-48	295202-10A	. GROMMET (MKL) (76530)	1	ET	
-49	295202-14A	. GROMMET (MKL) (76530)	1	ET	
-50	295202-18A	. GROMMET (MKL) (76530)	1	ET	
-51	295202-24A	. GROMMET (MKL) (76530)	1	ET	

NOTE: *1 Quantity required per assembly changes to 16 after SC 517 has been incorporated

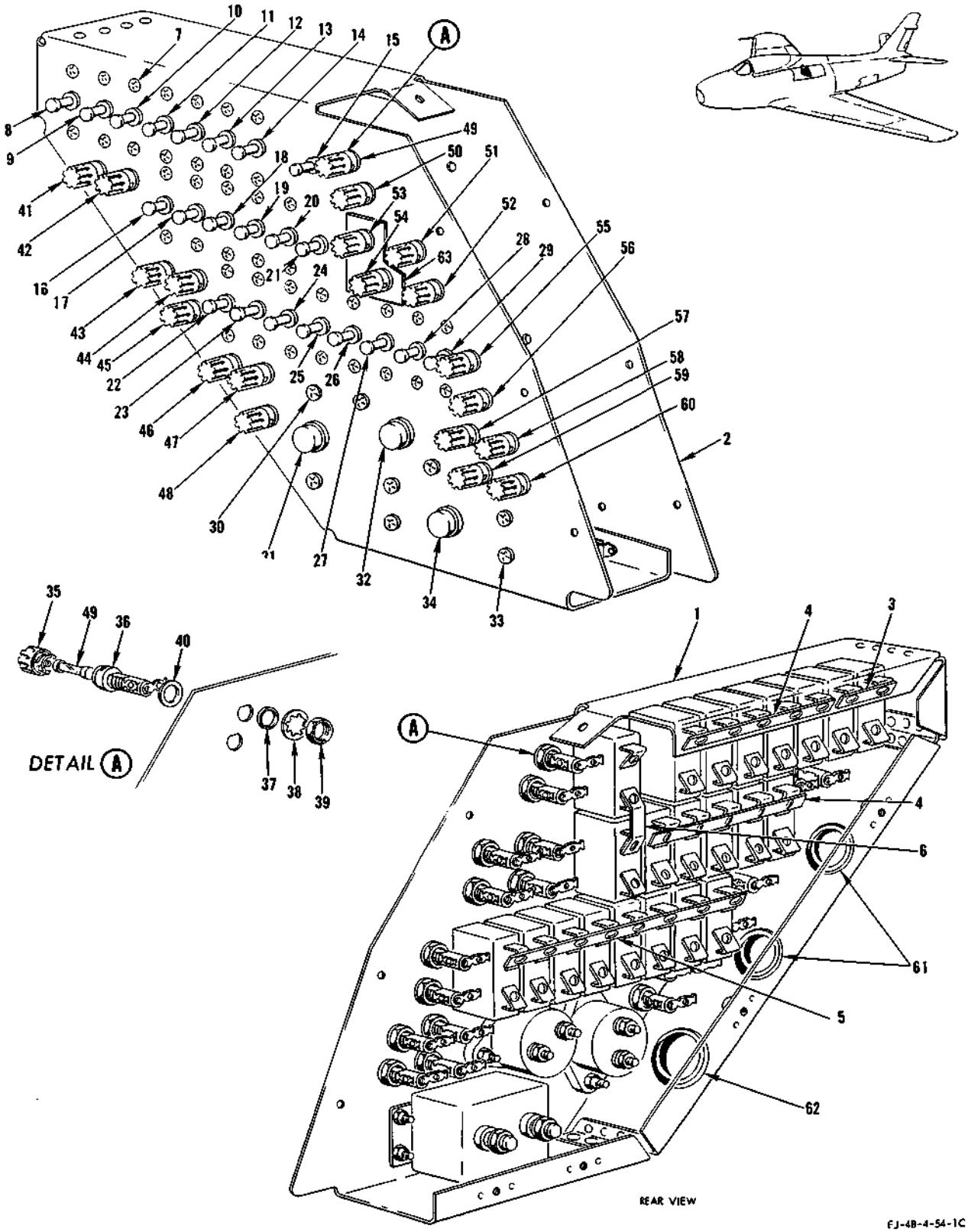

FIGURE 304 - STATION 156 LH SIDE CIRCUIT BREAKER PANEL ASSEMBLY - APPLICABLE TO AIRCRAFT CODED (FR)

STATION 156 LH SIDE CIRCUIT BREAKER PANEL ASSEMBLY - APPLICABLE TO AIRCRAFT CODED (FR)

FIGURE & INDEX NO.	PART NUMBER	1 2 3 4 5 6 7 NOMENCLATURE	UNITS PER ASSY.	USABLE ON CODE	S/C NO.
304	209-540110	PANEL ASSEMBLY, Circuit breaker station 156 LH side	1	HJ	
	209-540110-11	PANEL ASSEMBLY, Circuit breaker station 156 LH side	1	NR	
	209-540110-21	PANEL ASSEMBLY, Circuit breaker station 156 LH side	1	NS	
	209-540110-31	PANEL ASSEMBLY, Circuit breaker station 156 LH side	1	NT	
	209-540110-41	PANEL ASSEMBLY, Circuit breaker station 156 LH side	1	ME	
-1	209-540109	. PANEL ASSEMBLY, Circuit breaker station 156 LH side	1	HJ	
	209-540109-11	. PANEL ASSEMBLY, Circuit breaker station 156 LH side	1	NR	
	209-540109-21	. PANEL ASSEMBLY, Circuit breaker station 156 LH side	1	NS	
	209-540109-31	. PANEL ASSEMBLY, Circuit breaker station 156 LH side	1	NT	
	209-540109-41	. PANEL ASSEMBLY, Circuit breaker station 156 LH side	1	ME	
-2	209-54463	. COVER, Circuit breaker panel station 156 LH side	1	FR	
	ATTACHING PARTS				
	AN515-8R8	. SCREW	6	FR	
	2W18-8	. WASHER, Flat (NA) (89372)	6	FR	
	---*---				
-3	194-54059-61	. BAR, Electrical bus	1	FR	
-4	194-54059-63	. BAR, Electrical bus	2	FR	
-5	194-54059-65	. BAR, Electrical bus	1	FR	
-6	194-54059-19	. BAR, Electrical bus	1	ME	
-7	AN515-6R7	. SCREW	40	FR	
	AN515-6R7	. SCREW	4	ME	
-8	MS25017-5	. CIRCUIT BREAKER (ARN-21)	1	FR	
-9	MS25017-10	. CIRCUIT BREAKER (water separator heater)	1	FR	
-10	MS25017-10	. CIRCUIT BREAKER (ARN-14)	1	FR	151
-11	MS25017-5	. CIRCUIT BREAKER (instrument vibrator)	1	FR	
-12	MS25017-25	. CIRCUIT BREAKER (ARC-27)	1	FR	
-13	MS25017-5	. CIRCUIT BREAKER (cockpit temperature amplifier)	1	FR	
-14	MS25017-15	. CIRCUIT BREAKER (buddy tanker power)	1	FR	
-15	MS25017-10	. CIRCUIT BREAKER (refuel)	1	ME	
-16	MS25017-5	. CIRCUIT BREAKER (flight pressure warning)	1	FR	
-17	MS25017-25	. CIRCUIT BREAKER (air compressor)	1	FR	
-18	MS25017-5	. CIRCUIT BREAKER (defuel and float test and yaw damper)	1	ML	
	MS25017-5	. CIRCUIT BREAKER (defuel and yaw damper)	1	LT	
-19	MS25017-5	. CIRCUIT BREAKER (ground safety)	1	HJ	374
	MS25017-5	. CIRCUIT BREAKER (ground safety and over voltage)	1	FL	
-20	MS25017-5	. CIRCUIT BREAKER (speed brake indicator and anti-ice warning)	1	FR	
-21	MS25017-5	. CIRCUIT BREAKER (float test and drop tank refuel)	1	NW	
	MS25017-5	. CIRCUIT BREAKER (float test)	1	ME	
-22	MS25017-5	. CIRCUIT BREAKER (angle of attack heater)	1	FR	
-23	MS25017-5	. CIRCUIT BREAKER (angle of yaw heater)	1	FR	
-24	MS25017-10	. CIRCUIT BREAKER (aft fuel shutoff)	1	ME	
-25	MS25017-5	. CIRCUIT BREAKER (angle of attack indicator)	1	FR	
-26	MS25017-5	. CIRCUIT BREAKER (compass controller)	1	FR	
-27	MS25017-15	. CIRCUIT BREAKER (buddy fuel dump)	1	FR	
-28	MS25017-5	. CIRCUIT BREAKER (T-249 fin and TA-TB test)	1	FR	
-29	MS25017-15	. CIRCUIT BREAKER (buddy tanker emergency power)	1	FR	
-30	AN520-10R12	. SCREW	4	FR	
	AN936A416B	. WASHER	4	FR	
	AN961-416	. WASHER	4	FR	
-31	PDLM-60	. CIRCUIT BREAKER (T-208/T-249 emergency power) (SPTD) (82647)	1	FR	
-32	PDLM-60	. CIRCUIT BREAKER (T-208/T-249 power) (SPTD) (82647)	1	FR	
-33	AN520-10R8	. SCREW	4	FR	
	2W18-10M	. WASHER, Flat (NA) (89372)	4	FR	
	AN364-1032	. NUT	4	FR	
	AN936A616B	. WASHER	2	FR	
	AN961-616	. WASHER	2	FR	
-34	C7855-6-200	. CIRCUIT BREAKER (No. 2 inverter power) (SPTD) (82647) (supersedes PGM-200 (SPTD) (82647) for future procurement) (interchangeable with PGM-200 (SPTD) (82647) on aircraft coded (MD))	1	FR	
	342001	. 3AG EXTRACTOR, Fuse post (LTF) (75915)	18	FR	
	342001	. 3AG EXTRACTOR, Fuse post (LTF) (75915)	2	KY	
-35	342001-SA2	. . KNOB (LTF) (75915)	1	FR	
-36	342001-SA1	. . BODY (LTF) (75915)	1	FR	
-37	901-2	. . WASHER (LTF) (75915)	1	FR	
-38	905-3	. . LOCKWASHER (LTF) (75915)	1	FR	
-39	903-12	. . NUT (LTF) (75915)	1	FR	
-40	2W1AL34-24-15	. WASHER, Plain (NA) (89372)	18	FR	
	2W1AL34-24-15	. WASHER, Plain (NA) (89372)	2	KY	
-41	312001	. FUSE (yaw damper phase A) (LTF) (75915)	1	FR	
-42	312001	. FUSE (yaw damper phase C) (LTF) (75915)	1	FR	
-43	312005	. FUSE (transformer phase A) (LTF) (75915)	1	FR	
-44	312005	. FUSE (transformer phase B) (LTF) (75915)	1	FR	
-45	312005	. FUSE (transformer phase C) (LTF) (75915)	1	FR	
-46	314015	. FUSE (secondary bus phase A) (LTF) (75915)	1	FR	
-47	314015	. FUSE (secondary bus phase B) (LTF) (75915)	1	FR	
-48	314015	. FUSE (secondary bus phase C) (LTF) (75915)	1	FR	
-49	312001	. FUSE (cockpit temperature regulator) (LTF) (75915)	1	FR	
-50	312001	. FUSE (cockpit anti-ice regulator) (LTF) (75915)	1	FR	
-51	312001	. FUSE (ARN-21 phase A) (LTF) (75915)	1	FR	
-52	312005	. FUSE (ARN-21 phase B) (LTF) (75915)	1	FR	
-53	312001	. FUSE (missile phase A) (LTF) (75915)	1	KY	
-54	312001	. FUSE (missile phase C) (LTF) (75915)	1	KY	
-55	312003	. FUSE (primary bus phase A) (LTF) (75915)	1	FR	

STATION 156 LH SIDE CIRCUIT BREAKER PANEL ASSEMBLY - APPLICABLE TO AIRCRAFT CODED (FR)

FIGURE & INDEX NO.	PART NUMBER	1	2	3	4	5	6	7	NOMENCLATURE	UNITS PER ASSY.	USABLE ON CODE	S/C NO.
304-56	312003	.							FUSE (primary bus phase C) (LTF) (75915)	1	FR	
-57	313001	.							FUSE (directional gyro phase A) (LTF) (75915)	1	FR	
-58	313001	.							FUSE (directional gyro phase C) (LTF) (75915)	1	FR	
-59	313001	.							FUSE (compass coupler phase A) (LTF) (75915)	1	FR	
-60	313001	.							FUSE (compass coupler phase C) (LTF) (75915)	1	FR	
-61	295202-20A	.							GROMMET (UC) (61864)	2	FR	
-62	295202-22A	.							GROMMET (UC) (61864)	1	FR	
-63	209-540173								NAMEPLATE, Bullpup missile system electrical fuse (added by Service Change No. 525)	1	FR	

RH FORWARD CONSOLE ASSEMBLY - APPLICABLE TO AIRCRAFT CODED (ET)

FIGURE & INDEX NO.	PART NUMBER	1 2 3 4 5 6 7 NOMENCLATURE	UNITS PER ASSY.	USABLE ON CODE	S/C NO.
305	209-54026-11	CONSOLE ASSEMBLY, RH forward	1	U	374
	209-54026-21	CONSOLE ASSEMBLY, RH forward	1	DT	374
	209-54026-31	CONSOLE ASSEMBLY, RH forward	1	DU	374
	209-54026-41	CONSOLE ASSEMBLY, RH forward	1	FX	374
-1	209-54027	. PLATE ASSEMBLY, RH forward console	1	DH	
	209-54027-11	. PLATE ASSEMBLY, RH forward console	1	DU	
	209-54027-21	. PLATE ASSEMBLY, RH forward console	1	FX	
-2	98265-1-.150	. . STUD (UC) (61864)	4	ET	
	99836	. . PIN (UC) (61864)	4	ET	
-3	PF3-1/2-38	. . FASTENER (DZ) (72794)	6	ET	
	PS3-1/2	. . SPRING (DZ) (72794)	6	ET	
	PC3-1/2	. . CUP (DZ) (72794)	6	ET	
-4	209-54028	. PLATE ASSEMBLY, RH forward console lighting	1	ET	374
-5	165-54039-19	. . GUARD, Electrical switch (superseded by 244-954001 (NA Dwg Design Spec) for future procurement) (165-54039-19 not to be used for replacement on any aircraft)	1	ET	
	244-954001	. . GUARD, Electrical switch (NA Dwg Design Spec) (supersedes 165-54039-19 for future procurement) (165-54039-19 not to be used for replacement on any aircraft)	1	ET	
-6	AN3027-8	. SWITCH (canopy defrost)	1	ET	
-7	AN3027-8	. SWITCH (defrost)	1	ET	
-8	AN3027-3	. SWITCH (windshield anti-ice)	1	ET	
-9	AN3021-2	. SWITCH (pitot heater)	1	ET	
-10	AN3021-2	. SWITCH (stand-by compass and range indicator)	1	ET	
-11	AN3022-2	. SWITCH (cockpit floodlight)	1	ET	
-12	AN3021-1	. SWITCH (instrument floodlight)	1	ET	
-13	14PB1	. SWITCH (warning light test) (MCS) (40228)	1	ET	
-14	1AT3	. SWITCH (console floodlight) (MCS) (40228)	1	ET	
	ATTACHING PARTS				
	AN507-632R7	. SCREW	2	ET	
	AN508-4-3	. SCREW	1	ET	
	---*---				
-15	AN3224-2	. BOOT	1	ET	
-16	MS25029-5	. SWITCH (instrument AC power) (supersedes 8775K8 (CUT) (15605) for future procurement)	1	ET	
	ATTACHING PARTS				
	AN507-632R8	. SCREW	2	ET	
	---*---				
-17	8905K780	. SWITCH (battery and generator) (CUT) (15605)	1	ET	
	ATTACHING PARTS				
	AN507-632R8	. SCREW	2	ET	
	---*---				
-18	MS25010-3A	. LIGHT ASSEMBLY	15	ET	
	2W1AL30-22-16	. WASHER, Plain (NA) (89372)	15	ET	
-19	181-540102-3	. CAP ASSEMBLY, Warning light (instrument power off)	1	U	
	204	. BASE (KOR) (81590)	1	U	
	AN3121-313	. LAMP	2	U	
	209-54184-3	. CAP ASSEMBLY, Warning light (instrument power off)	1	GA	
	204-AE	. BASE (KOR) (81590)	1	GA	
	AN3121-313	. LAMP	2	GA	
-20	181-540102-17	. CAP ASSEMBLY, Warning light (generator out)	1	U	
	204	. BASE (KOR) (81590)	1	U	
	AN3121-313	. LAMP	2	U	
	209-54184-17	. CAP ASSEMBLY, Warning light (generator out)	1	GA	
	204-AB	. BASE (KOR) (81590)	1	GA	
	AN3121-313	. LAMP	2	GA	
-21	194-54054	. KNOB ASSEMBLY, Light rheostat	2	ET	
-22	AN565D8H6	. . SETSCREW	1	ET	
-23	AN565D8H3	. . SETSCREW	1	ET	
-24	AN507-440-6	. . SCREW	2	ET	
-25	194-51127	. . HANDLE, Cockpit temperature control knob	1	ET	
-26	194-54055-1	. . PLATE, Light rheostat knob	1	ET	
-27	CM11029	. RESISTOR, Variable (instrument light rheostat) (CLR) (12697)	1	ET	
-28	CM11030	. RESISTOR, Variable (console and floodlight rheostat) (CLR) (12697)	1	ET	
-29	RW30G101	. RESISTOR (console floodlight) (JAN-R-26)	1	ET	
-30	RW30G630	. RESISTOR (instrument floodlight) (JAN-R-26)	1	ET	
-31	RW30G350	. RESISTOR (console floodlight) (JAN-R-26)	1	ET	
-32	AN365-832	. NUT	3	ET	
-33	2W18-8L	. WASHER, Flat (NA) (89372)	6	ET	
-34	2W1P12-18-63	. WASHER, Plain (NA) (89372)	6	ET	
-35	AN507-832R24	. SCREW	3	ET	
-36	AN515-6R7	. SCREW	36	ET	
-37	90	. CIRCUIT BREAKER (inverter warning) (MEH) (76374)	1	ET	
-38	90	. CIRCUIT BREAKER (instrument light) (MEH) (76374)	1	ET	
-39	90	. CIRCUIT BREAKER (AN/APG-30A) (MEH) (76374)	1	ET	
-40	90	. CIRCUIT BREAKER (gun sight) (MEH) (76374)	1	ET	
-41	90	. CIRCUIT BREAKER (AN/APX-6B (MEH) (76374)	1	ET	
-42	90	. CIRCUIT BREAKER (warning light test and rudder pedal shaker) (MEH) (76374)	1	ET	
-43	90	. CIRCUIT BREAKER (console light) (MEH) (76374)	1	ET	
-44	90	. CIRCUIT BREAKER (console floodlight) (MEH) (76374)	1	ET	
-45	90	. CIRCUIT BREAKER (instrument floodlight and cockpit floodlight) (MEH) (76374)	1	ET	

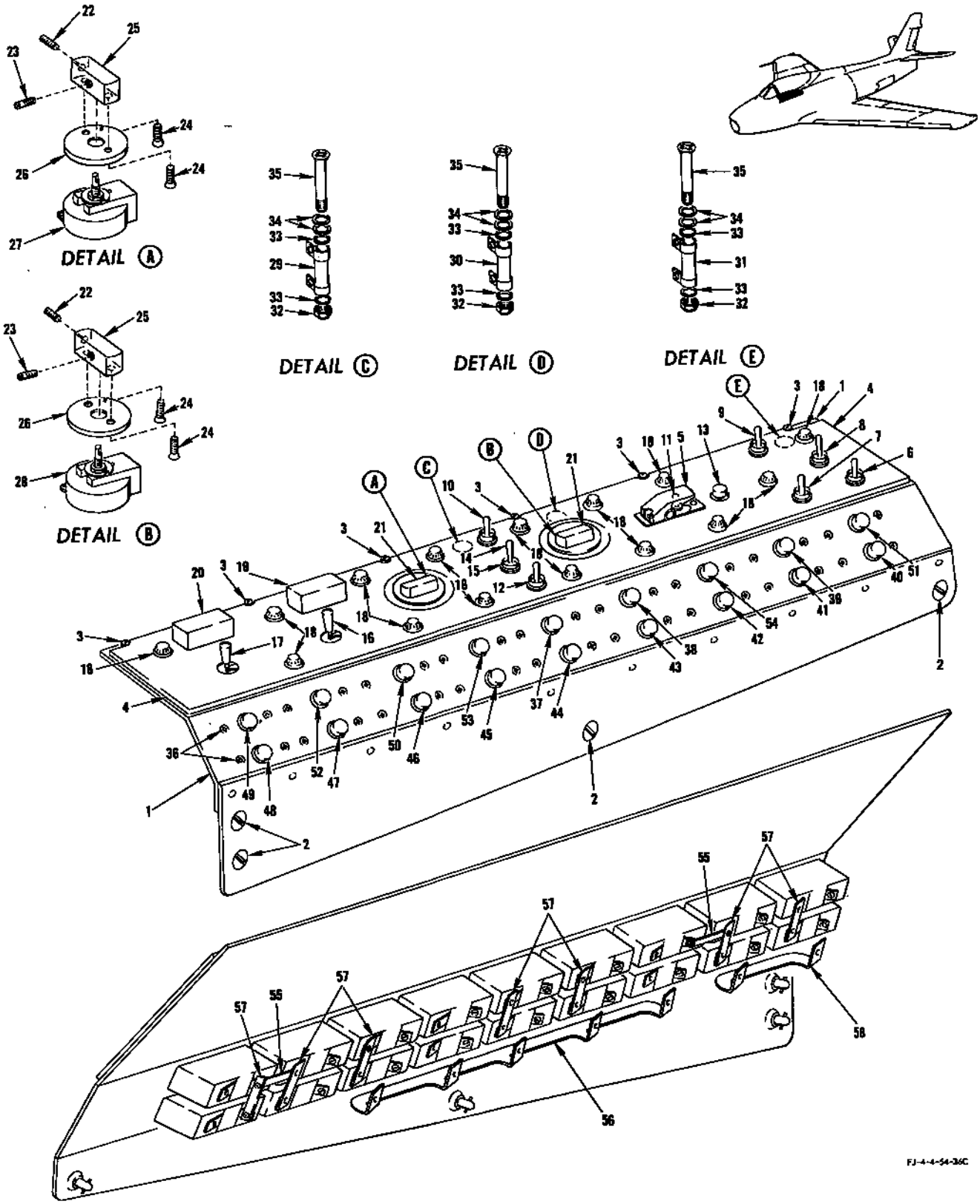

FIGURE 305 - RH FORWARD CONSOLE ASSEMBLY - APPLICABLE TO AIRCRAFT CODED (ET)

RH FORWARD CONSOLE ASSEMBLY - APPLICABLE TO AIRCRAFT CODED (ET)

FIGURE & INDEX NO.	PART NUMBER	1	2	3	4	5	6	7	NOMENCLATURE	UNITS PER ASSY.	USABLE ON CODE	S/C NO.
305-46	90	.							CIRCUIT BREAKER (fire detector power) (MEH) (76374)	1	ET	
-47	90	.							CIRCUIT BREAKER (AN/ARA-25 radio) (MEH) (76374)	1	ET	
-48	90	.							CIRCUIT BREAKER (instrument vibrator) (MEH) (76374)	1	ET	
-49	91	.							CIRCUIT BREAKER (exterior light) (MEH) (76374)	1	ET	
-50	91	.							CIRCUIT BREAKER (arresting hook) (MEH) (76374)	1	ET	
-51	91	.							CIRCUIT BREAKER (defrost and anti-ice) (MEH) (76374)	1	ET	
-52	92	.							CIRCUIT BREAKER (fuselage signal light) (MEH) (76374)	1	ET	
-53	92	.							CIRCUIT BREAKER (seat actuator) (MEH) (76374)	1	ET	
-54	92	.							CIRCUIT BREAKER (pitot heater and Mach trim) (MEH) (76374)	1	DH	
	92	.							CIRCUIT BREAKER (pitot heater) (MEH) (76374)	1	HH	
-55	194-54059-19	.							BAR, Electrical bus	2	ET	
-56	181-54677-41	.							BUS BAR ASSEMBLY, Electrical circuit breaker	1	ET	
	181-54677-35	.	.						BUS BAR, Electrical circuit breaker	1	ET	
	181-54677-37	.	.						GLASS FABRIC	4	ET	
	181-54677-39	.	.						GLASS FABRIC	1	ET	
-57	194-54059-21	.							BAR, Electrical bus	7	ET	
-58	181-54677-33	.							BUS BAR ASSEMBLY, Electrical circuit breaker	1	ET	
	181-54677-3	.	.						BUS BAR, Electrical circuit breaker	1	ET	
	181-54677-5	.	.						GLASS FABRIC	4	ET	
	181-54677-7	.	.						GLASS FABRIC	1	ET	

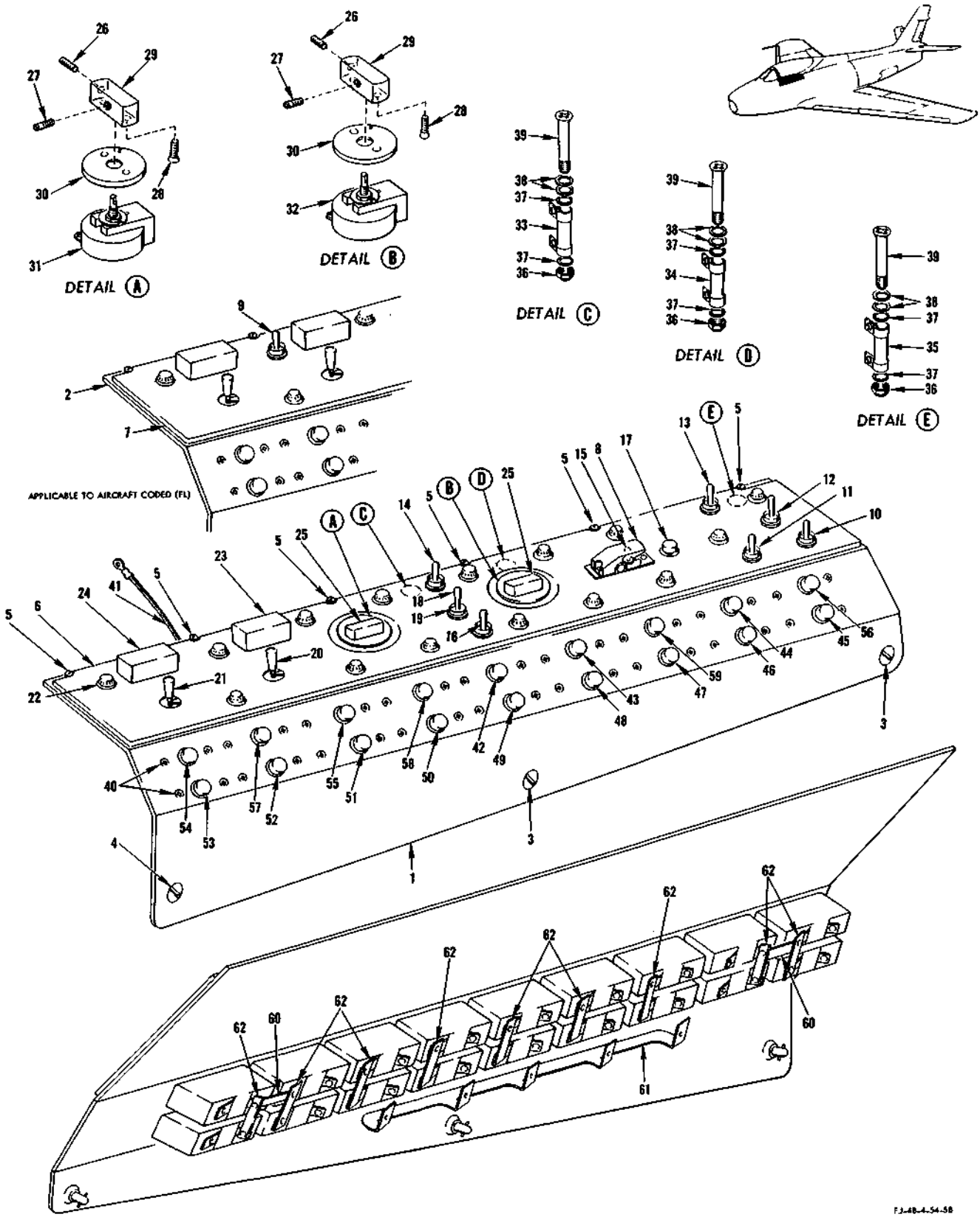

FIGURE 306 - RH FORWARD CONSOLE ASSEMBLY - APPLICABLE TO AIRCRAFT CODED (FR)

RH FORWARD CONSOLE ASSEMBLY - APPLICABLE TO AIRCRAFT CODED (FR)

FIGURE & INDEX NO.	PART NUMBER	1 2 3 4 5 6 7 NOMENCLATURE	UNITS PER ASSY.	USABLE ON CODE	S/C NO.
306	209-54026-51	CONSOLE ASSEMBLY, RH forward	1	HJ	
	209-54026-61	CONSOLE ASSEMBLY, RH forward	1	FL	
-1	209-54027-31	. PLATE ASSEMBLY, RH forward console	1	HJ	
-2	209-54027-41	. PLATE ASSEMBLY, RH forward console	1	FL	
-3	98265-2-170	. . STUD (UC) (61864)	2	FR	
	99836	. . PIN (UC) (61864)	2	FR	
-4	98265-2-200	. . STUD (UC) (61864)	1	FR	
	99836	. . PIN (UC) (61864)	1	FR	
-5	PF3-1/2-38	. . FASTENER (DZ) (72794)	6	FR	
	PS3-1/2	. . SPRING (DZ) (72794)	6	FR	
	PC3-1/2	. . CUP (DZ) (72794)	6	FR	
-6	209-54028	. PLATE ASSEMBLY, RH forward console lighting	1	HJ	374
-7	209-54028-11	. PLATE ASSEMBLY, RH forward console lighting	1	FL	
-8	165-54039-19	. . GUARD, Electrical test switch (superseded by 244-954001 (NA Dwg Design Spec) for future procurement) (165-54039-19 not to be used for replacement on any aircraft)	1	NU	
	244-954001	. . GUARD, Electrical test switch (NA Dwg Design Spec) (supersedes 165-54039-19 for future procurement) (165-54039-19 not to be used for replacement on any aircraft)	1	NV	
-9	AN3027-11	. SWITCH (generator reset)	1	FL	
-10	AN3027-8	. SWITCH (canopy defrost)	1	FR	
-11	AN3027-8	. SWITCH (defrost)	1	FR	
-12	AN3027-3	. SWITCH (windshield anti-ice)	1	FR	
-13	AN3021-2	. SWITCH (pitot heater)	1	FR	
-14	AN3021-2	. SWITCH (stand-by compass and range indicator)	1	FR	
-15	AN3022-2	. SWITCH (cockpit floodlight)	1	FR	
-16	AN3021-1	. SWITCH (instrument floodlight)	1	FR	
-17	14PB1	. SWITCH (warning light test) (MCS) (91929)	1	FR	
-18	1AT3	. SWITCH (console floodlight) (MCS) (91929)	1	FR	
	AN507-632R7	. SCREW	2	FR	
	AN508-4-3	. SCREW	1	FR	
-19	AN3224-2	. BOOT	1	FR	
-20	8775K8	. SWITCH (instrument AC power) (CUT) (15605)(superseded by MS25029-5 for future procurement)	1	FR	
	MS25029-5	. SWITCH (instrument AC power) (supersedes 8775K8 (CUT) (15605) for future procurement)	1	FR	
	AN507-632R8	. SCREW	2	FR	
-21	8905K780	. SWITCH (battery and generator) (CUT) (15605)	1	FR	
	AN507-632R8	. SCREW	2	FR	
-22	MS25010-3A	. LIGHT ASSEMBLY	15	HJ	374
	MS25010-3A	. LIGHT ASSEMBLY	14	FL	
	2W1AL30-22-16	. WASHER, Plain (NA) (89372)	15	HJ	
	2W1AL30-22-16	. WASHER, Plain (NA) (89372)	14	FL	
-23	209-54184-3	. CAP ASSEMBLY, Warning light (instrument power off)	1	FR	
	AN3121-313	. LAMP	2	FR	
	204AE	. BASE (KOR) (75397)	1	FR	
-24	209-54184-17	. CAP ASSEMBLY, Warning light (generator out)	1	FR	
	AM3121-313	. LAMP	2	FR	
	204AB	. BASE (KOR) (75397)	1	FR	
-25	194-54054	. KNOB ASSEMBLY, Light rheostat	2	FR	
-26	AN565D8H6	. . SETSCREW	1	FR	
-27	AN565D8H3	. . SETSCREW	1	FR	
-28	AN507-440-6	. . SCREW	2	FR	
-29	194-51127	. . HANDLE, Cockpit temperature control knob	1	FR	
-30	194-54055-1	. . PLATE, Light rheostat knob	1	FR	
-31	CM11029	. RESISTOR, Variable (instrument light rheostat) (CLR) (12697)	1	FR	
-32	CM11030	. RESISTOR, Variable (console and floodlight rheostat) (CLR) (12697)	1	FR	
-33	RW30G101	. RESISTOR (console floodlight)	1	FR	
-34	RW30G630	. RESISTOR (instrument floodlight)	1	FR	
-35	RW30G350	. RESISTOR (console floodlight)	1	FR	
-36	AN365-832	. NUT	3	FR	
-37	2W18-8L	. WASHER, Flat (NA) (89372)	6	FR	
-38	2W1P12-18-63	. WASHER, Plain (NA) (89372)	6	FR	
-39	AN507-832R24	. SCREW	3	FR	
-40	AN515-6R7	. SCREW	36	FR	
-41	1J1-3-66	. JUMPER, Wire (NA) (89372)	1	FR	
	ATTACHING PARTS				
	AN365-1032	. NUT	1	FR	
	2W1AL14-14-16	. WASHER, Plain (NA) (89372)	1	FR	
	2W18-10M	. WASHER, Flat (NA) (89372)	1	FR	
	AN507-1032R10	. SCREW	1	FR	
	---*---				
-42	MS25017-5	. CIRCUIT BREAKER (inverter warning)	1	FR	
-43	MS25017-5	. CIRCUIT BREAKER (instrument light)	1	FR	
-44	MS25017-5	. CIRCUIT BREAKER (AN/APG-30A)	1	FR	
-45	MS25017-5	. CIRCUIT BREAKER (gunsight)	1	FR	
-46	MS25017-5	. CIRCUIT BREAKER (AN/APX-6B)	1	FR	
-47	MS25017-5	. CIRCUIT BREAKER (warning light test and rudder pedal shaker)	1	FR	
-48	MS25017-5	. CIRCUIT BREAKER (console light)	1	FR	
-49	MS25017-5	. CIRCUIT BREAKER (console floodlight)	1	FR	
-50	MS25017-5	. CIRCUIT BREAKER (instrument floodlight and cockpit floodlight)	1	FR	
-51	MS25017-5	. CIRCUIT BREAKER (fire detector power)	1	FR	
-52	MS25017-5	. CIRCUIT BREAKER (AN/ARA-25 radio)	1	FR	

RH FORWARD CONSOLE ASSEMBLY - APPLICABLE TO AIRCRAFT CODED (FR)

FIGURE & INDEX NO.	PART NUMBER	1	2	3	4	5	6	7	NOMENCLATURE	UNITS PER ASSY.	USABLE ON CODE	S/C NO.
306-53	MS25017-10	.							CIRCUIT BREAKER (arresting hook)	1	FR	
-54	MS25017-10	.							CIRCUIT BREAKER (exterior light)	1	FR	
-55	MS25017-5	.							CIRCUIT BREAKER (gyro horizon)	1	FR	
-56	MS25017-10	.							CIRCUIT BREAKER (defrost and anti-ice)	1	FR	
-57	MS25017-15	.							CIRCUIT BREAKER (fuselage signal light)	1	FR	
-58	MS25017-15	.							CIRCUIT BREAKER (seat actuator and utility receptacle)	1	FR	
-59	MS25017-15	.							CIRCUIT BREAKER (pitot heater)	1	FR	
-60	194-54059-19	.							BAR, Electrical bus	2	FR	
-61	181-54677-41	.							BUS BAR ASSEMBLY, Electrical circuit breaker	1	FR	
	181-54677-35	.	.						BUS BAR, Electrical circuit breaker	1	FR	
	181-54677-37	.	.						GLASS FABRIC	4	FR	
	181-54677-39	.	.						GLASS FABRIC	1	FR	
-62	194-54059-21	.							BAR, Electrical bus	9	FR	

RH RADIO COMPARTMENT ELECTRICAL JUNCTION BOX AND COVER - APPLICABLE TO AIRCRAFT CODED (FR)

FIGURE & INDEX NO.	PART NUMBER	1 2 3 4 5 6 7 NOMENCLATURE	UNITS PER ASSY.	USABLE ON CODE
309	209-54163-31	COVER ASSEMBLY, RH radio compartment electrical junction box complete	1	NX
	209-54163-41	COVER ASSEMBLY, RH radio compartment electrical junction box complete	1	NW
	ATTACHING PARTS			
	AN515-8R7	SCREW	5	FR
	2W18-8L	WASHER, Flat (NA)	5	FR
	---*---			
-1	209-54162-9	. COVER, RH radio compartment electrical junction box	1	NX
	209-54162-13	. COVER, RH radio compartment electrical junction box	1	NW
-2	181-54677-36	. BUS BAR ASSEMBLY, Electrical circuit breaker	2	FR
-3	MS25017-25	. CIRCUIT BREAKER (RH inboard ammo boost)	1	FR
-4	MS25017-25	. CIRCUIT BREAKER (RH outboard ammo boost)	1	FR
-5	MS25017-25	. CIRCUIT BREAKER (LH inboard ammo boost)	1	FR
-6	MS25017-25	. CIRCUIT BREAKER (LH outboard ammo boost)	1	FR
-7	MS25017-20	. CIRCUIT BREAKER (landing light power)	1	FR
-8	MS25017-5	. CIRCUIT BREAKER (radio navigation test)	1	FR
	ATTACHING PARTS			
	AN515-6R6	. SCREW	12	FR
	---*---			
	209-54161-51	BOX ASSEMBLY, Radio compartment electrical junction RH	1	NX
	209-54161-61	BOX ASSEMBLY, Radio compartment electrical junction RH	1	NW
	ATTACHING PARTS			
	AN520-10R8	SCREW	6	FR
	2W18-10M	WASHER, Flat (NA)	6	FR
	---*---			
-9	209-54160-101	. BOX ASSEMBLY, RH radio compartment electrical junction RH	1	NX
	209-54160-401	. BOX ASSEMBLY, RH radio compartment electrical junction RH	1	NW
-10	AN364-632	. NUT	2	FR
-11	2W18-6	. WASHER, Flat (NA)	4	FR
-12	AN515-6R6	. SCREW	2	FR
-13	D379	. RECTIFIER (ITRC)	1	FR
	ATTACHING PARTS			
-14	AN364-832	. NUT	1	FR
-15	2W18-8L	. WASHER, Flat (NA)	2	FR
	---*---			
-16	AN3350-2	. RELAY (forward fuel boost pump)	1	FR
-17	AN3350-2	. RELAY (inboard RH gun booster)	1	FR
-18	AN3350-2	. RELAY (fuselage signal light)	1	FR
-19	AN3350-2	. RELAY (outboard RH gun booster)	1	FR
-20	AN3350-2	. RELAY (aft fuel boost pump)	1	FR
	ATTACHING PARTS			
	AN515-8R8	. SCREW	10	FR
	2W18-8L	. WASHER, Flat (NA)	10	FR
	---*---			
-21	7064-208	. RELAY (aft fuel transfer pump) (LR)	1	FR
-22	7064-208	. RELAY (wing fuel transfer pump) (LR)	1	FR
	ATTACHING PARTS			
	AN515-8R8	. SCREW	4	FR
	2W1AL13-14-65	. WASHER, Plain (NA)	2	FR
	2W18-8L	. WASHER, Flat (NA)	2	FR
	---*---			
-23	9057-48F	. RELAY (canopy seal depressurization control) (LR)	1	FR
-24	9057-48F	. RELAY (lateral trim indicator control) (LR)	1	FR
	ATTACHING PARTS			
	AN515-8R8	. SCREW	4	FR
	2W18-8L	. WASHER, Flat (NA)	4	FR
	---*---			
-25	AN3311-1	. RELAY (wing scavenger air shutoff control)	1	FR
-26	AN3311-1	. RELAY (low fuel sensing)	1	FR
	ATTACHING PARTS			
	AN515-8R8	. SCREW	4	FR
	2W18-8L	. WASHER, Flat (NA)	4	FR
	---*---			
-27	AN3311-2	. RELAY (dual level float test)	1	NW
	ATTACHING PARTS			
	AN515-8R8	. SCREW	2	NW
	2W18-8L	. WASHER, Flat (NA)	2	NW
	---*---			
-28	1J1-2-3-14	. JUMPER, Wire (NA)	1	FR
-29	1J1-2-3-12	. JUMPER, Wire (NA)	1	FR
-30	295202-20B	. GROMMET (MKL)	1	FR

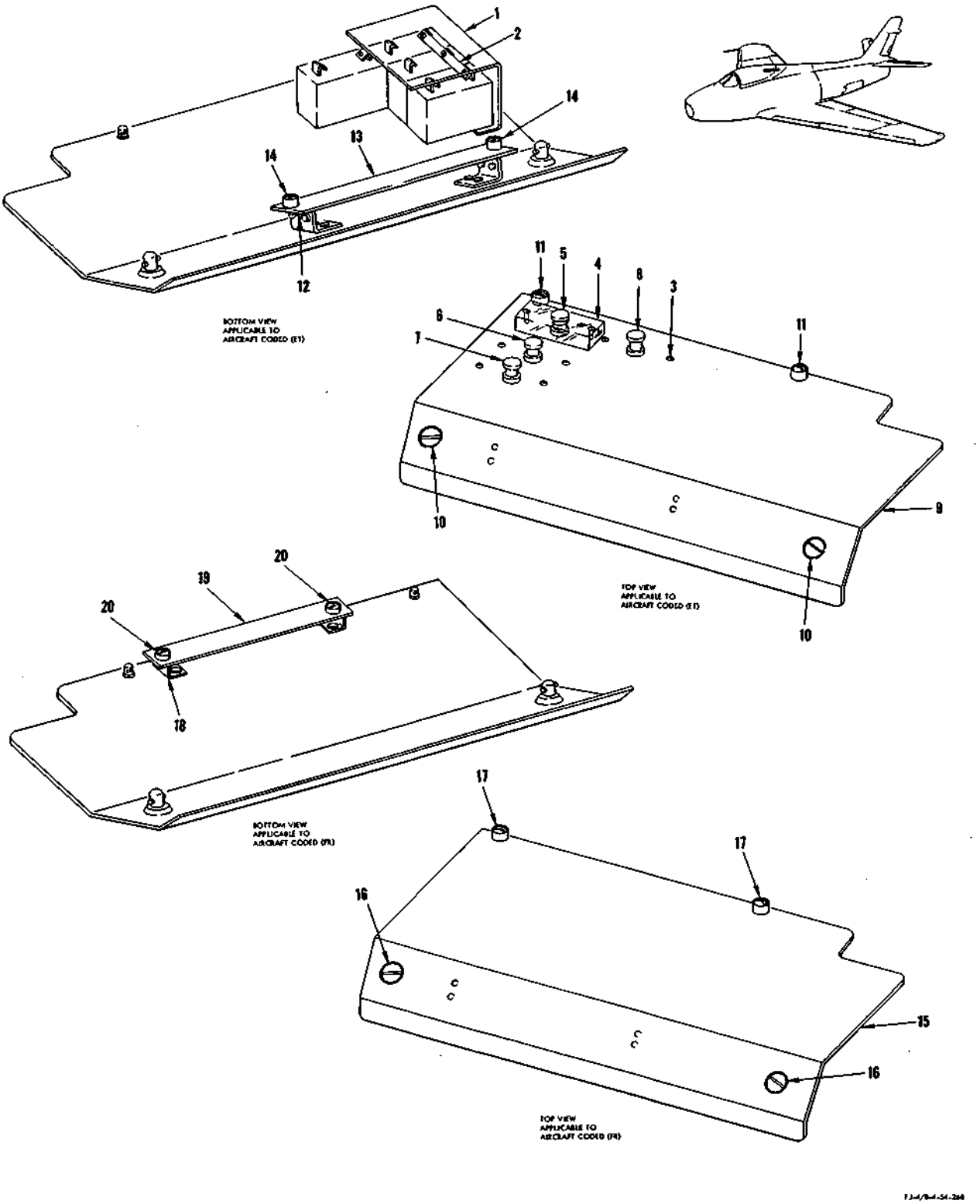

FIGURE 310 - PILOTS RH REAR CONSOLE PANEL ASSEMBLY

PILOTS RH REAR CONSOLE PANEL ASSEMBLY

FIGURE & INDEX NO.	PART NUMBER	1 2 3 4 5 6 7 NOMENCLATURE	UNITS PER ASSY.	USABLE ON CODE	S/C NO.
310	209-54458	PANEL ASSEMBLY, Pilots console RH rear	1	ET	
-1	187-54997-3	. SHIELD, Electric circuit breaker protector	1	ET	
-2	194-54059-5	. BAR, Electric bus	1	ET	
-3	AN515-6R7	. SCREW	6	ET	
	2W18-6	. WASHER, Flat (NA) (89372)	6	ET	
-4	209-54176	. GUARD, Fuel boost power	1	ET	
	AN507-6R13	. SCREW	2	ET	
-5	94	. CIRCUIT BREAKER (aft fuel boost pump) (MEH) (76374)	1	ET	
-6	94	. CIRCUIT BREAKER (aft fuel transfer pump) (MEH) (76374)	1	ET	
-7	94	. CIRCUIT BREAKER (wing fuel transfer pump) (MEH) (76374)	1	ET	
-8	94	. CIRCUIT BREAKER (forward fuel boost pump) (MEH) (76374)	1	ET	
	181-53175-31	. PLATE ASSEMBLY, Pilots console RH rear	1	ET	
-9	181-53175-9	. . PLATE, Pilots console RH rear plate assembly	1	ET	
-10	98265-2-.190	. . STUD (UC) (61864)	2	ET	
	99836	. . PIN (UC) (61864)	2	ET	
-11	PF3-1/2-38	. . STUD (DZ) (72794)	2	ET	
	PS3-1/2	. . SPRING (DZ) (72794)	2	ET	
	PC3-1/2	. . CUP (DZ) (72794)	2	ET	
-12	PRB3-1/2	. . RECEPTACLE (DZ) (72794)	2	ET	
-13	194-71215	. . PANEL ASSEMBLY, Radio control RH console close-out	1	ET	
-14	PF3-1/2-38	. . . STUD (DZ) (72794)	2	ET	
	PS3-1/2	. . . SPRING (DZ) (72794)	2	ET	
	PC3-1/2	. . . CUP (DZ) (72794)	2	ET	
	181-53175-41	PLATE ASSEMBLY, Pilots console RH rear	1	FR	
-15	181-53175-7	. PLATE, Pilots console RH rear plate assembly	1	FR	
-16	98265-2-.190	. STUD (UC) (61864)	2	FR	
	99836	. PIN (UC) (61864)	2	FR	
-17	PF3-1/2-38	. STUD (DZ) (72794)	2	FR	
	PS3-1/2	. SPRING (DZ) (72794)	2	FR	
	PC3-1/2	. CUP (DZ) (72794)	2	FR	
-18	PRB3-1/2	. RECEPTACLE (DZ) (72794)	2	FR	
-19	194-71215	. PANEL ASSEMBLY, Radio control RH console close-out	1	FR	
-20	PF3-1/2-38	. . STUD (DZ) (72794)	2	FR	
	PS3-1/2	. . SPRING (DZ) (72794)	2	FR	
	PC3-1/2	. . CUP (DZ) (72794)	2	FR	

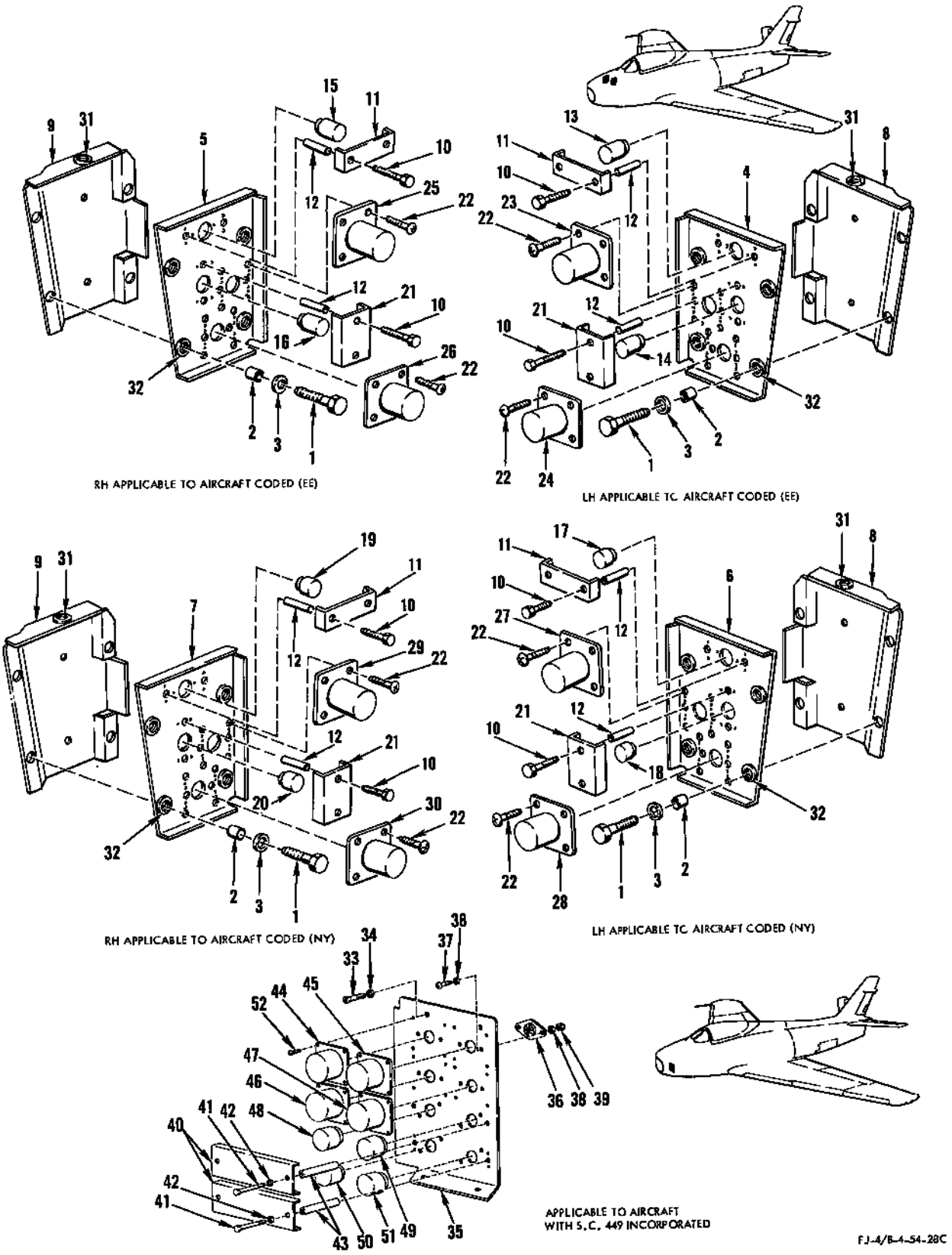

FIGURE 311 - GUN FIRING UNIT - APPLICABLE TO AIRCRAFT CODED (NH)

GUN FIRING UNIT - APPLICABLE TO AIRCRAFT CODED (NH)

FIGURE & INDEX NO.	PART NUMBER	1 2 3 4 5 6 7 NOMENCLATURE	UNITS PER ASSY.	USABLE ON CODE	S/C NO.
311	209-54067-1	PANEL ASSEMBLY, Gun firing unit LH	1	EE	449
	209-54067-2	PANEL ASSEMBLY, Gun firing unit RH	1	EE	449
	209-54067-101	PANEL ASSEMBLY, Gun firing unit LH	1	NY	449
	209-54067-102	PANEL ASSEMBLY, Gun firing unit RH	1	NY	449
	ATTACHING PARTS				
-1	AN3-7A	BOLT	4	NH	449
-2	NAS43DD3-21	SPACER	4	NH	449
-3	2W1AL14-26-40	WASHER, Plain (NA) (89372)	4	NH	449
	---*---				
-4	209-54068-1	. PANEL ASSEMBLY, Gun firing control LH	1	EE	449
-5	209-54068-2	. PANEL ASSEMBLY, Gun firing control RH	1	EE	449
-6	209-54068-101	. PANEL ASSEMBLY, Gun firing control LH	1	NY	449
-7	209-54068-102	. PANEL ASSEMBLY, Gun firing control RH	1	NY	449
	209-54068-3	. . PANEL, Gun firing control panel assembly LH	1	EE	449
	209-54068-4	. . PANEL, Gun firing control panel assembly RH	1	EE	449
	209-54068-5	. . PANEL, Gun firing control panel assembly LH	1	NY	449
	209-54068-6	. . PANEL, Gun firing control panel assembly RH	1	NY	449
-8	209-54128-1	. INSULATOR, Gun firing control panel LH	1	NH	449
-9	209-54128-2	. INSULATOR, Gun firing control panel RH	1	NH	449
-10	AN3-25A	. BOLT	4	NH	449
-11	181-54069	. BRACKET ASSEMBLY, Gun firing power unit hold-down	1	NH	449
	181-54069-3	. . BRACKET, Gun firing power unit hold-down bracket assembly	1	NH	449
	181-54069-5	. . BLOCK, Gun firing power unit hold-down bracket assembly	1	NH	449
-12	NAS43DD3-140	. SPACER	4		449
-13	No Number	. POWER SUPPLY (Aero 2A) (left inboard power) (GFP)	1	EE	449
-14	No Number	. POWER SUPPLY (Aero 2A) (left outboard power) (GFP)	1	EE	449
-15	No Number	. POWER SUPPLY (Aero 2A) (right inboard power) (GFP)	1	EE	449
-16	No Number	. POWER SUPPLY (Aero 2A) (right outboard power) (GFP)	1	EE	449
-17	No Number	. CONTROL JUMPER PLUG (Aero 2A) (left inboard jumper plug) (GFP)	1	NY	449
-18	No Number	. CONTROL JUMPER PLUG (Aero 2A) (left outboard jumper plug) (GFP)	1	NY	449
-19	No Number	. CONTROL JUMPER PLUG (Aero 2A) (right inboard jumper plug) (GFP)	1	NY	449
-20	No Number	. CONTROL JUMPER PLUG (Aero 2A) (right outboard jumper plug) (GFP)	1	NY	449
-21	209-54069	. BRACKET ASSEMBLY, Gun firing power unit hold-down	1	NH	449
	209-54069-3	. . BRACKET, Gun firing power unit hold-down bracket assembly	1	NH	449
	209-54069-5	. . BLOCK, Gun firing power unit hold-down bracket assembly	1	NH	449
-22	AN515-6R7	. SCREW	8	NH	449
-23	No Number	. CONTROL UNIT (Aero 1B) (left inboard control) (GFP)	1	EE	449
-24	No Number	. CONTROL UNIT (Aero 1B) (left outboard control) (GFP)	1	EE	449
-25	No Number	. CONTROL UNIT (Aero 1B) (right inboard control) (GFP)	1	EE	449
-26	No Number	. CONTROL UNIT (Aero 1B) (right outboard control) (GFP)	1	EE	449
-27	No Number	. CONTROL UNIT (Aero 2A) (left inboard control) (GFP)	1	NY	449
-28	No Number	. CONTROL UNIT (Aero 2A) (left outboard control) (GFP)	1	NY	449
-29	No Number	. CONTROL UNIT (Aero 2A) (right inboard control) (GFP)	1	NY	449
-30	No Number	. CONTROL UNIT (Aero 2A) (right outboard control) (GFP)	1	NY	449
-31	295202-8A	. GROMMET (MKL) (76530)	1	NH	449
-32	AN931-5-9	. GROMMET	4	NH	449
	209-540171	. PANEL ASSEMBLY, Electrical Aero 2A gun firing unit	1	NH	
	ATTACHING PARTS				
-33	AN520-10R8	SCREW	4	NH	
-34	2W18-10M	WASHER, Flat (NA) (89372)	4	NH	
	---*---				
	209-540172	. PANEL ASSEMBLY, Electrical Aero 2A gun firing unit	1	NH	
-35	244-54011	. . PANEL ASSEMBLY, Electrical Aero 2A gun firing unit	1	NH	
-36	77M1P-8T	. . . SOCKET (AMP) (02660)	8	NH	
	ATTACHING PARTS				
-37	AN507-632R6	. . . SCREW	16	NH	
-38	2W18-6L	. . . WASHER, Flat (NA) (89372)	32	NH	
-39	AN365-632	. . . NUT	16	NH	
	---*---				
-40	209-54069-11	. . BRACKET ASSEMBLY, Gun firing power unit hold-down	2	NH	
-41	AN3-25A	. . BOLT	4	NH	
-42	2W18-10M	. . WASHER, Flat (NA) (89372)	4	NH	
-43	NAS43DD3-140	. . SPACER	4	NH	
-44	No Number	. . CONTROL UNIT (Aero 2A) (left inboard control) (GFP)	1	FL	
	No Number	. . CONTROL UNIT (Aero 1B) (left inboard control) (GFP)	1	EE	
-45	No Number	. . CONTROL UNIT (Aero 2A) (left outboard control) (GFP)	1	FL	
	No Number	. . CONTROL UNIT (Aero 1B) (left outboard control) (GFP)	1	EE	
-46	No Number	. . CONTROL UNIT (Aero 2A) (right inboard control) (GFP)	1	FL	
	No Number	. . CONTROL UNIT (Aero 1B) (right inboard control) (GFP)	1	EE	
-47	No Number	. . CONTROL UNIT (Aero 2A) (right outboard control) (GFP)	1	FL	
	No Number	. . CONTROL UNIT (Aero 1B) (right outboard control) (GFP)	1	EE	
-48	No Number	. . CONTROL JUMPER PLUG (Aero 2A) (left inboard) (GFP)	1	FL	
	No Number	. . CONTROL POWER SUPPLY (Aero 2A) (left inboard) (GFP)	1	EE	
-49	No Number	. . CONTROL JUMPER PLUG (Aero 2A) (left outboard) (GFP)	1	FL	
	No Number	. . CONTROL POWER SUPPLY (Aero 2A) (left outboard) (GFP)	1	EE	
-50	No Number	. . CONTROL JUMPER PLUG (Aero 2A) (right inboard) (GFP)	1	FL	
	No Number	. . CONTROL POWER SUPPLY (Aero 2A) (right inboard) (GFP)	1	EE	
-51	No Number	. . CONTROL JUMPER PLUG (Aero 2A) (right outboard) (GFP)	1	FL	
	No Number	. . CONTROL POWER SUPPLY (Aero 2A) (right outboard) (GFP)	1	EE	
-52	AN515-6R7	. . SCREW	16	NH	
	209-540163-11	. WIRE HARNESS, Electrical Aero 2A gun firing control	1	NH	

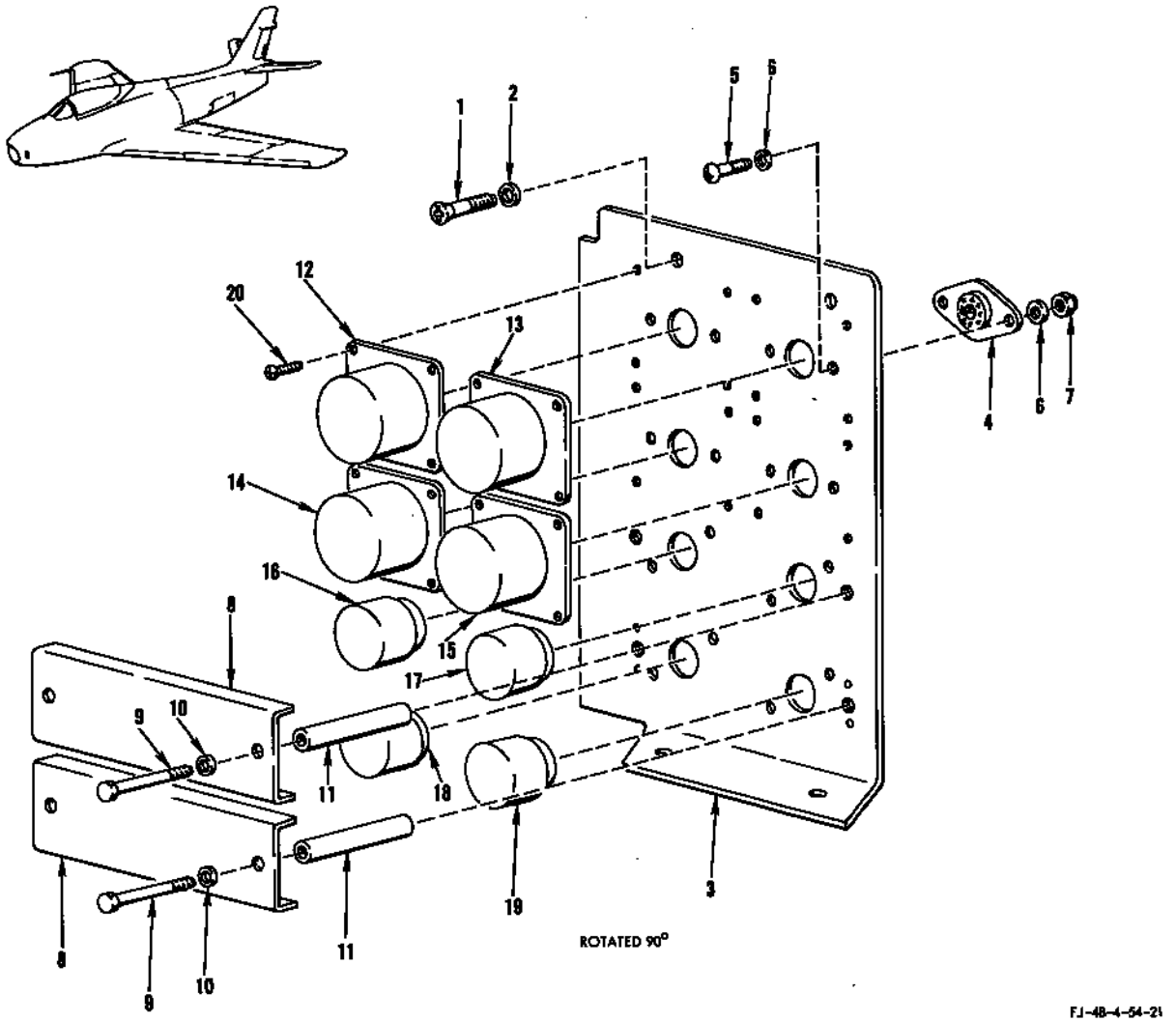

FIGURE 312 - GUN FIRING UNIT - APPLICABLE TO AIRCRAFT CODED (ME)

FIGURE & INDEX NO.	PART NUMBER	1	2	3	4	5	6	7	NOMENCLATURE	UNITS PER ASSY.	USABLE ON CODE
312	244-54010								PANEL ASSEMBLY, Electrical Aero-2A gun firing unit	1	ME
	ATTACHING PARTS										
-1	AN520-10R6								SCREW	4	ME
-2	2W18-10M								WASHER, Flat (NA)	4	ME
	---*---										
-3	244-54011		.						PANEL ASSEMBLY, Electrical Aero-2A gun firing control	1	ME
-4	77M1P-8T		.	.					SOCKET (AMP)	8	ME
	ATTACHING PARTS										
-5	AN507-632R6		.	.					SCREW	16	ME
-6	2W18-6L		.	.					WASHER, Flat (NA)	32	ME
-7	AN365-632		.	.					NUT	16	ME
	---*---										
-8	209-54069-11		.						BRACKET ASSEMBLY, Gun firing power unit hold-down	2	ME
-9	AN3-25A		.						BOLT	4	ME
-10	2W18-10M		.						WASHER, Flat (NA)	4	ME
-11	NAS43DD3-140		.						SPACER	4	ME
-12	No Number		.						CONTROL UNIT (Aero 2A) (left inboard control) (GFP)	1	ME
-13	No Number		.						CONTROL UNIT (Aero 2A) (left outboard control) (GFP)	1	ME
-14	No Number		.						CONTROL UNIT (Aero 2A) (right inboard control) (GFP)	1	ME
-15	No Number		.						CONTROL UNIT (Aero 2A) (right outboard control) (GFP)	1	ME
-16	No Number		.						CONTROL JUMPER PLUG (Aero 2A) (left inboard) (GFP)	1	ME
-17	No Number		.						CONTROL JUMPER PLUG (Aero 2A) (left outboard) (GFP)	1	ME
-18	No Number		.						CONTROL JUMPER PLUG (Aero 2A) (right inboard) (GFP)	1	ME
-19	No Number		.						CONTROL JUMPER PLUG (Aero 2A) (right outboard) (GFP)	1	ME
-20	AN515-6R7		.						SCREW	16	ME

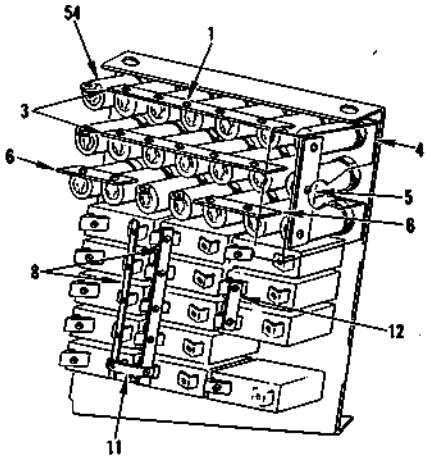

BACK VIEW
APPLICABLE TO AIRCRAFT
CODED (LP)

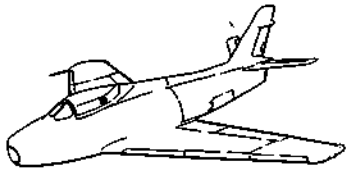

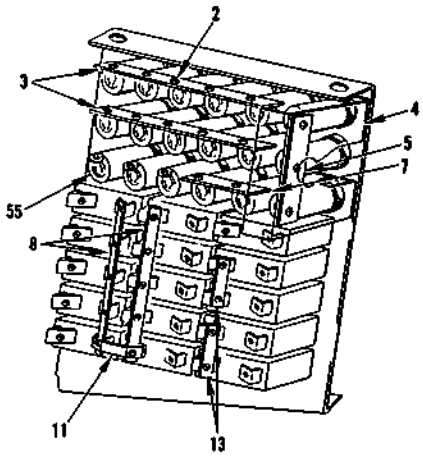

BACK VIEW
APPLICABLE TO AIRCRAFT CODED (DS)

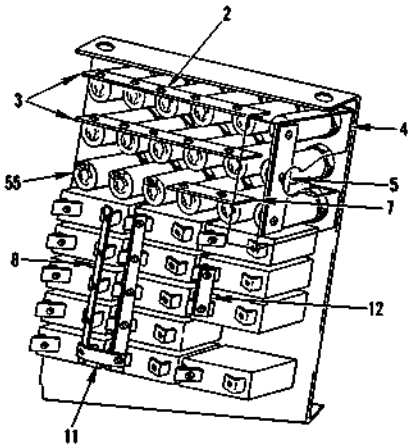

BACK VIEW
APPLICABLE TO AIRCRAFT
CODED (MW, JB)

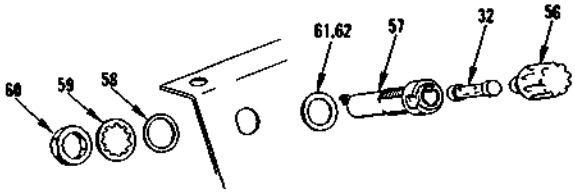

TYPICAL FUSEPOST BREAKDOWN.

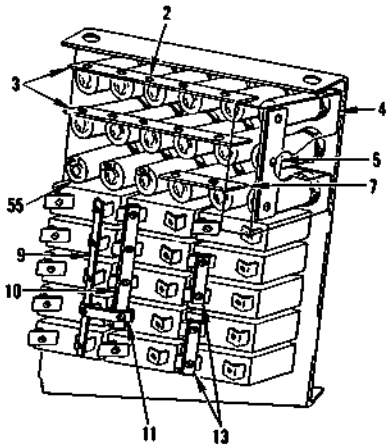

BACK VIEW
APPLICABLE TO AIRCRAFT
CODED (FX, DT, DU)

FJ-4-4-54-88A

FIGURE 314 - RH REAR COCKPIT CIRCUIT BREAKER AND FUSE PANEL ASSEMBLY - APPLICABLE TO AIRCRAFT CODED (ET) (Sheet 2)

RH REAR COCKPIT CIRCUIT BREAKER AND FUSE PANEL ASSEMBLY - APPLICABLE TO AIRCRAFT CODED (ET)

FIGURE & INDEX NO.	PART NUMBER	1 2 3 4 5 6 7 NOMENCLATURE	UNITS PER ASSY.	USABLE ON CODE	S/C NO.
314	209-54189	PANEL ASSEMBLY, Circuit breaker and fuse cockpit RH rear complete	1	MW	357, 410
	209-54189-201	PANEL ASSEMBLY, Circuit breaker and fuse cockpit RH rear complete	1	DS	357, 410
	209-54189-301	PANEL ASSEMBLY, Circuit breaker and fuse cockpit RH rear complete	1	JB	357, 410
	209-54189-401	PANEL ASSEMBLY, Circuit breaker and fuse cockpit RH rear complete	1	FX	357
	209-54189-501	PANEL ASSEMBLY, Circuit breaker and fuse cockpit RH rear complete	1	DT	357
	209-54189-601	PANEL ASSEMBLY, Circuit breaker and fuse cockpit RH rear complete	1	DU	357
	209-54189-701	PANEL ASSEMBLY, Circuit breaker and fuse cockpit RH rear complete	1	LP	357
-1	AN515-4R5	. SCREW	17	LP	
	2W1AL8-8-16	. WASHER, Plain (NA) (89372)	34	LP	
	AN365-440	. NUT	17	LP	
-2	AN515-4R5	. SCREW	15	LW	
	2W1AL8-8-16	. WASHER, Plain (NA) (89372)	30	LW	
	AN365-440	. NUT	15	LW	
-3	194-54059-15	. BAR, Electrical bus	2	ET	
-4	209-54340	. GUARD, RH aft fuselage station 105	1	ET	
-5	194-54059-13	. BAR, Electrical bus	1	ET	
-6	194-54059-11	. BAR, Electrical bus	2	LP	
-7	194-54059-11	. BAR, Electrical bus	1	LW	
-8	194-54059-27	. BAR, Electrical bus	2	U	
-9	194-54059-27	. BAR, Electrical bus	1	GA	410
-10	194-54059-25	. BAR, Electrical bus	1	GA	410
-11	194-54059-18	. BAR, Electrical bus	1	ET	
-12	194-54059-21	. BAR, Electrical bus	1	Y	
-13	194-54059-21	. BAR, Electrical bus	2	FS	
-14	90	. CIRCUIT BREAKER (gun purge control) (MEH) (76374)	1	ET	
-15	90	. CIRCUIT BREAKER (LABS power) (MEH) (76374)	1	ET	
-16	96	. CIRCUIT BREAKER (T-208 power) (MEH) (76374)	1	ET	
-17	90	. CIRCUIT BREAKER (gyro horizon) (MEH) (76374)	1	FS	266
-18	94	. CIRCUIT BREAKER (stores jettison) (MEH) (76374)	1	ET	
-19	90	. CIRCUIT BREAKER (flap and leading edge droop indicator) (MEH) (76374)	1	ET	
-20	90	. CIRCUIT BREAKER (ground firing control and flight control pressure warning (MEH) (76374)	1	DH	402
-21	90	. CIRCUIT BREAKER (flight control and pressure warning) (MEH) (76374)	1	HH	
-22	90	. CIRCUIT BREAKER (compass controller) (MEH) (76374)	1	ET	
-23	95	. CIRCUIT BREAKER (T-208 emergency power) (MEH) (76374)	1	ET	
-24	92	. CIRCUIT BREAKER (rocket and bomb select and bomb warning) (MEH) (76374)	1	ET	
-25	90	. CIRCUIT BREAKER (angle of attack indicator) (MEH) (76374)	1	ET	
-26	90	. CIRCUIT BREAKER (angle of attack heater) (MEH) (76374)	1	ET	
-27	90	. CIRCUIT BREAKER (angle of yaw heater) (MEH) (76374)	1	ET	
-28	91	. CIRCUIT BREAKER (utility receptacle and fuel dump) (MEH) (76374)	1	ET	466
-29	90	. CIRCUIT BREAKER (oil pressure indicator and trim indicator and landing gear position indicator) (MEH) (76374)	1	ET	
-30	AN515-6R7	. SCREW	28	Y	
-31	AN515-6R7	. SCREW	30	FS	
-32	312001	. FUSE (fuel flowmeter) (LTF) (75915)	1	ET	
-33	312001	. FUSE (instrument transformer) (LTF) (75915)	1	ET	
-34	313001	. FUSE (directional gyro phase C) (LTF) (75915)	1	ET	
-35	313001	. FUSE (compass coupler phase C) (LTF) (75915)	1	ET	
-36	312001	. FUSE (gyro horizon phase C) (LTF) (75915)	1	ET	
-37	312001	. FUSE (inverter warning phase C) (LTF) (75915)	1	BR	
-38	312001	. FUSE (inverter warning phase C and oxygen indicator) (LTF) (75915)	1	FX	
-39	312001	. FUSE (yaw damper phase A) (LTF) (75915)	1	LP	
-40	312001	. FUSE (RMI indicator) (LTF) (75915)	1	ET	
-41	312001	. FUSE (angle of attack) (LTF) (75915)	1	ET	
-42	313001	. FUSE (compass coupler phase A) (LTF) (75915)	1	ET	
-43	312001	. FUSE (inverter warning phase A) (LTF) (75915)	1	ET	
-44	313001	. FUSE (directional gyro phase A) (LTF) (75915)	1	ET	
-45	312001	. FUSE (gyro horizon phase A) (LTF) (75915)	1	ET	
-46	312001	. FUSE (yaw damper phase B) (LTF) (75915)	1	LP	
-47	312001	. FUSE (hydraulic pressure indicator) (LTF) (75915)	1	ET	
-48	312003	. FUSE (T-208 power) (LTF) (75915)	1	ET	
-49	312001	. FUSE (RH gun power) (LTF) (75915)	1	ET	
-50	312001	. FUSE (LH gun power) (LTF) (75915)	1	ET	
-51	312001	. FUSE (LABS power) (LTF) (75915)	1	ET	
-52	312003	. FUSE (missile power) (LTF) (75915)	1	ET	
-53	312001	. FUSE (yaw damper phase C) (LTF) (75915)	1	LP	
-54	342001	. 3AG EXTRACTOR, Fuse post (LTF) (75915)	21	LP	
-55	342001	. 3AG EXTRACTOR, Fuse post (LTF) (75915)	18	LW	
-56	342001-SA2	. . KNOB, Subassembly (LTF) (75915)	1	ET	
-57	342001-SA1	. . BODY, Subassembly (LTF) (75915)	1	ET	
-58	901-2	. . WASHER (LTF) (75915)	1	ET	
-59	905-3	. . LOCK WASHER (LTF) (75915)	1	ET	
-60	903-12	. . NUT (LTF) (75915)	1	ET	
-61	2W1AL34-24-20	. WASHER, Plain (NA) (89372)	21	LP	
-62	2W1AL34-24-20	. WASHER, Plain (NA) (89372)	18	LW	
-63	AN520-10R8	. SCREW	1	ET	
	2W18-10M	. WASHER, Flat (NA) (89372)	1	ET	
-64	AN3-3A	. BOLT	2	ET	
-65	2W18-10M	. WASHER, Flat (NA) (89372)	2	ET	
-66	70G175	. TRANSFORMER (26 volt instrument) (GEMI) (98863) (superseded by 9T39Y5 (GEMI) (98863) for future procurement)	1	ET	

RH REAR COCKPIT CIRCUIT BREAKER AND FUSE PANEL ASSEMBLY - APPLICABLE TO AIRCRAFT CODED (ET)

FIGURE & INDEX NO.	PART NUMBER	1 2 3 4 5 6 7 NOMENCLATURE	UNITS PER ASSY.	USABLE ON CODE	S/C NO.
314	9T39Y5	. TRANSFORMER (26 volt instrument) (GEMI) (98863) (supersedes 70G175 (GEMI) (98863) for future procurement) (interchangeable with 70G175 (GEMI) (98863) until stock is exhausted)	1	ET	
	181-54213	. SHIM, Transformer mounting	1	ET	
-67	AN365-1032	. NUT	2	ET	
-68	2W18-10M	. WASHER, Flat (NA) (89372)	4	ET	
-69	AN520-10R10	. SCREW	2	ET	
-70	AN3311-2	. RELAY (IFF and UHF transfer)	1	ET	
-71	AN365-832	. NUT	1	ET	
-72	2W18-8L	. WASHER, Flat (NA) (89372)	4	ET	
-73	AN515-8R8	. SCREW	2	ET	
-74	209-54187	. COVER ASSEMBLY, Circuit breaker and fuse cockpit RH rear	1	ET	
-75	209-54188	. PANEL SIDE ASSEMBLY, Circuit breaker and fuse cockpit RH rear side	1	ET	
-76	PF3-1/2-38	. . FASTENER (DZ) (72794)	2	ET	
	PC3-1/2	. . CUP (DZ) (72794)	2	ET	
	PS3-1/2	. . SPRING (DZ) (72794)	2	ET	
-77	209-54186	. PANEL ASSEMBLY, Circuit breaker and fuse cockpit RH rear	1	MW	357
-78	209-54186-101	. PANEL ASSEMBLY, Circuit breaker and fuse cockpit RH rear	1	DV	357
-79	209-54186-201	. PANEL ASSEMBLY, Circuit breaker and fuse cockpit RH rear	1	JB	357
-80	209-54186-401	. PANEL ASSEMBLY, Circuit breaker and fuse cockpit RH rear	1	FX	357
-81	209-54186-501	. PANEL ASSEMBLY, Circuit breaker and fuse cockpit RH rear	1	DU	357
-82	209-54186-701	. PANEL ASSEMBLY, Circuit breaker and fuse cockpit RH rear	1	LP	357
-83	PF3-1/2-38	. . FASTENER (DZ) (72794)	3	ET	
	PC3-1/2	. . CUP (DZ) (72794)	3	ET	
	PS3-1/2	. . SPRING (DZ) (72794)	3	ET	

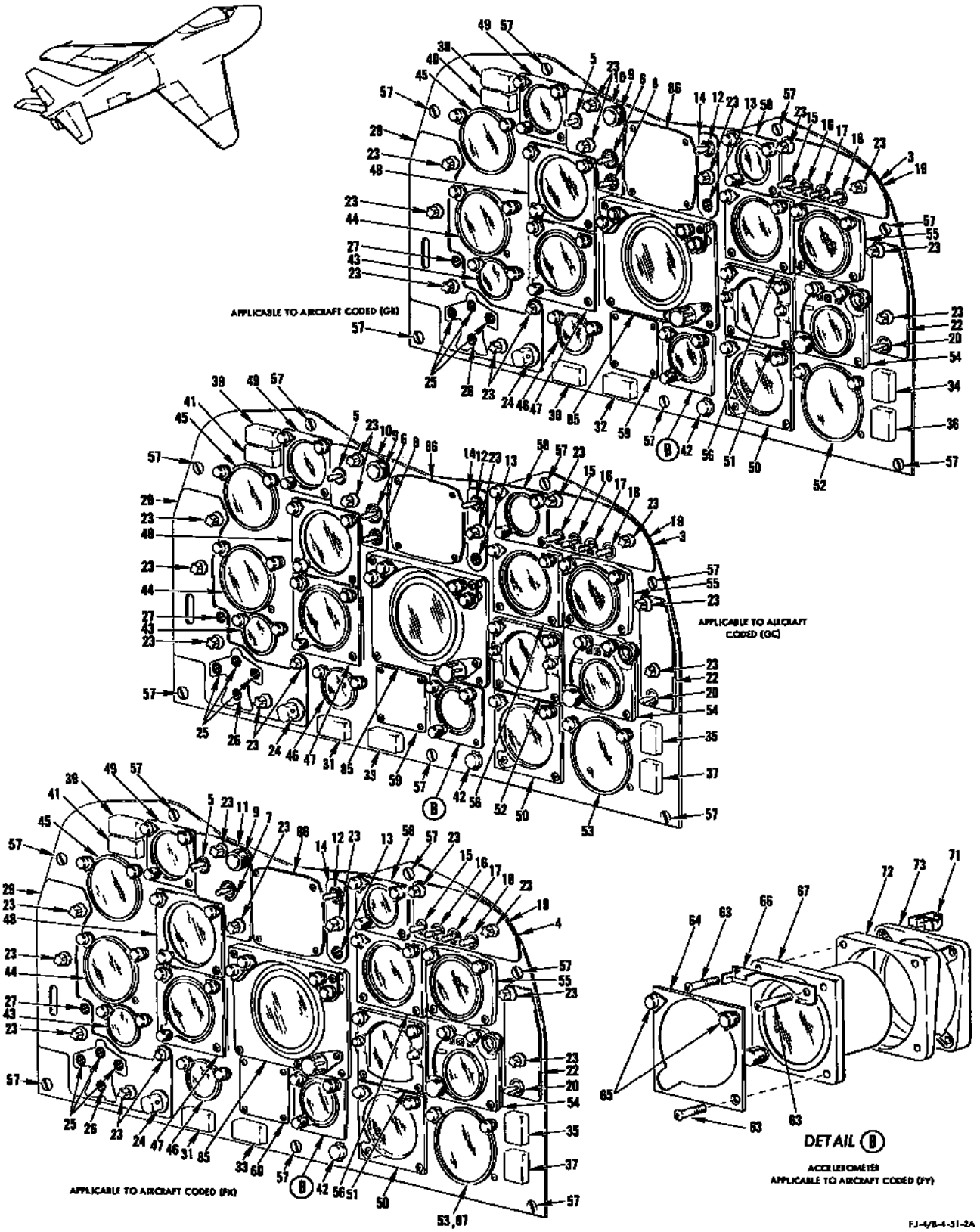

FIGURE 315 - PILOTS INSTRUMENT PANEL ASSEMBLY - APPLICABLE TO AIRCRAFT CODED (ET) (Sheet 1)

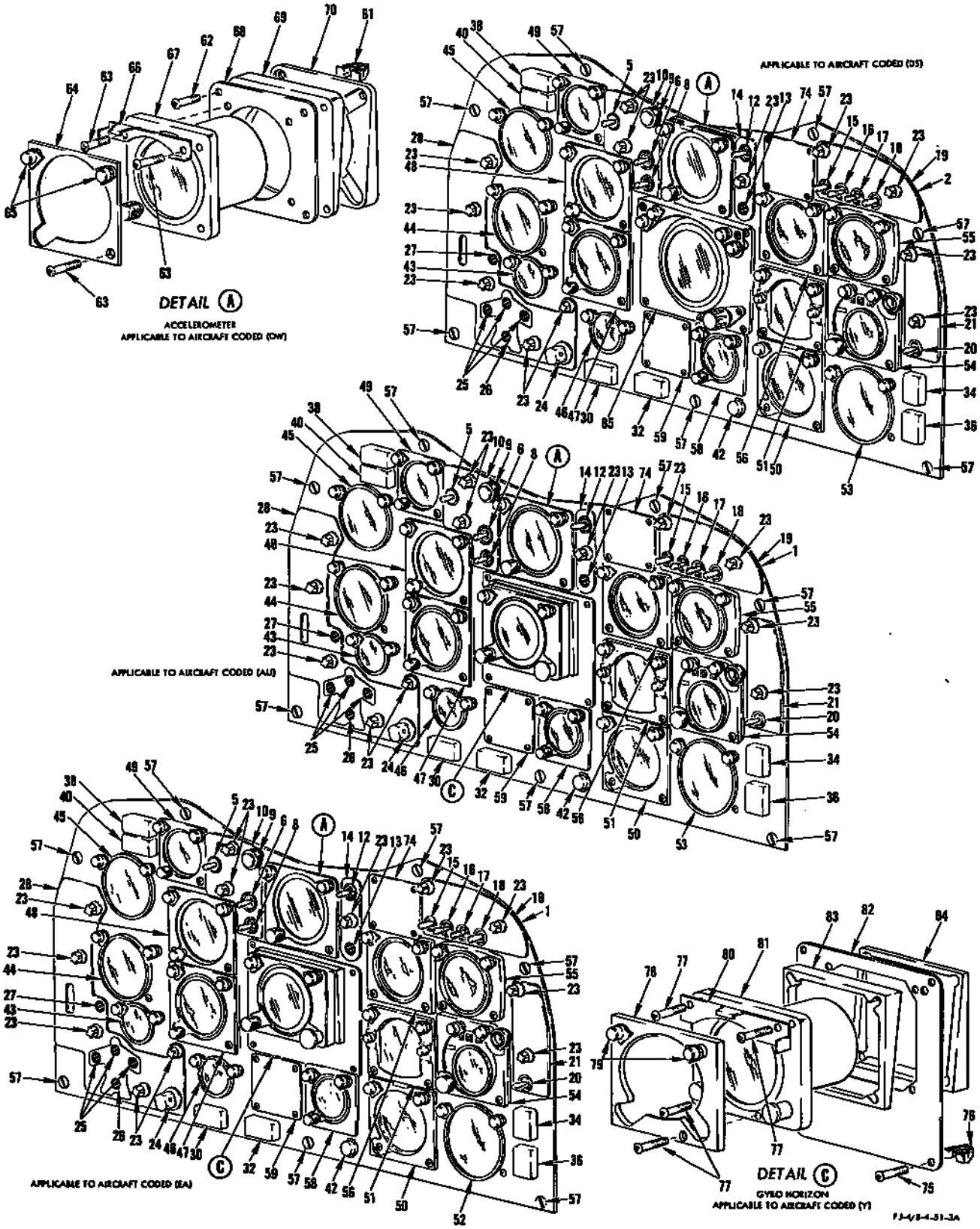

FIGURE 315 - PILOTS INSTRUMENT PANEL ASSEMBLY - APPLICABLE TO AIRCRAFT CODED (ET) (Sheet 2)

PILOTS INSTRUMENT PANEL ASSEMBLY - APPLICABLE TO AIRCRAFT CODED (ET)

FIGURE & INDEX NO.	PART NUMBER	1 2 3 4 5 6 7 NOMENCLATURE	UNITS PER ASSY.	USABLE ON CODE	S/C NO.
315	209-51005	PANEL ASSEMBLY, Pilots instrument complete	1	EA	
	209-51005-101	PANEL ASSEMBLY, Pilots instrument complete	1	AU	
	209-51005-201	PANEL ASSEMBLY, Pilots instrument complete	1	DS	
	209-51005-301	PANEL ASSEMBLY, Pilots instrument complete	1	DL	
	209-51005-401	PANEL ASSEMBLY, Pilots instrument complete	1	FM	451
	209-51005-501	PANEL ASSEMBLY, Pilots instrument complete	1	FH	451
		. PILOTS INSTRUMENT PANEL ASSEMBLY (REAR EQUIPMENT) (see figure 317 for breakdown)			
-1	209-51003	. PANEL ASSEMBLY, Pilots instrument	1	CM	
-2	209-51003-11	. PANEL ASSEMBLY, Pilots instrument	1	DS	
-3	209-51003-21	. PANEL ASSEMBLY, Pilots instrument	1	DL	
-4	209-51003-31	. PANEL ASSEMBLY, Pilots instrument	1	FX	
-5	1AT3	. SWITCH (angle select) (MCS) (91929)	1	ET	
-6	8858K7	. SWITCH (LABS start) (CUT) (15605)	1	BR	
-7	8859K7	. SWITCH (LABS start) (CUT) (15605)	1	FX	
-8	138604	. SWITCH (manual yaw and roll) (UCI) (78947)	1	BR	
	AN936A716BS	. WASHER	1	BR	
	2W1AL30-22-016	. WASHER, Plain (NA) (89372)	1	BR	
-9	MS25041-2	. LIGHT (LABS indicator)	1	ET	
-10	209-51133	. PANEL, LABS instrument panel cover lighting	1	BR	
-11	209-51133-5	. PANEL, LABS instrument panel cover lighting	1	FX	
-12	AN3027-6	. SWITCH (fire detector test)	1	ET	
-13	8DJ51GBH-4	. INDICATOR (take-off trim) (GEMI) (98863)	1	FZ	
	SP103-11	. INDICATOR (take-off trim) (KWC) (75312)	1	CM	
	7S13CN632-4A	. SCREW, 100° flush head corrosion-resistant (NA) (89372)	2	ET	
-14	209-51134	. PANEL, Fire detector test and take-off trim	1	ET	
-15	AN3022-2	. SWITCH (armament master)	1	ET	
	7S13CN632-7A	. SCREW, 100° flush head corrosion-resistant (NA) (89372)	2	ET	
-16	AN3160-5	. SWITCH (inboard gun selector)	1	ET	
	7S13CN632-7A	. SCREW, 100° flush head corrosion-resistant (NA) (89372)	2	ET	
-17	AN3160-5	. SWITCH (outboard gun selector)	1	ET	
	7S13CN632-7A	. SCREW, 100° flush head corrosion-resistant (NA) (89372)	2	ET	
-18	AN3027-2	. SWITCH (gun control)	1	ET	
-19	209-51027	. PLATE, Instrument panel armament control switch	1	ET	
-20	AN3027-8	. SWITCH (fuel gage check)	1	ET	
-21	209-51018	. PLATE, Take-off check list fuel gage check	1	DW	403
-22	209-51018-3	. PLATE, Take-off check list fuel gage check	1	FY	
-23	MS25010-3A	. LIGHT	12	ET	
	2W1AL30-22-16	. WASHER, Plain (NA) (89372)	12	ET	
-24	209-51010	. KNOB ASSEMBLY, Hydraulic pressure selector switch	1	ET	
	FS-77	. SWITCH (hydraulic pressure selector) (PLL) (77326)	1	ET	
-25	SP103-14	. INDICATOR (landing gear position) (KWC) (75312)	3	GM	
	8DJ51GBB-4	. INDICATOR (landing gear position) (GEMI) (98863) (for breakdown see Technical Manual AN 05-55A-14)	3	FZ	
	7S13CN632-4A	. SCREW, 100° flush head corrosion-resistant (NA) (89372)	6	ET	
-26	8DJ51GBE-4	. INDICATOR (flap position) (GEMI) (98863) (for breakdown see Technical Manual AN 05-55A-11)	1	ET	
	7S13CN632-4A	. SCREW, 100° flush head corrosion-resistant (NA) (89372)	2	ET	460
-27	SP103-16	. INDICATOR (oil pressure) (KWC) (75312)	1	GM	460
	8DJ51GBL-4	. INDICATOR (oil pressure) (GEMI) (98863) (for breakdown see Technical Manual AN 05-55A-11)	1	FZ	460
	7S13CN632-4A	. SCREW, 100° flush head corrosion-resistant (NA) (89372)	2	ET	
-28	209-51044	. PLATE, Hydraulic and oil pressure position indicating and landing check list	1	DW	403
-29	209-51044-3	. PLATE, Hydraulic and oil pressure position indicating and landing check list	1	FY	460
-30	181-540102-39	. CAP ASSEMBLY, Warning light (flight control pressure)	1	U	
	204	. BASE (KOR) (75397)	1	U	
	AN3121-313	. LAMP	2	U	
-31	209-54184-39	. CAP ASSEMBLY, Warning light (flight control pressure)	1	GA	
	204AC	. BASE (KOR) (75397)	1	GA	
	AN3121-313	. LAMP	2	GA	
-32	181-540102-13	. CAP ASSEMBLY, Warning light (windshield anti-ice overheat)	1	U	
	204	. BASE (KOR) (75397)	1	U	
	AN3121-313	. LAMP	2	U	
-33	209-54184-13	. CAP ASSEMBLY, Warning light (windshield anti-ice overheat)	1	GA	
	204AG	. BASE (KOR) (75397)	1	GA	
	AN3121-313	. LAMP	2	GA	
-34	181-540102-33	. CAP ASSEMBLY, Warning light (wing fuel shutoff)	1	U	466
	204	. BASE (KOR) (75397)	1	U	466
	AN3121-313	. LAMP	2	U	466
-35	209-54184-33	. CAP ASSEMBLY, Warning light (wing fuel shutoff)	1	GA	466
	204AJ	. BASE (KOR) (75397)	1	GA	466
	AN3121-313	. LAMP	2	GA	466
-36	181-540102-15	. CAP ASSEMBLY, Warning light (low fuel)	1	U	
	204	. BASE (KOR) (75397)	1	U	
	AN3121-313	. LAMP	2	U	
-37	209-54184-15	. CAP ASSEMBLY, Warning light (low fuel)	1	GA	
	204AD	. BASE (KOR) (75397)	1	GA	
	AN3121-313	. LAMP	2	GA	
-38	181-540102-9	. CAP ASSEMBLY, Warning light (fire compressor)	1	U	
	204	. BASE (KOR) (75397)	1	U	
	AN3121-313	. LAMP	2	U	

PILOTS INSTRUMENT PANEL ASSEMBLY - APPLICABLE TO AIRCRAFT CODED (ET)

FIGURE & INDEX NO.	PART NUMBER	1 2 3 4 5 6 7	NOMENCLATURE	UNITS PER ASSY.	USABLE ON CODE	S/C NO.
315-39	209-54184-9	.	CAP ASSEMBLY, Warning light (fire compressor)	1	GA	
	204AH	.	BASE (KOR) (75397)	1	GA	
	AN3121-313	.	LAMP	2	GA	
-40	181-540102-11	.	CAP ASSEMBLY, Warning light (fire burner)	1	U	
	204	.	BASE (KOR) (75397)	1	U	
	AN3121-313	.	LAMP	2	U	
-41	209-54184-11	.	CAP ASSEMBLY, Warning light (fire burner)	1	GA	
	204AF	.	BASE (KOR) (75397)	1	GA	
	AN3121-313	.	LAMP	2	GA	
-42	AN3178-1	.	HOLDER (spare lamp)	1	ET	
	AN3140-327	.	LAMP	4	ET	
-43	25101-B16A1-B1	.	INDICATOR (fuel flow) (ECP) (19315) (MIL-I-6599A (ASG)) (Navy Stock No. R881-1206-100)	1	ET	
	A-6745-24	.	LIGHT FIXTURE (GMC)(72914) (includes lamp) (for fixture less lamp order part number A-6745 (GMC) (72914))	2	ET	
	AN3140-327	.	. LAMP	1	ET	
-44	172B2	.	INDICATOR (exhaust temperature) (LEN) (35918) (MIL-I-25026) (for breakdown see Technical Manual NA 05-40DB-507)	1	ET	
	A-6815-24	.	LIGHT FIXTURE (GMC) (72914) (includes lamp) (for fixture less lamp order part number A-6815 (GMC) (72914)	2	ET	
	AN3140-327	.	. LAMP	1	ET	
-45	MS28033-1	.	TACHOMETER, Engine indicator (GFP)	1	ET	
	A-6815-24	.	LIGHT FIXTURE (GMC) (72914) (includes lamp) (for fixture less lamp order part number A-6815 (GMC) (72914))	2	ET	
	AN3140-327	.	. LAMP	1	ET	
-46	25602-A37C-7-A1	.	INDICATOR (hydaulic oil pressure) (ECP) (19315) (for breakdown see Technical Manual NA 05-55B-568)	1	ET	
	A-6745-24	.	LIGHT FIXTURE (GMC) (72914) (includes lamp) (for fixture less lamp order part number A-6745 (GMC) (72914))	2	ET	
	AN3140-327	.	. LAMP	1	ET	
-47	AN5760L4B	.	ALTIMETER (GFP)	1	ET	
	B-6601	.	LIGHT FIXTURE (GMC) (72914)	1	ET	
	AN3140-327	.	. LAMP	2	ET	
	7S14CN632-16A	.	SCREW, Round head corrosion-resistant (NA) (89372)	3	ET	
	A6939-632-24A	.	SPEED NUT (TIN) (78553)	3	ET	
-48	No Number	.	INDICATOR (airspeed) (GFP) (MIL-I-7633 (AER) -1) (Navy Stock No. R88110474-100)	1	ET	
	B-6601	.	LIGHT FIXTURE (GMC) (72914)	1	ET	
	AN3140-327	.	. LAMP	2	ET	
	7S14CN632-16A	.	SCREW, Round head corrosion-resistant (NA) (89372)	3	ET	
	A6939-632-24A	.	SPEED NUT (TIN) (78553)	3	ET	
-49	SLZ2167	.	INDICATOR (angle of attack) (SLZ) (78423) (superseded by SLZ 9036 (SLZ) (78423) for future procurement) (for breakdown see Technical Manual NA 05-20NB-513)	1	ET	
	SLZ9036	.	INDICATOR (angle of attack) (SLZ) (78423) (supersedes SLZ 2167 (SLZ) (78423) for future procurement) (for breakdown see Technical Manual NA 05-20NB-514)	1	ET	
	B-6621	.	LIGHT FIXTURE (GMC) (72914)	1	ET	
	AN3140-327	.	. LAMP	2	ET	
	7S14CN632-14A	.	SCREW, Round head corrosion-resistant (NA) (89372)	3	ET	
	A6939-632-24A	.	SPEED NUT (TIN) (78553)	3	ET	
-50	AN5825-7	.	INDICATOR (rate of climb) (GFP)	1	ET	
	B-6601	.	LIGHT FIXTURE (GMC) (72914)	1	ET	
	AN3140-327	.	. LAMP	2	ET	
	7S14CN632-16A	.	SCREW, Round head corrosion-resistant (NA) (89372)	3	ET	
	A6939-632-24A	.	SPEED NUT (TIN) (78553)	3	ET	
-51	AN5820T2	.	INDICATOR (turn and bank) (GFP)	1	ET	
	B-6602	.	LIGHT FIXTURE (GMC) (72914)	1	ET	
	AN3140-327	.	. LAMP	4	ET	
	7S14CN632-16A	.	SCREW, Round head corrosion-resistant (NA) (89372)	4	ET	
	A6939-632-24A	.	SPEED NUT (TIN) (78553)	4	ET	
-52	EA856-AA-1S-5	.	INDICATOR (fuel capacity) (LI) (36536)	1	AT	397
-53	EA858-FAF-19	.	INDICATOR (fuel capacity) (LI) (36536)	1	MT	397, 451
	A6815-24	.	LIGHT FIXTURE (GMC) (72914) (includes lamp) (for fixture less lamp order part number A-6815 (GMC) (72914)	2	ET	
	AN3140-327	.	. LAMP	1	ET	
-54	1D249B/ARN	.	INDICATOR (course) (GFP)	1	ET	
	B-6603	.	LIGHT FIXTURE (GMC) (72914)	1	ET	
	AN3140-327	.	. LAMP	2	ET	
	7S14CN632-17A	.	SCREW, Round head corrosion-resistant (NA) (89372)	2	ET	
	A6939-632-24A	.	SPEED NUT (TIN) (78553)	2	ET	
-55	MS28027-1	.	INDICATOR (radio magnetic course) (GFP)	1	ET	
	B-6600	.	LIGHT FIXTURE (GMC) (72914)	1	ET	
	AN3140-327	.	. LAMP	2	ET	
	7S14CN632-16A	.	SCREW, Round head corrosion-resistant (NA) (89372)	4	ET	
	A6939-632-24A	.	SPEED NUT (TIN) (78553)	4	ET	
-56	1D310/ARN-21	.	INDICATOR (range) (GFP) (for breakdown see Technical Manual NA 16-351D310-502)	1	ET	
	B-6600	.	LIGHT FIXTURE (GMC) (72914)	1	ET	
	AN3140-327	.	. LAMP	2	ET	
	7S14CN632-17A	.	SCREW, Round head corrosion-resistant (NA) (89372)	4	ET	
	A6939-632-24A	.	SPEED NUT (TIN) (78553)	4	ET	
-57	UF5T20	.	STUD (DZ) (72794)	7	ET	

PILOTS INSTRUMENT PANEL ASSEMBLY - APPLICABLE TO AIRCRAFT CODED (ET)

FIGURE & INDEX NO.	PART NUMBER	1	2	3	4	5	6	7	NOMENCLATURE	UNITS PER ASSY.	USABLE ON CODE	S/C NO.
315	GH5	.							GROMMET (DZ) (72794)	7	ET	
-58	AN5743L2	.							CLOCK (GFP)	1	ET	
	B-6621	.							LIGHT FIXTURE (GMC) (72914)	1	ET	
	AN3140-327	.	.						LAMP	2	ET	
	7S14CN632-14A	.							SCREW, Round head corrosion-resistant (NA) (89372)	3	ET	
	A6939-632-24A	.							SPEED NUT (TIN) (78553)	3	ET	
-59	209-51039	.							PLATE ASSEMBLY, Instrument panel LABS timer mounting hole cover	1	BR	
	7S14CN632-8A	.							SCREW, Round head corrosion-resistant (NA) (89372)	4	BR	
	A6939-632-24A	.							SPEED NUT (TIN) (78553)	4	BR	
-60	209-51144-11	.							PLATE, Instrument panel LABS timer mounting hole cover	1	FX	
-61	A6939-632-24A	.							SPEED NUT (TIN) (78553)	6	DW	
-62	7S14CN632-16A	.							SCREW, Round head corrosion-resistant (NA) (89372)	3	DW	
-63	7S14CN632-22A	.							SCREW, Round head corrosion-resistant (NA) (89372)	3	ET	
-64	B-6621	.							LIGHT FIXTURE (GMC) (72914)	1	ET	
-65	AN3140-327	.	.						LAMP	2	ET	
-66	A-6683	.	.						MOUNTING CLIP (GMC) (72914)	1	ET	
-67	MS28025-1	.							ACCELEROMETER (GFP)	1	ET	
-68	209-51113	.							PLATE, Instrument panel accelerometer	1	DW	
-69	209-51112-3	.							ADAPTER, Instrument panel accelerometer	1	DW	
-70	209-51112-5	.							ADAPTER, Instrument panel accelerometer	1	DW	
-71	A6939-632-24A	.							SPEED NUT (TIN) (78553)	3	FV	
-72	187-51011-3	.							ADAPTER, Instrument panel accelerometer	1	FY	
-73	187-51011-5	.							ADAPTER, Instrument panel accelerometer	1	FY	
-74	209-51196	.							PLATE, Instrument mounting hole	1	DW	
-75	7S14CN632-16A	.							SCREW, Round head corrosion-resistant (NA) (89372)	4	CM	
-76	A6939-632-24A	.							SPEED NUT (TIN) (78553)	8	CM	
-77	7S14CN632-26A	.							SCREW, Round head corrosion-resistant (NA) (89372)	4	CM	266
-78	B-6606	.							LIGHT FIXTURE (GMC) (72914)	1	CM	266
-79	AN3140-327	.	.						LAMP	2	CM	266
-80	A-6648	.	.						MOUNTING CLIP (GMC) (72914)	1	CM	266
-81	No Number	.							INDICATOR (gyro horizon) (Navy Stock No. R88H332-025) (MIL-I-7906 (AER)) (GFP)	1	CM	266
-82	209-51037	.							PLATE, Instrument panel type J-8 attitude gyro adapter	1	CM	266
-83	187-51012-3	.							ADAPTER, Instrument panel attitude indicator	1	CM	266
-84	187-51012-5	.							ADAPTER, Instrument panel attitude indicator	1	CM	266
-85	105759-01	.							INDICATOR ASSEMBLY, Vertical gyro type MM-1 Model 978R (GFP) (LA) (35351) (for breakdown see Technical Manual NA05-20GE-507)	1	FZ	
	B-4789	.							LIGHT FIXTURE (GMC) (72914)	1	FZ	
	334	.	.						LAMP (GMC) (72914) (Navy Stock No. R17L2128)	4	FZ	
	7S14CN632-16A	.							SCREW, Round head corrosion-resistant (NA) (89372)	4	FZ	
	A6939-632-24A	.							SPEED NUT (TIN) (78553)	4	FZ	
-86	209-51034	.							PLATE ASSEMBLY, Dive and roll indicator mounting hole cover	1	FY	
-87	EA856MFC-20	.							INDICATOR (fuel capacity) (LI) (36536)	1	FH	
	A-6815-24	.							LIGHT FIXTURE (GMC) (72914) (includes lamp) (for fixture less lamp order part number A-6815 (GMC) (72914)	2	ET	
	AN3140-327	.	.						LAMP	1	ET	

PILOTS INSTRUMENT PANEL ASSEMBLY - APPLICABLE TO AIRCRAFT CODED (FR)

FIGURE & INDEX NO.	PART NUMBER	1 2 3 4 5 6 7 NOMENCLATURE	UNITS PER ASSY.	USABLE ON CODE	S/C NO.
318	209-510108	PANEL ASSEMBLY, Pilots instrument complete	1	MD	
	209-510108-11	PANEL ASSEMBLY, Pilots instrument complete	1	ME	
-1	209-510107	. PANEL ASSEMBLY, Pilots instrument	1	MD	
-2	209-510107-21	. PANEL ASSEMBLY, Pilots instrument	1	ME	
-3	1AT3	. SWITCH (angle select) (MCS) (91929)	1	FR	
	ATTACHING PARTS				
	7S13CN632-7A	. SCREW, 100° flush head corrosion-resistant (NA) (89372)	2	FR	
	---*---				
-4	MS25041-2	. LIGHT (LABS indicator)	1	FR	
-5	8DJ51GBF-4	. INDICATOR (speed brake forward) (GEMI) (98863)	1	FR	
	ATTACHING PARTS				
	7S13CN632-4A	. SCREW, 100° flush head corrosion-resistant (NA) (89372)	2	FR	
	---*---				
-6	209-510109	. PANEL, LABS and speed brake lighting	1	FR	
-7	AN3027-6	. SWITCH (fire detector test)	1	FR	
-8	8DJ51GBF-4	. INDICATOR (speed brake aft) (GEMI) (98863)	1	FR	
	ATTACHING PARTS				
	7S13CN632-4A	. SCREW, 100° flush head corrosion-resistant (NA) (89372)	2	FR	
	---*---				
-9	209-510114	. PANEL, Fire detector test and speed brake	1	FR	
-10	AN3022-2	. SWITCH (armament master)	1	FR	
	ATTACHING PARTS				
	7S13CN632-7A	. SCREW, 100° flush head corrosion-resistant (NA) (89372)	2	FR	
	---*---				
-11	AN3160-5	. CIRCUIT BREAKER, Switch type (inboard gun selector)	1	FR	
	ATTACHING PARTS				
	7S13CN632-7A	. SCREW, 100° flush head corrosion-resistant (NA) (89372)	2	FR	
	---*---				
-12	AN3160-5	. CIRCUIT BREAKER, Switch type (outboard gun selector)	1	FR	
	ATTACHING PARTS				
	7S13CN632-7A	. SCREW, 100° flush head corrosion-resistant (NA) (89372)	2	FR	
	---*---				
-13	AN3027-2	. SWITCH (gun control)	1	FR	
-14	209-51027-11	. PLATE, Instrument panel armament control switch	1	FR	
-15	AN3027-8	. SWITCH (fuel gage check)	1	FR	
-16	209-510110	. PANEL, Take off check list and fuel gage check	1	FR	
-17	MS25010-3A	. LIGHT	12	FR	
	2W1AL30-22-16	. WASHER, Plain (NA) (89372)	12	FR	
-18	209-51010	. KNOB ASSEMBLY, Hydraulic pressure selector switch	1	FR	
	FS-77	. SWITCH (hydraulic pressure selector) (PLL) (77326)	1	FR	
	ATTACHING PARTS				
	AN508-4-3	. SCREW	4	FR	
	---*---				
-19	8DJ51GBB-4	. INDICATOR (landing gear position) (GEMI) (98863)	3	FR	
	ATTACHING PARTS				
	7S13CN632-4A	. SCREW, 100° flush head corrosion-resistant (NA) (89372)	6	FR	
	---*---				
-20	8DJ51GBE-4	. INDICATOR (flap position) (GEMI) (98863)	1	FR	
	ATTACHING PARTS				
	7S13CN632-4A	. SCREW, 100° flush head corrosion-resistant (NA) (89372)	2	FR	
	---*---				
-21	8DJ51GBL-4	. INDICATOR (oil pressure) (GEMI) (98863)	1	MD	460 ■
	ATTACHING PARTS				
	7S13CN632-4A	. SCREW, 100° flush head corrosion-resistant (NA) (89372)	2	MD	460 ■
	---*---				
-22	SR-94A	. INDICATOR (oil pressure) (UG) (61349) (interchangeable with 26800-A65A-1-A2 (Montrose Division of Bendix Aviation Corp)	1	ME	
-23	A-5299-24	. LIGHT FIXTURE (GMC) (72914) (includes lamp) (for fixture less lamp order) - part number A-5299 (GMC) (72914)	1	ME	
	334	. . LAMP (GMC) (72914)	1	ME	
-24	209-510112	. PANEL, Flap oil pressure and hydraulic pressure selector	1	MD	460 ■
-25	209-510121	. PANEL, Instrument flap and hydraulic pressure selector	1	ME	
-26	209-510111	. PANEL, Landing check list	1	MD	460 ■
-27	209-510120	. PANEL, Landing check list	1	ME	
-28	209-54184-39	. CAP ASSEMBLY, Warning light (flight control pressure)	1	FR	
	204AC	. BASE (KOR) (81590)	1	FR	
	AN3121-313	. LAMP	2	FR	
-29	209-54184-13	. CAP ASSEMBLY, Warning light (windshield anti-ice overheat)	1	FR	
	204AG	. BASE (KOR) (81590)	1	FR	
	AN3121-313	. LAMP	2	FR	
-30	209-54184-41	. CAP ASSEMBLY, Warning light (manual fuel control)	1	FR	
	204AM	. BASE (KOR) (81590)	1	FR	
	AN3121-313	. LAMP	2	FR	
-31	209-54184-15	. CAP ASSEMBLY, Warning light (low fuel)	1	FR	
	204AD	. BASE (KOR) (81590)	1	FR	
	AN3121-313	. LAMP	2	FR	
-32	209-54184-9	. CAP ASSEMBLY, Warning light (fire compressor)	1	FR	
	204AH	. BASE (KOR) (81590)	1	FR	
	AN3121-313	. LAMP	2	FR	
-33	209-54184-11	. CAP ASSEMBLY, Warning light (fire burner)	1	FR	
	204AF	. BASE (KOR) (81590)	1	FR	
	AN3121-313	. LAMP	2	FR	
-34	AN3178-1	. HOLDER (spare lamp)	1	FR	
	AN3140-327	. LAMP	4	FR	

PILOTS INSTRUMENT PANEL ASSEMBLY - APPLICABLE TO AIRCRAFT CODED (FR)

FIGURE & INDEX NO.	PART NUMBER	1 2 3 4 5 6 7 NOMENCLATURE	UNITS PER ASSY.	USABLE ON CODE	S/C NO.
318-35	25101-B16A-1B1	. INDICATOR (fuel flow) (ECP) (19315) (MIL-I-6599) (ASG) (for breakdown see Technical Manual AN 05-55B-100)	1	HJ	
	No Number	. INDICATOR (fuel flow) (GFP)	1	FL	
-36	A-6745-24	. LIGHT FIXTURE (GMC) (72914) (includes lamp) (for fixture less lamp order part number A-6745 (GMC) (72914)	1	FR	
	AN3140-327	. . LAMP	1	FR	
-37	A-6745-24	. LIGHT FIXTURE (GMC) (72914) (includes lamp) (for fixture less lamp order part number A-6745 (GMC) (72914) (superseded by A-7505-24 (GMC) (72914) for future procurement)	1	MD	460
	AN3140-327	. . LAMP	1	MD	
	A-6747	. . LIGHT CAP, (GMC) (72914)	1	MD	460
-38	A-7505-24	. LIGHT FIXTURE (GMC) (72914) (includes lamp) (for fixture less lamp order part number A-7505 (GMC) (72914) (supersedes A-6745-24 (GMC) (72914) for future procurement)	1	ME	
	AN3140-327	. . LAMP	1	ME	
	A-7504	. . LIGHT CAP (GMC) (72914)	1	ME	
-39	172B2	. INDICATOR (exhaust temperature) (LEN) (35918) (MIL-I-25026) (for breakdown see Technical Manual NA 05-40DB-507)	1	FR	
	A-6815-24	. LIGHT FIXTURE (GMC) (72914) (includes lamp) (for fixture less lamp order part number A-6815 (GMC) (72914)	2	FR	
	AN3140-327	. . LAMP	1	FR	
-40	MS28033-1	. TACHOMETER, Engine indicator (GFP)	1	FR	
	A-6815-24	. LIGHT FIXTURE (GMC) (72914) (includes lamp) (for fixture less lamp order part number A-6815 (GMC) (72914)	2	FR	
	AN3140-327	. . LAMP	1	FR	
-41	25602-A37C-7-A1	. INDICATOR (dual hydraulic pressure) (ECP) (19315) (for breakdown see Technical Manual NA 05-55B-568)	1	FR	
	A-6745-24	. LIGHT FIXTURE (GMC) (72914) (includes lamp) (for fixture less lamp order part number A-6745 (GMC) (72914)	2	FR	
	AN3140-327	. . LAMP	1	FR	
-42	AN5760L4B	. ALTIMETER (GFP)	1	FR	
	ATTACHING PARTS				
	7S14CN632-16A	. SCREW, Round head corrosion-resistant (NA) (89372)	2	FR	
	7S14CN632-18A	. SCREW, Round head corrosion-resistant (NA) (89372)	1	FR	
	A6939-632-24A	. SPEED NUT (TIN) (78553)	3	FR	
	---*---				
	B-6601	. LIGHT FIXTURE (GMC) (72914)	1	FR	
	AN3140-327	. . LAMP	2	FR	
-43	No Number	. INDICATOR (airspeed) (GFP) (MIL-I-7833 (Aer) -1)	1	FR	
	ATTACHING PARTS				
	7S14CN632-16A	. SCREW, Round head corrosion-resistant (NA) (89372)	2	FR	
	7S14CN632-18A	. SCREW, Round head corrosion-resistant (NA) (89372)	1	FR	
	A6939-632-24A	. SPEED NUT (TIN) (78553)	3	FR	
	---*---				
	B-6601	. LIGHT FIXTURE (GMC) (72914)	1	FR	
	AN3140-327	. . LAMP	2	FR	
-44	SLZ9036	. INDICATOR (angle of attack) (SLZ) (78423) (for breakdown see Technical Manual NA 05-20NB-514)	1	FR	
	ATTACHING PARTS				
	7S14CN632-14A	. SCREW, Round head corrosion-resistant (NA) (89372)	3	FR	
	A-6939-632-24A	. SPEED NUT (TIN) (78553)	3	FR	
	---*---				
	B-6621	. LIGHT FIXTURE (GMC) (72914)	1	FR	
	AN3140-327	. . LAMP	2	FR	
-45	AN5743L2	. CLOCK (GFP)	1	FR	
	ATTACHING PARTS				
	7S14CN632-14A	. SCREW, Round head corrosion-resistant (NA) (89372)	3	FR	
	A6939-632-24A	. SPEED NUT (TIN) (78553)	3	FR	
	---*---				
	B-6621	. LIGHT FIXTURE (GMC) (72914)	1	FR	
	AN3140-327	. . LAMP	2	FR	
-46	105759-01	. INDICATOR ASSY, Vert gyro (type MM-1) (model 978R) (see Technical Manual NA 05-20GE-507)	1	FR	
	ATTACHING PARTS				
	7S14CN632-16A	. SCREW, Round head corrosion-resistant (NA) (89372)	2	FR	
	7S14CN632-22A	. SCREW, Round head corrosion-resistant (NA) (89372)	2	FR	
	A6939-632-24A	. SPEED NUT (TIN) (78553)	4	FR	
	---*---				
	B-4789	. LIGHT FIXTURE (GMC) (72914)	1	FR	
	334	. . LAMP (GMC) (72914)	4	FR	
-47	433421	. INDICATOR (dive and roll) (MHA) (94580) (GFP)	1	FR	
	ATTACHING PARTS				
	7S14CN632-16A	. SCREW, Round head corrosion-resistant (NA) (89372)	4	FR	
	A6939-632-24A	. SPEED NUT (TIN) (78553)	4	FR	
	---*---				
	B-6600	. LIGHT FIXTURE (GMC) (72914)	1	FR	
	AN3140-327	. . LAMP	2	FR	
-48	209-510119	. TIMER (LABS instrument) (rework of 441149-2 (MHA) (94580))	1	FR	
-49	ID310/ARN-21	. INDICATOR (range) (GFP) (for brkdn see TM NA 16-35ID310-502)	1	FR	
	ATTACHING PARTS				
	7S14CN632-17A	. SCREW, Round head corrosion-resistant (NA) (89372)	4	FR	
	A6939-632-24A	. SPEED NUT (TIN) (78553)	4	FR	
	---*---				
	B-6600	. LIGHT FIXTURE (GMC) (72914)	1	FR	
	AN3140-327	. . LAMP	2	FR	
-50	MS28027-1	. INDICATOR (radio magnetic course) (GFP)	1	FR	

PILOTS INSTRUMENT PANEL ASSEMBLY - APPLICABLE TO AIRCRAFT CODED (FR)

FIGURE & INDEX NO.	PART NUMBER	1 2 3 4 5 6 7	NOMENCLATURE	UNITS PER ASSY.	USABLE ON CODE	S/C NO.
318			ATTACHING PARTS			
	7S14CN632-16A	.	SCREW, Round head corrosion-resistant (NA) (89372)	4	FR	
	A6939-632-24A	.	SPEED NUT (TIN) (78553)	4	FR	
			---*---			
	B-6600	.	LIGHT FIXTURE (GMC) (72914)	1	FR	
	AN3140-327	.	. LAMP	2	FR	
-51	AN5825-7	.	INDICATOR (rate of climb) (GFP)	1	FR	
			ATTACHING PARTS			
	7S14CN632-16A	.	SCREW, Round head corrosion-resistant (NA) (89372)	2	FR	
	7S14CN632-18A	.	SCREW, Round head corrosion-resistant (NA) (89372)	1	FR	
	A6939-632-24A	.	SPEED NUT (TIN) (78553)	3	FR	
			---*---			
	B-6601	.	LIGHT FIXTURE (GMC) (72914)	1	FR	
	AN3140-327	.	. LAMP	2	FR	
-52	MS28025-1	.	ACCELEROMETER (GFP)	1	FR	
			ATTACHING PARTS			
	7S14CN632-22A	.	SCREW, Round head corrosion-resistant (NA) (89372)	3	FR	
	A6939-632-24A	.	SPEED NUT (TIN) (78553)	3	FR	
			---*---			
	B-6621	.	LIGHT FIXTURE (GMC) (72914) (superseded by B8720R (GMC) (72914) for future procurement)	1	MD	
	B8720R	.	LIGHT FIXTURE (GMC) (72914) (supersedes B-6621 (GMC) (72914) for future procurement)	1	FR	
	AN3140-327	.	. LAMP	2	FR	
-53	ID249B/ARN	.	INDICATOR (course) (GFP)	1	FR	
			ATTACHING PARTS			
	7S14CN632-18A	.	SCREW, Round head corrosion-resistant (NA) (89372)	2	FR	
	A6939-632-24A	.	SPEED NUT (TIN) (78553)	2	FR	
			---*---			
	B-6603	.	LIGHT FIXTURE (GMC) (72914) (superseded by B-8728 for future procurement)	1	FR	
	B-8728	.	LIGHT FIXTURE (GMC) (72914) (supersedes B-6603 (GMC) (72914) for future procurement)	1	FR	
	AN3140-327	.	. LAMP	2	FR	
-54	EA856MFC-20	.	INDICATOR (fuel capacity) (LI) (36536) (for breakdown see Technical Manual-NA 05-65AE-519)	1	MD	
	EA856MFC-27	.	INDICATOR (fuel capacity) (LI) (36536)	1	ME	
	A-6815-24	.	LIGHT FIXTURE (GMC) (72914) (includes lamp) (for fixture less lamp order - part number A-6815 (GMC) (72914))	2	FR	
	A-6815-24	.	LIGHT FIXTURE (GMC) (72914)	2	FR	
	AN3140-327	.	. LAMP	1	FR	
-55	1725-1BD-A1-1	.	INDICATOR (turn and bank) (Pioneer Central Division of Bendix Aviation Corporation (99251) (MIL-I-8687 (AER))	1	FR	
			ATTACHING PARTS			
	7S14CN632-14A	.	SCREW, Round head corrosion-resistant (NA) (89372)	4	FR	
	A6939-632-24A	.	SPEED NUT (TIN) (78553)	4	FR	
			---*---			
	B-8725	.	LIGHT FIXTURE (GMC) (72914) (supersedes B-8729 (GMC) (72914) for future procurement)	1	FR	
	AN3140-327	.	. LAMP	4	FR	
-56	UF5T20	.	STUD (DZ) (72794)	7	FR	
	GH5	.	GROMMET (DZ) (72794)	7	FR	
-57	AN822-4D	.	ELBOW	1	FR	
-58	AN823-4D	.	ELBOW	2	FR	
-59	AN816-4D	.	NIPPLE	1	FR	
-60	AN826-4D	.	TEE	2	FR	
-61	AN6270-4-17	.	HOSE ASSEMBLY (pitot)	1	FR	
-62	AN6270-4-14	.	HOSE ASSEMBLY (static)	1	FR	
-63	AN6270-4-17	.	HOSE (static)	1	FR	
-64	AN6270-4-12	.	HOSE ASSEMBLY (static)	1	FR	
-65	AN6270-4-16	.	HOSE ASSEMBLY (static)	1	FR	
-66	181-51011	.	HOOK, Instrument panel servicing support	2	FR	
			ATTACHING PARTS			
	7S13CN632-5A	.	SCREW, 100° flush head corrosion-resistant (NA) (89372)	4	FR	
			---*---			
-67	C10FA-548	.	VIBRATOR (instrument panel) (GLI) (25140)	1	FR	
			ATTACHING PARTS			
	7S13CN1032-15A	.	SCREW, 100° flush head corrosion-resistant (NA) (89372)	2	FR	
	7S13CN632-12A	.	SCREW, 100° flush head corrosion-resistant (NA) (89372)	1	FR	
			---*---			
	181-51016	.	SPACER, Instrument panel vibrator	1	FR	
-68	63316	.	STUD (UC) (81864)	2	FR	
	2W18-10M	.	WASHER, Flat (NA) (89372)	2	FR	
	AN365-1032	.	NUT	2	FR	
-69	209-51180	.	SHIELD, Fuel capacity indicator	1	FR	
			ATTACHING PARTS			
	7S14CN632-10A	.	SCREW, Round head corrosion-resistant (NA) (89372)	1	FR	
	2W18-6L	.	WASHER, Flat (NA) (89372)	2	FR	
	AN365B632	.	NUT	1	FR	
	2W18-8	.	WASHER, Flat (NA) (89372) (use between clamp and panel)	1	FR	
			---*---			
-70	AN5808-2	.	CLAMP	3	FR	
-71	AN5808-1	.	CLAMP	2	FR	
-72	10300	.	CLAMP (MAIV) (91893)	1	FR	
-73	194-54059-21	.	BAR, Electrical bus	1	FR	

PILOTS INSTRUMENT PANEL ASSEMBLY - APPLICABLE TO AIRCRAFT CODED (FR)

FIGURE & INDEX NO.	PART NUMBER	1	2	3	4	5	6	7	NOMENCLATURE	UNITS PER ASSY.	USABLE ON CODE	S/C NO.
318-74	187-51011-3	.							ADAPTER, Instrument panel (front)	1	FR	
	187-51011-5	.							ADAPTER, Instrument panel (back)	1	FR	
-75	397-10	.							COVER (HEGE) (94640)	1	FR	
	AN3433-2-6	.							BUS	1	MD	
	AN3433-2-7	.							BUS	1	ME	
-76	MS28042-4	.							CLAMP	1	ME	

ALL DATA DELETED FROM PAGE 865

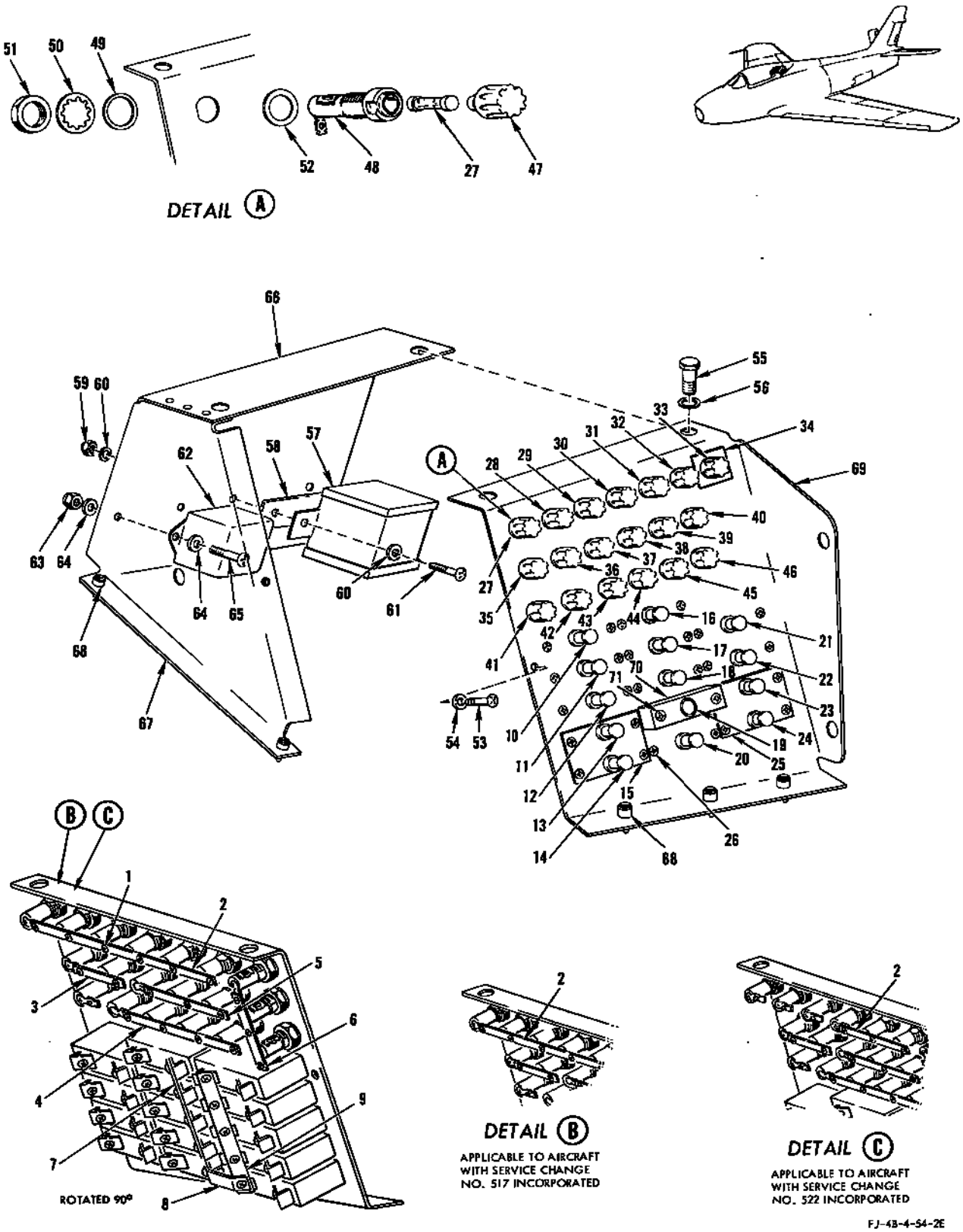

FIGURE 319 - RH REAR COCKPIT CIRCUIT BREAKER AND FUSE PANEL ASSEMBLY - APPLICABLE TO AIRCRAFT CODED (FR)

RH REAR COCKPIT CIRCUIT BREAKER AND FUSE PANEL ASSEMBLY - APPLICABLE TO AIRCRAFT CODED (FR)

FIGURE & INDEX NO.	PART NUMBER	1 2 3 4 5 6 7	NOMENCLATURE	UNITS PER ASSY.	USABLE ON CODE	S/C NO.
319	209-54472		PANEL ASSEMBLY, Circuit breaker and fuse cockpit RH rear complete	1	HV	517, 522, 524
	209-54472-11		PANEL ASSEMBLY, Circuit breaker and fuse cockpit RH rear complete	1	NT	517, 522, 524
	209-54472-21		PANEL ASSEMBLY, Circuit breaker and fuse cockpit RH rear complete	1	ME	517, 522, 524
	209-54472-31		PANEL ASSEMBLY, Circuit breaker and fuse cockpit RH rear complete	1	RS	517, 522, 524
-1	AN515-4R5	*1	SCREW	17	FR	
	2W1AL8-8-16	*1	WASHER, Plain (NA) (89372)	34	FR	
	AN365-440	*1	NUT	17	FR	
	AN515-4R5	*2	SCREW	18	FR	
	2W1AL8-8-16	*2	WASHER, Plain (NA) (89372)	36	FR	
	AN365-440	*2	NUT	18	FR	
-2	194-54059-15		BAR, Electrical bus	1	FR	517
	194-54059-17		BAR, Electrical bus (replaces 194-54059-15 on aircraft having Service Change No. 517 incorporated)	1	FR	522
	194-54059-13		BAR, Electrical bus (replaces 194-54059-17 on aircraft having Service Change No. 522 incorporated)	1	FR	
-3	194-54059-11	.	BAR, Electrical bus	1	FR	
-4	194-54059-29	.	BAR, Electrical bus	1	FR	
-5	194-54059-13	.	BAR, Electrical bus	1	FR	
-6	194-54059-69	.	BAR, Electrical bus	1	FR	
-7	194-54059-25	.	BAR, Electrical bus	1	FR	
-8	194-54059-19	.	BAR, Electrical bus	1	FR	
-9	194-54059-27	.	BAR, Electrical bus	1	FR	
-10	MS25017-10	.	CIRCUIT BREAKER (bomb and rocket fire stations 1 and 6)	1	FR	
-11	MS25017-10	.	CIRCUIT BREAKER (bomb and rocket fire stations 2 and 5)	1	FR	
-12	MS25017-10	.	CIRCUIT BREAKER (bomb and rocket fire stations 3 and 4)	1	FR	
-13	MS25017-5	.	CIRCUIT BREAKER (gun charging)	1	FR	
-14	MS25017-15	.	CIRCUIT BREAKER (bomb and gun trigger)	1	FR	
-15	244-54061-5		PLATE, Electrical identification (added by Service Change No. 524)	1	FR	
-16	MS25017-20	.	CIRCUIT BREAKER (sidewinder power stations 1 and 6)	1	KX	
	MS25017-20	.	CIRCUIT BREAKER (missile power stations 1 and 6)	1	KY	
-17	MS25017-20	.	CIRCUIT BREAKER (sidewinder power stations 2 and 5)	1	KX	
	MS25017-20	.	CIRCUIT BREAKER (missile power stations 2 and 5)	1	KY	
-18	MS25017-20	.	CIRCUIT BREAKER (sidewinder power stations 3 and 4)	1	KX	
	MS25017-20	.	CIRCUIT BREAKER (missile power stations 3 and 4)	1	KY	
-19	MS25017-5	.	CIRCUIT BREAKER (LABS power)	1	FR	
-20	MS25017-15	.	CIRCUIT BREAKER (mode selector and bomb arming)	1	FR	
-21	MS25017-5	.	CIRCUIT BREAKER (armament bus)	1	FR	
-22	MS25017-5	.	CIRCUIT BREAKER (gun bay purge)	1	FR	
-23	MS25017-5	.	CIRCUIT BREAKER (purge valve and camera test)	1	FR	
-24	MS25017-5	.	CIRCUIT BREAKER (ammo boost and gun camera)	1	FR	
-25	244-54061-3		PLATE, Electrical identification (added by Service Change No. 524)	1	FR	
-26	AN515-6R7	.	SCREW	26	FR	
-27	312001	.	FUSE (RMI indicator) (LTF) (75915)	1	KX	
	312002	.	FUSE (RMI indicator) (LTF) (75915)	1	KY	
-28	312001	.	FUSE (fuel quantity) (LTF) (75915)	1	FR	
-29	312001	.	FUSE (inverter warning phase C) (LTF) (75915)	1	FR	
-30	312001	.	FUSE (oxygen indicator) (LTF) (75915)	1	FR	
-31	312001	.	FUSE (instrument transformer) (LTF) (75915)	1	FR	
-32	312001	.	FUSE (gyro horizon phase C) (LTF) (75915)	1	FR	
-33	312001	.	FUSE (counter-pointer altimeter) (LTF) (75915) (only on aircraft having Service Change No. 517 incorporated)	1	FR	
-34	244-54026		NAMEPLATE, Electrical altimeter fuse (added by Service Change No. 517)	1	FR	
-35	312001	.	FUSE (fuel flowmeter) (LTF) (75915)	1	FR	
-36	312001	.	FUSE (gyro horizon phase A) (LTF) (75915)	1	FR	
-37	312001	.	FUSE (angle of attack) (LTF) (75915)	1	FR	
-38	312001	.	FUSE (inverter warning phase A) (LTF) (75915)	1	FR	
-39	312002	.	FUSE (sidewinder stations 3 and 4) (LTF) (75915)	1	KX	
	312002	.	FUSE (missile stations 3 and 4) (LTF) (75915)	1	KY	
-40	312001	.	FUSE (RH gun power) (LTF) (75915)	1	HJ	
	312004	.	FUSE (RH gun power) (LTF) (75915)	1	FL	
-41	312001	.	FUSE (hydraulic pressure indicator) (LTF) (75915)	1	MD	
	312001	.	FUSE (hydraulic and oil pressure indicator) (LTF) (75915)	1	ME	
-42	312003	.	FUSE (T-208 power) (LTF) (75915)	1	FR	
-43	312002	.	FUSE (sidewinder stations 2 and 5) (LTF) (75915)	1	KX	
	312002	.	FUSE (missile stations 2 and 5) (LTF) (75915)	1	KY	
-44	312001	.	FUSE (LH gun power) (LTF) (75915)	1	HJ	
	312004	.	FUSE (LH gun power) (LTF) (75915)	1	FL	
-45	312001	.	FUSE (position trim) (LTF) (75915)	1	FR	
-46	312002	.	FUSE (sidewinder stations 1 and 6) (LTF) (75915)	1	KX	
	312002	.	FUSE (missile stations 1 and 6) (LTF) (75915)	1	KY	
	342001	*1	3AG EXTRACTOR, Fuse post (LTF) (75915)	18	FR	
	342001	*2	3AG EXTRACTOR, Fuse post (LTF) (75915)	19	FR	
-47	342001-SA2	. .	KNOB, Subassembly (LTF) (75915)	1	FR	
-48	342001-SA1	. .	BODY, Subassembly (LTF) (75915)	1	FR	
-49	901-2	. .	WASHER (LTF) (75915)	1	FR	
-50	905-3	. .	LOCKWASHER (LTF) (75915)	1	FR	
-51	903-12	. .	NUT (LTF) (75915)	1	FR	
-52	2W1AL34-24-20	.	WASHER, Plain (NA) (89372)	18	FR	
-53	AN520-10R8	.	SCREW	1	FR	
-54	2W18-10M	.	WASHER, Flat (NA) (89372)	1	FR	
-55	AN3-3A	.	BOLT	2	FR	
-56	2W18-10M	.	WASHER, Flat (NA) (89372)	2	FR	

RH REAR COCKPIT CIRCUIT BREAKER AND FUSE PANEL ASSEMBLY - APPLICABLE TO AIRCRAFT CODED (FR)

FIGURE & INDEX NO.	PART NUMBER	1	2	3	4	5	6	7	NOMENCLATURE	UNITS PER ASSY.	USABLE ON CODE	S/C NO.
319-57	9T39Y5	.							TRANSFORMER (26 volt instrument) (GEMI) (97424) (supersedes 70G175 (GEMI) (97424) for future procurement) (interchangeable with 70G175 (GEMI) (97424))	1	FR	
-58	181-54213	.							SHIM, Transformer mounting	1	FR	
-59	AN365-1032	.							NUT	2	FR	
-60	2W18-10M	.							WASHER, Flat (NA) (89372)	4	FR	
-61	AN520-10R10	.							SCREW	2	FR	
-62	AN3311-2	.							RELAY (IFF and UHF transfer) (supersedes AN3311-1 for future procurement)	1	FR	
-63	AN365-832	.							NUT	2	FR	
-64	2W18-8L	.							WASHER, Flat (NA) (89372)	4	FR	
-65	AN515-6R8	.							SCREW	2	FR	
-66	209-54187	.							COVER ASSEMBLY, Circuit breaker and fuse cockpit RH rear	1	FR	
-67	209-54188	.							PANEL SIDE ASSEMBLY, Circuit breaker and fuse cockpit RH rear side	1	FR	
-68	PF3-1/2-38	.	.						FASTENER (DZ) (72794)	4	FR	
	PC3-1/2	.	.						CUP (DZ) (72794)	4	FR	
	PS3-1/2	.	.						SPRING (DZ) (72794)	4	FR	
-69	209-54471-3	.							PANEL ASSEMBLY, Circuit breaker and fuse cockpit RH rear	1	HJ	
	209-54471-11	.							PANEL ASSEMBLY, Circuit breaker and fuse cockpit RH rear	1	NT	
	209-54471-21	.							PANEL ASSEMBLY, Circuit breaker and fuse cockpit RH rear	1	ME	
	209-54471-31	.							PANEL ASSEMBLY, Circuit breaker and fuse cockpit RH rear	1	RS	
-70	209-54176	.							GUARD, LABS power	1	FR	
-71	AN507-632R12	.							SCREW	2	FR	

NOTE: *1 Quantities indicated are for basic assembly
*2 Quantities utilized after incorporating Service Change No. 517

PNEUMATIC GUN CHARGING LINES AND EQUIPMENT

FIGURE & INDEX NO.	PART NUMBER	1 2 3 4 5 6 7 NOMENCLATURE	UNITS PER ASSY.	USABLE ON CODE
320-26	209-59181-43	LINE ASSEMBLY, Pneumatic gun circuit from pressure tee at fuselage station 70 BL 19 to elbow in canted deck (see figure 321 for continuation)	1	EK
-27	209-59065-9	PNEUMATIC EQUIPMENT ASSEMBLY, Coupling charger air pressure	2	Z
	ATTACHING PARTS			
	AN901-4A	GASKET	4	Z
	AN924-4	NUT	2	Z
	---*---			
	MS21910-4	. TEE	1	Z
	AN6290-4	. GASKET	1	Z
	144000-1	. PLUG, Valve quick disconnect (ESSX)	1	Z
-28	209-59181-67	LINE ASSEMBLY, Pneumatic gun circuit from bulkhead elbow to disconnect tee RH	1	Z
-29	MS21908-4	ELBOW	2	Z
	AN901-4A	GASKET	4	Z
	AN924-4	NUT	2	Z
-30	209-59181-65	LINE ASSEMBLY, Pneumatic gun circuit from reducer up to bulkhead elbow at station 71.75 RH	1	Z
-31	MS21916-6-4	REDUCER	2	Z
-32	209-59181-63	LINE ASSEMBLY, Pneumatic gun circuit from tee at station 70 BL 22.5 up to reducer RH	1	Z
-33	209-59181-59	LINE ASSEMBLY, Pneumatic gun circuit from bulkhead elbow up to disconnect tee LH	1	Z
-34	209-59181-57	LINE ASSEMBLY, Pneumatic gun circuit from reducer up to bulkhead elbow at station 71.75 LH	1	Z
-35	209-59181-55	LINE ASSEMBLY, Pneumatic gun circuit from elbow at station 69 BL 22.63 to reducer LH	1	Z
-36	MS21908-4	ELBOW	1	EK
	2W18-716	WASHER, Flat (NA)	2	EK
	AN924-4	NUT	1	EK
-37	209-59181-23	LINE ASSEMBLY, Pneumatic gun circuit from elbow in wheel well web to elbow at station 67.44 BL 18.63	1	EK
-38	209-59181-49	LINE ASSEMBLY, Pneumatic gun circuit from pressure elbow at station 69 BL 22.63 to disconnect tee at station 71.75	1	CL
-39	MS21908-6	ELBOW	1	EK
	2W18-916	WASHER, Flat (NA)	2	EK
	AN924-6	NUT	1	EK
-40	209-59181-35	LINE ASSEMBLY, Pneumatic gun circuit from elbow in LH wheel well web to elbow at station 69 BL 22.63	1	EK
-41	MS21907D6	ELBOW	1	EK
	2W18-916	WASHER, Flat (NA)	2	EK
	AN924-6D	NUT	1	EK
-42	MS21907D4	ELBOW	1	EK
	2W18-716	WASHER, Flat (NA)	2	EK
	AN924-4D	NUT	1	EK
-43	209-59181-33	LINE ASSEMBLY, Pneumatic gun circuit from elbow in RH wheel well web across to elbow in LH well web (see figure 321 for continuation)	1	GS
-44	209-59181-77	LINE ASSEMBLY, Pneumatic gun circuit from elbow in RH wheel well web across to elbow in LH well web (see figure 321 for continuation)	1	FR
-45	209-59181-21	LINE ASSEMBLY, Pneumatic gun circuit from elbow in RH well across to elbow in LH wheel well web (see figure 321 for continuation)	1	GS
-46	209-59181-73	LINE ASSEMBLY, Pneumatic gun circuit from elbow in RH well across to elbow in LH wheel well web (see figure 321 for continuation)	1	FR
-47	AN822-6D	ELBOW (connects to windshield defrost line)	1	EK
-48	209-59180-19	LINE ASSEMBLY, Pneumatic power circuit supercharging system defrost line from station 66 to bulkhead elbow at station 64.18 (see Heat and Vent)	1	EK
-49	MS21908D6	ELBOW	1	EK
	2W18-916	WASHER, Flat (NA)	1	EK
	AN924-6D	NUT	1	EK
-50	194-59801-5	LINE ASSEMBLY, Supercharger system pneumatic gun charger from bulkhead union at station 64.18 to elbow at station 66.87	1	EK
-51	MS21904D6	ELBOW	1	EK
-52	194-59801-7	LINE ASSEMBLY, Supercharger system pneumatic gun charger from elbow at station 66.87 to union at station 66.87	1	EK
-53	MS21902D6	UNION	1	EK
-54	194-59801-9	LINE ASSEMBLY, Supercharger system pneumatic gun charger from union at station 66.87 forward and outboard to filter union at station 55.75 (see figure 321 for continuation)	1	EK
-55	R3800-NA-4-0153	HOSE ASSEMBLY, Charger (RF) (interchangeable with S-23604-1506 (TF) (used on outboard gun RH)	1	
	R3800-NA-4-0105	HOSE ASSEMBLY, Charger (RF) (interchangeable with S-23604-1010 (TF)) (used on inboard gun RH)	1	
	R3800-NA-4-0110	HOSE ASSEMBLY, Charger (RF) (interchangeable with S-23604-1100 TF)) (used on outboard gun LH)	1	
	R3800-NA-4-0120	HOSE ASSEMBLY, Charger (RF) (interchangeable with S-23604-1200 (TF)) (used on inboard gun LH)	1	
-56	R3800-NA-4-0134	HOSE ASSEMBLY, Charger return (RF) (interchangeable with S-23604-1308 (TF)) (used on outboard gun RH)	1	
	R3800-NA-4-0094	HOSE ASSEMBLY, Charger return (RF) (interchangeable with S-23604-0903 (TF)) (used on inboard gun RH)	1	
	R3800-NA-4-0090	HOSE ASSEMBLY, Charger return (RF) (interchangeable with S-23604-0900 (TF)) (used on outboard gun LH)	1	
	R3800-NA-4-0182	HOSE ASSEMBLY, Charger return (RF) (interchangeable with S-23604-1804 (TF)) (used on inboard gun LH)	1	

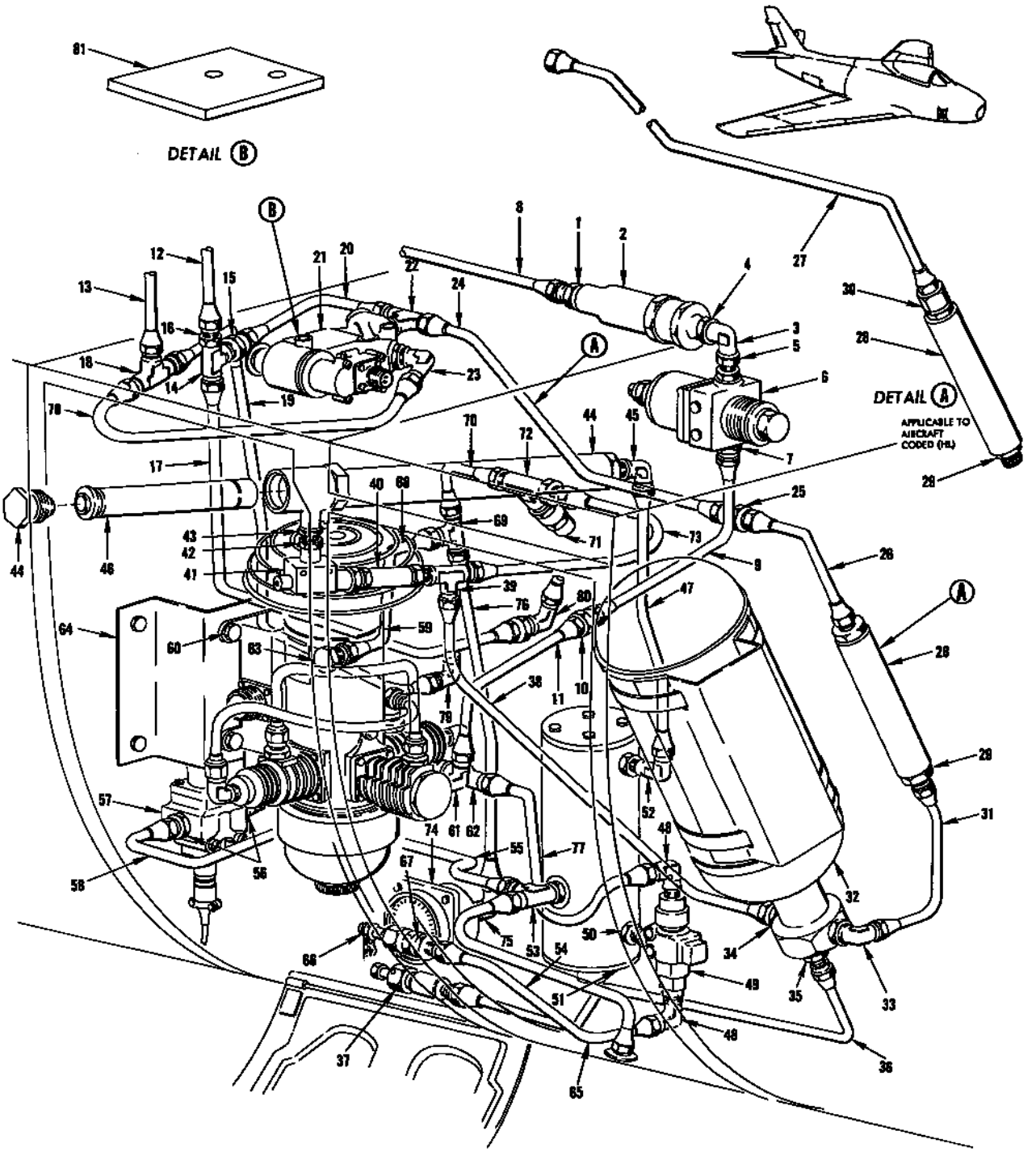

FJ-46-4-59-1A

FIGURE 321 - PNEUMATIC GUN CHARGING EQUIPMENT AT COMPRESSOR AND STORAGE BOTTLE BAY

PNEUMATIC GUN CHARGING EQUIPMENT AT COMPRESSOR AND STORAGE BOTTLE BAY

FIGURE & INDEX NO.	PART NUMBER	1 2 3 4 5 6 7 NOMENCLATURE	UNITS PER ASSY.	USABLE ON CODE	S/C NO.
321	209-59160	PNEUMATIC EQUIPMENT ASSEMBLY, Regulator supercharger filter and pressure	1	EK	
	ATTACHING PARTS				
	AN74A3	BOLT	2	EK	
	2W18-416	WASHER, Flat (NA) (89372)	2	EK	
	2W1AL37-26-250	WASHER, Plain (NA) (89372)	1	EK	
	AN924-6D	NUT	1	EK	
	---*--				
-1	MS21902D6	. UNION	1	EK	
	AN6290-6	. GASKET	1	EK	
-2	53322	. AIR FILTER, In-line type (PUP) (81321)	1	EK	
-3	AN939-5D	. ELBOW	1	EK	
-4	MS21916D6-5	. REDUCER	1	EK	
	AN6290-6	. GASKET	1	EK	
	AN6290-5	. GASKET	1	EK	
-5	MS21903D5	. UNION	1	EK	
	AN6289-5	. NUT	1	EK	
	AN6291-5	. RING	1	EK	
	AN6290-5	. GASKET	2	EK	
-6	135-D-100-4	. REGULATOR, Absolute pressure (CNL) (14650)	1	EK	
-7	MS21903D6	. UNION	1	EK	
	AN6290-6	. GASKET	1	EK	
-8	194-59801-9	LINE ASSEMBLY, Supercharger system from union at station 66.87 forward and outboard to filter union at station 55.75 (see figure 320 for continuation)	1	EK	
-9	209-59180-3	LINE ASSEMBLY, Pneumatic power circuit from absolute pressure to reducer at station 58	1	EK	
-10	MS21916D6-4	REDUCER	1	EK	
-11	209-59180-5	LINE ASSEMBLY, Pneumatic power circuit from reducer at station 58 to compressor inlet elbow	1	EK	
-12	209-59181-43	LINE ASSEMBLY, Pneumatic gun circuit from tee at fuselage station 70 BL 19 to elbow in canted deck (see figure 320 for continuation)	1	EK	
-13	209-59181-47	LINE ASSEMBLY, Pneumatic gun circuit from pressure tee at station 70 BL 22.50 to disconnect tee at station 71.75 (see figure 320 for continuation)	1	CL	
	209-59181-63	LINE ASSEMBLY, Pneumatic gun circuit pressure from tee at station 70 BL 22.50 to reducer (see figure 320 for continuation)	1	Z	
-14	MS21910-4	TEE	1	EK	
-15	MS21916-6-4	REDUCER	1	EK	
	AN6290-4	GASKET	1	EK	
-16	2W18-716	WASHER, Flat (NA) (89372)	2	EK	
	AN924-4	NUT	1	EK	
-17	209-59181-19	LINE ASSEMBLY, Pneumatic gun circuit from tee at station 70 BL 19 to elbow in wheel well web	1	EK	
-18	MS21909-6	TEE	1	EK	
	2W18-916	WASHER, Flat (NA) (89372)	2	EK	
	AN924-6	NUT	1	EK	
-19	209-59181-31	LINE ASSEMBLY, Pneumatic gun circuit from tee at station 70 BL 22.50 to elbow in wheel well web station 70.75 wl-34	1	EK	
-20	209-59181-15	LINE ASSEMBLY, Pneumatic gun circuit charger valve inlet tee to tee at BL 19 station 70	1	EK	
	209-59168	PNEUMATIC EQUIPMENT ASSEMBLY, Charging valve gun charging system	1	EK	
	209-59168-11	PNEUMATIC EQUIPMENT ASSEMBLY, Charging valve gun charging system	1	EK	
	ATTACHING PARTS				
	AN3-24A	BOLT (used on 209-59168 only)	2	EK	
	AN3-21A	BOLT (used on 209-59168-11 only)	2	EK	
	2W18-10	WASHER, Flat (NA) (89372)	2	EK	
	---*---				
-21	113195	*1 . VALVE ASSEMBLY, Solenoid pilot actuated 3-way 2-position (WTR) (94256) (used on 209-59168 only)	1	EK	
	871302	*1 . VALVE ASSEMBLY (WK) (33525) (used on 209-59168-11 only)	1	EK	
-22	MS21909D6	. TEE	1	EK	
	AN6289-6	. NUT	1	EK	
	AN6290-6	. GASKET	1	EK	
	AN6291-6	. RING	1	EK	
-23	MS21908D6	. ELBOW	1	EK	
	AN6289-6	. NUT	1	EK	
	AN6290-6	. GASKET	1	EK	
	AN6291-6	. RING	1	EK	
-24	209-59181-13	LINE ASSEMBLY, Pneumatic gun circuit from reducer at station 56 to charger valve inlet tee	1	KM	
-25	MS21916D8-6	REDUCER	1	KM	
-26	209-59181-11	LINE ASSEMBLY, Pneumatic gun circuit from filter outlet to reducer at station 56	1	KM	
-27	209-59181-85	LINE ASSEMBLY, Pneumatic gun circuit from filter outlet to charger valve inlet tee	1	HL	
	209-59167	PNEUMATIC EQUIPMENT ASSEMBLY, Valve gun charging	1	KM	
	209-59167-11	PNEUMATIC EQUIPMENT ASSEMBLY, Valve gun charging	1	HL	
	ATTACHING PARTS				
	MS21919DG20	CLAMP	1	EK	
	AN520-10R8	SCREW	1	EK	
	2W18-10	WASHER, Flat (NA) (89372)	2	EK	
	AN365-1032	NUT	1	EK	
	---*---				

PNEUMATIC GUN CHARGING EQUIPMENT AT COMPRESSOR AND STORAGE BOTTLE BAY

FIGURE & INDEX NO.	PART NUMBER	1 2 3 4 5 6 7 NOMENCLATURE	UNITS PER ASSY.	USABLE ON CODE	S/C NO.
321-28	840499	. FILTER ASSEMBLY (WK) (33525) (for breakdown see Technical Manual AN 03-30AY-2)	1	EK	
-29	MS21916D8-6	. REDUCER	1	EK	
	AN6290-8	. GASKET	1	EK	
-30	MS21915D8-6	. BUSHING (used on 209-59167-11 only)	1	HL	
	AN6290-8	. GASKET (used on 209-59167-11 only)	1	HL	
-31	209-59181-9	LINE ASSEMBLY, Pneumatic gun circuit from bottle outlet to filter inlet	1	EK	
	209-59166	PNEUMATIC EQUIPMENT ASSEMBLY, Bottle gun charging system air	1	SZ	462
	209-59166-11	PNEUMATIC EQUIPMENT ASSEMBLY, Bottle gun charging system air	1	ME	
	ATTACHING PARTS				
	365-63-537SH	CLAMP (MAR) (98625)	2	EK	
	---*---				
-32	870420	. AIR BOTTLE (WK) (33525)	1	EK	
-33	MS21908D6	. ELBOW	1	EK	
	AN6289-6	. NUT	1	EK	
	AN6290-6	. GASKET	1	EK	
	AN6291-6	. RING	1	EK	
-34	MS21916D6-4	. REDUCER	1	EK	
	AN6290-6	. GASKET	1	EK	
-35	244-59103	. ADAPTER, Pneumatic system storage bottle	1	ME	
-36	209-59181-87	LINE ASSEMBLY, Pneumatic gun circuit from drain on storage bottle to bleed plug station 62.625	1	ME	
-37	244-59601	VALVE ASSEMBLY, Pneumatic system storage bottle bleed	1	ME	
	244-59102	. VALVE BODY	1	ME	
	244-59101	. PLUG	1	ME	
	NAS561P3-16	. PIN	1	ME	
-38	209-59181-7	LINE ASSEMBLY, Pneumatic gun circuit from chemical drier outlet tee to bottle inlet	1	EK	
	209-59164	PNEUMATIC EQUIPMENT ASSEMBLY, Drier gun charging system chemical	1	EK	
	ATTACHING PARTS				
	AN742-20	CLAMP	2	EK	
	AN520-10R10	SCREW	2	EK	
	2W18-10	WASHER, Flat (NA) (89372)	4	EK	
	AN365-1032	NUT	2	EK	
	---*---				
-39	MS21912D4	. TEE	1	EK	
	AN6289-4	. NUT	1	EK	
	AN6290-4	. GASKET	1	EK	
	AN6291-4	. RING	1	EK	
-40	140-B-3100	. VALVE, Check (CNL) (14650) (interchangeable with 140-B-1100 (CNL) (14650)	1	EK	
-41	840301	. VALVE, Back pressure (WK) (33525) (for breakdown see Techanical Manual AN 03-30AY-2	1	EK	
	MS21916D6-4	. REDUCER	1	EK	
	AN6290-6	. GASKET	1	EK	
	AN6290-4	. GASKET	1	EK	
-42	MS21903D4	. UNION	1	EK	
-43	AN6289-4	. NUT	1	EK	
	AN6290-4	. GASKET	2	EK	
	AN6291-4	. RING	1	EK	
-44	840716	. HOUSING, Chemical drier (WK) (33525)	1	EK	
-45	MS21908D4	. ELBOW	1	EK	
	AN6289-4	. NUT	1	EK	
	AN6290-4	. GASKET	1	EK	
	AN6291-4	. RING	1	EK	
-46	840482	CARTRIDGE, Drier (WK) (33525)	1	EK	
-47	209-59180-17	LINE ASSEMBLY, Pneumatic power circuit from moisture separator outlet to chemical drier inlet	1	EK	
	209-59163	PNEUMATIC EQUIPMENT ASSEMBLY, Separator gun charging system moisture	1	EK	
	ATTACHING PARTS				
	820-16	CLAMP (MAR) (98625)	2	EK	
	---*---				
-48	MS21908D4	. ELBOW	2	EK	
	AN6289-4	. NUT	2	EK	
	AN6290-4	. GASKET	2	EK	
	AN6291-4	. RING	2	EK	
-49	11377	. VALVE, Shuttle (KY) (75287) (interchangeable with 27370-1 (AP) (00502)	1	EK	
-50	MS21903D4	. UNION	1	EK	
	AN6289-4	. NUT	1	EK	
	AN6290-4	. GASKET	2	EK	
	AN6291-4	. RING	1	EK	
-51	871351	. SEPARATOR (WK) (33525) (for breakdown see Technical Manual AN 03-30AY-2) (interchangeable with 870449 (WK) (33525) by removing bracket and straps)	1	EK	
-52	MS21908D4	. ELBOW	1	EK	
	AN6289-4	. NUT	1	EK	
	AN6290-4	. GASKET	1	EK	
	AN6291-4	. RING	1	EK	
-53	MS21912D4	. TEE	1	EK	
	AN6289-4	. NUT	1	EK	
	AN6290-4	. GASKET	1	EK	
	AN6291-4	. RING	1	EK	
-54	209-59180-11	LINE ASSEMBLY, Pneumatic power circuit from moisture separator drain tee to overboard fitting	1	EK	

PNEUMATIC GUN CHARGING EQUIPMENT AT COMPRESSOR AND STORAGE BOTTLE BAY

FIGURE & INDEX NO.	PART NUMBER	1 2 3 4 5 6 7 NOMENCLATURE	UNITS PER ASSY.	USABLE ON CODE	S/C NO.
321-55	209-59180-9	LINE ASSEMBLY, Pneumatic power circuit from dump valve outlet to moisture separator drain tee	1	EK	
	209-59162	PNEUMATIC EQUIPMENT ASSEMBLY, Valve overboard dump gun charging system	1	EK	
	ATTACHING PARTS				
	AN3-17A	BOLT	2	EK	
	2W18-10	WASHER, Flat (NA) (89372)	2	EK	
	---*---				
-56	MS21902D4	. UNION	2	EK	
	AN6290-4	. GASKET	2	EK	
-57	50013	. VALVE, Dump (AP) (00502) (superseded by 50013-1 (AP) (00502)	1	EK	
	50013-1	. VALVE, Dump (AP) (00502) (interchangeable with MC2644-1 (MCV) (76050) and supersedes 50013 (AP) (00502))	1	EK	
-58	209-59180-7	LINE ASSEMBLY, Pneumatic power circuit from compressor outlet tee to dump valve inlet	1	EK	
	209-59161	PNEUMATIC EQUIPMENT ASSEMBLY, Compressor gun charging air	1	EK	
-59	32-R-1600-1-0	. COMPRESSOR (CNL) (14650) (for breakdown see Technical Manual AN 03-30AJ-2)	1	EK	
	ATTACHING PARTS				
-60	AN4-12A	. BOLT	4	EK	
	31-A-133	. BUSHING (CNL) (14650)	4	EK	
	AN365-428	. NUT	4	EK	
	---*---				
-61	MS21908D4	. ELBOW	1	EK	
	AN6289-4	. NUT	1	EK	
	AN6290-4	. GASKET	1	EK	
	AN6291-4	. RING	1	EK	
-62	MS21909D4	. TEE	1	EK	
	AN6289-4	. NUT	1	EK	
	AN6290-4	. GASKET	1	EK	
	AN6291-4	. RING	1	EK	
-63	MS21902D4	. UNION	1	EK	
	AN6290-4	. GASKET	1	EK	
-64	209-59120	BRACKET, Pneumatic gun system air compressor	1	EK	
	ATTACHING PARTS				
	AN4-6A	BOLT	4	EK	
	2W18-416	WASHER, Flat (NA) (89372)	8	EK	
	AN365-428	NUT	4	EK	
	---*---				
-65	209-59180-13	LINE ASSEMBLY, Pneumatic power circuit from ground filler fitting to shuttle valve inlet	1	EK	
-66	187-45108	CAP ASSEMBLY, Engine starter system wet air connection	1	EK	
	9C1-3-3	. CHAIN, Safety (NA) (89372)	1	EK	
-67	MS21901-4	UNION	1	EK	
	2W18-10	WASHER, Flat (NA) (89372)	2	EK	
	AN924-4D	NUT	1	EK	
-68	209-59181-39	LINE ASSEMBLY, Pneumatic gun circuit from floating tee to pressure switch in compressor	1	EK	
-69	MS21905D4	TEE	1	EK	
-70	209-59181-5	LINE ASSEMBLY, Pneumatic gun circuit from relief valve tee to floating tee	1	EK	
	209-59165	PNEUMATIC EQUIPMENT ASSEMBLY, Valve gun charging system relief	1	EK	
	ATTACHING PARTS				
	2W18-716	WASHER, Flat (NA) (89372)	2	EK	
	AN924-4D	NUT	1	EK	
	---*---				
-71	MC1603-1750	. VALVE, Relief (MCV) (76050) (interchangeable with 117B200 (CNL) (14650)) (for breakdown see Technical Manual AN 03-10AAB-550)	1	EK	
-72	MS21910D4	. TEE	1	EK	
	AN6290-4	. GASKET	1	EK	
-73	209-59181-3	LINE ASSEMBLY, Pneumatic gun circuit from chemical drier outlet tee to relief valve tee	1	EK	
	209-59169	PNEUMATIC EQUIPMENT ASSEMBLY, Gage gun charging pressure	1	EK	
-74	AN5771T4C	. GAGE, Single 1-7/8 dial pressure	1	EK	
-75	MS21908D4	. ELBOW	1	EK	
	AN6289-4	. NUT	1	EK	
	AN6290-4	. GASKET	1	EK	
	AN6291-4	. RING	1	EK	
-76	209-59181-41	LINE ASSEMBLY, Pneumatic gun circuit from floating tee down to pressure gage	1	EK	
-77	209-59180-15	LINE ASSEMBLY, Pneumatic power circuit from compressor outlet tee to shuttle valve inlet	1	EK	
-78	209-59181-27	LINE ASSEMBLY, Pneumatic gun circuit from charger valve outlet to tee at station 70 BL 22.5	1	EK	
-79	MS21908D6	ELBOW	1	EK	
	2W18-916	WASHER, Flat (NA) (89372)	2	EK	
	AN924-6D	NUT	1	EK	
-80	MS21907D4	ELBOW	1	EK	
	2W18-716	WASHER, Flat (NA) (89372)	2	EK	
	AN924-4D	NUT	1	EK	
-81	194-59211	*1 SPACER, Pneumatic gun charger valve (used on 209-59168-11 only)	1	EK	

NOTE: *1 871302 (WK) (33525) with 194-59211 may be substituted for 113195 (WTR) (94526)

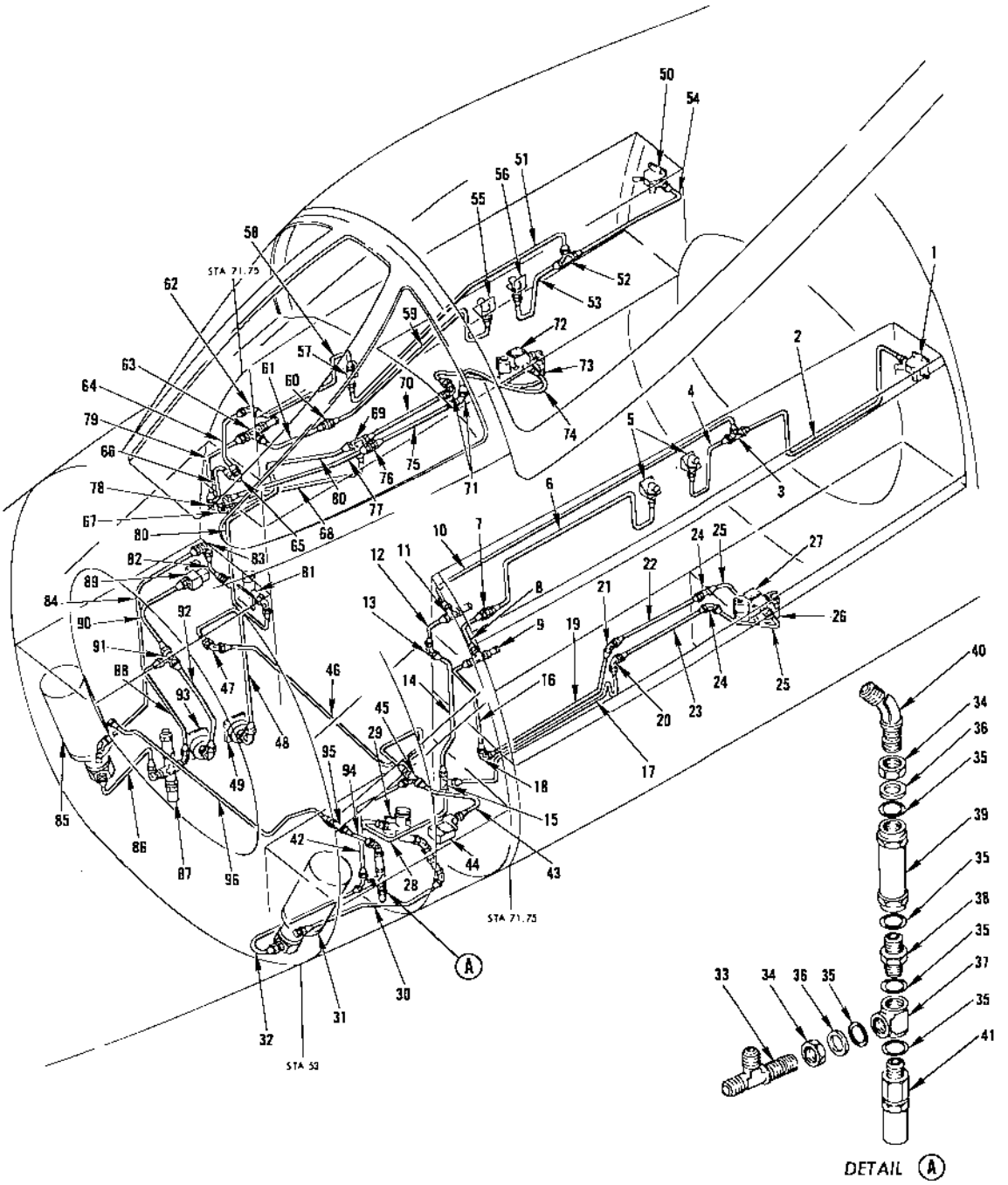

FJ-4-4-59-3A

FIGURE 322 - PNEUMATIC GUN CHARGING SYSTEM (3000 PSI) - APPLICABLE TO AIRCRAFT CODED (AD)

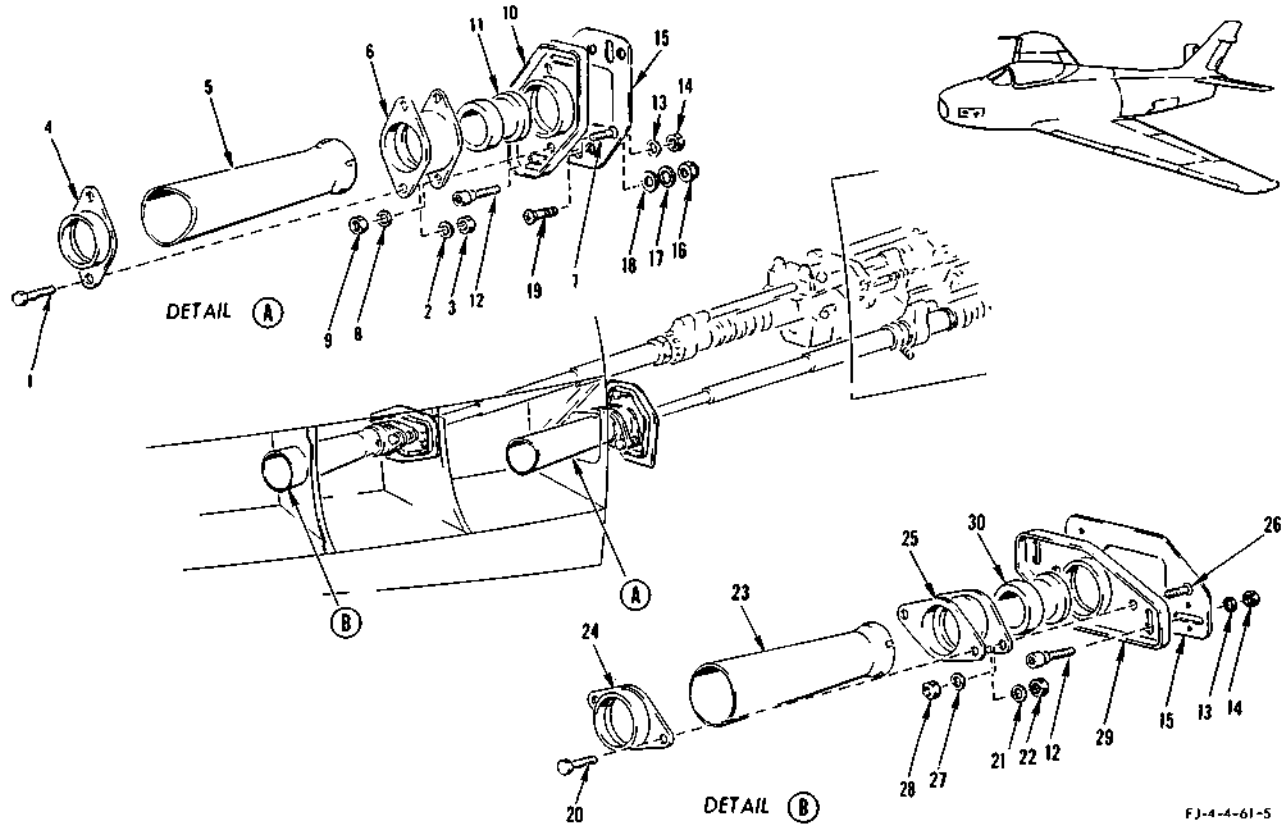

FIGURE 329 - GUN MUZZLE STABILIZER

FIGURE & INDEX NO.	PART NUMBER	1 2 3 4 5 6 7 NOMENCLATURE	UNITS PER ASSY.	USABLE ON CODE	S/C NO.
329	209-61285-11	STABILIZER ASSEMBLY, Gun muzzle LH (outboard gun)	1		
	209-61285-12	STABILIZER ASSEMBLY, Gun muzzle RH (outboard gun)	1		
-1	NAS501-4-7	. BOLT	2		
-2	2W17-416	. WASHER, Corrosion-resistant steel (NA) (89372)	4		
-3	AN310C4	. NUT	2		
-4	209-61289	. RING, Gun blast tube retainer	1		
-5	209-61241-11	. TUBE, Outboard gun blast	1		
-6	209-61288-11	. RETAINER, Gun blast tube	1		
	209-61287	. . SPACER, Gun blast tube retainer	1		
-7	209-61290	. SCREW, Gun muzzle stabilizer	2		
-8	2W17-516	. WASHER, Corrosion-resistant steel (NA) (89372)	2		
-9	AN310C5	. NUT	2		
-10	209-61054-5	. PLATE, Gun muzzle stabilizer adjustable LH	1		
	209-61054-6	. PLATE, Gun muzzle stabilizer adjustable RH	1		
-11	194-61187	. BEARING, Gun muzzle stabilizer	1		
-12	181-61056	BOLT, Gun muzzle stabilizer adjustment	4		
-13	2W1C21-24-64	WASHER, Plain (NA) (89372)	4		
-14	AN363C524	NUT	4	BR	
	42NE-054	NUT (EN) (72962)	4	BS	
-15	209-61055	PLATE, Gun muzzle stabilizer fixed	2		
-16	AN365-428	NUT	4		
-17	2W18-416	WASHER, Flat (NA) (89372)	4		
-18	2W1AL-17-32-64	WASHER, Flat (NA) (89372)	4		
-19	AN509-416R13	SCREW	4		
	209-61385-1	STABILIZER ASSEMBLY, Gun muzzle LH (inboard gun)	1		
	209-61385-2	STABILIZER ASSEMBLY, Gun muzzle RH (inboard gun)	1		
-20	NAS501-4-7	. BOLT	2		
-21	2W17-416	. WASHER, Corrosion-resistant steel (NA) (89372)	4		
-22	AN310C4	. NUT	2		
-23	209-61341	. TUBE ASSEMBLY, Inboard gun blast	1		
-24	209-61289	. . RING, Gun blast tube retainer	1		
-25	209-61288-11	. RETAINER, Gun blast tube	1		
	209-61287	. . SPACER, Gun blast tube retainer	1		
-26	209-61290	. SCREW, Gun muzzle stabilizer	2		
-27	2W17-516	. WASHER, Corrosion-resistant steel (NA) (89372)	2		
-28	AN310C5	. NUT	2		
-29	209-61054-5	. PLATE, Gun muzzle stabilizer adjustable LH	1		
	209-61054-6	. PLATE, Gun muzzle stabilizer adjustable RH	1		
-30	194-61187	. BEARING, Gun muzzle stabilizer	1		

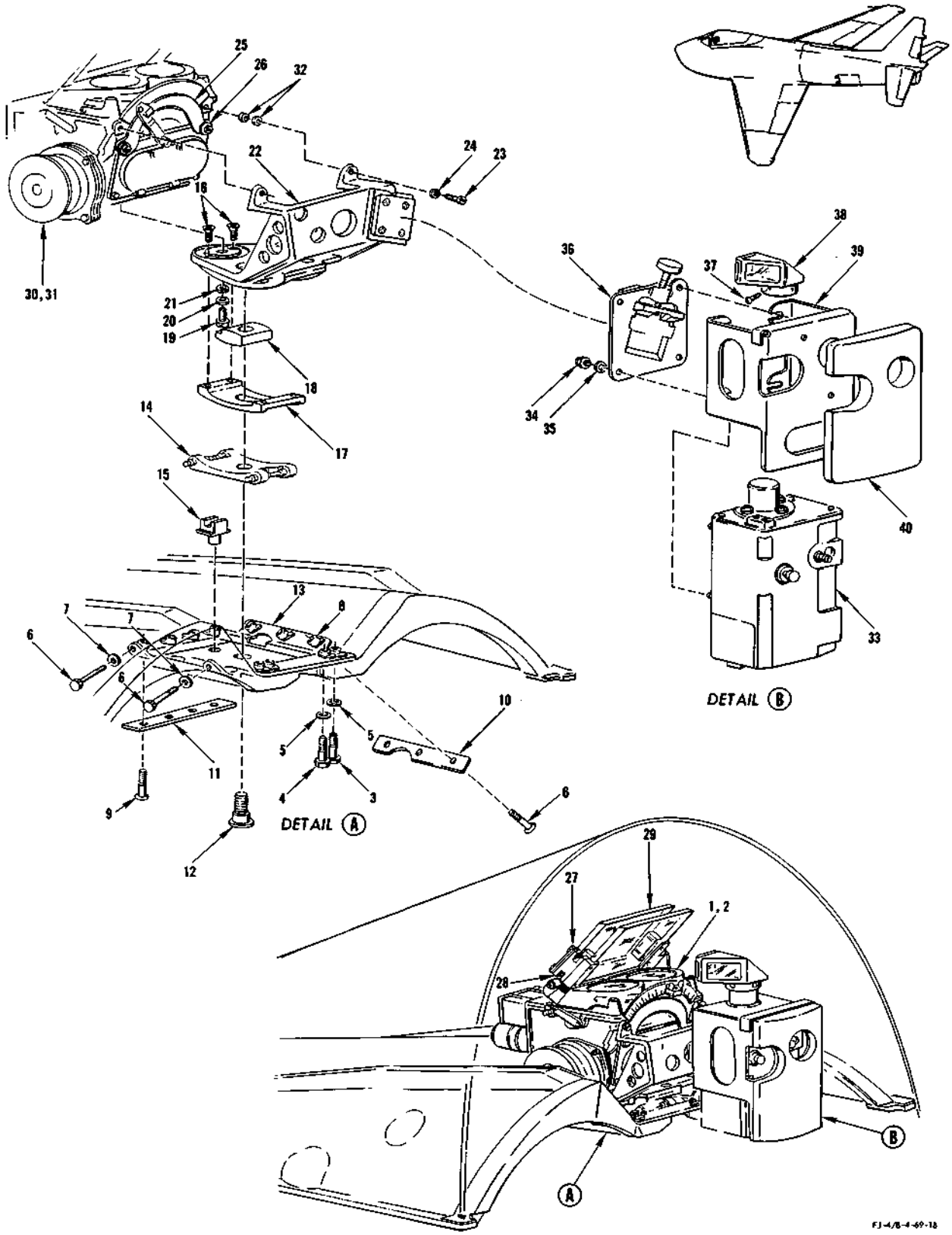

FIGURE 330 - MK-8 MOD-8 SIGHT HEAD AND AN-N-6A CAMERA EQUIPMENT

MK-8 MOD-8 SIGHT HEAD AND AN-N-6A CAMERA EQUIPMENT

FIGURE & INDEX NO.	PART NUMBER	1	2	3	4	5	6	7	NOMENCLATURE	UNITS PER ASSY.	USABLE ON CODE	S/C NO.
330	209-66110	PACKAGE, AN-N-6A camera installation								1		
	209-69001	.	SIGHT INSTALLATION, MK-8 MOD-8 sight head							1		
-1	209-69005	.	.	UNIT ASSEMBLY, MK-8 MOD-8 GUN SIGHT						1	QF	
-2	209-69005-11	.	.	UNIT ASSEMBLY, MK-8 MOD-8 GUN SIGHT						1	KL	
	ATTACHING PARTS											
-3	NAS501-3-12A *1	.	.	BOLT						2		
-4	NAS501-3-11A *1	.	.	BOLT						2		
-5	2W17-10M *1	.	.	WASHER, Corrosion-resistant steel (NA) (89372)						4		
-6	NAS501-3-7A *1	.	.	BOLT						5		
-7	2W17-10M *1	.	.	WASHER, Corrosion-resistant steel (NA) (89372)						2		
-8	2W18-10M	.	.	WASHER, Flat (NA) (89372) (shim as required between 209-31841 and 53472 (HUEN) (92543)						AR		
-9	NAS501-3-6A *1	.	.	BOLT						4		
	534C	.	.	.	MOUNT ASSEMBLY (HUEN) (92543) (supersedes 534B (HUEN) (92543) for future procurement)					1		
-10	53424	.	.	.	.	WASHER (HUEN) (92543) (to be countersunk to match 7S21-10-15 (NA) (89372)				1		
-11	53423	.	.	.	.	WASHER (HUEN) (92543) (to be countersunk to match 7S21-10-15 (NA) (89372)				1		
-12	53401	.	.	.	.	STUD (HUEN) (92543)				1		
-13	53472	.	.	.	.	BASE ASSEMBLY (HUEN) (92543)				1		
-14	53468	.	.	.	.	PLATE, Adjusting (HUEN) (92543)				1		478
-15	53457	.	.	.	.	YOKE (HUEN) (92543)				1		
-16	53461	.	.	.	.	SCREW (HUEN) (92543)				4		
-17	53460	.	.	.	.	PLATE, Serrated (HUEN) (92543)				1		
-18	53470	.	.	.	.	WASHER (HUEN) (92543)				1		
-19	53403	.	.	.	.	SCREW (HUEN) (92543)				1		
-20	2W1C-21-24-063	.	.	.	WASHER, Plain (NA) (89372)					1		
-21	MS35337-83	.	.	.	WASHER					1		
-22	53451	.	.	.	.	HOUSING (HUEN) (92543)				1		
-23	AN500C6-8	.	.	.	SCREW					2		
-24	AN936A6	.	.	.	WASHER					2		
-25	209-69030	.	.	.	BRAKE, MK-8 MOD-8 target span lever					1		
-26	AN936A6	.	.	.	WASHER					2		
-27	AN520-4R19	.	.	.	SCREW					4	QF	
-28	209-69029	.	.	.	SPACER, Sight head reflector mounting					2	QF	
-29	TOE3-301	.	.	.	REFLECTOR ASSEMBLY, MK-8 MOD-8 (Thompson Optical Engineering Company) (interchangeable with 07-059-02 (BRAY) (80792))					1	QF	
-30	No Number	.	.	.	SIGHT UNIT (MK-8 MOD-8) (GFP)					1	QF	
-31	No Number	.	.	.	SIGHT UNIT (MK-8 MOD-8) (GFP) (includes TOE 3-301 (Thompson Optical Engineering Company) or 07-059-02 (BRAY) (80792), 209-69029 (2 required) and AN509-4R19 (4 required)					1	KL	
-32	53418	.	.	.	SHIM (HUEN) (92543)					4		
-33	AN-N-6A	.	.	CAMERA (GFP)						1		
-34	AN363C1032	.	NUT							4		
-35	2W17-10M	.	WASHER, Corrosion-resistant steel (NA) (89372)							4		
-36	53416	.	ADAPTER (HUEN) (92543)							1		
-37	AN515-2-3	.	SCREW							4		
-38	1-1003-1A	.	ERECTOR HEAD (W.I. Mann and Co) (92310)							1		
	209-66027-11	.	BRACKET ASSEMBLY, AN-N-6A camera pad							1		
-39	209-66027	.	.	BRACKET, AN-N-6A camera pad bracket assembly						1		
-40	209-66030	.	.	PAD, AN-N-6A camera						1		

NOTE: *1 534C (HUEN) (92543) together with NAS501-3-6A, NAS501-3-7A, NAS501-3-12A, and 2W17-10M supersede 534B (HUEN) (92543) together with 7S21-10-18 (NA) (89372), 7S21-10-15 (NA) (89372), 2W17-10M (NA) (89372) and AN364-1032

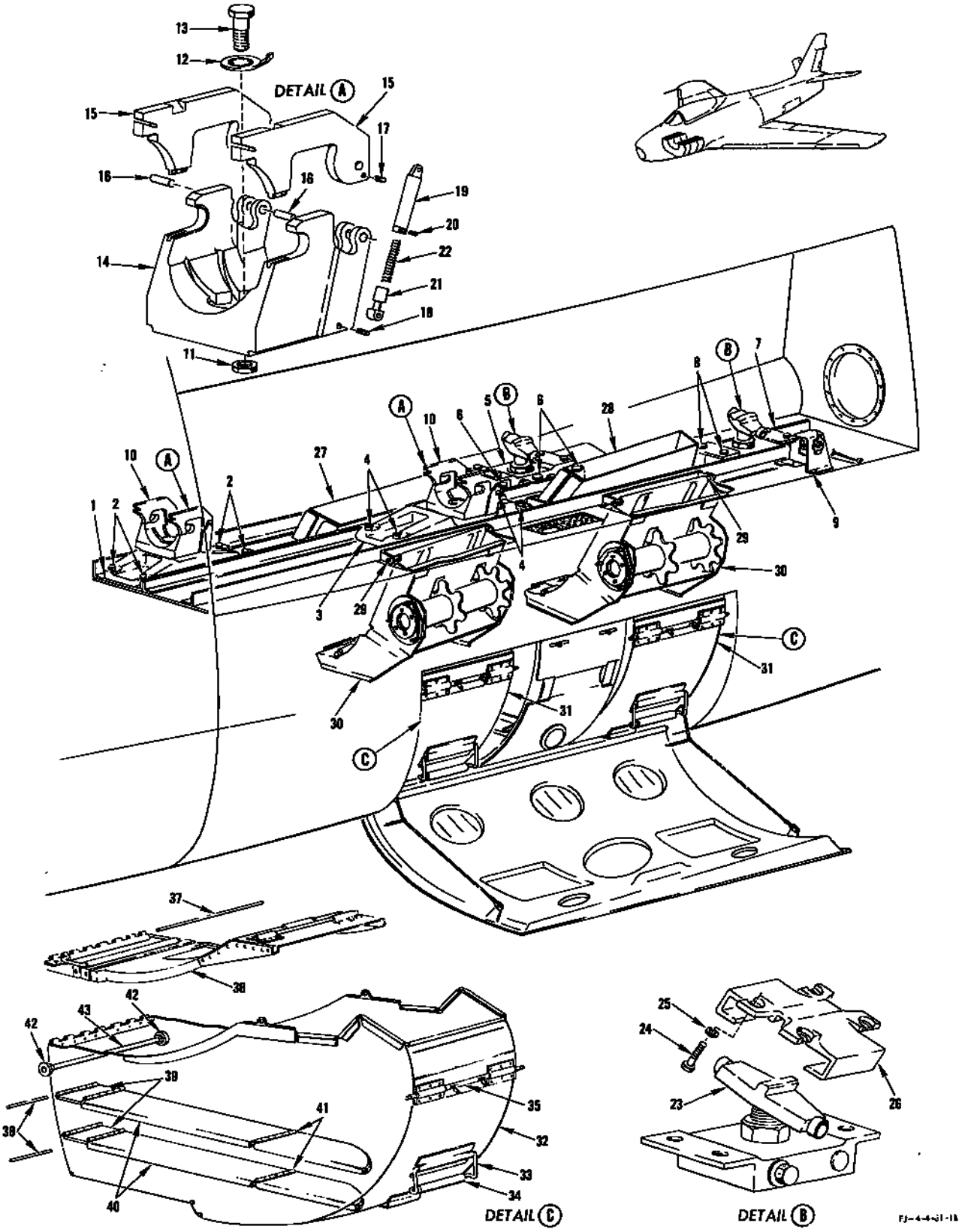

FIGURE 331 - 20MM GUN MOUNT SUPPORTS, AMMO CANS AND BOOSTER MOTORS

EXTERNAL STORES PYLON AT BL 105 (1200 POUND) - APPLICABLE TO AIRCRAFT CODED (ET)

FIGURE & INDEX NO.	PART NUMBER	1 2 3 4 5 6 7 NOMENCLATURE	UNITS PER ASSY.	USABLE ON CODE	S/C NO.
333	209-89851-30	PACKAGE, Provision for external stores (see Electrical and Instrument for additional breakdown)	1	JQ	
	209-89851-70	PACKAGE, Provision for external stores (see Electrical and Instrument for additional breakdown)	1	JS	
-1	209-63013	PYLON ASSEMBLY, 1200 pound bomb	1	ET	
	ATTACHING PARTS				
-2	MS20010H20	BOLT	1	ET	
-3	MS20002C10	WASHER	1	ET	
-4	600-001-5/8	STAT-O-SEAL (WFRC) (83259)	1	ET	
-5	AN6227B13	PACKING	1	ET	
-6	MS20009H20	BOLT	3	ET	
-7	MS20002C9	WASHER	3	ET	
-8	209-63004	BUSHING, Inboard pylon attaching	1	ET	
-9	MS20008H18	BOLT	1	ET	
-10	2W18-616	WASHER, Flat (NA) (89372)	1	ET	
-11	AN509-10R14	SCREW	2	ET	
	---*---				
-12	209-63147	DOOR ASSEMBLY, Fairing forward access	1	ET	
	209-63147-3	DOOR, Fairing forward access door assembly	1	ET	
	99836	PIN (UC) (61864)	6	ET	
	98265-1-.130	STUD (UC) (61864)	6	ET	
-13	AN509-10R6	SCREW	23	ET	
-14	209-63041	FAIRING ASSEMBLY, BL 105 pylon forward	1	ET	
-15	209-63041-15	SEAL, BL 105 pylon forward fairing assembly	1	ET	
-16	209-63042	FAIRING ASSEMBLY, Lower center pylon	1	ET	
	ATTACHING PARTS				
	AN509-10R9	SCREW	71	ET	
	---*---				
	209-63042-5	SEAL, Lower center pylon fairing assembly	1	ET	
	209-63042-15	SEAL, Lower center pylon fairing assembly	1	ET	
-17	209-63157	DOOR ASSEMBLY, Center fairing forward	1	ET	
	ATTACHING PARTS				
	AN509-10R11	SCREW	5	ET	
	---*---				
	H-6095D-5.0-064-188A	HINGE (HWL) (83014)	1	ET	
	H-5000-064-125	LATCH (HWL) (83014)	2	ET	
-18	209-63158	DOOR ASSEMBLY, Center fairing aft	1	ET	
	ATTACHING PARTS				
	AN509-10R11	SCREW	6	ET	
	---*---				
	H-6095D-4.0-064-188A	HINGE (HWL) (83014)	1	ET	
	H-5000-069-125	LATCH (HWL) (83014)	2	ET	
-19	209-63148	DOOR ASSEMBLY, Aft fairing access	1	ET	
	ATTACHING PARTS				
	AN509-10R9	SCREW	7	ET	
	---*---				
	209-63148-9	SEAL, Aft fairing access door assembly	1	ET	
	209-63148-15	HINGE PIN, Aft fairing access door assembly (make from AN253-2-9.25)	1	ET	
	99836	PIN (UC) (61864)	11	ET	
	98265-1-.120	STUD (UC) (61864)	1	ET	
	98265-2-.180	STUD (UC) (61864)	10	ET	
-20	209-63043	FAIRING ASSEMBLY, Pylon rear	1	ET	
	ATTACHING PARTS				
	AN509-10R9	SCREW	22	ET	
	---*---				
-21	209-63043-41	DOOR, Pylon rear fairing assembly	1	ET	
	209-63043-49	HINGE, Pylon rear fairing assembly	1	ET	
	99836	PIN (UC) (61864)	3	ET	
	98265-1-.120	STUD (UC) (61864)	3	ET	
-22	209-63043	SEAL, Pylon rear fairing assembly	2	ET	
-23	187-63160	SEAL, Molded synthetic sponge rubber	1	ET	
-24	187-63161	RETAINER, 1200 pound external stores seal	1	ET	
	ATTACHING PARTS				
	AN515-4R8	SCREW	6	ET	
	AN515-4R10	SCREW	2	ET	
	AN507-440R8	SCREW	2	ET	
	AN365-440	NUT	10	ET	
	---*---				
-25	209-63149-11	FAIRING SUPPORT	1	ET	
	ATTACHING PARTS				
	AN509-10R9	SCREW	4	ET	
	---*---				
-26	209-63141	FAIRING ASSEMBLY, Pylon center support outboard	1	ET	
	ATTACHING PARTS				
	AN509-10R9	SCREW	8	ET	
	---*---				
-27	209-63141-7	SEAL, Pylon center support outboard fairing assembly	1	ET	
-28	AN509-816-60	SCREW	4	ET	
	2W18-816	WASHER, Flat (NA) (89372)	4	ET	
	AN364-820	NUT	4	ET	
-29	209-63136	DOOR ASSEMBLY, Strut seal pylon forward	1	ET	
	ATTACHING PARTS				
	AN509-10R9	SCREW	3	ET	
	---*---				
-30	209-63134	DOOR, Pylon assembly forward access	1	ET	

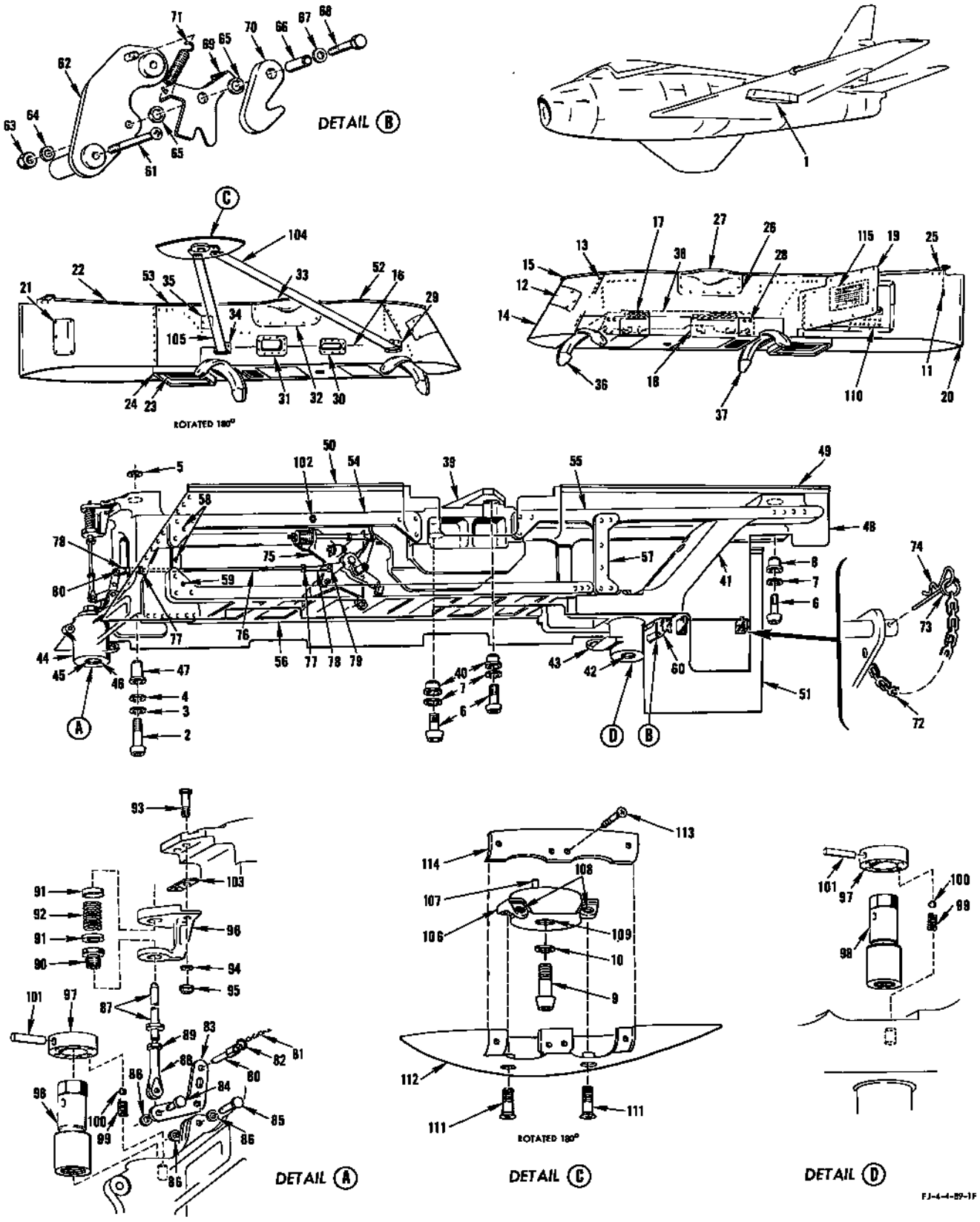

FIGURE 333 - EXTERNAL STORES PYLON AT BL 105 (1200 POUND) - APPLICABLE TO AIRCRAFT CODED (ET)

EXTERNAL STORES PYLON AT BL 105 (1200 POUND) - APPLICABLE TO AIRCRAFT CODED (ET)

FIGURE & INDEX NO.	PART NUMBER	1	2	3	4	5	6	7	NOMENCLATURE	UNITS PER ASSY.	USABLE ON CODE	S/C NO.
333	ATTACHING PARTS											
	AN509-10R9								SCREW	10	ET	
	---*---											
-31	209-63135								DOOR, Pylon assembly access aft	1	ET	
	ATTACHING PARTS											
	AN509-10R9								SCREW	14	ET	
	---*---											
-32	209-63142								FAIRING ASSEMBLY, Pylon center support inboard	1	ET	
	ATTACHING PARTS											
	AN509-10R9								SCREW	7	ET	
	---*---											
-33	209-63142-7								. SEAL, Pylon center support inboard fairing assembly	1	ET	
-34	209-63137								DOOR ASSEMBLY, Strut seal pylon aft	1	ET	
	ATTACHING PARTS											
	AN509-10R9								SCREW	3	ET	
	---*---											
-35	209-63133								DOOR ASSEMBLY, Swaybrace adjusting access	1	ET	
	99836								. PIN (UC) (61864)	1	ET	
	98265-2-.160								. STUD (UC) (61864)	1	ET	
	209-63133-11								. PIN, Swaybrace adjusting access door assembly	1	ET	
-36	209-63050-3								SWAYBRACE, Forward	1	ET	
-37	209-63050-5								SWAYBRACE, Aft	1	ET	
-38	No Number								RACK (Aero 65) (GFP)	1	ET	
	48A99H1								ADAPTER (GFP)	1	ET	
	209-63048								FRAME ASSEMBLY, 1200 pound store pylon	1	ET	
-39	209-63057-11								. SUPPORT ASSEMBLY, Pylon center	1	ET	
	ATTACHING PARTS											
	AN509-416R16								. SCREW	4	ET	
	AN509-416R14								. SCREW	12	ET	
	2W18-416M								. WASHER, Flat (NA) (89372)	16	ET	
	AN365-428								. NUT	16	ET	
	---*---											
-40	209-63004								. BUSHING, Inboard pylon attaching	2	ET	
-41	209-63045-11								SUPPORT ASSEMBLY, Pylon aft	1	ET	
	ATTACHING PARTS											
	AN509-416R16								. SCREW	22	ET	
	2W18-416M								. WASHER, Flat (NA) (89372)	22	ET	
	AN365-428								. NUT	22	ET	
	---*---											
-42	209-63005								. BUSHING, Swaybrace	1	ET	
-43	LSS6								. BEARING, Spherical (HEC) (73134)	1	ET	
-44	209-63044-11								SUPPORT, Pylon front	1	ET	
-45	209-63005								. BUSHING, Swaybrace	1	ET	
-46	LSS6								. BEARING, Spherical (HEC) (73134)	1	ET	
-47	209-63006								. BUSHING, Inboard pylon attaching forward	1	ET	
-48	209-63101								PLATE ASSEMBLY, Pylon frame outboard	1	ET	
-49	209-63101-11								. SEAL, Pylon frame outboard plate assembly	1	ET	
-50	209-63101-9								. SEAL, Pylon frame outboard plate assembly	1	ET	
-51	209-63049								PLATE ASSEMBLY, Pylon frame BL 103	1	ET	
-52	209-63049-9								. SEAL, Pylon frame BL 103 plate assembly	1	ET	
-53	209-63049-11								. SEAL, Pylon frame BL 103 plate assembly	1	ET	
-54	209-63069								CHANNEL, Pylon frame upper forward	1	ET	
	ATTACHING PARTS											
	AN509-416R16								. SCREW	12	ET	
	AN509-416R12								. SCREW	12	ET	
	2W18-416M								. WASHER, Flat (NA) (89372)	24	ET	
	AN365-428								. NUT	24	ET	
	---*---											
-55	209-63111								CHANNEL, Pylon frame lower	1	ET	
	ATTACHING PARTS											
	AN509-416R16								. SCREW	6	ET	
	AN509-416R12								. SCREW	18	ET	
	2W18-416M								. WASHER, Flat (NA) (89372)	24	ET	
	AN365-428								. NUT	24	ET	
	---*---											
-56	209-63118								CHANNEL, Pylon frame lower	1	ET	
	ATTACHING PARTS											
	AN509-416R27								. SCREW	6	ET	
	AN509-416R16								. SCREW	6	ET	
	AN509-416R12								. SCREW	34	ET	
	2W18-416M								. WASHER, Flat (NA) (89372)	46	ET	
	AN365-428								. NUT	46	ET	
	---*---											
-57	209-63119-1								. ANGLE, Pylon vertical stiffener LH	1	ET	
	209-63119-2								. ANGLE, Pylon vertical stiffener RH	1	ET	
	ATTACHING PARTS											
	AN509-416R16								. SCREW	6	ET	
	2W18-416M								. WASHER, Flat (NA) (89372)	6	ET	
	AN365-428								. NUT	6	ET	
	---*---											
-58	AN509-416R16								. SCREW	4	ET	
	2W18-416M								. WASHER, Flat (NA) (89372)	4	ET	
	AN365-428								. NUT	4	ET	

EXTERNAL STORES PYLON AT BL 105 (1200 POUND) - APPLICABLE TO AIRCRAFT CODED (ET)

FIGURE & INDEX NO.	PART NUMBER	1	2	3	4	5	6	7	NOMENCLATURE	UNITS PER ASSY.	USABLE ON CODE	S/C NO.
333-59	AN509-416R27								SCREW	2	ET	
	2W18-416M								WASHER, Flat (NA) (89372)	2	ET	
	AN365-428								NUT	2	ET	
-60	209-63174								LATCH ASSEMBLY, Arming wire retainer	1	ET	
	ATTACHING PARTS											
-61	AN509-10R46								SCREW	2	ET	
	2W18-10M								WASHER, Flat (NA) (89372)	2	ET	
	AN365-1032								NUT	2	ET	
	---*---											
-62	209-63150								SUPPORT ASSEMBLY, Arming wire latch	1	ET	
	AN393-13								PIN	1	ET	
-63	AN365-1032								NUT	1	ET	
-64	2W18-10								WASHER, Flat (NA) (89372)	1	ET	
-65	2W18-616M								WASHER, Flat (NA) (89372)	2	ET	
-66	NAS43-3-30								SPACER	1	ET	
-67	2W18-416								WASHER, Flat (NA) (89372)	1	ET	
-68	AN3-10A								BOLT	1	ET	
-69	209-63172								LEVER, Arming wire retainer	1	ET	
-70	209-63171								HOOK, Arming wire retainer	1	ET	
-71	209-63173								SPRING, Tension	1	ET	
-72	9C1-2-5								CHAIN, Safety (NA) (89372)	2	ET	
-73	5R10								RING, Chain retainer (NA) (89372)	2	ET	
-74	AN415-2								PIN	2	ET	
-75	209-63061								MECHANISM ASSEMBLY, Mechanical release (see figure 336 for breakdown)	1	ET	
-76	209-63018								CONNECTING ROD, Mechanical release	1	ET	
	ATTACHING PARTS											
-77	AN316-4R								NUT	2	ET	
-78	AN665-34R								TERMINAL	2	ET	
-79	AN394-17								PIN	1	ET	
	2W18-416M								WASHER, Corrosion-resistant steel (NA) (89372)	2	ET	
	---*---											
-80	BL-4-0.500								BALL-LOK PIN (D. W. Price Corp.) (97978)	1	ET	
-81	9C1-2-5								CHAIN, Safety (NA) (89372)	1	ET	
-82	5R10								RING, Chain retainer (NA) (89372)	1	ET	
-83	209-63017								BELLCRANK, Mechanical release forward	1	ET	
	ATTACHING PARTS											
-84	AN394-17								PIN	1	ET	
-85	AN394-25								PIN	1	ET	
-86	2W17-416M								WASHER, Corrosion-resistant steel (NA) (89372)	3	ET	
	---*---											
-87	209-63209								PLUNGER, Mechanical release (supersedes 209-63009 for future procurement)	1	ET	
-88	209-63189								TERMINAL, 1200 pound pylon	1	ET	
-89	AN364-428								NUT	1	ET	
-90	209-63008								BUSHING, Mechanical release plunger (install with AN995F47 wire)	1	ET	
-91	209-63036								RETAINER, Plunger spring	2	ET	
-92	169-31344								SPRING, Compression	1	ET	
-93	AN3-11A								BOLT	2	ET	
-94	2W18-10								WASHER, Flat (NA) (89372)	2	ET	
-95	AN365-1032								NUT	2	ET	
-96	209-63184-11								GUIDE, Mechanical release plunger	1	ET	
-97	209-63053								COLLAR, Swaybrace detent	2	ET	
-98	209-63052								SHAFT, Swaybrace adjusting	2	ET	
-99	209-63091								SPRING, Compression	2	ET	
-100	No Number								BALL, 3/16 diameter (STSB) (78281)	2	ET	
-101	52-040-187-1500								ROLL PIN (EN) (72962)	2	ET	
-102	209-63143								FITTING, Pylon hoist bracket	2	ET	
-103	209-63185								PLATE, Serrated	1	ET	
-104	209-63059								STRUT ASSEMBLY, Forward	1	ET	
	ATTACHING PARTS											
	AN509-616R24								SCREW	2	ET	
	2W18-616M								WASHER, Flat (NA) (89372)	2	ET	
	AN365-624								NUT	2	ET	
	---*---											
	209-63040								FITTING, Strut upper end	2	ET	
-105	209-63060								STRUT ASSEMBLY, Aft	1	ET	
	ATTACHING PARTS											
	AN509-616R24								SCREW	2	ET	
	2W18-616M								WASHER, Flat (NA) (89372)	2	ET	
	AN365-624								NUT	2	ET	
	---*---											
	209-63040								FITTING, Strut upper end	2	ET	
-106	209-63064-11								FITTING ASSEMBLY, Strut to wing attach (magnetic inspect)	1	ET	
	209-63064-3								FITTING, Strut to wing attach	1	ET	
-107	209-63062								PIN, Strut fitting alignment	1	ET	
-108	LSS6								BEARING (HEC) (73134)	2	ET	
-109	209-63093								BUSHING, Outboard pylon aft attaching	1	ET	
-110	209-543103								BOX ASSEMBLY, Electrical T208A system B fuse and relay pylon LH side (see Electrical and Instrument)	1	ET	

EXTERNAL STORES PYLON AT BL 105 (1200 POUND) - APPLICABLE TO AIRCRAFT CODED (ET)

FIGURE & INDEX NO.	PART NUMBER	1	2	3	4	5	6	7	NOMENCLATURE	UNITS PER ASSY.	USABLE ON CODE	S/C NO.
333-111	AN509-416R26	.	SCREW							2	ET	
-112	209-63144	.	FAIRING, Strut fitting 1200 pound pylon							1	ET	
-113	AN509-10R8	.	.	SCREW						3	ET	
-114	209-63144-15	.	.	DOOR, Strut fitting 1200 pound pylon fairing						1	ET	
-115	209-63188	.	.	DECAL, Aero 65 release mechanism						1	ET	

EXTERNAL STORES PROVISION PACKAGES AT BL 105 - APPLICABLE TO AIRCRAFT CODED (FR)

FIGURE & INDEX NO.	PART NUMBER		NOMENCLATURE	UNITS PER ASSY.	USABLE ON CODE	S/C NO.
334	209-63202-21	*1	PACKAGE, Provision for external stores (see Electrical and Instrument for additional breakdown)	1	KX	524,482,537
	209-63202-121	*2	PACKAGE, Provision for external stores (see Electrical and Instrument for additional breakdown)	1	FR	524, 537
	209-63202-221		PACKAGE, Provision for external stores (see Electrical and Instrument for additional breakdown)	1	FR	
	209-63413-1		. PYLON ASSEMBLY, BL 105 universal LH (used on 209-63202-21 package) (superseded by 209-63413-71 for future procurement)	1	KX	524, 482
	209-63413-71		. PYLON ASSEMBLY, BL 105 universal LH (used on 209-63209-121 package) (supersedes 209-63413-1 and superseded by 209-63413-101 for future procurement)	1	FR	524, 537
	209-63413-2		. PYLON ASSEMBLY, BL 105 universal RH (used on 209-63202-21 and 209-63202-121 packages) (superseded by 209-63413-102 for future procurement)	1	FR	524, 537
	209-63413-101		. PYLON ASSEMBLY, BL 105 universal LH (used on 209-63202-221 package) (supersedes 209-63413-71 for future procurement)	1	FR	
	209-63413-102		. PYLON ASSEMBLY, BL 105 universal RH (used on 209-63202-221 package) (supersedes 209-63413-2 for future procurement)	1	FR	
	ATTACHING PARTS					
-1	MS20010H20		. BOLT	1	FR	
-2	MS20002C10		. WASHER	1	FR	
-3	600-001-5/8		. STAT-O-SEAL (WFRC) (83259)	1	FR	
-4	AN6227B13		. PACKING	1	FR	
-5	MS20009H20		. BOLT	2	FR	
-6	MS20002C9		. WASHER	2	FR	
-7	600-001-9/16		. STAT-O-SEAL (WFRC) (83259)	2	FR	
-8	AN6227B12		. PACKING	2	FR	
-9	MS20009H20		. BOLT	2	FR	
-10	MS20002C9		. WASHER	2	FR	
-11	600-001-9/16		. STAT-O-SEAL (WFRC) (83259)	2	FR	
-12	209-63004		. BUSHING, Inboard pylon attaching	2	FR	
-13	AN6227B12		. PACKING	2	FR	
	---*---					
-14	AN509-10R11		. . SCREW	6	FR	
-15	AN509-10R14		. . SCREW	4	FR	
	2W18-10		. . WASHER, Flat (NA) (89372)	10	FR	
	AN365-1032		. . NUT	10	FR	
	209-63254		. . FAIRING ASSEMBLY, BL 105 universal pylon forward (superseded by 209-63254-11 for future procurement)	1	KX	482
-16	209-63254-11		. . FAIRING ASSEMBLY, BL 105 universal pylon forward (supersedes 209-63254 and superseded by 209-63254-21 for future procurement)	1	FR	
	209-63254-21		. . FAIRING ASSEMBLY, BL 105 universal pylon forward (supersedes 209-63254-11 for future procurement) (used on the 209-63413-71 and 209-63413-101 pylon)	1	FR	
-17	URF5		. . . RECEPTACLE (DZ) (72794)	2	FR	
	209-63259		. . . RETAINER ASSEMBLY, BL 105, universal pylon fairing (used on the 209-63254 and 209-63254-11 only)	3	KX	482
	209-63259-11		. . . RETAINER ASSEMBLY, BL 105, universal pylon fairing (used on the 209-63254-21 fairing only)	3	FR	
-18	79-028-125-0625		. . . . ROLLPIN (EN) (72962)	1	FR	
-19	209-63261-3		. . . . BOLT, BL 105 universal pylon fairing (used on 209-63259)	1	KX	482
	209-63261-5		. . . . BOLT, BL 105 universal pylon fairing (used on 209-63259-11)	1	FR	
-20	209-63260		. . . . RETAINER, BL 105 universal pylon fairing	1	FR	
-21	209-63359		. . . SPACER, BL 105 universal pylon forward lower fairing (used on 209-63254-21)	3	FR	
-22	209-63241-1		. . FAIRING ASSEMBLY, BL 105 universal pylon forward upper LH (used on 209-63413-1 pylon) (superseded by 209-63241-11 for future procurement)	1	KX	
	209-63241-11		. . FAIRING ASSEMBLY, BL 105 universal pylon forward upper (used on 209-63413-71 pylon only) (supersedes 209-63241-1 for future procurement) (superseded by 209-63241-31 for future procurement)	1	FR	
	209-63241-2		. . FAIRING ASSEMBLY, BL 105, universal pylon forward upper RH (superseded by 209-63241-32 for future procurement)	1	FR	
-23	209-63241-31		. . FAIRING ASSEMBLY, BL 105 universal pylon forward upper LH (used on 209-63413-101 pylon) (supersedes 209-63241-11 for future procurement)	1	FR	
	209-63241-32		. . FAIRING ASSEMBLY, BL 105 universal pylon forward upper RH (used on 209-63413-102 pylon) (supersedes 209-63241-2 for future procurement)	1	FR	
-24	244-63233-1	*3	. . . CLIP, Universal pylon release handle LH (used on 209-63241-31 and 209-63241-32 fairing assemblies)	1	FR	
-25	244-63233-2	*3	. . . CLIP, Universal pylon release handle RH (used on 209-63241-31 and 209-63241-32 fairing assemblies)	1	FR	
-26	244-63232	*3	. . . BRACKET, Universal pylon rack release cable stow assembly of (used on 209-63241-31 and 209-63241-32 fairing assemblies)	1	FR	
	244-63232-3		. . . . BRACKET, Universal pylon rack release cable stow subassembly	1	FR	
	244-63244		. . . . LATCH, Universal pylon rack release cable stow	1	FR	
	AN253-2-1562		. . . . PIN	1	FR	
-27	209-63241-29		. . . HINGE, BL 105 universal pylon forward upper fairing assembly	1	FR	
	209-63241-43		. . . HINGE, BL 105 universal pylon forward upper fairing assembly	1	FR	
-28	209-63241-35		. . . HINGE, BL 105 universal pylon forward upper fairing assembly	1	FR	
	209-63241-45		. . . HINGE, BL 105 universal pylon forward upper fairing assembly	1	FR	

EXTERNAL STORES PROVISION PACKAGES AT BL 105 - APPLICABLE TO AIRCRAFT CODED (FR)

FIGURE & INDEX NO.	PART NUMBER	1	2	3	4	5	6	7	NOMENCLATURE	UNITS PER ASSY.	USABLE ON CODE	S/C NO.
334-29	209-63234-7		.	.	.				SPRING, External stores pylon (torsion)	2	FR	
	AN253-2-178		.	.	.				PIN	1	FR	
	AN253-2-287		.	.	.				PIN	1	FR	
-30	BL-HG-6-5.125		.	.	.				PIN (D. W. Price Corp) (97978)	1	FR	
-31	9C1-2-7		.	.	.				CHAIN, Safety (NA) (89372)	1	FR	
	5R10		.	.	.				RING, Chain retainer (NA) (89372)	2	FR	
-32	244-63210		.	.	CABLE ASSEMBLY, Store arming pull-out BL 105 universal pylon forward (used on 209-63413-71 pylon) (superseded by 244-63230 for future procurement)					1	FR	537
	244-63210-3		.	.	.	CABLE SUBASSEMBLY, Store arming pull-out BL 105 universal pylon forward				1	KY	
	AN100C5		.	.	.	THIMBLE				1	KY	
	28-3-M		.	.	.	SPLICE (NTS) (76691)				1	KY	
	AN667-4		.	.	.	TERMINAL				1	KY	
	AN416-2		.	.	.	PIN				1	KY	
	AN393-13		.	.	.	PIN				1	KY	
-33	244-63230	*3	.	.	RETAINER, Universal pylon arming wire assembly of (supersedes 244-63210 for future procurement) (used on 209-63413-102 pylon)					1	FR	
-34	244-63230-3		.	.	.	CABLE				1	FR	
-35	AN664C2		.	.	.	BALL				2	FR	
-36	RA2487-2		.	.	.	BALL (ACA) (01976)				2	FR	
-37	244-63231		.	.	.	FITTING				1	FR	
-38	MS20392-2-19		.	.	.	PIN				1	FR	
-39	AN416-2		.	.	.	PIN				1	FR	
-40	244-63237	*3	.	.	HANDLE, Universal pylon rack release					1	FR	
	209-63241-22		.	.	.	FAIRING SUBASSEMBLY, BL 105 universal pylon forward upper RH				1	FR	
	209-63241-21		.	.	.	FAIRING SUBASSEMBLY, BL 105 universal pylon forward upper LH				1	FR	
-41	209-63241-7		.	.	.	.	DOOR, BL 105 universal pylon forward upper fairing subassembly LH			1	FR	
	209-63241-8		.	.	.	.	DOOR, BL 105 universal pylon forward upper fairing assembly RH			1	FR	
-42	H-5000-064-142		.	.	.	.	LATCH (HWL) (83014)			2	FR	
-43	209-63356		.	.	.	SEAL, BL 105 universal pylon forward electrical plug assembly of (used on 209-63241-11 fairing)				1	KY	
-44	209-63357		.	.	.	RETAINER ASSEMBLY, BL 105 universal pylon forward electrical plug (used on 209-63241-11 fairing)				1	KY	
-45	209-63357-5		.	.	.	.	HINGE, BL 105 universal pylon forward electrical plug retainer assembly			1	KY	
-46	209-63357-7		.	.	.	.	HINGE, BL 105 universal pylon forward electrical plug retainer assembly			1	KY	
-47	AN253-2-325		.	.	.	.	PIN			1	KY	
-48	98293-2-.220		.	.	.	.	STUD (UC) (61864)			5	KY	
	99785-2		.	.	.	.	PIN (UC) (61864)			5	KY	
	99871-P-.098		.	.	.	RECEPTACLE (UC) (61864)				5	KY	
-49	AN4-7A		.	.	BOLT					3	FR	
-50	NAS43-4-12		.	.	SPACER					3	FR	
-51	2W1-16-22-63		.	.	WASHER, Plain (NA) (89372)					3	FR	
-52	NAS50-300		.	.	RING					1	FR	
-53	7800		.	.	VALVE, Fuel check pylon fitting (Benton Corp.) (98656)					1	FR	
-54	MS29513-224		.	.	.	PACKING				1	FR	
-55	MS29513-232		.	.	PACKING					1	FR	
-56	209-482112		.	.	FITTING ASSEMBLY, Fuel buddy tank universal pylon					1	FR	
	3651-32D		.	.	COUPLING, Flexible half (WIG) (79326)					1	FR	
-57	3601-3		.	.	.	NUT (WIG) (79326)				1	FR	
-58	3601-15		.	.	.	GLAND (WIG) (79326)				1	FR	
-59	3601-9		.	.	.	WASHER (WIG) (79326)				1	FR	
-60	MS29513-329		.	.	PACKING					1	FR	
-61	209-482113-1		.	.	FITTING, Fuel buddy tank universal pylon wing LH (superseded by 209-482113-3 for future procurement)					1	FR	
	209-482113-2		.	.	FITTING, Fuel buddy tank universal pylon wing RH (superseded by 209-482113-4 for future procurement)					1	FR	
	209-482113-3		.	.	FITTING, Fuel buddy tank universal pylon wing LH (supersedes 209-482113-1 for future procurement)					1	FR	
	209-482113-4		.	.	FITTING, Fuel buddy tank universal pylon wing RH (supersedes 209-482113-2 for future procurement)					1	FR	
	209-63247-1		.	.	FAIRING ASSEMBLY, BL 105 universal pylon center upper LH					1	FR	
	209-63247-2		.	.	FAIRING ASSEMBLY, BL 105 universal pylon center upper RH					1	FR	
-62	209-63247-3		.	.	.	FAIRING, BL 105 universal pylon center upper fairing assembly (outboard)				1	FR	
-63	209-63247-4		.	.	.	FAIRING, BL 105 universal pylon center upper fairing assembly (inboard)				1	FR	
-64	UF5T-20		.	.	.	STUD (DZ) (72794)				4	FR	
	GH5		.	.	.	GROMMET (DZ) (72794)				4	FR	
-65	UF5T-50		.	.	.	STUD (DZ) (72794)				8	FR	
	GH5		.	.	.	GROMMET (DZ) (72794)				8	FR	
	209-63255-1		.	.	FAIRING ASSEMBLY, BL 105 universal pylon LH center lower (outboard) (superseded by 209-63255-41 for future procurement)					1	FR	
	209-63255-11		.	.	FAIRING ASSEMBLY, BL 105 universal pylon LH center lower (inboard) (superseded by 209-63255-51 for future procurement)					1	FR	
-66	209-63255-41		.	.	FAIRING ASSEMBLY, BL 105 universal pylon LH center lower (outboard) (supersedes 209-63255 for future procurement)					1	FR	
-67	209-63255-51		.	.	FAIRING ASSEMBLY, BL 105 universal pylon LH center lower (inboard) (supersedes 209-63255-11 for future procurement)					1	FR	

EXTERNAL STORES PROVISION PACKAGES AT BL 105 - APPLICABLE TO AIRCRAFT CODED (FR)

FIGURE & INDEX NO.	PART NUMBER	1	2	3	4	5	6	7	NOMENCLATURE	UNITS PER ASSY.	USABLE ON CODE	S/C NO.
334-68	209-63271	.	.	.	DOOR ASSEMBLY, BL 105 universal pylon access					4	FR	
-69	209-63271-3	.	.	.	.	HINGE, BL 105 universal pylon access door assembly				1	FR	
-70	209-63271-5	.	.	.	.	HINGE, BL 105 universal pylon access door assembly				1	FR	
-71	209-63271-7	.	.	.	.	DOOR, BL 105 universal pylon access door assembly				1	FR	
-72	AN253-1-150	.	.	.	.	PIN				1	FR	
-73	AN315C3R	.	.	.	.	NUT				1	FR	
-74	2W17-10M	.	.	.	.	WASHER, Corrosion-resistant steel (NA) (89372)				1	FR	
-75	209-63289	.	.	.	.	ARM, BL 105 universal pylon door latch				1	FR	
-76	209-63272	.	.	.	.	BLOCK, BL 105 universal pylon door				1	FR	
-77	209-63290	.	.	.	.	BOLT, BL 105 universal pylon door				1	FR	
	209-63255-21	.	.	.	FAIRING SUBASSEMBLY, BL 105 universal pylon center lower (outboard)					1	FR	
	209-63255-15	.	.	.	.	HINGE, BL 105 universal pylon center lower fairing subassembly				1	FR	
	209-63255-17	.	.	.	.	HINGE, BL 105 universal pylon center lower fairing subassembly				1	FR	
-78	209-63234-3	.	.	.	.	SPRING, External store pylon (torsion)				1	FR	
	AN253-2-200	.	.	.	.	PIN				1	FR	
-79	209-63255-19	.	.	.	.	DOOR, BL 105 universal pylon center lower fairing subassembly				1	FR	
-80	H-5000-064-125	.	.	.	.	LATCH (HWL) (83014)				1	FR	
-81	UF5T-20	.	.	.	STUD (DZ) (72794)					4	FR	
	GH5	.	.	.	GROMMET (DZ) (72794)					4	FR	
-82	UF57-50	.	.	.	STUD (DZ) (72794)					8	FR	
	GH5	.	.	.	GROMMET (DZ) (72794)					8	FR	
	209-543120	.	.	FAIRING ASSEMBLY, BL 105 universal pylon aft lower electrical LH (superseded by 209-543120-11 for future procurement) (see Electrical and Instrument) (not to be used for replacement)						1	FR	537
-83	209-543120-11	.	.	FAIRING ASSEMBLY, BL 105 universal pylon aft lower electrical LH (supersedes 209-543120 and superseded by 209-543120-21 for future procurement) (see Electrical and Instrument)						1	FR	
	209-543120-21	.	.	FAIRING ASSEMBLY, BL 105 universal pylon aft lower electrical (supersedes 209-543120-11 for future procurement) (reidentified as 244-54067 when Service Change is incorporated)						1	FR	537
	244-54067	.	.	FAIRING ASSEMBLY, BP 105 universal pylon aft lower electrical (used on 209-63413-101 pylon) (see Electrical and Instrument for additional breakdown)						1	FR	
	209-63256-1	.	.	.	FAIRING ASSEMBLY, BL 105 universal pylon aft lower (superseded by 209-63256-101 for future procurement)					1	FR	
-84	209-63256-101	.	.	.	FAIRING ASSEMBLY, BL 105 universal pylon aft lower (supersedes 209-63256-1 and superseded by 209-63256-201 for future procurement)					1	FR	
	209-63256-201	.	.	.	FAIRING, BL 105 universal pylon aft lower (used on 209-54067) (supersedes 209-63256-101 for future procurement)					1	FR	
-85	244-54075	*3	.	.	.	.	NAMEPLATE, Electrical MK-12 relay panel removal instructions (used on 209-63256-201)			1	FR	
-86	244-54041	*3	.	.	.	.	NAMEPLATE, Electrical MK-12 fairing schematic (used on 209-63256-201)			1	FR	
-87	209-63259		.	.	.	.	RETAINER ASSEMBLY, BL 105 universal pylon fairing			4	FR	
-88	79-028-125-0625		.	.	.	.	.	ROLLPIN (EN) (72962)		1	FR	
-89	209-63261-3		.	.	.	.	.	BOLT, BL 105 universal pylon fairing		1	FR	
-90	209-63260		.	.	.	.	.	RETAINER, BL 105 universal pylon fairing		1	FR	
-91	BL-HG-8-10.250		.	.	.	.	PIN (D. W. Price Corp.) (97978)			1	FR	
-92	AN507-440R6		.	.	.	.	SCREW			19	FR	
	AN365-440		.	.	.	.	NUT			19	FR	
-93	209-63265		.	.	.	.	SEAL, BL 105 universal pylon plug			1	FR	
-94	209-63266		.	.	.	.	RING, BL 105 universal pylon plug seal			1	FR	
-95	AN509-10R8		.	.	.	.	SCREW			42	FR	
	209-63256-41		.	.	.	.	FAIRING SUBASSEMBLY, BL 105 universal pylon aft lower			1	FR	
-96	209-63256-55		.	.	.	.	.	DOOR, BL 105 universal pylon aft lower fairing subassembly		1	FR	
-97	H-5000-064-188		.	.	.	.	.	LATCH (HWL) (83014)		1	FR	
	AN253-2-2438		.	.	.	.	.	PIN		1	FR	
	209-63234-3		.	.	.	.	.	SPRING, External stores pylon (torsion)		1	FR	
	209-63256-53		.	.	.	.	.	HINGE, BL 105 universal pylon aft lower fairing subassembly		1	FR	
	209-63256-71		.	.	.	.	HINGE, BL 105 universal pylon aft lower fairing assembly			1	FR	
	209-63256-21		.	.	.	.	FAIRING SUBASSEMBLY, BL 105 universal pylon aft lower			1	FR	
-98	209-63256-15		.	.	.	.	.	DOOR, BL 105 universal pylon aft lower fairing subassembly		1	FR	
-99	209-63256-85		.	.	.	.	.	LATCH, BL 105 universal pylon aft lower fairing subassembly (make from H-5000-064-188 (HWL) (83014))		2	FR	
-100	AN253-2-13375		.	.	.	.	.	PIN		1	FR	
-101	209-63234-3		.	.	.	.	.	SPRING, External store pylon (torsion)		2	FR	
-102	209-63256-29		.	.	.	.	.	HINGE, BL 105 universal pylon aft lower fairing subassembly		1	FR	
	209-63256-27		.	.	.	.	.	HINGE, BL 105 universal pylon aft lower fairing subassembly		1	FR	
-103	209-63337		.	.	.	.	TUBE ASSEMBLY, BL 105 universal pylon aft lower			1	FR	
	209-63256-31		.	.	.	.	FAIRING SUBASSEMBLY, BL 105 universal pylon aft lower			1	FR	
-104	209-63256-13		.	.	.	.	.	DOOR, BL 105 universal aft lower fairing subassembly		1	FR	
-105	209-543130		.	.	.	.	.	NAMEPLATE, Electric T-208 schematic		1	FR	482, 537
	209-543130-3		.	.	.	.	.	NAMEPLATE, Electric T-208 schematic (supersedes 209-543130 for future procurement)		1	FR	537
-106	40S5-6		.	.	.	.	.	STUD (CLC) (71286)		2	FR	
	4002-G		.	.	.	.	.	GROMMET (CLC) (71286)		2	FR	
	R4G		.	.	.	.	.	RING, Snap (CLC) (71286)		2	FR	
	244-16C		.	.	.	.	.	RECEPTACLE (CLC) (71286)		2	FR	
	209-63256-19		.	.	.	.	.	HINGE, BL 105 universal pylon aft lower fairing subassembly		1	FR	
	209-63256-17		.	.	.	.	.	HINGE, BL 105 universal pylon aft lower fairing subassembly		1	FR	
	209-63234-3		.	.	.	.	.	SPRING, External stores pylon (torsion)		1	FR	

EXTERNAL STORES PROVISION PACKAGES AT BL 105 - APPLICABLE TO AIRCRAFT CODED (FR)

FIGURE & INDEX NO.	PART NUMBER		1	2	3	4	5	6	7	NOMENCLATURE	UNITS PER ASSY.	USABLE ON CODE	S/C NO.
334	AN253-2-2219		.	.	.	.	.	.		PIN	1	FR	
-107	209-63246-1		.	.						FAIRING ASSEMBLY, BL 105 universal pylon aft upper LH (superseded - by 209-63246-131 for future procurement)	1	FR	
	209-63246-2		.	.						FAIRING ASSEMBLY, BL 105 universal pylon aft upper RH (superseded - by 209-63246-132 for future procurement)	1	FR	
	209-63246-131		.	.						FAIRING ASSEMBLY, BL 105 universal pylon aft upper LH (supersedes - 209-63246-1 for future procurement)	1	FR	
	209-63246-132		.	.						FAIRING ASSEMBLY, BL 105 universal pylon aft upper RH (supersedes - 209-63246-2 for future procurement)	1	FR	
-108	244-63245-1	*3	.	.	.					BRACKET ASSEMBLY, Universal pylon electrical stowage (used on - 209-63246-132 fairing assembly)	1	FR	
	244-63245-3		.	.	.	.				BRACKET SUBASSEMBLY, Universal pylon electrical stowage -	1	FR	
	MS3102A-24-28P		.	.	.	.				CONNECTOR	1	FR	
-109	244-63245-11	*3	.	.	.					BRACKET ASSEMBLY, Universal pylon electrical stowage (used on - 244-63246-132 pylon)	1	FR	
	244-63245-5		.	.	.	.				BRACKET SUBASSEMBLY, Universal pylon electrical stowage -	1	FR	
	2182-7		.	.	.	.				DUMMY RECEPTACLE (CED) (71468)	1	FR	
-110	209-63246-3		.	.	.					FAIRING, BL 105 universal pylon aft upper fairing assembly LH (outboard)	1	FR	
	209-63246-5		.	.	.					FAIRING, BL 105 universal pylon aft upper fairing assembly LH (inboard)	1	FR	
-111	R3600-NA8-0330		.	.	.					HOSE (RF) (50599)	1	FR	
	209-63246-4		.	.	.					FAIRING, BL 105 universal pylon aft upper fairing assembly RH (inboard)	1	FR	
	209-63246-6		.	.	.					FAIRING, BL 105 universal pylon aft upper fairing assembly RH (outboard)	1	FR	
-112	209-63297-1		.	.	.					SEAL, BL 105 universal pylon aft fairing wing LH	1	FR	
	209-63297-2		.	.	.					SEAL, BL 105 universal pylon aft fairing wing RH	1	FR	
-113	AN365-1032		.	.	.					NUT	2	FR	
-114	2W18-10		.	.	.					WASHER, Flat (NA) (89372)	2	FR	
-115	AN509-10R13		.	.	.					SCREW	2	FR	
-116	209-63258		.	.	.					SUPPORT, BL 105 universal pylon aft fairing (superseded by - 209-63258-3 for future procurement)	1	FR	537
	209-63258-3	*3	.	.	.					SUPPORT, BL 105 universal pylon aft fairing (supersedes - 209-63258 for future procurement)	1	FR	
-117	209-482114		.	.	.					FITTING, Air buddy tank universal pylon	1	FR	
-118	209-63246-61		.	.	.					PLATE, BL 105 universal pylon aft upper fairing assembly	1	FR	
-119	AN507-440R10		.	.	.					SCREW	7	FR	
	AN365-440		.	.	.					NUT	7	FR	
-120	209-63246-89		.	.	.					RETAINER, BL 105 universal pylon aft upper fairing (used on - 209-63246-1, 209-63246-2 and 209-63246-132 fairing assembly)	2	FR	
-121	209-63298		.	.	.					SEAL, BL 105 universal pylon aft upper fairing airline and plug (used on 209-63246-1, 209-63246-2 and 209-63246-132 fairing assembly)	1	FR	
-122	AN515-440R7		.	.	.					SCREW	8	FR	
	2W18-4		.	.	.					WASHER, Flat (NA) (89372)	8	FR	
	AN365-440		.	.	.					NUT	8	FR	
-123	209-63270	*4	.	.	.					RING, BL 105 universal pylon aft plug	1	FR	
	209-63246-123	*4	.	.	.					RING, BL 105 universal pylon aft upper (used on 209-63246-1 - fairing assembly)	1	FR	
-124	209-63269	*4	.	.	.					SEAL, BL 105 universal pylon aft plug	1	FR	
	209-63298	*4	.	.	.					SEAL, BL 105 universal pylon upper aft fairing air line and plug	1	FR	
	209-63246-41		.	.	.					FAIRING SUBASSEMBLY, BL 105 universal pylon aft upper LH	1	FR	
	209-63246-42		.	.	.					FAIRING SUBASSEMBLY, BL 105 universal pylon aft upper RH	1	FR	
-125	209-63246-143		.	.	.	.				DOOR, BL 105 universal pylon aft upper fairing subassembly LH	1	FR	
	209-63246-69		.	.	.	.				HINGE, BL 105 universal pylon aft upper fairing subassembly LH	1	FR	
-126	209-63246-79		.	.	.					HINGE, BL 105 universal pylon aft upper fairing assembly	1	FR	
-127	H-5000-063-188		.	.	.					LATCH (HWL) (83014)	2	FR	
-128	AN253-2-696		.	.	.					PIN	1	FR	
-129	209-63234-7		.	.	.					SPRING, External stores pylon (torsion)	1	FR	
	209-63246-21		.	.	.					FAIRING SUBASSEMBLY, BL 105 universal pylon aft upper LH	1	FR	
	209-63246-22		.	.	.					FAIRING SUBASSEMBLY, BL 105 universal pylon aft upper RH	1	FR	
-130	209-63246-43		.	.	.					DOOR, BL 105 universal pylon aft upper fairing subassembly LH	1	FR	
	209-63246-44		.	.	.					HINGE, BL 105 universal pylon aft upper fairing subassembly RH	1	FR	
	209-63246-42		.	.	.					HINGE, BL 105 universal pylon aft upper fairing subassembly	1	FR	
-131	209-63246-45		.	.	.					HINGE, BL 105 universal pylon aft fairing assembly LH	1	FR	
	209-63246-46		.	.	.					HINGE, BL 105 universal pylon aft upper fairing assembly RH	1	FR	
-132	H-5000-063-188		.	.	.					LATCH (HWL) (83014)	2	FR	
-133	209-63234-7		.	.	.					SPRING, External stores pylon (torsion)	2	FR	
-134	AN253-2-1643		.	.	.					PIN	1	FR	
	209-63246-11		.	.	.					FAIRING SUBASSEMBLY, BL 105 universal pylon aft upper LH	1	FR	
	209-63246-12		.	.	.					FAIRING SUBASSEMBLY, BL 105 universal pylon aft upper RH	1	FR	
-135	209-63246-17		.	.	.					DOOR, BL 105 universal pylon aft upper fairing subassembly LH	1	FR	
	209-63246-18		.	.	.					DOOR, BL 105 universal pylon aft upper fairing subassembly RH	1	FR	
	209-63246-25		.	.	.					HINGE, BL 105 universal pylon aft upper fairing subassembly	1	FR	
	209-63246-27		.	.	.					HINGE, BL 105 universal pylon aft upper fairing assembly	1	FR	
-136	AN253-2-381		.	.	.					PIN	1	FR	
-137	209-63234-7		.	.	.					SPRING, External stores pylon (torsion)	1	FR	
-138	UF5T-20		.	.	.					STUD (DZ) (72794)	2	FR	
	GH5x-.662		.	.	.					GROMMET (DZ) (72794)	2	FR	
	URF5		.	.	.					RECEPTACLE (DZ) (72794)	2	FR	
	209-63246-31		.	.	.					FAIRING SUBASSEMBLY, BL 105 universal pylon aft upper	1	FR	

EXTERNAL STORES PROVISION PACKAGES AT BL 105 - APPLICABLE TO AIRCRAFT CODED (FR)

FIGURE & INDEX NO.	PART NUMBER	1	2	3	4	5	6	7	NOMENCLATURE	UNITS PER ASSY.	USABLE ON CODE	S/C NO.
334-139	209-63246-57		.	.	.	.			DOOR, BL 105 universal pylon aft upper fairing subassembly --	1	FR	
	209-63246-55		.	.	.	.			HINGE, BL 105 universal pylon aft upper fairing subassembly --	1	FR	
	209-63246-65		.	.	.	.			HINGE, BL 105 universal pylon aft upper fairing subassembly --	1	FR	
-140	AN253-2-440		.	.	.				PIN	1	FR	
-141	40S5-4		.	.	.				STUD (CLC) (71286)	1	FR	
	40G6-1		.	.	.				GROMMET (CLC) (71286)	1	FR	
	R4G		.	.	.				RING (CLC) (71286)	1	FR	
	244-16C		.	.	.				RECEPTACLE (CLC) (71286)	1	FR	
-142	244-63235	*3	.	.					SUPPORT, Universal pylon weather seal (used on 209-63413-102 pylon) -	1	FR	
-143	209-63298		.	.					SEAL, BL 105 universal pylon upper aft fairing (used on 209-63413-102 - pylon)	2	FR	
-144	244-63227	*3	.	.					CABLE, Universal pylon rack release assembly of (used 209-63413-101 - and 209-63413-102 pylons)	1	FR	
	244-63227-3		.	.	.				CABLE, Universal pylon rack release subassembly of	1	FR	
	AN100C-4		.	.	.				THIMBLE	1	FR	
	28-2-G		.	.	.				SPLICE (NTS) (76691)	1	FR	
	RA2487-3		.	.	.				BALL (ACA) (01976)	1	FR	
-145	AN4-4A		.	.					BOLT	4	FR	
-146	2W18-416M		.	.					WASHER, Flat (NA) (89372)	4	FR	
-147	209-63264		.	.					BRACKET, BL 105 universal pylon solenoid assembly of	2	FR	
-148	AN509-8R9		.	.					SCREW	8	FR	
-149	51750		.	.					ARMING UNIT (Jervis Corp.) (79387)	2	FR	
-150	209-543112		.	.					BOX ASSEMBLY, Electrical T-249 fuse and relay pylon (LH pylon only) - (superseded by 209-543112-61 for future procurement) (see Electrical)	1	TG	537
	209-543112-61		.	.					BOX ASSEMBLY, Electrical T-249 fuse and relay pylon (supersedes ---- 209-543112 for future procurement) (209-543112 not to be used for replacement on any pylon) (see Electrical) (used on 209-63413-1 and 209-63413-71 pylon only) (superseded by 244-54066 for future procurement)	1	RJ	537
-151	244-54066		.	.					BOX, Electrical T-249 fuse relay pylon assembly of complete (used on -- the 209-63413-101 pylon only) (see Electrical and Instrument for additional breakdown) (supersedes 209-543112-61 for future procurement)	1	FR	
	ATTACHING PARTS											
	AN3-6A		.	.					BOLT	4	FR	
	2W18-10M		.	.					WASHER, Flat (NA) (89372)	4	FR	
	---*---											
-152	209-63351		.	.					BOLT, BL 105 universal pylon rack attaching	8	FR	
-153	AN365-1216		.	.					NUT	8	FR	
-154	2W17-1216		.	.					WASHER, Corrosion-resistant steel (NA) (89372)	4	FR	
-155	MS20002C12		.	.					WASHER	4	FR	
-156	MS20012H20		.	.					BOLT	4	FR	
	209-63268-1		.	.					FITTING ASSEMBLY, BL 105 universal pylon rack	1	FR	
	209-63268-11		.	.					FITTING ASSEMBLY, BL 105 universal pylon rack	1	FR	
-157	209-63268-3		.	.	.				FITTING, BL 105 universal pylon rack fitting assembly (used ------ on 209-63268-1)	1	FR	
-158	209-63268-5		.	.	.				FITTING, BL 105 universal pylon rack fitting assembly (used ------ on 209-63268-11)	1	FR	
-159	1452-098		.	.	.				NUT, Barrel (EN) (72962)	8	FR	
-160	HS98482		.	.	.				RETAINER, Barrel nut (UC) (61864)	8	FR	
-161	209-63425		.	.					HOOK, External stores pylon wiring (aft hook used on 209-63413-1, ----- 209-63413-71 and 209-63413-102 only)	2	FR	
-162	209-63425		.	.					HOOK, External stores pylon wiring (forward used on 209-63413-1, ---- 209-63413-71, 209-63413-2 and 209-63413-102 pylon assembly)	1	FR	
	ATTACHING PARTS											
	AN520-10R12		.	.					SCREW	4	FR	
	2W18-10M		.	.					WASHER, Flat (NA) (89372)	8	FR	
	AN365-1032		.	.					NUT	4	FR	
	---*---											
-163	NAS561C6-8		.	.	.				PIN	1	FR	
-164	209-63422		.	.	.				SPRING, Compression	1	FR	
-165	209-63424		.	.	.				HANDLE, External stores pylon wiring hook	1	FR	
-166	209-63423		.	.	.				PIN, External stores pylon wiring hook	1	FR	
-167	209-63426		.	.	.				HOOK, External stores	1	FR	
-168	209-63340-3		.	.					COVER, BL 105 universal pylon access door hinge	4	FR	
-169	209-63271		.	.					DOOR ASSEMBLY, BL 105 universal pylon access	4	FR	
-170	209-63271-3		.	.	.				HINGE, BL 105 universal pylon access door assembly	1	FR	
-171	209-63271-5		.	.	.				HINGE, BL 105 universal pylon access door assembly	1	FR	
-172	209-63271-7		.	.	.				DOOR, BL 105 universal pylon access door assembly	1	FR	
-173	AN253-1-150		.	.	.				PIN	1	FR	
-174	AN315C3R		.	.	.				NUT	1	FR	
-175	2W17-10M		.	.	.				WASHER, Corrosion-resistant steel (NA) (89372)	1	FR	
-176	209-63289		.	.	.				ARM, BL 105 universal pylon door latch	1	FR	
-177	209-63272		.	.	.				BLOCK, BL 105 universal pylon door	1	FR	
-178	209-63290		.	.	.				BOLT, BL 105 universal pylon door	1	FR	
-179	209-63340-7		.	.					COVER, BL 105 universal pylon access door hinge	1	FR	
-180	209-63427		.	.					DOOR ASSEMBLY, BL 105 universal pylon	1	FR	
	209-63427-11		.	.	.				DOOR SUBASSEMBLY, BL 105 universal pylon	1	FR	
-181	209-63427-3		.	.	.	.			DOOR, BL 105 universal pylon door subassembly	1	FR	
-182	209-63427-5		.	.	.	.			HINGE, BL 105 universal pylon door subassembly	1	FR	
-183	209-63272		.	.	.	.			BLOCK, BL 105 universal pylon door	1	FR	
-184	209-63427-7		.	.	.				HINGE, BL 105 universal pylon door assembly	1	FR	

EXTERNAL STORES PROVISION PACKAGES AT BL 105 - APPLICABLE TO AIRCRAFT CODED (FR)

FIGURE & INDEX NO.	PART NUMBER	1	2	3	4	5	6	7	NOMENCLATURE	UNITS PER ASSY.	USABLE ON CODE	S/C NO.
334-185	AN253-1-7625				PIN					1	FR	
-186	AN315C3R				NUT					1	FR	
-187	2W17-10M				WASHER, Corrosion-resistant steel (NA) (89372)					1	FR	
-188	209-63289				ARM, BL 105 universal pylon door latch					1	FR	
-189	209-63290				BOLT, BL 105 universal pylon door					1	FR	
-190	209-63340-5				COVER, BL 105 universal pylon access door hinge					1	FR	
-191	209-63291-1				DOOR ASSEMBLY, BL 105 universal pylon LH					1	FR	
	209-63291-2				DOOR ASSEMBLY, BL 105 universal pylon RH					1	FR	
	209-63291-11				DOOR SUBASSEMBLY, BL 105 universal pylon LH					1	FR	
	209-63291-12				DOOR SUBASSEMBLY, BL 105 universal pylon subassembly RH					1	FR	
-192	209-63291-3					DOOR, BL 105 universal pylon door subassembly LH				1	FR	
	209-63291-4					DOOR, BL 105 universal pylon door subassembly RH				1	FR	
-193	209-63291-5					HINGE, BL 105 universal pylon door subassembly LH				2	FR	
-194	209-63272					BLOCK, BL 105 universal pylon door				1	FR	
-195	AN253-1-7625				PIN					1	FR	
-196	AN315C3R				NUT					2	FR	
-197	2W17-10M				WASHER, Corrosion-resistant steel (NA) (89372)					2	FR	
-198	209-63289				ARM, BL 105 universal pylon door latch					2	FR	
-199	209-63290				BOLT, BL 105 universal pylon door					2	FR	
-200	244-63225	*3			ROD, Universal pylon stores electric plug retainer (used on 209-63413-101 only)					1	FR	
	244-63229	*3			ADAPTER ASSEMBLY, Universal pylon MK-105 (used on 209-63413-101 only)					1	FR	
-201	244-63229-3				YOKE, Adapter universal pylon MK-105					1	FR	
-202	2W17-616M				WASHER, Flat (NA) (89372)					1	FR	
-203	MS20392-6-25				PIN					1	FR	
-204	AN415-2				LOCKPIN					1	FR	
	244-63219				BRACKET ASSEMBLY, Universal pylon retainer (used on 209-63413-101 pylon)					1	FR	
-205	244-63219-11				BRACKET, Universal pylon retainer rod subassembly					1	FR	
-206	244-63221				RETAINER					1	FR	
-207	194-48732				SPRING					1	FR	
-208	NAS561C3-6				SLOTTED PIN					1	FR	
	244-63222-19	*3			BRACKET ASSEMBLY, Universal pylon retainer rod aft (used on 209-63413-101 pylon)					1	FR	
-209	244-63222-11				BRACKET, Universal pylon retainer rod aft subassembly					1	FR	
-210	244-63222-21				BRACKET, Universal pylon retainer rod aft subassembly					1	FR	
-211	7S15-10-24				SCREW					4	FR	
-212	2W18-10				WASHER (NA) (89372)					4	FR	
-213	AN365-1032				NUT					4	FR	
	209-63239-1				FRAME ASSEMBLY, BL 105 universal structure LH (superseded by 209-63239-21 for future procurement)					1	FR	
	209-63239-2				FRAME ASSEMBLY, BL 105 universal structure RH (superseded by 209-63239-22 for future procurement)					1	FR	
	209-63239-21				FRAME ASSEMBLY, BL 105 universal structure LH (supersedes 209-63239-1 for future procurement)					1	FR	
	209-63239-22				FRAME ASSEMBLY, BL 105 universal structure RH (supersedes 209-63239-2 for future procurement)					1	FR	
-214	AN509-516R20				SCREW					22	FR	
	2W18-516				WASHER, Flat (NA) (89372)					22	FR	
	AN365-524				NUT					22	FR	
-215	209-482117-1				CLIP, Fuel universal pylon assembly of (outboard)					1	FR	
-216	209-482117-2				CLIP, Fuel universal pylon assembly of (inboard)					1	FR	
	212-12					RECEPTACLE (CLC) (71286)				1	FR	
-217	209-482118				BRACKET, Fuel universal pylon fitting assembly of					1	FR	
	2600-4					STUD (CLC) (71286)				2	FR	
	209-63252-11				FITTING ASSEMBLY, BL 105 universal pylon forward LH (superseded by 209-63352-21 for future procurement)					1	FR	
	209-63252-12				FITTING ASSEMBLY, BL 105 universal pylon forward RH (superseded by 209-63352-22 for future procurement)					1	FR	
	209-63352-21				FITTING ASSEMBLY, BL 105 universal pylon forward LH (supersedes 209-63252-11 for future procurement)					1	FR	
	209-63352-22				FITTING ASSEMBLY, BL 105 universal pylon forward RH (supersedes 209-63252-12 for future procurement)					1	FR	
-218	209-63352-11					FITTING, BL 105 universal pylon forward fitting assembly LH				1	FR	
	209-63352-12					FITTING, BL 105 universal pylon forward fitting assembly RH				1	FR	
-219	209-63006					BUSHING, Inboard pylon attaching forward				1	FR	
-220	AN509-616R20				SCREW					12	FR	
	2W18-616M				WASHER, Flat (NA) (89372)					12	FR	
	AN365-624				NUT					12	FR	
	209-63253-11				FITTING ASSEMBLY, BL 105 universal pylon intermediate LH					1	FR	
	209-63253-12				FITTING ASSEMBLY, BL 105 universal pylon intermediate RH					1	FR	
-221	209-63253-3					FITTING, BL 105 universal pylon intermediate fitting assembly LH				1	FR	
	209-63253-4					FITTING, BL 105 universal pylon intermediate fitting assembly RH				1	FR	
-222	209-63004					BUSHING, Inboard pylon attaching (inboard)				1	FR	
-223	209-63353					BUSHING, Inboard pylon attaching (outboard)				1	FR	
-224	RL24SB-7				RING (ROSN) (83324)					4	FR	
-225	RD205SB-5.5L				INSERT (ROSN) (83324)					4	FR	
	209-63240-1				BEAM ASSEMBLY, BL 105 universal pylon LH					1	FR	
	209-63240-2				BEAM ASSEMBLY, BL 105 universal pylon RH					1	FR	
-226	209-63240-3					BEAM, BL 105 universal pylon beam assembly LH				1	FR	
	209-63240-4					BEAM, BL 105 universal pylon beam assembly RH				1	FR	

EXTERNAL STORES PROVISION PACKAGES AT BL 105 - APPLICABLE TO AIRCRAFT CODED (FR)

FIGURE & INDEX NO.	PART NUMBER	1	2	3	4	5	6	7	NOMENCLATURE	UNITS PER ASSY.	USABLE ON CODE	S/C NO.
334-227	RD208SB-9	.	.	.	.				INSERT (ROSN) (83324)	2	FR	
	RL38SB-9	.	.	.	.				RING (ROSN) (83324)	2	FR	
-228	244-54050	*3	.	.					NAMEPLATE, Electric T-249 relay bar schematic (used on 209-63413-101 pylon)	1	FR	
-229	209-63227		.	.					ADAPTER, MK-25 primer (used on 209-63202-21 only)	1	FR	482
-230	No Number		.						RACK (Aero 7A) (DG) (18355)	1	FR	

NOTE: *1 Package 209-63202-21 reidentified as 209-63202-121 when Service Change No. 482 is incorporated
*2 Package 209-63202-121, reidentified as 209-63202-221 when Service Change No. 537 is incorporated
*3 Parts added when Service Change No. 537 is incorporated
*4 209-63298 together with 209-63246-123 supersedes 209-63269 and 209-63270 for future procurement

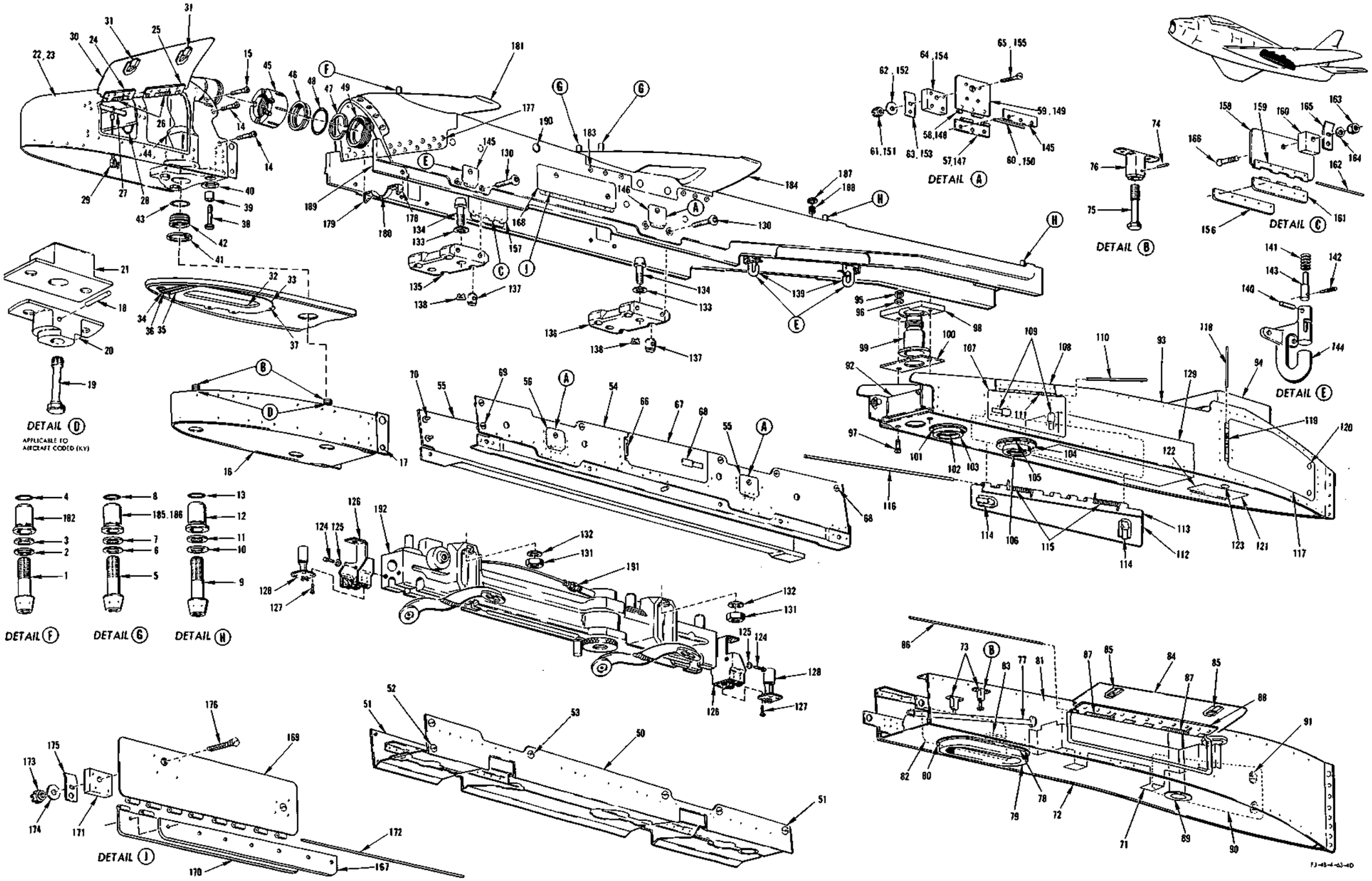

FIGURE 334 - EXTERNAL STORES UNIVERSAL PYLON AT BL 105 LH - APPLICABLE TO AIRCRAFT CODED (FR)

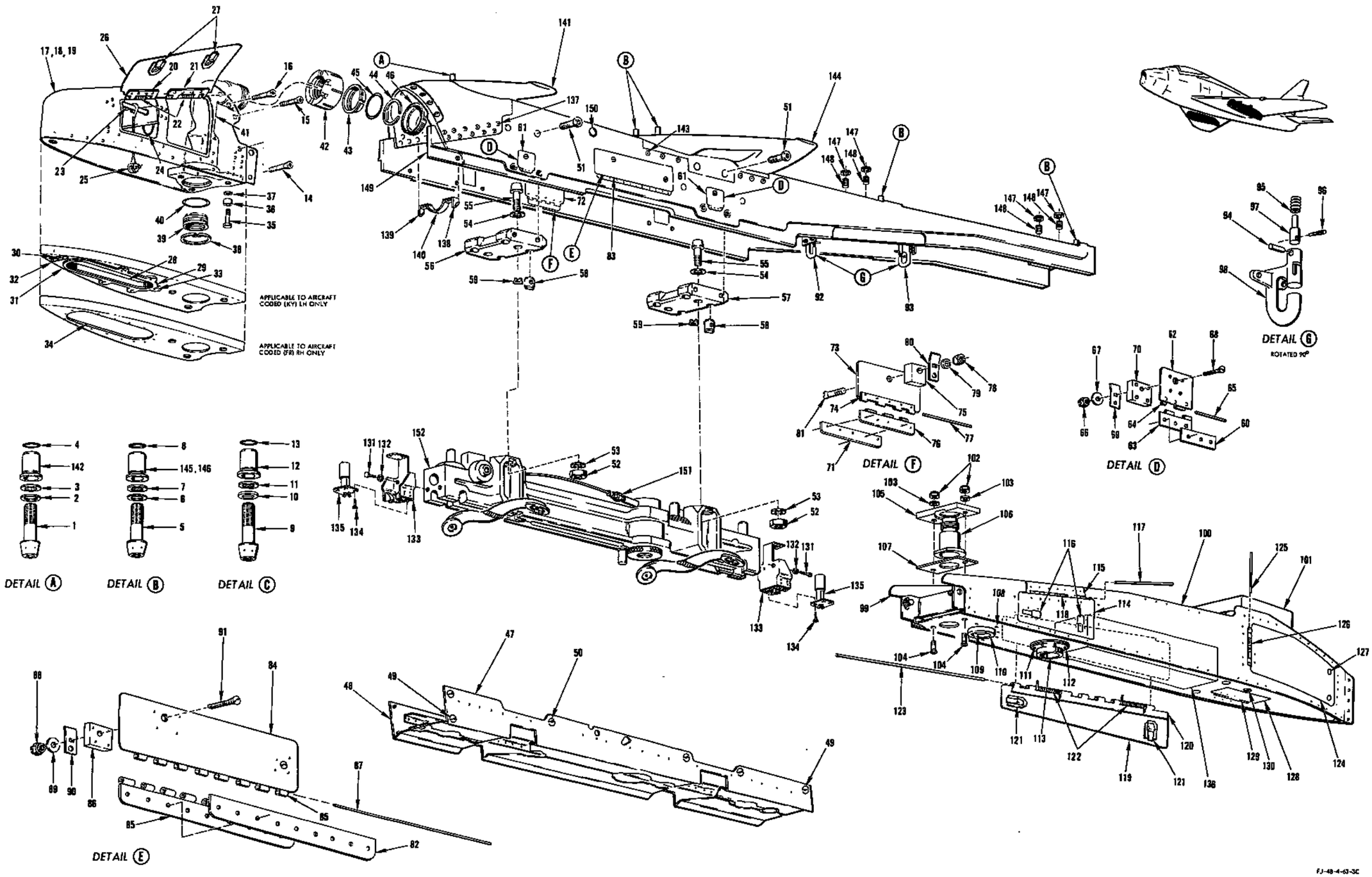

FIGURE 335 - EXTERNAL STORES UNIVERSAL PYLON AT BL 105 LH AND RH - APPLICABLE TO AIRCRAFT CODED (FR)

EXTERNAL STORES UNIVERSAL PYLON AT BL 105 LH AND RH - APPLICABLE TO AIRCRAFT CODED (FR)

FIGURE & INDEX NO.	PART NUMBER	1 2 3 4 5 6 7 NOMENCLATURE	UNITS PER ASSY.	USABLE ON CODE	S/C NO.
335	209-63202-21	PACKAGE, Provision for external stores	1	KY	
	209-63202-121	PACKAGE, Provision for external stores	1	KX	
	209-63413-1	. PYLON ASSEMBLY, BL 105 universal LH	1	KX	
	209-63413-71	. PYLON ASSEMBLY, BL 105 universal LH	1	KY	
	209-63413-2	. PYLON ASSEMBLY, BL 105 universal RH	1	FR	
	ATTACHING PARTS				
-1	MS20010H20	. BOLT	1	FR	
-2	MS20002C10	. WASHER	1	FR	
-3	600-001-5/8	. STAT-O-SEAL (WFRC) (83259)	1	FR	
-4	AN6227B13	. PACKING	1	FR	
-5	MS20009H20	. BOLT	2	FR	
-6	MS20002C9	. WASHER	2	FR	
-7	600-001-9/16	. STAT-O-SEAL (WFRC) (83259)	2	FR	
-8	AN6227B12	. PACKING	2	FR	
-9	MS20009H20	. BOLT	2	FR	
-10	MS20002C9	. WASHER	2	FR	
-11	600-001-9/16	. STAT-O-SEAL (WFRC) (83259)	2	FR	
-12	209-63004	. BUSHING, Inboard pylon attaching	2	FR	
-13	AN6227B12	. PACKING	2	FR	
	---*---				
-14	AN509-10R14	. . SCREW	2	FR	
	2W18-10	. . WASHER, Flat (NA) (89372)	2	FR	
	AN365-1032	. . NUT	2	FR	
-15	AN509-10R11	. . SCREW	6	FR	
-16	AN509-10R14	. . SCREW	2	FR	
	2W18-10	. . WASHER, Flat (NA) (89372)	8	FR	
	AN365-1032	. . NUT	8	FR	
-17	209-63241-1	. . FAIRING ASSEMBLY, BL 105 universal pylon forward upper LH	1	KX	
-18	209-63241-11	. . FAIRING ASSEMBLY, BL 105 universal pylon forward upper LH	1	KY	
-19	209-63241-2	. . FAIRING ASSEMBLY, BL 105 universal pylon forward upper RH	1	FR	
-20	209-63241-29	. . . HINGE, BL 105 universal pylon forward upper fairing assembly	1	FR	
	209-63241-43	. . . HINGE, BL 105 universal pylon forward upper fairing assembly	1	FR	
-21	209-63241-35	. . . HINGE, BL 105 universal pylon forward upper fairing assembly	1	FR	
	209-63241-45	. . . HINGE, BL 105 universal pylon forward upper fairing assembly	1	FR	
-22	209-63243-7	. . . SPRING, External stores pylon (torsion)	2	FR	
	AN253-2-178	. . . PIN	1	FR	
	AN253-2-287	. . . PIN	1	FR	
-23	BL-HG-6-5.125	. . . PIN (D. W. Price Corp) (97978) (LH only)	1	FR	
-24	9C1-2-7	. . . CHAIN, Safety (NA) (89372) (LH only)	1	FR	
	5R10	. . . RING, Chain retainer (NA) (89372) (LH only)	1	FR	
-25	244-63210	. . . CABLE, Store arming pull-out BL 105 universal pylon forward assembly of	1	KY	
	244-63210-3	. . . . CABLE SUBASSEMBLY, Store arming pull-out BL 105 universal pylon forward	1	KY	
	AN100C5	. . . . THIMBLE	1	KY	
	28-3-M	. . . . SPLICE (NTS) (76691)	1	KY	
	AN867-4	. . . . TERMINAL	1	KY	
	AN416-2	. . . . PIN	1	KY	
	AN393-13	. . . . PIN	1	KY	
	209-63241-21	. . . FAIRING SUBASSEMBLY, BL 105 universal pylon forward upper LH	1	FR	
	209-63241-22	. . . FAIRING SUBASSEMBLY, BL 105 universal pylon forward upper RH	1	FR	
-26	209-63241-7	. . . . DOOR, BL 105 universal pylon forward upper fairing assembly - LH	1	FR	
	209-63241-8	. . . . DOOR, BL 105 universal pylon forward upper fairing assembly - RH	1	FR	
-27	H-5000-064-142	. . . . LATCH (HWL) (83014)	2	FR	
-28	209-63356	. . . SEAL, BL 105 universal pylon forward electrical plug assembly of	1	KY	
-29	209-63357	. . . RETAINER ASSEMBLY, BL 105 universal pylon forward electrical plug	1	KY	
-30	209-63357-5	. . . . HINGE, BL 105 universal pylon forward electrical plug retainer assembly	1	KY	
-31	209-63357-7	. . . . HINGE, BL 105 universal pylon forward electrical plug retainer assembly	1	KY	
-32	AN253-2-325	. . . . PIN	1	KY	
-33	98293-2-.220	. . . . STUD (UC) (61864)	5	KY	
	99785-2	. . . . PIN (UC) (61864)	5	KY	
	99871-P-.098	. . . RECEPTACLE (UC) (61864)	5	KY	
-34	209-63241-41	. . . PLATE, BL 105 universal pylon forward upper fairing assembly	1	FR	
-35	AN4-7A	. . BOLT	3	FR	
-36	NAS43-4-12	. . SPACER	3	FR	
-37	2W1-16-22-63	. . WASHER, Plain (NA) (89372)	3	FR	
-38	NAS50-300	. . RING	1	FR	
-39	7800	. . VALVE, Fuel check pylon fitting (Benton Corp.) (98656)	1	FR	
-40	MS29513-232	. . PACKING	1	FR	
-41	209-482112	. . FITTING, Fuel buddy tank universal pylon assembly of	1	FR	
	3651-32D	. . COUPLING, Flexible half (WIG) (79326)	1	FR	
-42	3601-3	. . . NUT (WIG) (79326)	1	FR	
-43	3601-15	. . . GLAND (WIG) (79326)	1	FR	
-44	3601-9	. . . WASHER (WIG) (79326)	1	FR	
-45	MS29513-329	. . PACKING	1	FR	
-46	209-482113-1	. . FITTING, Fuel buddy tank universal pylon wing LH	1	FR	
	209-482113-2	. . FITTING, Fuel buddy tank universal pylon wing RH	1	FR	

EXTERNAL STORES UNIVERSAL PYLON AT BL 105 LH AND RH - APPLICABLE TO AIRCRAFT CODED (FR)

FIGURE & INDEX NO.	PART NUMBER	1	2	3	4	5	6	7	NOMENCLATURE	UNITS PER ASSY.	USABLE ON CODE	S/C NO.
335	209-63247-1	.	.						FAIRING ASSEMBLY, BL 105 universal pylon center upper LH	1	FR	
	209-63247-2	.	.						FAIRING ASSEMBLY, BL 105 universal pylon center upper RH	1	FR	
-47	209-63247-3	.	.	.					FAIRING, BL 105 universal pylon center upper fairing assembly (outboard)	1	FR	
-48	209-63247-4	.	.	.					FAIRING, BL 105 universal pylon center upper fairing assembly (inboard)	1	FR	
-49	UF5T20	.	.	.					STUD (DZ) (72794)	4	FR	
	GH5	.	.	.					GROMMET (DZ) (72794)	4	FR	
-50	UF5T50	.	.	.					STUD (DZ) (72794)	8	FR	
	GH5	.	.	.					GROMMET (DZ) (72794)	8	FR	
-51	209-63351	.	.						BOLT, BL 105 universal pylon rack attaching	8	FR	
-52	AN365-1216	.	.						NUT	4	FR	
-53	2W17-1216	.	.						WASHER, Corrosion-resistant steel (NA) (89372)	4	FR	
-54	MS20002C12	.	.						WASHER	4	FR	
-55	MS20012H20	.	.						BOLT	4	FR	
	209-63268-1	.	.						FITTING ASSEMBLY, BL 105 universal pylon rack	1	FR	
	209-63268-11	.	.						FITTING ASSEMBLY, BL 105 universal pylon rack	1	FR	
-56	209-63268-3	.	.	.					FITTING, BL 105 universal pylon rack fitting assembly (used on 209-63268-1 only)	1	FR	
-57	209-63268-5	.	.	.					FITTING, BL 105 universal pylon rack fitting assembly (used on 209-63268-11 only)	1	FR	
-58	1452-098	.	.	.					NUT, Barrel (EN) (72962)	8	FR	
-59	HS98482	.	.	.					RETAINER, Barrel nut (UC) (61864)	8	FR	
-60	209-63340-3	.	.						COVER, BL 105 universal pylon access door hinge	4	FR	
-61	209-63271	.	.						DOOR ASSEMBLY, BL 105 universal pylon access	4	FR	
-62	209-63271-7	.	.	.					DOOR, BL 105 universal pylon access door assembly	1	FR	
-63	209-63271-3	.	.	.					HINGE, BL 105 universal pylon access door assembly	1	FR	
-64	209-63271-5	.	.	.					HINGE, BL 105 universal pylon access door assembly	1	FR	
-65	AN253-1-150	.	.	.					PIN	1	FR	
-66	AN315C3R	.	.	.					NUT	1	FR	
-67	2W17-10M	.	.	.					WASHER, Corrosion-resistant steel (NA) (89372)	1	FR	
-68	209-63290	.	.	.					BOLT, BL 105 universal pylon door	1	FR	
-69	209-63289	.	.	.					ARM, BL 105 universal pylon door latch	1	FR	
-70	209-63272	.	.	.					BLOCK, BL 105 universal pylon door	1	FR	
-71	209-63340-7	.	.						COVER, BL 105 universal pylon access door hinge	1	FR	
-72	209-63427	.	.						DOOR ASSEMBLY, BL 105 universal pylon	1	FR	
	209-63427-11	.	.	.					DOOR SUBASSEMBLY, BL 105 universal pylon	1	FR	
-73	209-63427-3	.	.	.	.				DOOR, BL 105 universal pylon door subassembly	1	FR	
-74	209-63427-5	.	.	.	.				HINGE, BL 105 universal pylon door subassembly	1	FR	
-75	209-63272	.	.	.	.				BLOCK, BL 105 universal pylon door	1	FR	
-76	209-63427-7	.	.	.					HINGE, BL 105 universal pylon door assembly	1	FR	
-77	AN253-1-7625	.	.	.					PIN	1	FR	
-78	AN315C3R	.	.	.					NUT	1	FR	
-79	2W17-10M	.	.	.					WASHER, Corrosion-resistant steel (NA) (89372)	1	FR	
-80	209-63289	.	.	.					ARM, BL 105 universal pylon door latch	1	FR	
-81	209-63290	.	.	.					BOLT, BL 105 universal pylon door	1	FR	
-82	209-63340-5	.	.						COVER, BL 105 universal pylon access door hinge	1	FR	
-83	209-63291-1	.	.						DOOR ASSEMBLY, BL 105 universal pylon LH	1	FR	
	209-63291-2	.	.						DOOR ASSEMBLY, BL 105 universal pylon RH	1	FR	
	209-63291-11	.	.	.					DOOR SUBASSEMBLY, BL 105 universal pylon LH	1	FR	
	209-63291-12	.	.	.					DOOR SUBASSEMBLY, BL 105 universal pylon RH	1	FR	
-84	209-63291-3	.	.	.	.				DOOR, BL 105 universal pylon door subassembly LH	1	FR	
	209-63291-4	.	.	.	.				DOOR, BL 105 universal pylon door subassembly RH	1	FR	
-85	209-63291-5	.	.	.	.				HINGE, BL 105 universal pylon door subassembly	2	FR	
-86	209-63272	.	.	.	.				BLOCK, BL 105 universal pylon door	2	FR	
-87	AN253-1-7625	.	.	.					PIN	1	FR	
-88	AN315C3R	.	.	.					NUT	2	FR	
-89	2W17-10M	.	.	.					WASHER, Corrosion-resistant steel (NA) (89372)	2	FR	
-90	209-63289	.	.	.					ARM, BL 105 universal pylon door latch	2	FR	
-91	209-63290	.	.	.					BOLT, BL 105 universal pylon door	2	FR	
-92	209-63425	.	.						HOOK ASSEMBLY, External stores pylon wiring (forward hook) (used on 209-63413-1 and 209-63413-2)	1	FR	
-93	209-63425	.	.						HOOK ASSEMBLY, External stores pylon wiring (aft hook) (used on 209-63413-1 only)	1	FR	
	ATTACHING PARTS											
	AN520-10R12	.	.						SCREW (LH only)	4	FR	
	2W18-10M	.	.						WASHER, Flat (NA) (89372) (LH only)	8	FR	
	AN365-1032	.	.						NUT (LH only)	4	FR	
	AN520-10R12	.	.						SCREW (RH only)	2	FR	
	2W18-10M	.	.						WASHER, Flat (NA) (89372) (RH only)	4	FR	
	AN365-1032	.	.						NUT (RH only)	2	FR	
	---*---											
-94	NAS561C6-8	.	.	.					PIN	1	FR	
-95	209-63422	.	.	.					SPRING, Compression	1	FR	
-96	209-63424	.	.	.					HANDLE, External stores pylon wiring hook	1	FR	
-97	209-63423	.	.	.					PIN, External stores pylon wiring hook	1	FR	
-98	209-63426	.	.	.					HOOK, External stores pylon wiring	1	FR	
-99	209-63246-1	.	.						FAIRING ASSEMBLY, BL 105 universal pylon aft upper LH	1	FR	
	209-63246-2	.	.						FAIRING ASSEMBLY, BL 105 universal pylon aft upper RH	1	FR	
-100	209-63246-3	.	.	.					FAIRING, BL 105 universal pylon aft upper fairing assembly LH (outboard)	1	FR	
	209-63246-5	.	.	.					FAIRING, BL 105 universal pylon aft upper fairing assembly LH (inboard)	1	FR	

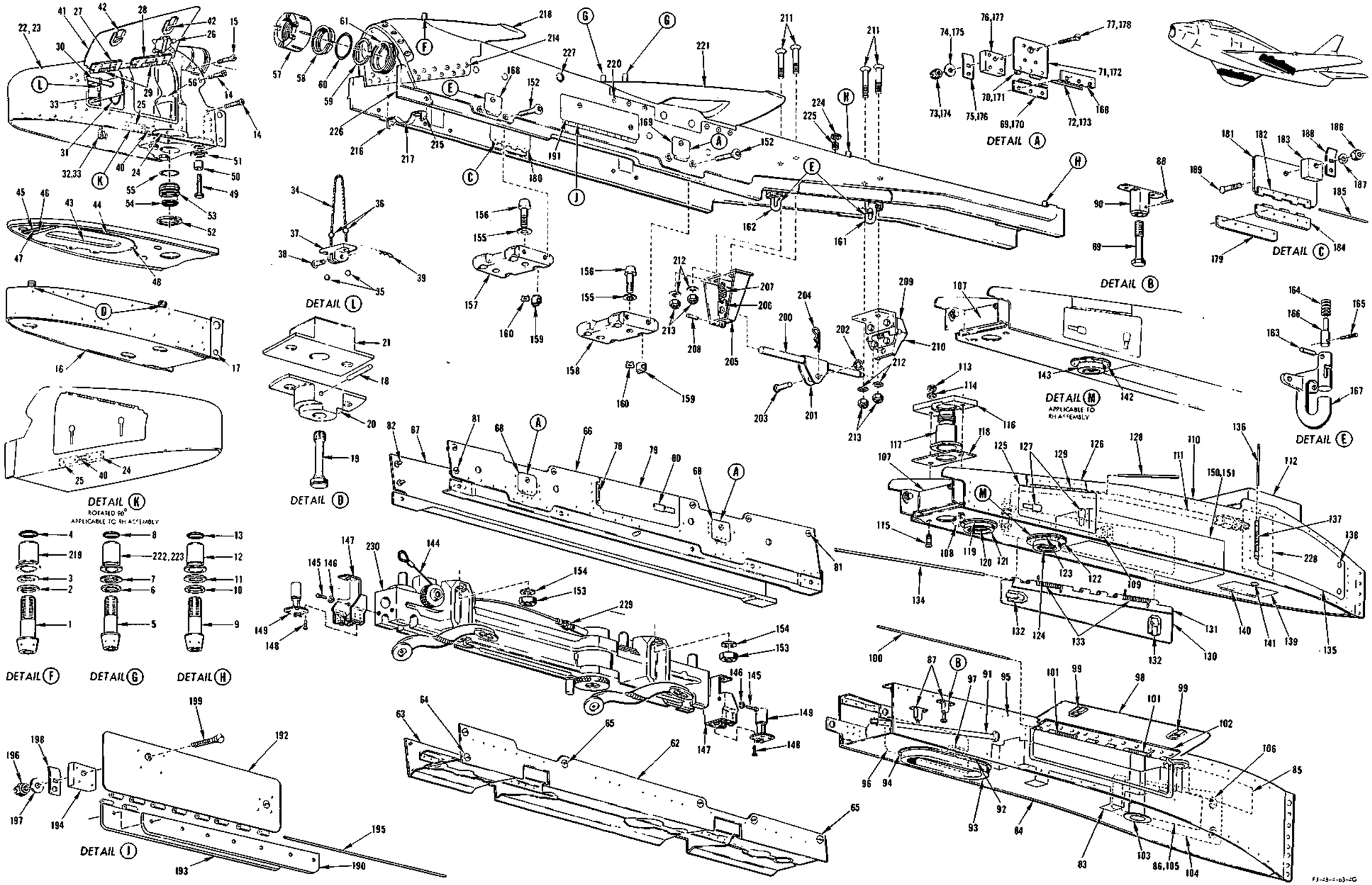

FIGURE 334 - EXTERNAL STORES PROVISION PACKAGES AT BL 105 - APPLICABLE TO AIRCRAFT CODED (FR)

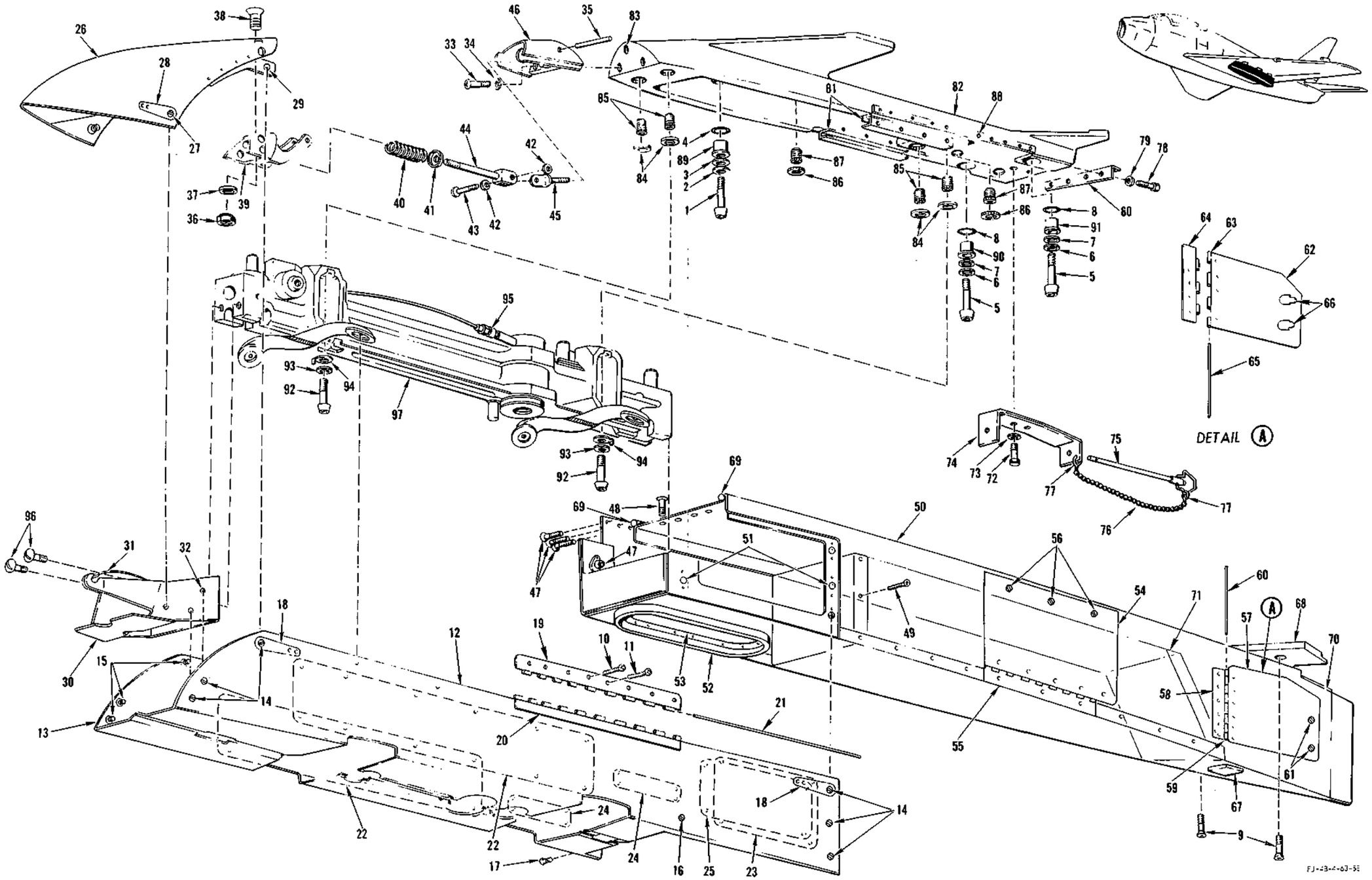

FIGURE 335 - EXTERNAL STORES MK-7 PYLON PACKAGE AND RACK AT BL 105 LH - APPLICABLE TO AIRCRAFT CODED (FR)

EXTERNAL STORES MK-7 PYLON PACKAGE AND RACK AT BL 105 LH - APPLICABLE TO AIRCRAFT CODED (FR)

FIGURE & INDEX NO.	PART NUMBER		1 2 3 4 5 6 7 NOMENCLATURE	UNITS PER ASSY.	USABLE ON CODE	S/C NO.
335	209-63202-31	*1	PACKAGE, Provisions for external stores (see Electrical and Instrument for additional breakdown)	1	FR	537
	209-63202-131		PACKAGE, Provisions for external stores (see Electrical and Instrument for additional breakdown)	1	FR	
	209-63313	*2	. PYLON ASSEMBLY, BL 105 MK-7 (superseded by 209-63313-31 for future procurement)	1	FR	537
	209-63313-31		. PYLON ASSEMBLY, BL 105 MK-7 (supersedes 209-63313 for future procurement)	1	FR	
	ATTACHING PARTS					
-1	MS20010H20		. BOLT	1	FR	
-2	MS20002C10		. WASHER	1	FR	
-3	600-001-5/8		. STAT-O-SEAL (WFRC) (83259)	1	FR	
-4	AN6227B13		. PACKING	1	FR	
-5	MS20009H20		. BOLT	2	FR	
-6	MS20002C9		. WASHER	2	FR	
-7	600-001-9/16		. STAT-O-SEAL (WFRC) (83259)	2	FR	
-8	AN6227B12		. PACKING	2	FR	
-9	AN509-10R12		. SCREW	2	FR	
	---*---					
-10	AN509-10-15		. . SCREW	10	FR	
-11	AN509-10-11		. . SCREW	8	FR	
	209-63316-1	*3	. . DOOR ASSEMBLY, BL 105 MK-7 pylon (outboard) (superseded by 209-63316-21 for future procurement)	1	FR	
	209-63316-2	*3	. . DOOR ASSEMBLY, BL 105 MK-7 pylon (inboard) (superseded by 209-63316-22 for future procurement)	1	FR	
-12	209-63316-21	*3	. . DOOR ASSEMBLY, BL 105 MK-7 pylon (outboard) (supersedes 209-63316-1 for future procurement)	1	FR	
-13	209-63316-22	*3	. . DOOR ASSEMBLY, BL 105 MK-7 pylon (inboard) (supersedes 209-63316-2 for future procurement)	1	FR	
-14	UF5T20		. . . STUD (DZ) (72794) (used on 209-63316-21 only)	6	FR	
	GH5x-.662		. . . GROMMET (DZ) (72794) (used on 209-63316-21 only)	6	FR	
-15	UF5T20		. . . STUD (DZ) (72794) (used on 209-63316-22 only)	3	FR	
	GH5x-.662		. . . GROMMET (DZ) (72794) (used on 209-63316-22 only)	3	FR	
-16	UF5T30		. . . STUD (DZ) (72794) (used on 209-63316-21 only)	1	FR	
	GH5x-.662		. . . GROMMET (DZ) (72794) (used on 209-63316-21 only)	1	FR	
-17	UF5T30		. . . STUD (DZ) (72794) (used on 209-63316-22 only)	2	FR	
	GH5x-.662		. . . GROMMET (DZ) (72794) (used on 209-63316-22 only)	3	FR	
-18	209-63316-5		. . . EJECTOR SPRING, BL 105 MK-7 pylon door assembly (used on 209-63316-21 only)	2	FR	
	209-63316-5		. . . EJECTOR SPRING, BL 105 MK-7 pylon door assembly (used on 209-63316-22 only)	1	FR	
-19	209-63316-23		. . . HINGE, BL 105 MK-7 pylon door assembly	1	FR	
-20	209-63316-25		. . . HINGE, BL 105 MK-7 pylon door assembly	1	FR	
-21	AN253-2-1450		. . . PIN	1	FR	
-22	209-63345		. . PLATE, Aero 7A rack operation instruction (superseded by 209-63345-5 for future procurement)	1	FR	482
	209-63345-5		. . PLATE, Aero 7A rack operation instruction (supersedes 209-63345 for future procurement)	1	FR	
-23	209-54040		. . NAMEPLATE, Electrical MK-7 pylon schematic (supersedes 209-540148-3 for future procurement)	1	FR	
-24	209-63347		. . NAMEPLATE, Aero 7A rack instruction	2	FR	
-25	209-63338		. . NAMEPLATE, BL 105 MK-7 pylon plug	1	FR	
-26	209-63314		. . FAIRING ASSEMBLY, BL 105 MK-7 forward	1	FR	
-27	UF5T20		. . . STUD (DZ) (72794)	2	FR	
	GH5x-.662		. . . GROMMET (DZ) (72794)	2	FR	
-28	209-63314-9		. . . EJECTOR SPRING, BL 105 MK-7 forward fairing assembly	2	FR	
-29	URF5		. . . RECEPTACLE (DZ) (72794)	2	FR	
	URF5-3		. . . SPACER (DZ) (72794)	4	FR	
-30	209-63328		. . HOOK ASSEMBLY, BL 105 MK-7 pylon nose fairing	1	FR	
-31	209-63328-13		. . . SPRING, BL 105 MK-7 pylon nose fairing hook assembly	1	FR	
-32	URF5		. . . RECEPTACLE (DZ) (72794)	6	FR	
	URF5-3		. . . SPACER (DZ) (72794)	12	FR	
	2W18-8M		. . . WASHER, Flat (NA) (89372)	12	FR	
-33	NAS222-11		. . SCREW	3	FR	
-34	2W18-416M		. . WASHER, Flat (NA) (89372)	3	FR	
-35	2P9-11-49		. . PIN, Press-fit (NA) (89372)	1	FR	
-36	AN365-832		. . NUT	5	FR	
-37	2W18-8		. . WASHER, Flat (NA) (89372)	5	FR	
-38	7S15-8R8		. . SCREW, 100° flush head (NA) (89372)	5	FR	
-39	209-63318		. . HINGE, BL 105 MK-7 pylon forward fairing	1	FR	
-40	209-63319		. . SPRING, Compression	1	FR	
-41	209-63324		. . RETAINER, BL 105 MK-7 pylon spring	1	FR	
-42	2W18-10M		. . WASHER, Flat (NA) (89372)	2	FR	
-43	AN393-13		. . PIN	1	FR	
-44	209-63321		. . ROD, BL 105 MK-7 pylon spring guide	1	FR	
-45	AN42B-C4A		. . BOLT	1	FR	
-46	209-63320		. . BRACKET, BL 105 MK-7 pylon fairing support	1	FR	
-47	7S15-10-8		. . SCREW, 100° flush head (NA) (89372)	3	FR	
-48	AN509-10-9		. . SCREW	4	FR	
-49	AN509-10-8		. . SCREW	28	FR	
	209-63315		. . FAIRING ASSEMBLY, BL 105 MK-7 pylon aft	1	FR	
-50	209-63315-81		. . FAIRING ASSEMBLY, BL 105 MK-7 pylon (supersedes 209-63315 for future procurement)	1	FR	

EXTERNAL STORES MK-7 PYLON PACKAGE AND RACK AT BL 105 LH - APPLICABLE TO AIRCRAFT CODED (FR)

FIGURE & INDEX NO.	PART NUMBER	1	2	3	4	5	6	7	NOMENCLATURE	UNITS PER ASSY.	USABLE ON CODE	S/C NO.
335-51	URF5								RECEPTACLE (DZ) (72794)	6	FR	
	URF5-3								SPACER (DZ) (72794)	12	FR	
-52	209-63335								SEAL, BL 105 MK-7 pylon electrical	1	FR	
-53	209-63336								RETAINER, BL 105 MK-7 pylon electrical seal	1	FR	
	ATTACHING PARTS											
	AN515-4R8								SCREW	8	FR	
	AN365-440								NUT	8	FR	
-54	209-63315-23								DOOR, BL 105 MK-7 pylon aft fairing assembly	1	FR	
-55	209-63315-39								HINGE, BL 105 MK-7 pylon aft fairing assembly	1	FR	
	209-63315-41								HINGE, BL 105 MK-7 pylon aft fairing assembly	1	FR	
	AN253-2-975								PIN	1	FR	
-56	UF5T20								STUD (DZ) (72794)	3	FR	
	GH5x-.662								GROMMET (DZ) (72794)	3	FR	
	URF5								RECEPTACLE (DZ) (72794)	3	FR	
-57	209-63315-73								DOOR, BL 105 MK-7 pylon aft fairing assy (used on 209-63315 only)	1	FR	
-58	209-63315-43								HINGE, BL 105 MK-7 pylon aft fairing assy (used on 209-63315 only)	1	FR	
-59	209-63315-45								HINGE, BL 105 MK-7 pylon aft fairing assy (used on 209-63315 only)	1	FR	
-60	AN253-2-550								PIN (used on 209-63315 only)	1	FR	
-61	UF5T20								STUD (DZ) (72794) (used on 209-63315 only)	2	FR	
	GH5x-.662								GROMMET (DZ) (72794) (used on 209-63315 only)	2	FR	
	URF5								RECEPTACLE (DZ) (72794) (used on 209-63315 only)	2	FR	
-62	209-63315-85								DOOR, BL 105 MK-7 pylon aft fairing assembly LH (used on 209-63315-81 only)	1	FR	
	209-63315-86								DOOR, BL 105 MK-7 pylon aft fairing assembly RH (used on 209-63315-81 only)	1	FR	
-63	209-63315-87								HINGE, BL 105 MK-7 pylon aft fairing assy (used on 209-63315-81 only)	2	FR	
-64	209-63315-89								HINGE, BL 105 MK-7 pylon aft fairing assy (used on 209-63315-81 only)	2	FR	
-65	209-63315-93								PIN (used on 209-63315-81 only)	2	FR	
-66	H5000-.081-.164								LATCH (HWL) (83014) (used on 209-63315-81 only)	4	FR	
-67	2182-7								RECEPTACLE (CED) (71468)	1	FR	
-68	209-63149-7								FAIRING SUPPORT (left hand side)	1	FR	
	209-63149-9								FAIRING SUPPORT (right hand side)	1	FR	
	209-63315-65								SEAL, BL 105 MK-7 pylon aft fairing assembly (make from A1-4454-1 x 1-1/4 (CHR) (71643)	1	FR	
-69	209-63315-49								SEAL, BL 105 MK-7 pylon assembly (make from A1-4454-1 x 42-3/4 (CHR) (71643)	2	FR	
-70	209-63315-47								SEAL, BL 105 MK-7 pylon assembly	1	FR	
-71	209-540140-21	*4							ELECTRICAL EQUIPMENT ASSEMBLY, MK-7 pylon (supersedes 209-540140 for future procurement) (see Electrical and Instrument) (superseded by 244-54068 for future procurement)	1	FR	537
	244-54068								ELECTRICAL EQUIPMENT, MK-7 pylon assembly of (supersedes 209-540140-21 for future procurement) (see Electrical and Instrument for additional breakdown)	1	FR	
-72	AN3H4A								BOLT	2	FR	
-73	2W18-10M								WASHER, Flat (NA) (89372)	2	FR	
-74	209-63326								SUPPORT ASSEMBLY, BL 105 MK-7 pylon wire	1	FR	
-75	BL-4-5.160								BALL-LOK PIN (D. W. Price Corp) (97978)	1	FR	
-76	9C1-2-8								CHAIN, Safety (NA) (89372)	1	FR	
-77	5R10								RING, Chain retainer (NA) (89372)	2	FR	
-78	AN3H4A								BOLT	4	FR	
-79	2W18-10M								WASHER, Flat (NA) (89372)	4	FR	
-80	209-63327								ANGLE, BL 105 MK-7 pylon attaching	1	FR	
-81	209-63339								CHANNEL ASSEMBLY, BL 105 MK-7 pylon	2	FR	
	209-63217-11	*3							ADAPTER ASSEMBLY, BL 105 MK-7 pylon (superseded by 209-63217-21 for future procurement)	1	FR	
	209-63317-21	*3							ADAPTER ASSEMBLY, BL 105 MK-7 pylon (supersedes 209-63217-11 for future procurement)	1	FR	
	209-63317-3	*3							ADAPTER, BL 105 MK-7 pylon adapter assembly	1	FR	
-82	209-63317-5	*3							ADAPTER, BL 105 MK-7 pylon adapter assembly	1	FR	
-83	RD206SB-6.5L								INSERT (ROSN) (83324)	3	FR	
	RL28SB-8								RING (ROSN) (83324)	3	FR	
-84	4B19S12-006								BUSHING, Press-fit plain (NA) (89372)	4	FR	
-85	1191-12CNx-3/4								INSERT, Heli-coil (AF) (91767)	4	FR	
-86	RD205SB-5.5L								INSERT (ROSN) (83324)	3	FR	
-87	RL24SB7								RING (ROSN) (83324)	3	FR	
-88	RD205SB-5.5L								INSERT (ROSN) (83324)	10	FR	
	RL24SB7								RING (ROSN) (83324)	10	FR	
-89	209-63006								BUSHING, Inboard pylon attaching forward	1	FR	
-90	209-63004								BUSHING, Inboard pylon attaching	1	FR	
-91	209-63353								BUSHING, Universal pylon attaching	1	FR	
-92	MS20012H12								BOLT	4	FR	
-93	MS20002C12								WASHER	4	FR	
-94	209-63232								WASHER, External stores pylon	4	FR	
-95	209-63227								ADAPTER, MK-25 primer	1	FR	
-96	AN24-8								BOLT	2	FR	
-97	No Number								RACK (Aero 7A) (DG) (18355)	1	FR	

NOTE: *1 Package 209-63202-31 reidentified as 209-63202-131 when Service Change No. 537 is incorporated
*2 Pylon 209-63313 reidentified as 209-63313-31 Service Change No. 537 is incorporated. Applicable to pylons having Serial No.(s) H-001 through H-222
*3 209-63316-21 and 209-63316-22 together with 209-63317-21 supersede 209-63316-1 and 209-63316-2 together with 209-63317-11 for future procurement
*4 Electrical equipment assembly 209-540140-21 reidentified as 244-54068 when Service Change No. 537 is incorporated

EXTERNAL STORES PROVISION PACKAGES - APPLICABLE TO SIDEWINDER CONFIGURATION

FIGURE & INDEX NO.	PART NUMBER	1 2 3 4 5 6 7 NOMENCLATURE	UNITS PER ASSY.	USABLE ON CODE	S/C NO.
336	209-89855	PACKAGE, Provisions for external stores	1	ET	
	209-63202-61	PACKAGE, Provisions for external stores	1	FR	
-1	No Number	. SIDEWINDER LAUNCHER (Aero 3A) (GFP) (used at BL153, BL105 and BL48-	6	ET	
		. SIDEWINDER LAUNCHER (Aero 3A) (GFP) (used at BL153 and BL105)	4	FR	
-2	No Number	. PYLON (Aero 3A) (GFP) (used at BL153 and BL105)	4	ET	
		. PYLON (Aero 3A) (GFP) (used at BL153, BL105 and BL48)	6	FR	
-3	209-68012-1	. FAIRING, BL153 pylon adapter assembly of LH	1		
	209-68012-2	. FAIRING, BL153 pylon adapter assembly of RH	1		
	ATTACHING PARTS				
-4	SP1561-1032-8	. SCREW (SH) (78189)	3		
-5	AN509-1032-R8	. SCREW	3		
	---*---				
-6	209-68012-23	. . SEAL, BL153 pylon adapter fairing assembly	1		
-7	209-68011-1	. FAIRING, BL105 pylon adapter assembly of LH	1		
	209-68011-2	. FAIRING, BL105 pylon adapter assembly of RH	1		
	ATTACHING PARTS				
-8	AN509-10R8	. SCREW	3		
	---*---				
-9	209-68016	. BOLT, BL48 pylon attaching	2	FR	
-10	209-68017	. WASHER, BL48 pylon attaching	2	FR	
-11	209-68021	. SEAL, Missile pylon assembly of (superseded by 209-68021-11 for future procurement)	1		
	209-68021-11	. SEAL, Missile pylon assembly of (supersedes 209-68021 for future procurement)	1		
	209-68010	. BEAM ASSEMBLY, BL48 adapter	1	FR	
-12	209-68014-11	. . BEAM ASSEMBLY, BL48 adapter	1	FR	
-13	1185-24CNx7/8	. . . INSERT, Heli-coil (AF) (91767)	2	FR	
-14	209-68015	. . BRACKET, BL48 missile wire bundle	2	FR	
-15	209-68018-1	. . CLIP, BL48 missile wire bundle LH	2	FR	
	209-68018-2	. . CLIP, BL48 missile wire bundle RH	2	FR	
-16	209-68020	. . SUPPORT, BL48 beam electrical plug	1	FR	
-17	AN3102A20-27P	. . CONNECTOR	1	FR	
	ATTACHING PARTS				
	AN515-4R8	. . SCREW	4	FR	
	2W18-4L	. . WASHER, Flat (NA) (89372)	8	FR	
	AN365-440	. . NUT	4	FR	
	---*---				
-18	54A3A225-20-27S	. . CONNECTOR	1	FR	
	209-89851-20	PACKAGE, Provisions for external stores (see figure 337 for breakdown)	1	JQ	
	209-89851-60	PACKAGE, Provisions for external stores (see figure 337 for breakdown)	1	JS	
-19	209-63012-1	. BEAM ASSEMBLY, BL153 adapter LH	1	ET	
	209-63012-2	. BEAM ASSEMBLY, BL153 adapter RH	1	ET	
	209-63202-61	PACKAGE, Provisions for external stores (see figure 337 for breakdown)	1	FR	
	209-63312-1	. BEAM ASSEMBLY, BL153 adapter LH	1	FR	
	209-63312-2	. BEAM ASSEMBLY, BL153 adapter RH	1	FR	
	209-89854	PACKAGE, 200 gallon fuel tank adapter beam (see figure 338 for breakdown)	1	ET	
-20	209-63011-1	. BEAM ASSEMBLY, BL105 adapter LH (superseded by 209-63011-31 for future procurement)	1	ET	511
	209-63011-31	. BEAM ASSEMBLY, BL105 adapter LH (supersedes 209-63011-1 for future procurement)	1	ET	
	209-63011-2	. BEAM ASSEMBLY, BL105 adapter RH (superseded by 209-63011-32 for future procurement)	1	ET	511
	209-63011-32	. BEAM ASSEMBLY, BL105 adapter RH (supersedes 209-63011-2 for future procurement)	1	ET	
	209-63202-51	PACKAGE, Provisions for external stores (see figure 339 for breakdown)	1	FR	511
	209-63202-151	PACKAGE, Provisions for external stores (see figure 339 for breakdown)	1	FR	
	209-63513-1	. BEAM ASSEMBLY, BL105 adapter LH (superseded by 209-63513-31 for future procurement) (see figure 339 for breakdown)	1	FR	511
	209-63513-2	. BEAM ASSEMBLY, BL105 adapter RH (superseded by 209-63513-32 for future procurement) (see figure 339 for breakdown)	1	FR	511
	209-63513-31	. BEAM ASSEMBLY, BL105 adapter LH (superseded by 209-63513-61 for future procurement) (see figure 339 for breakdown)	1	FR	511
	209-63513-61	. BEAM ASSEMBLY, BL105 adapter LH (supersedes 209-63513-31 for future procurement) (see figure 339 for breakdown)	1	FR	
	209-63513-32	. BEAM ASSEMBLY, BL105 adapter RH (superseded by 209-63513-62 for future procurement) (see figure 339 for breakdown)	1	FR	511
	209-63513-62	. BEAM ASSEMBLY, BL105 adapter RH (supersedes 209-63513-32 for future procurement) (see figure 339 for breakdown)	1	FR	
	209-63202-11	PACKAGE, Provision for external stores (see figure 340 for complete breakdown)	1	FR	526
	209-63202-111	PACKAGE, Provisions for external stores (see figure 340 for complete breakdown)	1	FR	
-21	209-63210-1	. PYLON, BL48 adapter assembly of LH	1	FR	
	209-63210-2	. PYLON, BL48 adapter assembly of RH (superseded by 209-63210-102 for future procurement)	1	FR	526
	209-63210-102	. PYLON, BL48 adapter assembly of RH (supersedes 209-63202-2 for future procurement)	1	FR	

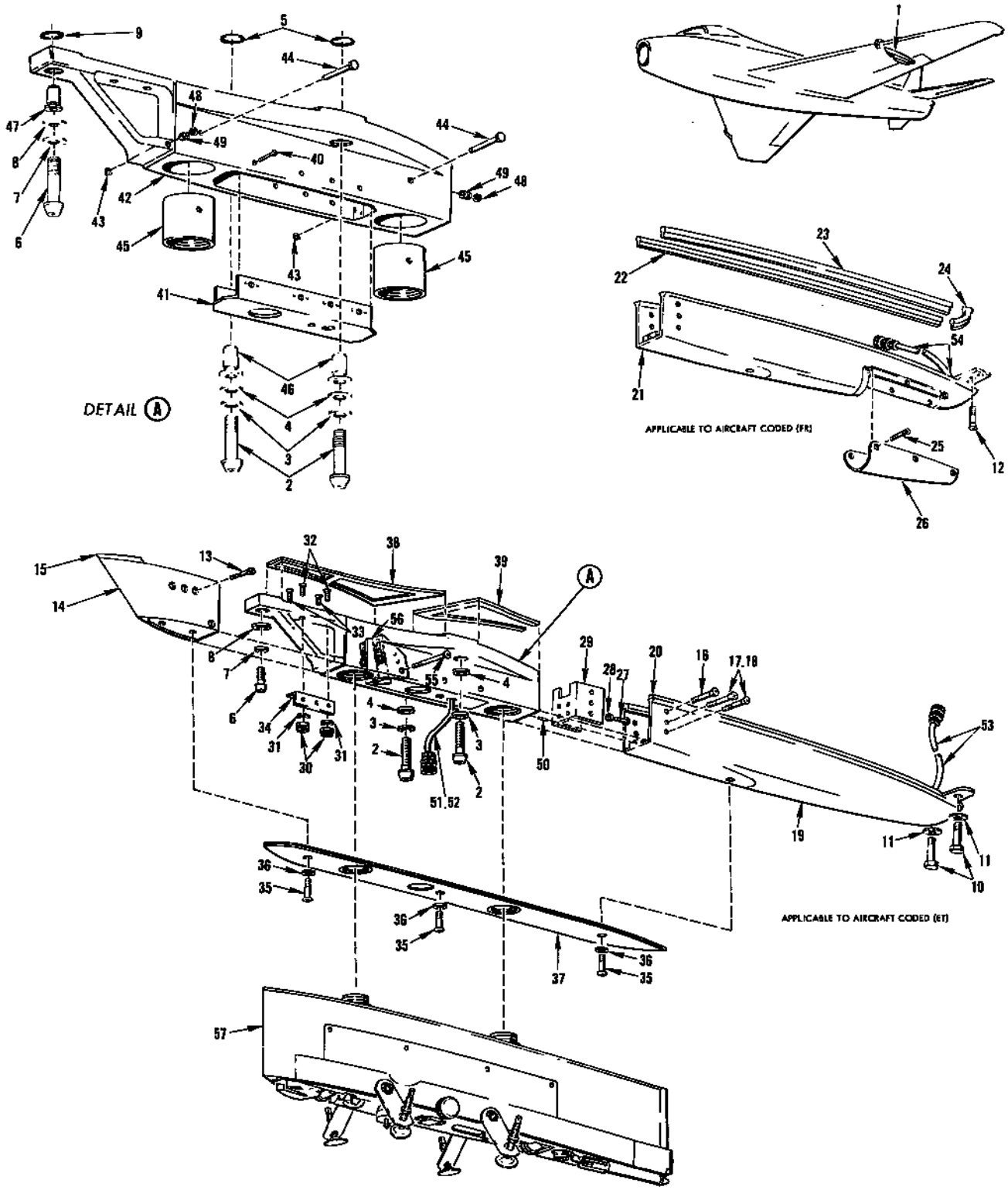

FIGURE 337 - EXTERNAL STORES PROVISION PACKAGES AT BL 153

EXTERNAL STORES PROVISION PACKAGES AT BL 153

FIGURE & INDEX NO.	PART NUMBER	1 2 3 4 5 6 7 NOMENCLATURE	UNITS PER ASSY.	USABLE ON CODE	S/C NO.
337	209-89851-20	PACKAGE, Provisions for external stores (see Electrical and Instrument)	1	JQ	
	209-89851-60	PACKAGE, Provisions for external stores	1	JS	
	209-63202-61	PACKAGE, Provisions for external stores	1	FR	
-1	209-63012-1	. BEAM ASSEMBLY, BL 153 adapter LH	1	ET	
	209-63012-2	. BEAM ASSEMBLY, BL 153 adapter RH	1	ET	
	209-63312-1	. BEAM ASSEMBLY, BL 153 adapter LH	1	FR	
	209-63312-2	. BEAM ASSEMBLY, BL 153 adapter RH	1	FR	
	ATTACHING PARTS				
-2	MS20008H18	. BOLT	2		
-3	MS20002C8	. WASHER	2		
-4	600-042-1/2	. STAT-O-SEAL (WFRC) (83259)	2		
-5	AN6227B11	. PACKING, "O" ring hydraulic	2		
-6	MS20007H22	. BOLT	1		
-7	MS20002C7	. WASHER	1		
-8	600-042-0.4375	. STAT-O-SEAL (WFRC) (83259)	1		
-9	AN6227B10	. PACKING, "O" ring hydraulic	1		
-10	AN3-7A	. BOLT	2	ET	
-11	2W18-10M	. WASHER, Flat (NA) (89372)	2	ET	
-12	7S15-10-15	. SCREW, 100° flush head (NA) (89372)	2	FR	
	---*---				
-13	AN507-1032R8	. . SCREW	6		
-14	209-63031-1	. . FAIRING ASSEMBLY, BL 153 adapter beam forward LH	1		
	209-63031-2	. . FAIRING ASSEMBLY, BL 153 adapter beam forward RH	1		
-15	209-63031-15	. . . SEAL, BL 153 adapter beam forward fairing assembly	1		
-16	AN507-632R8	. . SCREW	2		
-17	AN507-1032R12	. . SCREW	4	ET	
-18	AN507-1032R9	. . SCREW	4	FR	
-19	209-63033-1	. . FAIRING ASSEMBLY, BL 153 adapter beam aft LH	1	ET	
	209-63033-2	. . FAIRING ASSEMBLY, BL 153 adapter beam aft RH	1	ET	
-20	5W1-6-58-4	. . . WEATHERSEAL (NA) (89372)	1	ET	
-21	209-63235-1	. . FAIRING ASSEMBLY, BL 153 adapter beam aft LH	1	FR	
	209-63235-2	. . FAIRING ASSEMBLY, BL 153 adapter beam aft RH	1	FR	
-22	209-63235-43	. . . SEAL, BL 153 adapter beam aft fairing assembly	1	FR	
-23	209-63235-39	. . . SEAL, BL 153 adapter beam aft fairing assembly	1	FR	
-24	209-63235-45	. . . SEAL, BL 153 adapter beam aft fairing assembly	1	FR	
-25	AN509-10R6	. . . SCREW	6	FR	
-26	209-63235-7	. . . DOOR, BL 153 adapter beam aft fairing assembly	1	FR	
-27	AN3H3A	. . BOLT	4		
-28	2W18-10M	. . WASHER, Flat (NA) (89372)	4		
-29	209-63100-1	. . CHANNEL ASSEMBLY, Aft fairing attaching LH	1		
	209-63100-2	. . CHANNEL ASSEMBLY, Aft fairing attaching RH	1		
-30	AN365-1032	. . NUT	4		
-31	2W18-10	. . WASHER, Flat (NA) (89372)	4		
-32	AN507-1032R22	. . SCREW (outboard)	2		
-33	AN507-1032R20	. . SCREW (inboard)	2		
-34	209-63094-1	. . ANGLE ASSEMBLY, Fairing attaching forward LH	1		
	209-63094-2	. . ANGLE ASSEMBLY, Fairing attaching forward RH	1		
-35	AN520-10R16	. . SCREW	3		
-36	2W17-10M	. . WASHER, Corrosion-resistant steel (NA) (89372)	3		
-37	209-63349	. . PAD, Pylon to rack seal assembly of (supersedes 209-63182 together with 209-63183 for future procurement) 209-63349 is superseded by 209-63349-11 for future procurement)	1		
	209-63349-11	. . PAD, Pylon to rack seal assembly of (supersedes 209-63349 for future procurement)	1		
-38	209-63102-3	. . PAD ASSEMBLY, Pylon to wing seal (forward)	1		
-39	209-63102-5	. . PAD ASSEMBLY, Pylon to wing seal (aft)	1		
-40	AN507-1032R9	. . SCREW	8		
-41	209-63099	. . CHANNEL ASSEMBLY, Beam close-out	1		
-42	209-63032-11	. . BEAM ASSEMBLY, Adapter BL 153 LH	1		
	209-63032-12	. . BEAM ASSEMBLY, Adapter BL 153 RH	1		
-43	NAS51-37	. . . RING	2		
-44	209-63098	. . . PIN, Insert anchor adapter beam BL 153	2		
-45	209-63097	. . . INSERT, Adapter beam BL 153	2		
-46	209-63093	. . . BUSHING, Adapter beam BL 153	2		
-47	209-63092	. . . BUSHING, Adapter beam BL 153	1		
-48	RL24SB-7	. . . RING (ROSN) (83324)	6		
-49	RD205SB5.6L	. . . INSERT (ROSN) (83324)	6		
-50	209-63103	. . . PIN, Adapter beam BL 153	1		
-51	209-54395-13	. . CABLE ASSEMBLY, Outboard bomb rack	1	ET	
-52	209-54395-113	. . CABLE ASSEMBLY, Outboard bomb rack	1	FR	
-53	209-63012-11	. . HARNESS, BL 153 adapter beam assembly	1	ET	
-54	209-63312-11	. . HARNESS, BL 153 adapter beam assembly	1	FR	
-55	AN509-1032R8	. . SCREW	2	FR	
-56	244-63311	. . BRACKET, BP 153 adapter electric bomb fuzing assembly of (added by Service Change 524)	1	FR	
	NAS687A3	. . . NUT	4	FR	
-57	No Number	LAUNCHER, Bomb and rocket (Aero 15B or Aero 15C) (GFP)	1	FR	

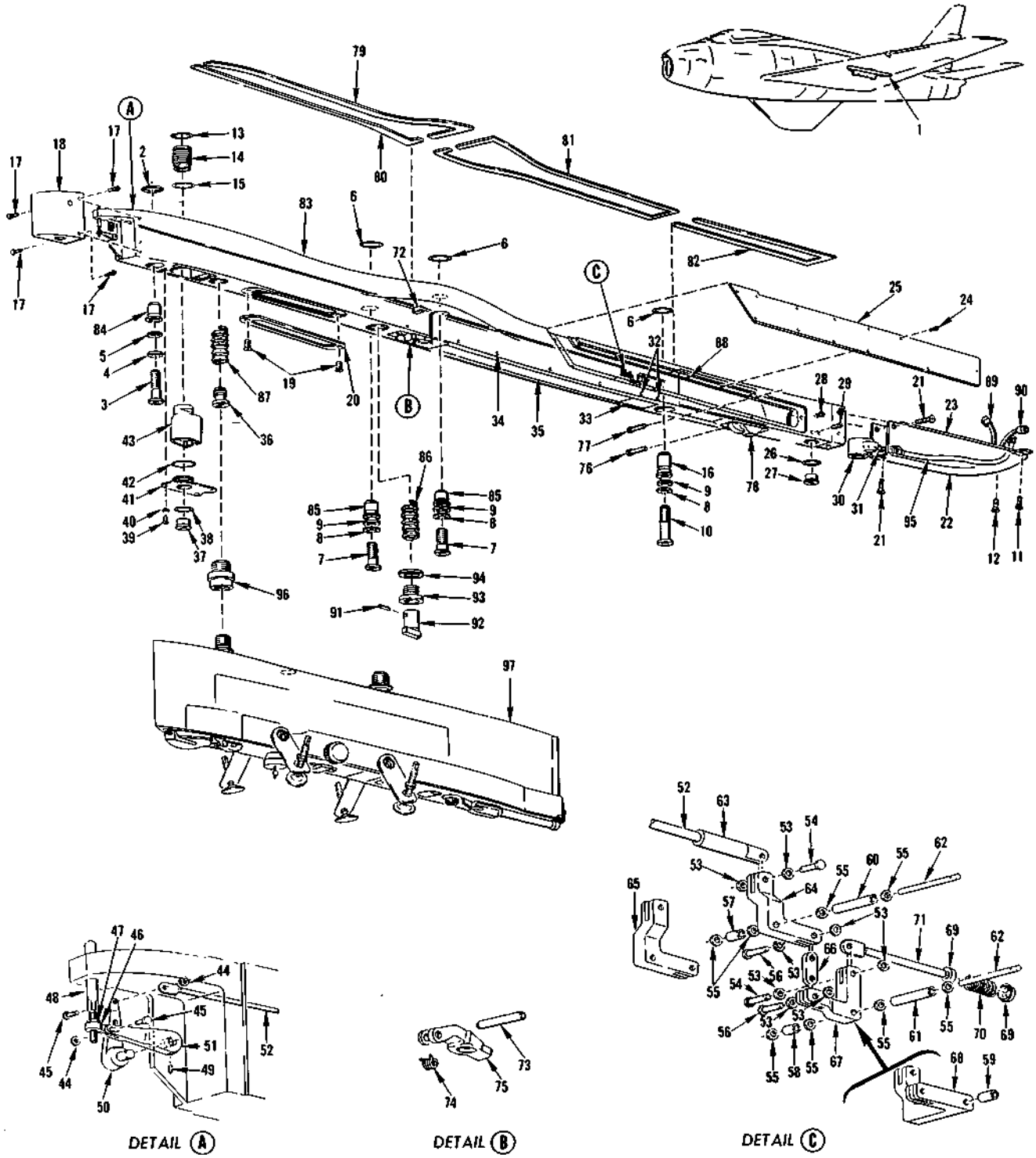

FIGURE 338 - EXTERNAL STORES PYLON AT BL 105 - APPLICABLE TO AIRCRAFT CODED (ET)

EXTERNAL STORES PYLON AT BL 105 - APPLICABLE TO AIRCRAFT CODED (ET)

FIGURE & INDEX NO.	PART NUMBER	1 2 3 4 5 6 7 NOMENCLATURE	UNITS PER ASSY.	USABLE ON CODE	S/C NO.
338	209-89854	PACKAGE, 200 gallon fuel tank adapter beam	1	ET	479
-1	209-63011-1	. BEAM ASSEMBLY, BL 105 adapter LH (superseded by 209-63011-31 for future procurement)	1	ET	511
	209-63011-21	. BEAM ASSEMBLY, BL 105 adapter LH (superseded by 209-63011-31 for future procurement)	1	ET	
	209-63011-31	. BEAM ASSEMBLY, BL 105 adapter LH (supersedes 209-63011-1 and 209-63011-21 for future procurement)	1	ET	
	209-63011-2	. BEAM ASSEMBLY, BL 105 adapter RH (superseded by 209-63011-32 for future procurement)	1	ET	511
	209-63011-22	. BEAM ASSEMBLY, BL 105 adapter RH (superseded by 209-63011-32 for future procurement)	1	ET	
	209-63011-32	. BEAM ASSEMBLY, BL 105 adapter RH (supersedes 209-63011-2 and 209-63011-22 for future procurement)	1	ET	
	ATTACHING PARTS				
-2	AN6227B13	. PACKING	1	ET	
-3	MS20010H18	. BOLT	1	ET	479
-4	MS20002C10	. WASHER	1	ET	
-5	600-001-5/8	. STAT-O-SEAL (WFRC) (83259)	1	ET	
-6	AN6227B13	. PACKING	3	ET	
-7	MS20009H18	. BOLT	2	ET	
-8	MS20002C9	. WASHER	3	ET	
-9	600-001-9/16	. STAT-O-SEAL (WFRC) (83259)	3	ET	
-10	MS20009H30	. BOLT	1	ET	
-11	AN509-10R9	. SCREW	1	ET	
-12	AN509-10R8	. SCREW	1	ET	
-13	MS29513-119	. PACKING (MS29513-119 together with 209-48394-11 supersedes MS29512-12 together with 209-48394 for future procurement)	1	ET	
-14	209-48394-11	. NIPPLE, Underwing droppable fuel tank (209-48394-11 together with MS29513-119 supersedes 209-48394 together with MS29512-12 for future procurement)	1	ET	
-15	MS29513-214	. PACKING	1	ET	
-16	209-63007	. BUSHING, Inboard pylon attaching aft	1	ET	
	---*---				
-17	AN507-1032R8	. . SCREW	4	ET	
-18	209-63021-11	. . FAIRING ASSEMBLY, BL 105 adapter beam nose LH	1	ET	
	209-63021-12	. . FAIRING ASSEMBLY, BL 105 adapter beam nose RH	1	ET	
-19	AN567-1032R8	. . SCREW	1	ET	
-20	209-63113	. . DOOR ASSEMBLY, BL 105 adapter beam wire access	1	ET	
-21	AN507-1032R14	. . SCREW	3	ET	
-22	209-63124-1	. . FAIRING ASSEMBLY, BL 105 adapter beam aft LH	1	ET	
	209-63124-2	. . FAIRING ASSEMBLY, BL 105 adapter beam aft RH	1	ET	
-23	209-63124-27	. . . SEAL, BL 105 adapter beam aft fairing assembly	1	ET	
-24	AN507-832R8	. . SCREW	14	ET	
-25	209-63156-1	. . FAIRING, BL 105 adapter beam side LH	1	ET	
	209-63156-2	. . FAIRING, BL 105 adapter beam side RH	1	ET	
-26	209-48399	. . PLUG, 200-gallon underwing type II fuel beam air	1	ET	
-27	MS29513-210	. . PACKING	1	ET	
-28	AN507-1032R16	. . SCREW (outboard only)	1	ET	
	2W1AL14-14-16	. . WASHER, Plain (NA) (89372) (outboard only)	1	ET	
	2W18-10M	. . WASHER, Flat (NA) (89372) (outboard only)	1	ET	
	AN365-1032	. . NUT (outboard only)	1	ET	
-29	AN507-1032D16	. . SCREW	4	ET	
-30	209-48389	. . FITTING ASSEMBLY, 200-gallon underwing type II fuel tank beam air	1	ET	
	RL24SB-7	. . . RING (ROSN) (83324)	4	ET	
	RD205SB-5-51	. . . INSERT (ROSN) (83324)	4	ET	
-31	AN815-6D	. . UNION	1	ET	
	MS29512-6	. . GASKET	1	ET	
-32	AN507-1032R18	. . SCREW (outboard side only)	14	ET	
	AN507-1032R12	. . SCREW (inboard side only)	2	ET	
-33	209-63169-3	. . . CLOSE-OUT, BL 105 adapter beam aft LH (install flush with bottom surface at both ends)	1	ET	
	209-63169-4	. . . CLOSE-OUT, BL 105 adapter beam RH (install flush with bottom surface at both ends)	1	ET	
-34	AN507-1032R18	. . SCREW (outboard side only)	5	ET	
	AN507-1032R14	. . SCREW (inboard side only)	5	ET	
-35	209-63169-1	. . CLOSE-OUT, BL 105 adapter beam aft LH (install flush with bottom surface at both ends)	1	ET	
	209-63169-2	. . CLOSE-OUT, BL 105 adapter beam aft RH (install flush with bottom surface at both ends)	1	ET	
-36	209-63130	. . PLUG, BL 105 adapter beam	1	ET	
-37	209-48398	. . PLUG, 200 gallon underwing type II fuel tank beam fuel fitting	1	ET	
-38	MS29513-210	. . PACKING	1	ET	
-39	AN501A10-8	. . SCREW	4	ET	
-40	2W1AL16-14-32	. . WASHER, Plain (NA) (89372)	4	ET	
-41	1111-558177	. . VALVE, Swing check (PAET) (92003)	1	ET	
-42	MS29513-223	. . PACKING	1	ET	
-43	209-48393-1	. . HOUSING, Underwing droppable fuel tank check valve LH	1	ET	
	209-48393-2	. . HOUSING, Underwing droppable fuel tank check valve RH	1	ET	
-44	2W1AL10-8-32	. . WASHER, Plain (NA) (89372)	2	ET	
-45	AN392-11	. . PIN	2	ET	
-46	209-63160	. . FITTING, Pylon mechanical release adjusting	1	ET	
-47	AN315-3R	. . NUT	1	ET	

EXTERNAL STORES PYLON AT BL 105 - APPLICABLE TO AIRCRAFT CODED (ET)

FIGURE & INDEX NO.	PART NUMBER	1	2	3	4	5	6	7	NOMENCLATURE	UNITS PER ASSY.	USABLE ON CODE	S/C NO.
338 -48	209-63273	.	.						PLUNGER, BL 105 adapter beam mechanical release forward (supersedes 209-63073 for future procurement)	1	ET	
-49	52-022-094-0562	.	.						ROLLPIN (EN) (72962)	1	ET	
-50	209-63162-3	.	.						ARM, Pylon mechanical release actuating vertical	1	ET	
-51	209-63164-3	.	.						LEVER, Pylon mechanical release forward horizontal	1	ET	
-52	209-63263-5	.	.						ROD, Pylon BL 105 mechanical release tension (supersedes 209-63163 for future procurement)	1	ET	
-53	2W1AL10-8-32	.	.						WASHER, Plain (NA) (89372)	8	ET	
-54	AN392-9	.	.						PIN	2	ET	
-55	2W1AL16-14-32	.	.						WASHER, Plain (NA) (89372)	8	ET	
-56	AN392-11	.	.						PIN	2	ET	
-57	NAS43DD3-22	.	.						SPACER	1	ET	
-58	NAS43DD3-28	.	.						SPACER (LH only)	1	ET	
-59	NAS43DD3-74	.	.						SPACER	1	ET	
-60	NAS43DD3-74	.	.						SPACER	1	ET	
-61	NAS43DD3-68	.	.						SPACER (LH only)	1	ET	
-62	209-63267	.	.						PIN, Emergency release bellcrank (supersedes 209-63167 for future procurement)	2	ET	
-63	209-63181	.	.						FITTING, Adapter beam rod end	1	ET	
-64	209-63165	.	.						BELLCRANK, Adapter beam mechanical release aft (LH only)	1	ET	
-65	209-63151	.	.						BELLCRANK, Fuel tank adapter beam (RH only)	1	ET	
-66	209-63161	.	.						LINK, Pylon mechanical release aft bellcrank	1	ET	
-67	209-63165	.	.						BELLCRANK, Adapter beam mechanical release aft (LH only)	1	ET	
-68	209-63166	.	.						BELLCRANK, Adapter beam mechanical release (RH only)	1	ET	
-69	209-63170	.	.						CUP, Mechanical release return spring	2	ET	
-70	209-63090	.	.						SPRING, Compression	1	ET	
-71	209-63082	.	.						PUSH ROD, BL 105 adapter beam mechanical release	1	ET	
-72	209-63159	.	.						GUIDE ASSEMBLY, Pylon BL 105 operating rod	1	ET	
	ATTACHING PARTS											
	AN507-1032R10	.	.						SCREW	1	ET	
	---*---											
-73	209-48271	.	.						PIN, 200-gallon fuel tank forward support pivot	1	ET	
-74	209-63187	.	.						SPRING, Tank adapter beam front post support	1	ET	
-75	209-48322-3	.	.						SUPPORT, 200-gallon fuel tank front post	1	ET	
-76	209-48383	.	.						PIN, Fuel tank release mechanical jaw (shim as required)	1	ET	
-77	209-48265	.	.						PIN, Fuel tank release mechanical fitting (shim as required)	1	ET	
-78	209-48227-11								MECHANISM ASSEMBLY, Fuel tank rear post release (supersedes 209-48227 and superseded by 209-48227-41 for future procurement) (see figure 341 for breakdown)	1	ET	511
	209-48227-31	.	.						MECHANISM ASSEMBLY, Fuel tank rear post release (superseded by 209-48227-41 for future procurement) (see figure 341 for breakdown)	1	ET	511
	209-48227-41	.	.						MECHANISM ASSEMBLY, Fuel tank rear post release (supersedes 209-48227-11 and 209-48227-31 for future procurement) (see figure 341 for breakdown)	1	ET	
-79	209-63186-19	.	.						PAD, Pylon to wing seal BL 105 (forward outboard)	1	ET	
-80	209-63186-17	.	.						PAD, Pylon to wing seal BL 105 (forward inboard)	1	ET	
-81	209-63186-15	.	.						PAD, Pylon to wing seal BL 105 (center)	1	ET	
-82	209-63186-13	.	.						PAD, Pylon to wing seal BL 105 (aft)	1	ET	
-83	209-63024-11	.	.						BEAM ASSEMBLY, Adapter BL 105 forward LH	1	ET	
	209-63024-12	.	.						BEAM ASSEMBLY, Adapter BL 105 forward RH	1	ET	
-84	209-63006	.	.	.					BUSHING, Inboard pylon attaching forward	1	ET	
-85	209-63004	.	.	.					BUSHING, Inboard pylon attaching	2	ET	
-86	1185-24CNx-1/-1/8	.	.	.					INSERT, Heli-coil (AF) (91767)	1	ET	
-87	1185-24CNx-7/8	.	.	.					INSERT, Heli-coil (AF) (91767)	1	ET	
	RL24SB-7	.	.	.					RING (ROSN) (83324)	11	ET	
	RD205SB-5.5L	.	.	.					INSERT (ROSN) (83324)	11	ET	
-88	RL21SB-6	.	.	.					RING (ROSN) (83324)	14	ET	
	RD104SB-5L	.	.	.					INSERT (ROSN) (83324)	14	ET	
-89	209-54395-11	.	.						CABLE ASSEMBLY, Inboard bomb rack	1	ET	
-90	209-63011-11	.	.						HARNESS, BL 105 adapter beam assembly	1	ET	
	209-482108	.	.						ADAPTER, Beam assembly to 200-gallon fuel tank assembly of	1	ET	
-91	79-040-187-1125	.	.	.					ROLLPIN (EN) (72962)	1	ET	
-92	209-482106	.	.	.					PIN, 200-gallon fuel tank post front drag	1	ET	
-93	209-482107	.	.	.					ADAPTER, Adapter beam forward post BL 105 assembly of	1	ET	
-94	2W1AL100-68-20	.	.						WASHER, Plain (NA) (89372)	1	ET	
-95	209-583143	.							LINE, Drop tank air pressure outboard assembly of (see Fuel System for continuation)	1	ET	
	MS29512-6	.							GASKET	1	ET	
	MS29513-13	.							PACKING	2	ET	
-96	209-63022-11	.							ADAPTER, Beam assembly to combination rack and launcher	1	ET	
	209-63022	.		.					ADAPTER, Beam subassembly to combination rack and launcher	1	ET	
	209-63022-3	.		.					PLUG	1	ET	
-97	No Number	.							LAUNCHER ASSEMBLY, Bomb and rocket (Aero 15B or Aero 15C) (GFP)	1	ET	

EXTERNAL STORES PYLON AT BL 105 - APPLICABLE TO AIRCRAFT CODED (FR)

FIGURE & INDEX NO.	PART NUMBER	1 2 3 4 5 6 7 NOMENCLATURE	UNITS PER ASSY.	USABLE ON CODE	S/C NO.
339	209-63202-51	*1 PACKAGE, Provisions for external stores	1	FR	511
	209-63202-151	PACKAGE, Provision for external stores	1	FR	511
	209-63513-1	. BEAM ASSEMBLY, BL 105 adapter LH (superseded by 209-63202-31 for future procurement)	1	KX	511
	209-63513-2	. BEAM ASSEMBLY, BL 105 adapter RH (superseded by 209-63202-32 for future procurement)	1	KX	511
	209-63513-31	. BEAM ASSEMBLY, BL 105 adapter LH (supersedes 209-63513-1 and superseded by 209-63513-61 for future procurement)	1	KY	511
	209-63513-32	. BEAM ASSEMBLY, BL 105 adapter RH (supersedes 209-63513-2 and superseded by 209-63513-62 for future procurement)	1	KY	511
	209-63513-51	. BEAM ASSEMBLY, BL 105 adapter LH (superseded by 209-63513-61 for future procurement)	1	FR	
	209-63513-52	. BEAM ASSEMBLY, BL 105 adapter RH (superseded by 209-63513-62 for future procurement)	1	FR	
	209-63513-61	. BEAM ASSEMBLY, BL 105 adapter LH (supersedes 209-63513-31 and 209-63513-51 for future procurement)	1	KY	
	209-63513-62	. BEAM ASSEMBLY, BL 105 adapter RH (supersedes 209-63513-32 and 209-63513-52 for future procurement)	1	KY	
	ATTACHING PARTS				
-1	MS20010H20	. BOLT	1	FR	
-2	MS20002C10	. WASHER	1	FR	
-3	600-001-5/8	. STAT-O-SEAL (WFRC) (83259)	1	FR	
-4	AN6227B13	. PACKING	1	FR	
-5	MS20009H20	. BOLT	2	FR	
-6	MS20002C9	. WASHER	2	FR	
-7	600-001-9/16	. STAT-O-SEAL (WFRC) (83259)	2	FR	
-8	AN6227B12	. PACKING	2	FR	
-9	MS20009H30	. BOLT	1	FR	
-10	MS20002C9	. WASHER	1	FR	
-11	600-001-9/16	. STAT-O-SEAL (WFRC) (83259)	1	FR	
-12	209-63007	. BUSHING, Inboard pylon attaching aft	1	FR	
-13	AN6227B12	. PACKING	1	FR	
-14	AN509-10R14	. SCREW	2	FR	
	---*---				
-15	209-63186-19	. . PAD, Pylon to wing seal BL 105	1	FR	
-16	209-63186-17	. . PAD, Pylon to wing seal BL 105	1	FR	
-17	209-63186-15	. . PAD, Pylon to wing seal BL 105	1	FR	
-18	209-63287	. . PAD, BL 105 adapter beam aft	2	FR	
-19	AN507-1032R8	. . SCREW	4	FR	
-20	209-63021-11	. . FAIRING, BL 105 adapter beam nose assembly of LH	1	FR	
	209-63021-12	. . FAIRING, BL 105 adapter beam nose assembly of RH	1	FR	
-21	AN501A10-8	. . SCREW	4	FR	
-22	2W1AL16-14-32	. . WASHER, Plain (NA) (89372)	4	FR	
-23	1111-558177	. . VALVE, Swing check (PAET) (92003)	1	FR	
-24	209-48398	. . PLUG, 200-gallon underwing type II fuel tank beam fuel fitting	1	FR	
-25	MS29513-214	. . PACKING	1	FR	
-26	MS29513-223	. . PACKING	1	FR	
-27	209-48393-1	. . HOUSING, Underwing droppable fuel tank check valve LH	1	FR	
	209-48393-2	. . HOUSING, Underwing droppable fuel tank check valve RH	1	FR	
-28	209-63130	. . PLUG, BL 105 adapter beam	1	FR	
-29	AN507-1032R8	. . SCREW	2	FR	
-30	209-63113	. . DOOR ASSEMBLY, BL 105 adapter beam wire access	1	FR	
-31	9C1-3-7	. . . CHAIN, Safety (NA) (89372)	1	FR	
-32	209-63113-7	. . . SEAL, BL 105 adapter beam wire access door assembly	1	FR	
	209-482108	. . ADAPTER, Beam assembly to 200-gallon fuel tank assembly of	1	FR	
-33	79-040-187-1125	. . . ROLLPIN (EN) (72962)	1	FR	
-34	209-482106	. . . PIN, 200-gallon fuel tank post front drag	1	FR	
-35	209-482107	. . . ADAPTER, Adapter beam forward post BL 105 assembly of	1	FR	
-36	2W1AL100-68-20	. . WASHER, Plain (NA) (89372)	1	FR	
-37	AN507-832R8	. . SCREW	13	FR	
-38	209-63288-1	. . FAIRING, BL 105 adapter beam side LH	1	FR	
	209-63288-2	. . FAIRING, BL 105 adapter beam side RH	1	FR	
-39	209-48265	. . PIN, Fuel tank release mechanism fitting	1	FR	
-40	209-48383	. . PIN, Fuel tank release mechanism jaw	1	FR	
-41	209-48227-11	. . MECHANISM ASSEMBLY, Fuel tank rear post release (superseded by 209-48227-21 for future procurement) (see figure 341 for breakdown)	1	KX	511
	209-48227-21	. . MECHANISM ASSEMBLY, Fuel tank rear post release (supersedes 209-48227-11 and superseded by 209-48227-41 for future procurement) (see figure 341 for breakdown)	1	KY	511
	209-48227-31	. . MECHANISM ASSEMBLY, Fuel tank rear post release (superseded by 209-48227-41 for future procurement) (see figure 341 for breakdown)	1	FR	
	209-48227-41	. . MECHANISM ASSEMBLY, Fuel tank rear post release (supersedes 209-48227-21 and 209-48227-31 for future procurement) (see figure 341 for breakdown)	1	FR	
-42	AN509-10R6	. . SCREW	4	FR	
-43	AN509-10R9	. . SCREW	2	FR	
-44	AN509-10R10	. . SCREW	2	FR	
-45	209-63276-1	. . FAIRING ASSEMBLY, BL 105 beam aft LH	1	FR	
	209-63276-2	. . FAIRING ASSEMBLY, BL 105 beam aft RH	1	FR	
-46	AN509-10R8	. . . SCREW	3	FR	
-47	209-63276-21	. . . FAIRING SUBASSEMBLY, BL 105 beam aft LH	1	FR	

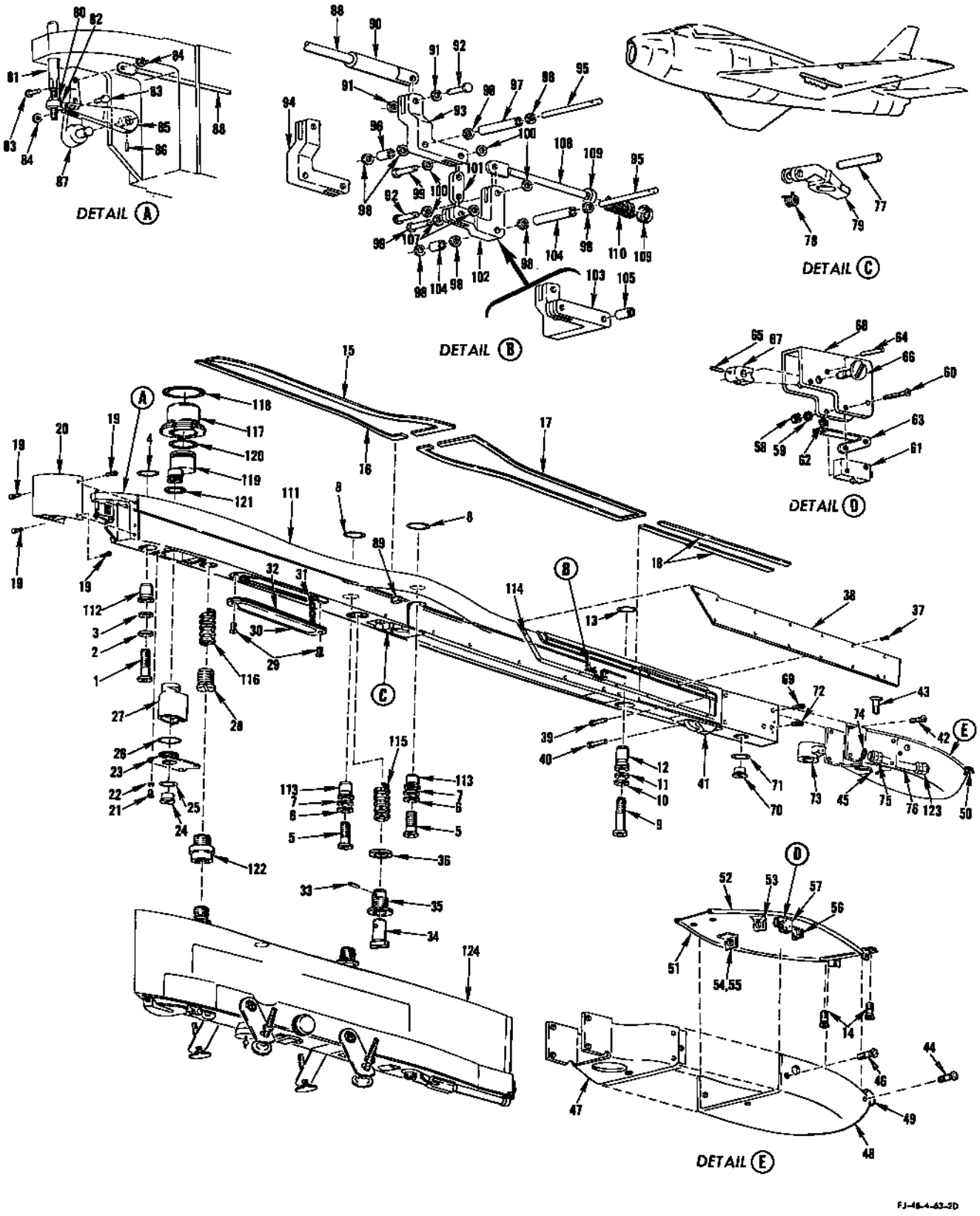

FIGURE 339 - EXTERNAL STORES PYLON AT BL 105 - APPLICABLE TO AIRCRAFT CODED (FR)

EXTERNAL STORES PYLON AT BL 105 - APPLICABLE TO AIRCRAFT CODED (FR)

FIGURE & INDEX NO.	PART NUMBER	1	2	3	4	5	6	7	NOMENCLATURE	UNITS PER ASSY.	USABLE ON CODE	S/C NO.
339	209-63276-22	.	.	.					FAIRING SUBASSEMBLY, BL 105 beam aft RH	1	FR	
-48	209-63276-31	.	.	.					FAIRING SUBASSEMBLY, BL 105 beam aft LH	1	FR	
	209-63276-32	.	.	.					FAIRING SUBASSEMBLY, BL 105 beam aft RH	1	FR	
-49	209-63276-13	.	.	.	.				SEAL, BL 105 beam aft fairing subassembly	1	FR	
-50	209-63277-1	.	.						PLATE ASSEMBLY, BL 105 beam adapter LH	1	FR	
	209-63277-2	.	.						PLATE ASSEMBLY, BL 105 beam adapter RH	1	FR	
-51	209-63277-19	.	.	.					SEAL, BL 105 beam adapter plate assembly	1	FR	
-52	209-63277-21	.	.	.					SEAL, BL 105 beam adapter plate assembly	1	FR	
-53	209-63277-23	.	.	.					BRACKET, BL 105 beam adapter plate assembly	1	FR	
-54	209-63284	.	.	.					BRACKET ASSEMBLY, BL 105 beam plate (LH only)	1	FR	
	2182-10	.	.	.	.				RECEPTACLE (CED) (71468) (LH only)	1	FR	
-55	209-63286	.	.	.					BRACKET ASSEMBLY, BL 105 beam plate (RH only)	1	FR	
	2182-9	.	.	.	.				RECEPTACLE (CED) (71468) (RH only)	1	FR	
-56	209-63285	.	.	.					BRACKET ASSEMBLY, BL 105 beam plate (LH only)	1	FR	
	2182-11	.	.	.	.				RECEPTACLE (CED) (71468) (LH only)	1	FR	
-57	209-63283-1	.	.	.					SWITCH ASSEMBLY, BL 105 beam adapter LH	1	FR	
	209-63283-2	.	.	.					SWITCH ASSEMBLY, BL 105 beam adapter RH	1	FR	
-58	AN365-4-40NC	.	.	.	.				NUT	2	FR	
-59	2W18-4	.	.	.	.				WASHER, Flat (NA) (89372)	2	FR	
-60	AN515-4R16	.	.	.	.				SCREW	2	FR	
-61	V3-444	.	.	.	.				SWITCH (MCS) (91929) (supersedes AN3234-1 for future procurement	1	FR	
-62	209-63279	.	.	.	.				BUTTON, BL 105 beam plate	1	FR	
-63	209-63282	.	.	.	.				CLIP, BL 105 beam plate spring	1	FR	
-64	59-028-125-0687	.	.	.	.				ROLLPIN (EN) (72962)	2	FR	
-65	59-022-094-0500	.	.	.	.				ROLLPIN (EN) (72962)	1	FR	
-66	209-63281	.	.	.	.				SHAFT, BL 105 beam plate	1	FR	
-67	209-63280	.	.	.	.				CAM, BL 105 beam plate	1	FR	
-68	209-63278	.	.	.	.				CHANNEL, BL 105 beam plate	1	FR	
-69	AN507-1032R16	.	.						SCREW	1	FR	
	2W1AL14-14-16	.	.						WASHER, Plain (NA) (89372)	1	FR	
	2W18-10M	.	.						WASHER, Flat (NA) (89372)	1	FR	
	AN365-1032	.	.						NUT	1	FR	
-70	209-48399	.	.						PLUG, 200-gallon underwing type II fuel beam air	1	FR	
-71	MS29513-210	.	.						PACKING	1	FR	
-72	AN507-1032R16	.	.						SCREW	4	FR	
-73	209-48389	.	.						FITTING ASSEMBLY, 200-gallon underwing type II fuel tank beam air	1	FR	
-74	MS29512-6	.	.						GASKET	1	FR	
-75	AN815-6D	.	.						UNION	1	FR	
-76	R3800-6-0070	.	.						HOSE (RF) (50599)	1	FR	
-77	209-48271	.	.						PIN, 200-gallon fuel tank forward support pivot	1	FR	
-78	209-63187	.	.						SPRING, Tank adapter beam front post support	1	FR	
-79	209-48322-3	.	.						SUPPORT, 200-gallon fuel tank front post	1	FR	
-80	AN315-3R	.	.						NUT	1	FR	
-81	209-63273	.	.						PLUNGER, BL 105 adapter beam mechanism forward (supersedes 209-63073 for future procurement)	1	FR	
-82	209-63160	.	.						FITTING, Pylon mechanical release adjusting	1	FR	
-83	AN392-11	.	.						PIN	2	FR	
-84	2W1AL10-8-32	.	.						WASHER, Plain (NA) (89372)	2	FR	
-85	209-63164-3	.	.						LEVER, Pylon mechanical release actuating vertical	1	FR	
-86	52-022-094-0562	.	.						ROLLPIN (EN) (72962)	1	FR	
-87	209-63162-3	.	.						ARM, Pylon mechanical release actuating vertical	1	FR	
-88	209-63263-5	.	.						ROD, Pylon BL 105 mechanical release tension (supersedes 209-63163 for future procurement)	1	FR	
-89	209-63159	.	.						GUIDE, Pylon BL 105 operating rod	1	FR	
	ATTACHING PARTS											
	AN507-103R10	.	.						SCREW	1	FR	
	---*---											
-90	209-63181	.	.						FITTING, Adapter beam rod end	1	FR	
-91	2W1AL10-8-32	.	.						WASHER, Plain (NA) (89372)	2	FR	
-92	AN392-9	.	.						PIN	2	FR	
-93	209-63165	.	.						BELLCRANK, Adapter beam mechanical release aft LH	1	FR	
-94	209-63151	.	.						BELLCRANK, Fuel tank adapter beam RH	1	FR	
-95	209-63267	.	.						PIN, Emergency release bellcrank (supersedes 209-63167 for future procurement)	2	FR	
-96	NAS43DD3-22	.	.						SPACER	1	FR	
-97	NAS43DD3-74	.	.						SPACER	1	FR	
-98	2W1AL16-14-32	.	.						WASHER, Plain (NA) (89372)	8	FR	
-99	AN392-11	.	.						PIN	2	FR	
-100	2W1AL10-8-32	.	.						WASHER, Plain (NA) (89372)	4	FR	
-101	209-63161	.	.						LINK, Pylon mechanical release aft bellcrank	1	FR	
-102	209-63165	.	.						BELLCRANK, Adapter beam mechanical release aft LH	1	FR	
-103	209-63166	.	.						BELLCRANK, Adapter beam mechanical release RH	1	FR	
-104	NAS43DD3-68	.	.						SPACER (LH only)	1	FR	
-105	NAS43DD3-26	.	.						SPACER (RH only)	1	FR	
-106	NAS43DD3-28	.	.						SPACER	1	FR	
-107	2W1AL10-8-32	.	.						WASHER, Plain (NA) (89372)	2	FR	
-108	209-63082	.	.						PUSH ROD, BL 105 adapter beam mechanical release	1	FR	
-109	209-63170	.	.						CUP, Mechanical release return spring	2	FR	
-110	209-63090	.	.						SPRING, Compression	1	FR	
-111	209-63024-21	.	.						BEAM ASSEMBLY, Adapter BL 105 forward LH	1	FR	
	209-63024-22	.	.						BEAM ASSEMBLY, Adapter BL 105 forward RH	1	FR	
-112	209-63006	.	.	.					BUSHING, Inboard pylon attaching forward	1	FR	

EXTERNAL STORES PYLON AT BL 105 - APPLICABLE TO AIRCRAFT CODED (FR)

FIGURE & INDEX NO.	PART NUMBER	1	2	3	4	5	6	7	NOMENCLATURE	UNITS PER ASSY.	USABLE ON CODE	S/C NO.
339-113	209-63004	.	.	.					BUSHING, Inboard pylon attaching	2	FR	
-114	RD104SB-5L	.	.	.					INSERT (ROSN) (83324)	13	FR	
	RL21SB-6	.	.	.					RING (ROSN)(83324)	13	FR	
-115	1185-24CNx-1-1/8	.	.	.					INSERT, Heli-coil (AF) (91767)	1	FR	
-116	1185-24CNx-7/8	.	.	.					INSERT, Heli-coil (AF) (91767)	1	FR	
	RL24SB-7	.	.	.					RING (ROSN) (83324)	17	FR	
	RD205SB-5.5L	.	.	.					INSERT (ROSN) (83324)	17	FR	
-117	209-483159	.							ADAPTER, Drop tank fuel BL 105	1	FR	
-118	MS29513-145	.							PACKING	1	FR	
-119	209-483220-1	.							NIPPLE, Adapter beam to wing BL 105 fuel LH	1	FR	
	209-483220-2	.							NIPPLE, Adapter beam to wing BL 105 fuel RH	1	FR	
-120	MS29513-224	.							PACKING	1	FR	
-121	MS29513-214	.							PACKING	1	FR	
-122	209-63022-11	.							ADAPTER, Beam assembly to combination rack and launcher assembly of	1	FR	
-123	AN919-12D	.							REDUCER	1	FR	
-124	No Number	.							RACK AND LAUNCHER, Bomb and rocket combination (Aero 15B or Aero 15C) (GFP)	1	FR	

THIS PAGE LEFT BLANK INTENTIONALLY

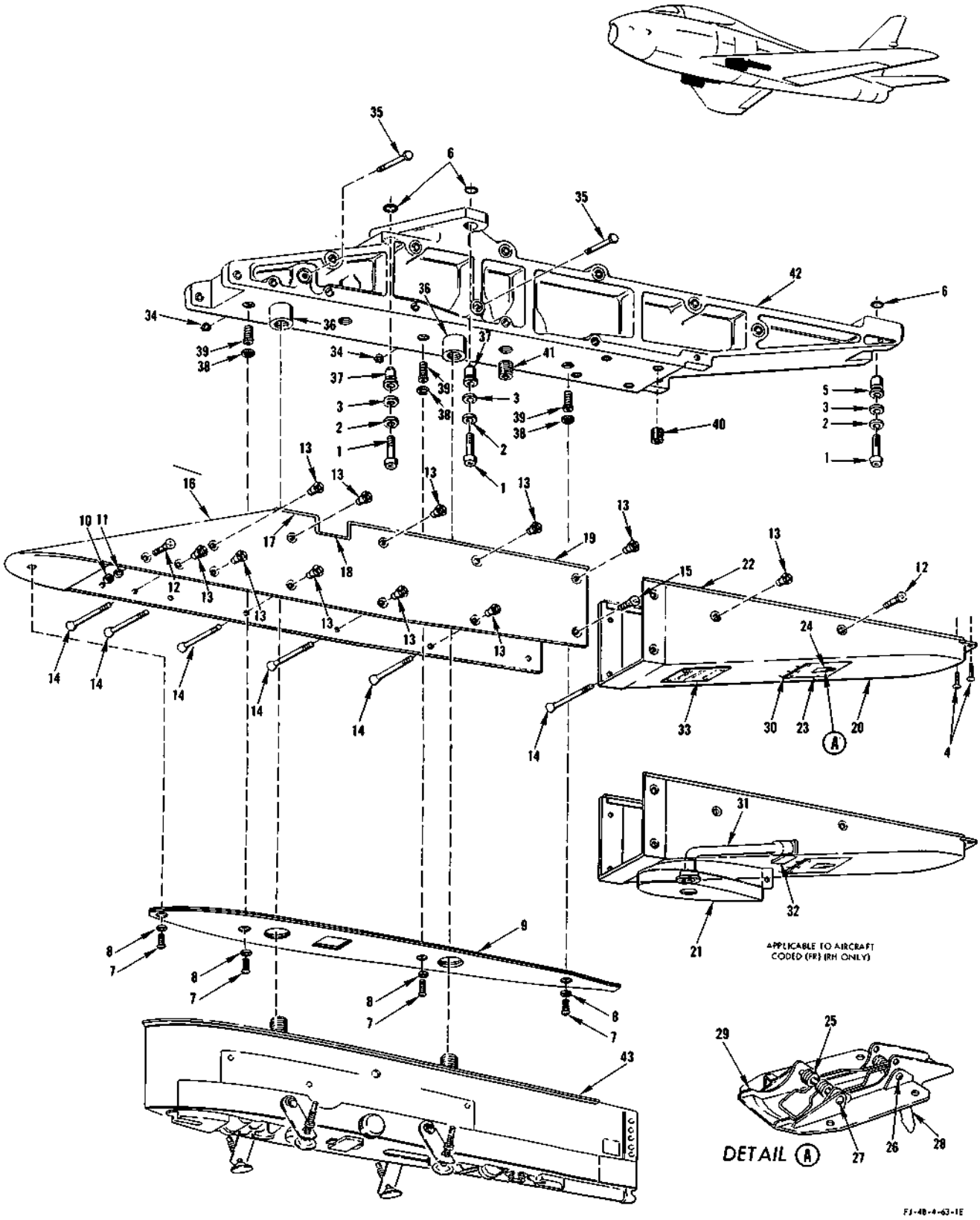

FIGURE 340 - EXTERNAL STORES PYLON AT BL 48 - APPLICABLE TO AIRCRAFT CODED (FR)

EXTERNAL STORES PYLON AT BL 48 - APPLICABLE TO AIRCRAFT CODED (FR)

FIGURE & INDEX NO.	PART NUMBER	1	2	3	4	5	6	7	NOMENCLATURE	UNITS PER ASSY.	USABLE ON CODE	S/C NO.
340	209-63202-11	*1	PACKAGE, Provision for external stores							1	KX	526
	209-63202-111		PACKAGE, Provision for external stores							1	FR	
	209-63210-1	.	PYLON, BL 48 adapter assembly of LH							1	FR	
	209-63210-2	*2	.	PYLON, BL 48 adapter assembly of RH (superseded by 209-63210-102 for future procurement)						1	KX	526
	209-63210-102		.	PYLON, BL 48 adapter assembly of RH (supersedes 209-63210-2 for future procurement)						1	FR	
	ATTACHING PARTS											
-1	MS20009H20		.	BOLT						3	FR	
-2	MS20002C9		.	WASHER						3	FR	
-3	600-001-9/16		.	STAT-O-SEAL (WFRC) (83259)						3	FR	
-4	AN526-428R14		.	SCREW						2	FR	
-5	209-63004		.	BUSHING, Inboard pylon attaching						1	FR	
-6	AN6227B12		.	PACKING						3	FR	
	---*---											
-7	AN520-10R8		.	.	SCREW					4	FR	
-8	2W18-10M		.	.	WASHER, Flat (NA) (89372)					4	FR	
-9	209-63350-11		.	.	SEAL, BL 48 adapter to pylon launcher assembly (reidentified as 209-63350-21 when service change is incorporated)					1	FR	524
	209-63350-21		.	.	SEAL, BL 48 adapter to pylon and launcher assembly of (supersedes 209-63350-11 and 209-63250 for future procurement)					1	FR	
-10	AN365-428		.	.	NUT					4	FR	
-11	2W18-416M		.	.	WASHER, Flat (NA) (89372)					4	FR	
-12	7S15-416-11		.	.	SCREW, 100° flush head (NA) (89372)					4	FR	
-13	52-1065-02		.	.	NUT, Flush (EN) (72962)					11	FR	
-14	7S15-10-47		.	.	SCREW, 100° flush head (NA) (89372)					11	FR	
-15	7S15-416-9		.	.	SCREW, 100° flush head (NA) (89372)					4	FR	
	209-63216-1		.	.	FAIRING ASSEMBLY, BL 48 pylon LH					1	FR	
	209-63216-2		.	.	FAIRING ASSEMBLY, BL 48 pylon RH					1	KX	526
	209-63216-102		.	.	FAIRING ASSEMBLY, BL 48 pylon RH (used on 63210-102 pylon)					1	FR	
-16	209-63216-3		.	.	.	FAIRING, BL 48 pylon fairing assembly LH				1	FR	
	209-63216-4		.	.	.	FAIRING, BL 48 pylon fairing assembly RH				1	FR	
-17	209-63216-51		.	.	.	SEAL, BL 48 pylon fairing assembly				1	FR	
-18	209-63216-47		.	.	.	SEAL, BL 48 pylon fairing assembly (outboard)				1	FR	
	209-63216-49		.	.	.	SEAL, BL 48 pylon fairing assembly (inboard)				1	FR	
-19	209-63216-43		.	.	.	SEAL, BL 48 pylon fairing assembly (outboard)				1	FR	
	209-63216-45		.	.	.	SEAL, BL 48 pylon fairing assembly (inboard)				1	FR	
-20	209-63216-5		.	.	.	FAIRING, BL 48 pylon fairing assembly LH				1	FR	
	209-63216-6		.	.	.	FAIRING, BL 48 pylon fairing assembly RH				1	FR	
-21	209-63216-81		.	.	.	FAIRING SUBASSEMBLY, BL 48 pylon RH				1	FR	
-22	209-63216-25		.	.	.	SEAL, BL 48 pylon fairing assembly				1	FR	
-23	209-63216-39		.	.	.	DOOR, BL 48 pylon fairing assembly				1	FR	
-24	H-5000-51-102		.	.	.	LATCH (HWL) (83014)				1	FR	
-25	H-4731		.	.	.	.	SPRING (HWL) (83014)			1	FR	
-26	H-4604-2		.	.	.	.	PIN (HWL) (83014)			1	FR	
-27	H-4604-3		.	.	.	.	PIN (HWL) (83014)			1	FR	
-28	H-4602		.	.	.	.	BOLT (HWL) (83014)			1	FR	
-29	H-4603		.	.	.	.	TRIGGER (HWL) (83014)			1	FR	
-30	209-63216-33		.	.	.	HINGE, BL 48 pylon fairing assembly				1	FR	
	AN253-12-156		.	.	.	PIN				1	FR	
-31	209-540152-11		.	.	.	HARNESS, Electrical control pod and pylon assembly of (used on 209-63216-102 fairing)				1	FR	
	ATTACHING PARTS											
	AN515-6R7		.	.	.	SCREW				4	FR	
	2W18-6L		.	.	.	WASHER, Flat (NA) (89372)				8	FR	
	AN365-632		.	.	.	NUT				4	FR	
	---*---											
-32	209-63216-70		.	.	.	BRACKET, BL 48 pylon fairing assembly				1	FR	
-33	AN7510-1		.	.	.	PLATE, Identification and modification				1	FR	
	209-63211-11		.	.	ADAPTER ASSEMBLY, BL 48 pylon LH (superseded by 209-63211-21 for future procurement)					1	FR	
	209-63211-21		.	.	ADAPTER ASSEMBLY, BL 48 pylon LH (supersedes 209-63211-11 for future procurement)					1	FR	
	209-63211-12		.	.	ADAPTER ASSEMBLY, BL 48 pylon RH					1	FR	
-34	NAS51-37		.	.	.	RING				2	FR	
-35	209-63098		.	.	.	PIN, Insert anchor adapter beam				2	FR	
-36	209-63215		.	.	.	INSERT, Adapter BL 48 pylon				2	FR	
-37	209-63004		.	.	.	BUSHING, Inboard pylon attaching				2	FR	
-38	RL24SB-7		.	.	.	RING (ROSN) (83324)				3	FR	
-39	RD205SB-5.5L		.	.	.	INSERT (ROSN) (83324)				3	FR	
-40	3591-6CNx-9/16		.	.	.	INSERT, Heli-coil (AF) (91767) (LH only)				4	FR	
-41	1191-18CNx-1-1/8		.	.	.	INSERT, Heli-coil (AF) (91767)				1	FR	
-42	209-63211-3		.	.	.	HOUSING, BL 48 adapter pylon assembly LH				1	FR	
	209-63211-4		.	.	.	HOUSING, BL 48 adapter pylon assembly RH				1	FR	
-43	No Number		.	LAUNCHER ASSEMBLY, Bomb and rocket (Aero 15B or Aero 15C) (GFP)						1	FR	

NOTE: *1 Package 209-63202-11 re-identified as 209-63202-111 when Service Change No. 526 is incorporated

*2 Pylon 209-63210-2 re-identified as 209-63210-102 when Service Change No. 526 is incorporated

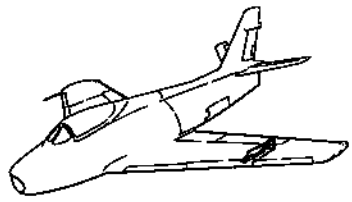

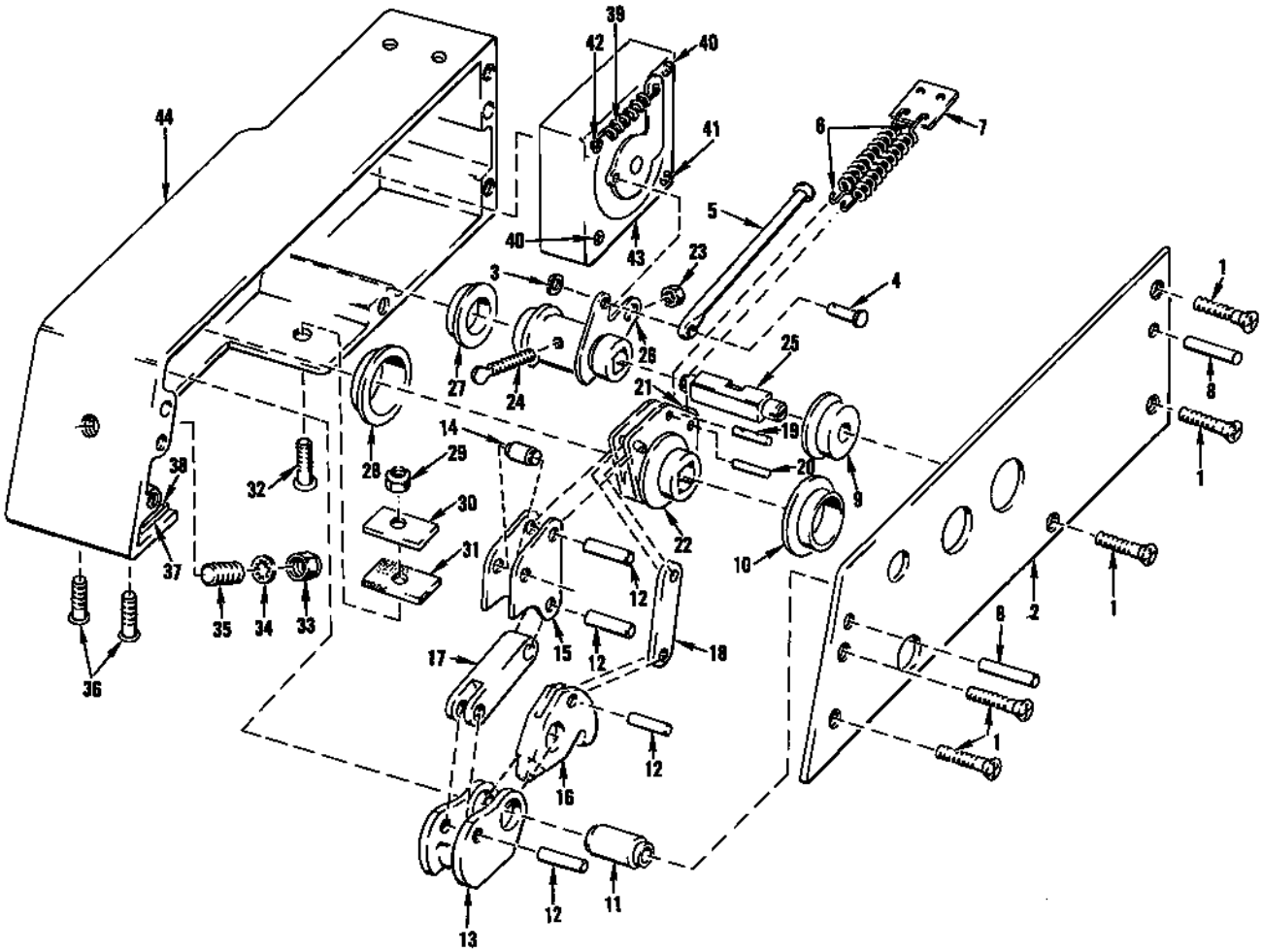

FJ-4/B-4-89-4

FIGURE 341 - 200 GALLON FUEL TANK PYLON REAR POST RELEASE BL 105

200 GALLON FUEL TANK PYLON REAR POST RELEASE BL 105

FIGURE & INDEX NO.	PART NUMBER	1 2 3 4 5 6 7	NOMENCLATURE	UNITS PER ASSY.	USABLE ON CODE	S/C NO.
341	209-48227-11		MECHANISM ASSEMBLY, Fuel tank rear post release (supersedes 209-48227 --- and superseded by 209-48227-21 and 209-48227-41 for future procurement)	1	LE	511
	209-48227-21		MECHANISM ASSEMBLY, Fuel tank rear post release (supersedes 209-48227-11 and superseded by 209-48227-41 for future procurement)	1	KY	511
	209-48227-31		MECHANISM ASSEMBLY, Fuel tank rear post release (added by Service -------- Change No. 511) (superseded by 209-48227-41 for future procurement)	1		
	209-48227-41		MECHANISM ASSEMBLY, Fuel tank rear post release (supersedes 209-48227-11, -21, and 209-48227-31 for future procurement)	1		
	209-48227-41		MECHANISM ASSEMBLY, Fuel tank rear post release (supersedes 209-48227-11 and -21 for future procurement) (see figure 339 for next assembly)	1	KY	
-1	7S13-632-4A	.	SCREW, 100° flush head corrosion-resistant (NA) (89372)----------	5		
-2	209-48229	.	FRAME, Fuel tank release mechanism upper ----------	1		
-3	2W17-4L	.	WASHER, Corrosion-resistant steel (NA) (89372) ----------	1		
-4	AN392-13	.	PIN ----------	1		
-5	209-48245	.	PLUNGER, Fuel tank release mechanism ----------	1		
-6	209-482105	.	SPRING, Tension ----------	2		
-7	209-48266	.	ANCHOR PLATE, Fuel tank release mechanism spring ----------	1		
-8	2P9-7-16	.	PIN, Press fit (NA) (89372) ----------	2		
-9	209-48387-11	.	BUSHING, Fuel tank release mechanism upper and lower sear ---------- (supersedes 209-48387 for future procurement)	1		
-10	209-48388	.	BUSHING, Fuel tank release mechanism upper rocker ----------	1		
-11	209-48385-5	.	BUSHING, Fuel tank release mechanism jaw (supersedes 209-48385--------- for future procurement)	1		
-12	179-48329-13	.	PIN, Fuel tank release mechanism (supersedes 179-48329 for future -------- procurement)	4		
-13	209-48219-13	.	JAW, Fuel tank release mechanism female (supersedes 209-48219 for------- future procurement)	1		
-14	209-48386-13	.	BUSHING, Fuel tank release mechanism fitting (supersedes 209-48386 ------ for future procurement)	1		
-15	209-48274-15	.	FITTING, Fuel tank release mechanism link connecting (supersedes -------- 209-48274-13 for future procurement)	1		
-16	209-48218-13	.	JAW, Fuel tank release mechanism male (supersedes 209-48218 for -------- future procurement)	1		
-17	181-48277-15	.	LINK, Fuel tank release mechanism female jaw (supersedes 181-48277-13--- for future procurement)	1		
-18	181-48228-15	.	LINK, Fuel tank release mechanism male jaw (supersedes 181-48228-13----- for future procurement)	1		
-19	209-48268	.	PIN, Fuel tank release mechanism release spring----------	1		
	209-48380-11	.	ROCKER ASSEMBLY, Fuel tank release mechanism (supersedes ---------- 209-48380 for future procurement)	1		
-20	209-48214-3	. .	PIN, Fuel tank mechanism release rocker roller ----------	1		
-21	209-483140	*1 . .	BEARING ASSEMBLY, Fuel tank release mechanism----------	1		
	B-55	. . .	BEARING (TOR) (60380) ----------	1		
	209-483141	*1 . .	RACE, Fuel tank release mechanism inner ----------	1		
-22	209-48244-7	. .	ROCKER, Fuel tank release mechanism (supersedes 209-48244-3 for --- future procurement)	1		
	209-483134-11		SEAR ASSEMBLY, Fuel tank rear post release mechanism assembly ------- (supersedes 209-483134 for future procurement)	1		
	209-48227-7	.	SEAR ASSEMBLY, Fuel tank rear post release mechanism assembly ------- (supersedes 209-483134-11 for future procurement) (make from 209-483134-21) (on 209-48227-21 only)	1		
	209-48227-9	.	SEAR ASSEMBLY, Fuel tank rear post release mechanism assembly ------- (make from 209-483134-31) (on 209-48227-41 only)	1		
-23	AN316C4R	. .	NUT----------	1		
-24	209-483136	. .	ARM, Fuel tank release mechanism sear----------	1		
	209-483136-3	. .	ARM, Fuel tank release mechanism sear (supersedes 209-483136 for --- future procurement)	1		
-25	209-483142	. .	PIN, Adjustment fuel tank release mechanism sear (supersedes -------- 209-483135 for future procurement)	1		
-26	209-48230-7	. .	SEAR, Fuel tank release mechanism ----------	1		
-27	209-48387-11	.	BUSHING, Fuel tank release mechanism upper and lower sear ---------- (supersedes 209-48387 for future procurement)	1		
-28	209-48388	.	BUSHING, Fuel tank release mechanism lower rocker ----------	1		
-29	AN365-632	.	NUT----------	1		
-30	209-48384-1	.	PLATE, Fuel tank release mechanism wiper ----------	1		
-31	209-48390-1	.	WIPER, Fuel tank release mechanism felt----------	1		
-32	7S13-632-12A	.	SCREW, 100° flush head corrosion-resistant (NA) (89372)----------	1		
-33	AN364-1032	.	NUT----------	1		
-34	AN96B10	.	WASHER----------	1		
-35	AN565F1032H10	.	SETSCREW ----------	1		
-36	7S13-632-7A	.	SCREW, 100° flush head corrosion-resistant (NA) (89372) ----------	2		
-37	209-48390-3	.	WIPER, Fuel tank release mechanism felt ----------	1		
-38	209-48384-3	.	PLATE, Fuel tank release mechanism wiper ----------	1		
-39	209-48232	.	SPRING, Tension (use on 209-48227-21, 209-48227-11 and 209-48227)-------	1		
	209-48232-3	.	SPRING, Tension (used on 209-48227-41 and 209-48227-31) ----------	1		
-40	NAS220-9	.	SCREW ----------	2		
	2W18-8M	.	WASHER, Flat (NA) (89372)----------	4		
	AN365-832	.	NUT----------	2		
-41	NAS220-9	.	SCREW ----------	1		
	2W18-8M	.	WASHER, Flat (NA) (89372)----------	1		
	AN365-832	.	NUT----------	1		
-42	NAS220-9	.	SCREW ----------	1		

200 GALLON FUEL TANK PYLON REAR POST RELEASE BL 105

FIGURE & INDEX NO.	PART NUMBER	1	2	3	4	5	6	7	NOMENCLATURE	UNITS PER ASSY.	USABLE ON CODE	S/C NO.
341	2W18-8M	.							WASHER, Flat (NA) (89372)	1		
	209-48231	.							RETAINER, Fuel tank release mechanism spring	1		
-43	B-61447-A	.							SOLENOID ASSEMBLY, (LGHI) (81840) (used on 209-48227, 209-48227-11 and 209-48227-21)	1		
	B-63952-001	.							SOLENOID ASSEMBLY, (LGHI) (81840) (used on 209-48227-41 and 209-48227 31)	1		
-44	209-48228	.							FRAME, Fuel tank release mechanism lower	1		

NOTE: *1 209-483140 together with 209-483141 supersedes 209-483139 for future procurement

EXTERNAL STORES CABLE STOWAGE FAIRING AND MOUNTING POINT PLUGS

FIGURE & INDEX NO.	PART NUMBER	1 2 3 4 5 6 7 NOMENCLATURE	UNITS PER ASSY.	USABLE ON CODE	S/C NO.
342-1	209-63063-51	PLUG ASSEMBLY, Pylon mounting point sealing	3	FR	
-2	AN6227B12	PACKING	3	FR	
-3	209-63342-7	SEAL, Cable stowage fairing	1	FR	
-4	2W18-916M	WASHER, Flat (NA) (89372)	1	FR	
-5	No Number	CAP SCREW, Socket head (PK) (45722) (9/16 diameter 18 threads x 1-1/4 inch long)	1	FR	
-6	AN520-416R14	SCREW	2	FR	
-7	2W18-416M	WASHER, Flat (NA) (89372)	2	FR	
	209-63217-1	FAIRING ASSEMBLY, BL 48 electrical LH	1	FR	
	209-63217-2	FAIRING ASSEMBLY, BL 48 electrical RH	1	KX	525
	209-63217-22	FAIRING ASSEMBLY, BL 48 electrical RH	1	KY	
-8	209-63217-11	. FAIRING SUBASSEMBLY, BL 48 electrical LH	1	FR	
	209-63217-12	. FAIRING SUBASSEMBLY, BL 48 electrical RH	1	FR	
-9	209-63217-7	. . SEAL, BL 48 electrical fairing subassembly (make from 209-963245 x 43)	1	FR	
-10	AN509-10R8	. SCREW	1	FR	
-11	209-63236-1	. BRACKET ASSEMBLY, BL 48 fairing adapter LH	1	FR	
	209-63236-2	. BRACKET ASSEMBLY, BL 48 fairing adapter RH	1	FR	
-12	209-63230	. BRACKET, Fairing adapter BP48	1	FR	
-13	2C15	. CLIP (NA) (89372)	1	FR	
-14	209-68235	. BRACKET ASSEMBLY, Cable stowage fairing	1	KY	
	2182-7	. . CONNECTOR (CED) (71468)	1	KY	
-15	209-63063-61	PLUG ASSEMBLY, Pylon mounting point sealing	1		
-16	AN6227B13	PACKING	1		
-17	209-63063-51	PLUG ASSEMBLY, Pylon mounting point sealing	3		
-18	AN6227B12	PACKING	3		
-19	209-63063-51	PLUG ASSEMBLY, Pylon mounting point sealing	1	FR	
-20	AN6227B12	PACKING	1	FR	
-21	209-63342-7	SEAL, Cable stowage fairing	1	FR	
-22	2W18-916M	WASHER, Flat (NA) (89372)	1	FR	
-23	No Number	CAP SCREW, Socket head (PK) (45722) (9/16 diameter 18 threads x 1-1/4 inch long)	1	FR	
-24	AN509-10R14	SCREW	2	FR	
	209-63249-1	FAIRING ASSEMBLY, BL 105 cable stowage LH	1	FR	
	209-63249-2	FAIRING ASSEMBLY, BL 105 cable stowage RH	1	FR	
-25	209-63249-31	. FAIRING SUBASSEMBLY, BL 105 cable stowage LH	1	FR	
	209-63249-32	. FAIRING SUBASSEMBLY, BL 105 cable stowage RH	1	FR	
-26	209-63249-13	. . SEAL, BL 105 cable stowage fairing subassembly (make from 209-963245 x 55)	1	FR	
-27	MS21919-DG23	. CLAMP	1	FR	
	ATTACHING PARTS				
	AN507-10R6	. SCREW	1	FR	
	2W18-10	. WASHER, Flat (NA) (89372)	1	FR	
	AN365-1032	. NUT	1	FR	
	2W18-416	. WASHER, Flat (NA) (89372)	1	FR	
	AN315-3R	. NUT	1	FR	
	---*---				
-28	MS21919-DG30	. CLAMP (LH only)	1	FR	
	MS21919-DG26	. CLAMP (RH only)	1	FR	
	ATTACHING PARTS				
	AN507-10R6	. SCREW	1	FR	
	2W18-10	. WASHER, Flat (NA) (89372)	1	FR	
	AN365-1032	. NUT	1	FR	
	2W18-416	. WASHER, Flat (NA) (89372)	1	FR	
	AN315-3R	. NUT	1	FR	
	---*---				
-29	MS21919-DG34	. CLAMP (LH only)	1	FR	
	ATTACHING PARTS				
	AN507-10R6	. SCREW	1	FR	
	2W18-10	. WASHER, Flat (NA) (89372)	1	FR	
	AN365-1032	. NUT	1	FR	
	2W18-416	. WASHER, Flat (NA) (89372)	1	FR	
	AN315-3R	. NUT	1	FR	
	---*---				
-30	209-63231	. BRACKET, BL 105 cable stowage	1	FR	
-31	2C15	. CLIP	1	FR	
-32	AN509-10R8	. SCREW	2	FR	
-33	209-63257-1	. FITTING ASSEMBLY, BL 105 cable stowage fairing LH	1	FR	
	209-63257-2	. FITTING ASSEMBLY, BL 105 cable stowage fairing RH	1	FR	
-34	209-63063-31	PLUG ASSEMBLY, Pylon mounting point sealing	1		
-35	AN6227B10	PACKING	1		
-36	209-63063-41	PLUG ASSEMBLY, Pylon mounting point sealing	2		
-37	AN6227B11	PACKING	2		
-38	209-63063-41	PLUG ASSEMBLY, Pylon mounting point sealing	1	FR	
-39	AN6227B11	PACKING	1	FR	
-40	209-63342-5	SEAL, Cable stowage fairing	1	FR	
-41	2W18-816	WASHER, Flat (NA) (89372)	1	FR	
-42	No Number	CAP SCREW, Socket head (PK) (45722) (1/2 dia. 20 threads x 1-1/4 inch long)	1	FR	
-43	AN509-10R14	SCREW	2	FR	
	209-63220-1	FAIRING ASSEMBLY, BL 153 cable stowage LH	1	FR	
	209-63220-2	FAIRING ASSEMBLY, BL 153 cable stowage RH	1	FR	
-44	209-63220-31	. FAIRING SUBASSEMBLY, BL 153 cable stowage LH	1	FR	
	209-63220-32	. FAIRING SUBASSEMBLY, BL 153 cable stowage RH	1	FR	

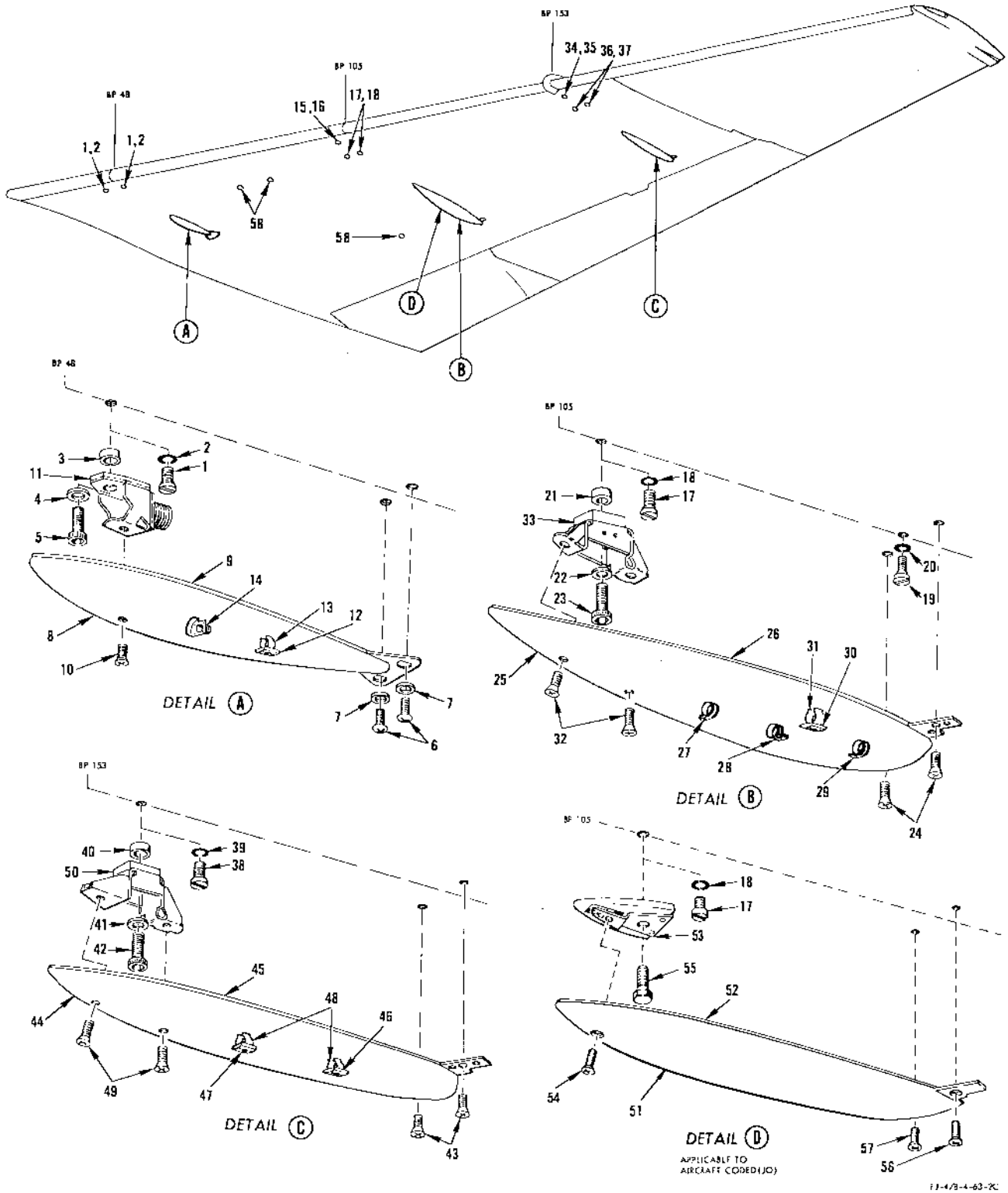

FIGURE 342 - EXTERNAL STORES CABLE STOWAGE FAIRING AND MOUNTING POINT PLUGS

EXTERNAL STORES CABLE STOWAGE FAIRING AND MOUNTING POINT PLUGS

FIGURE & INDEX NO.	PART NUMBER	1 2 3 4 5 6 7 NOMENCLATURE	UNITS PER ASSY.	USABLE ON CODE	S/C NO.
342-45	209-63220-15	. . SEAL, BL 153 cable stowage fairing subassembly (make from 209-963245 x 50)	1	FR	
-46	209-63230	. BRACKET, BL 153 cable stowage (LH only)	1	FR	
-47	209-63239	. BRACKET, BL 153 cable stowage (RH only)	1	FR	
-48	2C15	. CLIP	2	FR	
-49	AN509-10R8	. SCREW	2	FR	
-50	209-63233-1	. FITTING ASSEMBLY, BL 153 cable stowage fairing LH	1	FR	
	209-63233-2	. FITTING ASSEMBLY, BL 153 cable stowage fairing RH	1	FR	
	209-89854	ADAPTER BEAM PACKAGE, 200 gallon fuel tank (see figure 338 for complete breakdown)	1	FR	
-51	209-63154	. FAIRING ASSEMBLY, BL 105 cable stowage (LH only)	1	JQ	
	209-63154-7	. . SEAL, BL 105 cable stowage fairing assembly (RH side of 209-63154)	1	JQ	
-52	209-63154-9	. . SEAL, BL 105 cable stowage fairing assembly (LH side of 209-63154)	1	JQ	
-53	209-63154-17	. . BLOCK, BL 105 cable stowage fairing assembly	1	JQ	
-54	AN509-10R9	. . SCREW	1	JQ	
-55	AN9-11	BOLT	1	ET	
-56	AN509-10R9	SCREW	1	ET	
-57	AN509-10R8	SCREW	1	ET	
-58	209-14329	PLUG, In-flight refueling probe attach	3	FR	

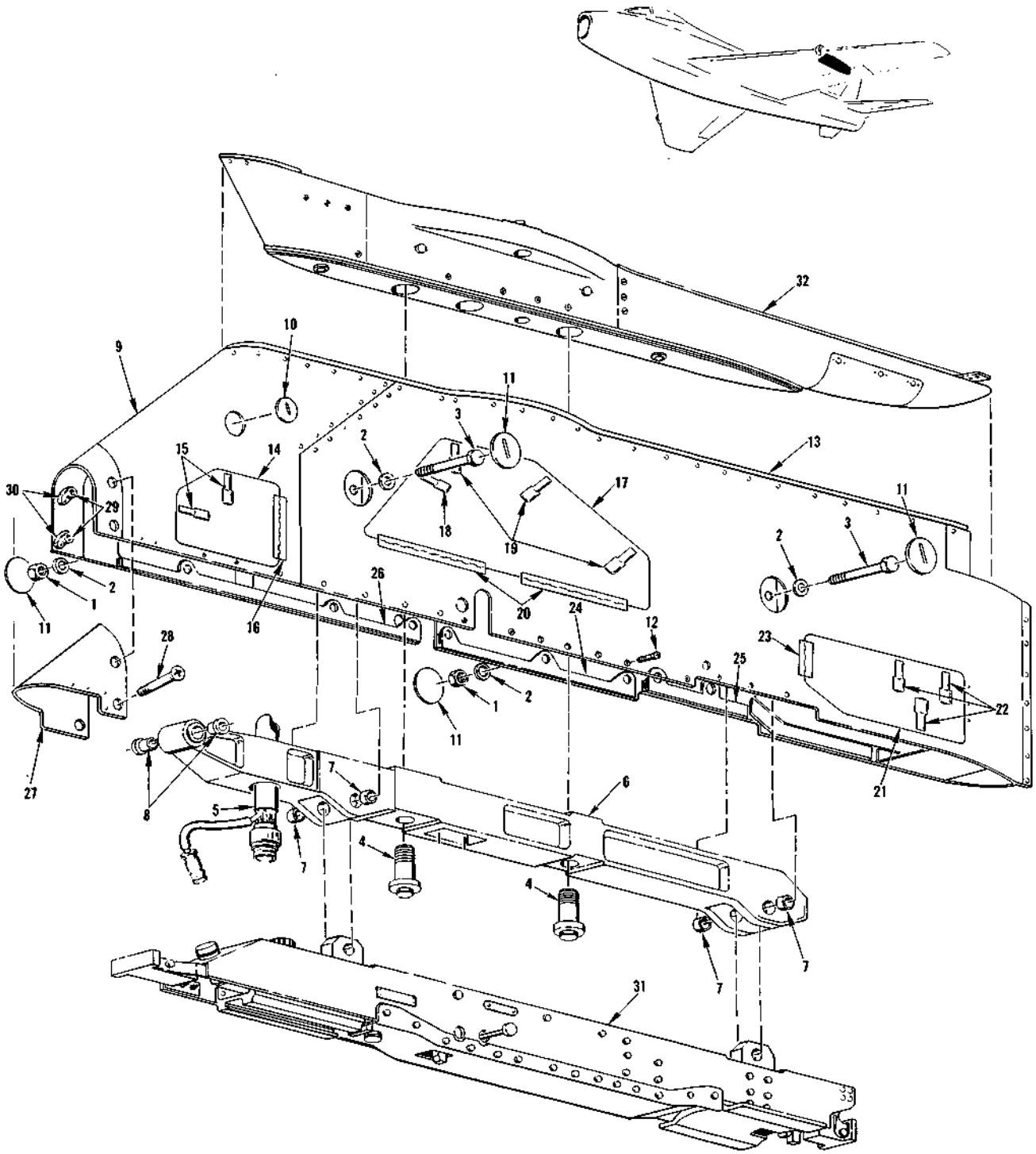

FIGURE 343 - BULLPUP EXTERNAL STORES PROVISION PACKAGE AT BL 153 - APPLICABLE TO AIRCRAFT CODED (KY)

BULLPUP EXTERNAL STORES PROVISION PACKAGE AT BL 153 - APPLICABLE TO AIRCRAFT CODED (KY)

FIGURE & INDEX NO.	PART NUMBER	1	2	3	4	5	6	7	NOMENCLATURE	UNITS PER ASSY.	USABLE ON CODE	S/C NO.
343	209-630202-371	*1	PACKAGE, Provision for external stores (Package Nos. H-006 and subsequent) --							1	KY	
	209-68212-11		.	PYLON ASSEMBLY, BL 153 Bullpup LH (supersedes 209-68212-1 for future procurement) ------						1	KY	
	209-68212-12		.	PYLON ASSEMBLY, BL 153 Bullpup RH (supersedes 209-68212-2 for future procurement) ------						1	KY	
-1	AN364-1216		.	.	NUT					2	KY	
-2	2W18-1216M		.	.	WASHER, Flat (NA) (89372)					4	KY	
-3	NAS464P12A43		.	.	BOLT					2	KY	
-4	209-68215		.	.	BOLT, Pylon attaching (magnetic inspected)					2	KY	
	AN520-10R10		.	.	SCREW					2	KY	
-5	244-54311		.	.	HARNESS ASSEMBLY, Electric Bullpup pylon (used on 209-68212-11 pylon)					1	KY	
	244-54311-22		.	.	HARNESS ASSEMBLY, Electrical Bullpup pylon (used on 209-68212-12 -- pylon)					1	KY	
	ATTACHING PARTS											
	AN742D12		.	.	CLAMP					2	KY	
	AN520-10R12		.	.	SCREW					2	KY	
	AN365-1032		.	.	NUT					2	KY	
	2W18-10M		.	.	WASHER, Flat (NA) (89372)					4	KY	
	2W1AL-14-14-32		.	.	WASHER, Plain (NA) (89372)					1	KY	
	AN7510-2		.	.	NAMEPLATE					1	KY	
-6	209-68211-11		.	.	BEAM ASSEMBLY, Bullpup pylon					1	KY	
-7	4B19-B12-016		.	.	. BUSHING, Press fit plain (NA) (89372)					4	KY	
-8	4B20-B12-016		.	.	. BUSHING, Press fit flanged (NA) (89372)					2	KY	
-9	209-68217-101		.	.	FAIRING ASSEMBLY, BL 153 Bullpup pylon LH (supersedes 209-68217-1 for future procurement)					1	KY	
	209-68217-102		.	.	FAIRING ASSEMBLY, BL 153 Bullpup pylon RH (supersedes 209-68217-2 for future procurement)					1	KY	
-10	H-8700-74-7		.	.	. DOOR ASSEMBLY, Rotary access (HWL) (83014)					2	KY	
-11	H-8708-1		.	.	. DOOR ASSEMBLY, Rotary access (HWL) (83014)					4	KY	
-12	AN509-10R6		.	.	. SCREW					36	KY	
-13	209-68217-67		.	.	. SEAL, BL 153 Bullpup pylon fairing assembly					1	KY	
-14	244-68212-1		.	.	. DOOR ASSEMBLY, Forward BL 153 Bullpup pylon fairing assembly LH (outboard on 209-68217-101 and inboard on 209-68217-102)					1	KY	
	244-68212-2		.	.	. DOOR ASSEMBLY, Forward BL 153 Bullpup pylon fairing assembly RH (inboard on 209-68217-101 and outboard on 209-68217-102)					1	KY	
-15	H-5000-.072-.142		.	.	. . LATCH (HWL) (83014)					2	KY	
-16	H6300S4.5-.072-.135		.	.	. . HINGE (HWL) (83014)					1	KY	
-17	244-68213-1		.	.	. DOOR ASSEMBLY, Intermediate BL 153 Bullpup pylon fairing assembly LH (outboard only on 209-68217-101)					1	KY	
	244-68213-2		.	.	. DOOR ASSEMBLY, Intermediate BL 153 Bullpup pylon fairing assembly RH (outboard only on 209-68217-102)					1	KY	
-18	H-5000-.072-.156		.	.	. . LATCH (HWL) (83014)					1	KY	
-19	H-5000-.072-.179		.	.	. . LATCH (HWL) (83014)					3	KY	
-20	H6300S6.0-.072-.156		.	.	. . HINGE (HWL) (83014)					2	KY	
-21	209-68217-107		.	.	. DOOR, Aft BL 153 Bullpup pylon fairing assembly LH (outboard on 209-68217-101 and inboard on 209-68217-102)					1	KY	
	209-68217-108		.	.	. DOOR, Aft BL 153 Bullpup pylon fairing assembly, LH (inboard on 209-68217-101 and outboard on 209-68217-102)					1	KY	
-22	H-5000-.072-.156		.	.	. LATCH (HWL) (83014)					6	KY	
-23	H6300S3-.072-.072		.	.	. HINGE (HWL) (83014)					2	KY	
-24	244-68214-2		.	.	. CHANNEL ASSEMBLY, RH center Bullpup pylon fairing assembly -- (inboard LH and outboard RH)					1	KY	
	244-68214-1		.	.	. CHANNEL ASSEMBLY, LH center Bullpup pylon fairing assembly -- (outboard LH and inboard RH)					1	KY	
-25	244-68215-2		.	.	. CHANNEL ASSEMBLY, RH aft Bullpup pylon fairing assembly (inboard LH and outboard RH)					1	KY	
	244-68215-1		.	.	. CHANNEL ASSEMBLY, LH aft Bullpup pylon fairing assembly (outboard LH and inboard RH)					1	KY	
-26	244-68216-2		.	.	. CHANNEL ASSEMBLY, RH forward Bullpup pylon fairing assembly - (inboard LH and outboard RH)					1	KY	
	244-68216-1		.	.	. CHANNEL ASSEMBLY, LH forward Bullpup pylon fairing assembly - (outboard LH and inboard RH)					1	KY	
-27	209-68217-121		.	.	. FAIRING SUBASSEMBLY, Skin BL 153 Bullpup pylon LH					1	KY	
-28	AN509-416-8RH		.	.	. SCREW					4	KY	
-29	F5000-428		.	.	. NUT PLATE (KNM) (75237)					4	KY	
-30	NAS463X-DD416H		.	.	. SHIM, Anchornut					4	KY	
-31	No Number		LAUNCHER ASSEMBLY, Missile (Aero 5A) (GFP)							1	KY	
-32	209-63312-1		BEAM ASSEMBLY, BL 153 adapter LH (see figure 337 for breakdown)							1	KY	
	209-63312-2		BEAM ASSEMBLY, BL 153 adapter RH (see figure 337 for breakdown)							1	KY	

NOTE: *1 Applicable to aircraft coded (KX) with Service Change No. 525 incorporated

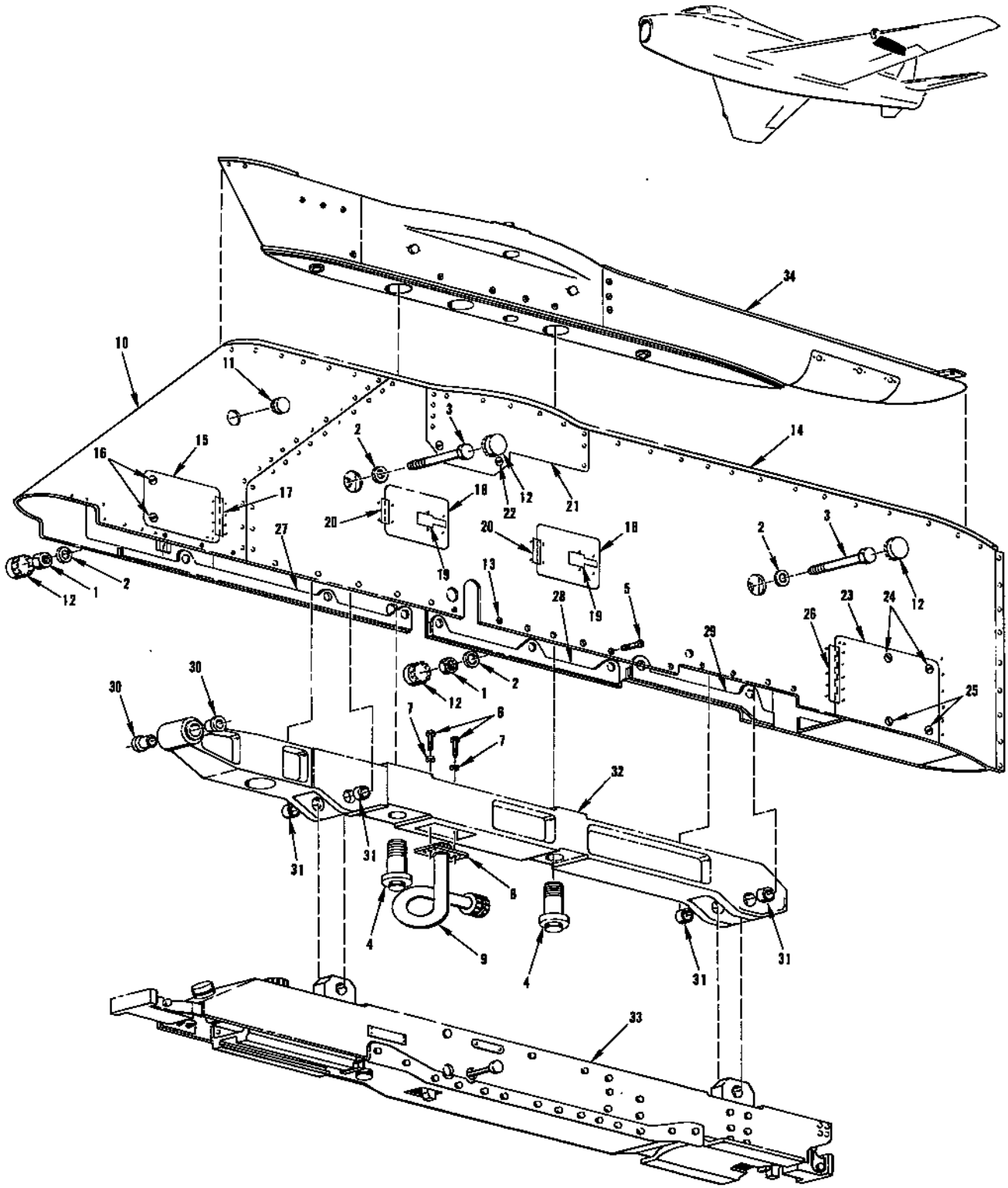

FIGURE 344 - MISSILE PYLON AND ADAPTER COMBINATION AT BL 153 - APPLICABLE TO AIRCRAFT CODED (KY)

MISSILE PYLON AND ADAPTER COMBINATION AT BL 153 - APPLICABLE TO AIRCRAFT CODED (KY)

FIGURE & INDEX NO.	PART NUMBER	1 2 3 4 5 6 7 NOMENCLATURE	UNITS PER ASSY.	USABLE ON CODE	S/C NO.
344	209-63202-71	*1 PACKAGE, Provision for external stores (see figures 345, 346 and 347 for additional breakdown) (package unit nos. H-001 through H-005)	1	KY	
	209-68212-1	. PYLON ASSEMBLY, BL 153 LH (superseded by 209-68212-11 for future procurement)	1	KY	
	209-68212-2	. PYLON ASSEMBLY, BL 153 RH (superseded by 209-68212-12 for future procurement)	1	KY	
-1	AN364-1216	. . NUT	2	KY	
-2	2W18-1216	. . WASHER, Flat (NA) (89372)	4	KY	
-3	AN12-31A	. . BOLT	2	KY	
-4	209-68215	. . BOLT, Pylon attaching (magnetic inspected)	2	KY	
-5	AN509-10R6	. . SCREW	30	KY	
-6	AN520-10R10	. . SCREW	2	KY	
-7	2W18-10M	. . WASHER, Flat (NA) (89372)	2	KY	
-8	209-68219	. . SUPPORT, Pylon electrical plug assembly of	1	KY	
-9	209-540153-11	. . HARNESS, Electrical pylon assembly of	1	KY	
-10	209-68217-1	. . FAIRING ASSEMBLY, BL 153 pylon LH (superseded by 209-68217-101 for future procurement)	1	KY	
	209-68217-2	. . FAIRING ASSEMBLY, BL 153 pylon RH (superseded by 209-68217-102 for future procurement)	1	KY	
-11	48155	. . . PLUG BUTTON (UC) (61864)	2	KY	
-12	50841	. . . PLUG BUTTON (UC) (61864)	4	KY	
-13	AN509-10R6	. . . SCREW	12	KY	
-14	209-68217-67	. . . SEAL, BL 153 pylon fairing assembly	1	KY	
-15	209-68217-45	. . . DOOR, BL 153 pylon fairing assembly (outboard LH and inboard RH)	1	KY	
	209-68217-46	. . . DOOR, BL 153 pylon fairing assembly (inboard LH and outboard RH)	1	KY	
-16	UFT20	. . . STUD (DZ) (72794)	4	KY	
	GH5x-.662	. . . GROMMET (DZ) (72794)	4	KY	
	URF5	. . . RECEPTACLE (DZ) (72794)	4	KY	
-17	H-6300S-2.5-072-072	. . . HINGE (HWL) (83014)	1	KY	
-18	209-68217-27	. . . DOOR, BL 153 pylon fairing assembly (outboard side only)	2	KY	
-19	H-5000-072-132	. . . LATCH (HWL) (83014)	2	KY	
-20	H-6300S-1.875-072-072	. . HINGE (HWL) (83014)	2	KY	
-21	209-68217-51	. . . DOOR, BL 153 pylon fairing assembly (outboard side only)	1	KY	
-22	UFT20	. . . STUD (DZ) (72794)	2	KY	
	GH5x-.662	. . . GROMMET (DZ) (72794)	2	KY	
	URF5	. . . RECEPTACLE (DZ) (72794)	2	KY	
-23	209-68217-7	. . . DOOR, BL 153 pylon fairing assembly (outboard LH and inboard RH)	1	KY	
	209-68217-8	. . . DOOR, BL 153 pylon fairing assembly (inboard LH and outboard RH)	1	KY	
-24	UF5T20	. . . STUD (DZ) (72794)	4	KY	
-25	UF5T30	. . . STUD (DZ) (72794)	4	KY	
	GH5x-.662	. . . GROMMET (DZ) (72794)	8	KY	
	URF5	. . . RECEPTACLE (DZ) (72794)	8	KY	
-26	H-6300S-4-072-072	. . . HINGE (HWL) (83014)	2	KY	
	209-68217-23	. . . CHANNEL, BL 153 fairing assembly (outboard)	1	KY	
-27	209-68217-24	. . . CHANNEL, BL 153 fairing assembly (inboard)	1	KY	
	209-68217-21	. . . CHANNEL, BL 153 fairing assembly (outboard)	1	KY	
-28	209-68217-22	. . . CHANNEL, BL 153 fairing assembly (inboard)	1	KY	
	209-68217-17	. . . CHANNEL, BL 153 fairing assembly (outboard)	1	KY	
-29	209-68217-18	. . . CHANNEL, BL 153 fairing assembly (inboard)	1	KY	
	209-68211-11	. . BEAM ASSEMBLY, Pylon	1	KY	
-30	4B20B12-016	. . . BUSHING, Press fit flanged (NA) (89372)	2	KY	
-31	4B19B12-016	. . . BUSHING, Press fit plain (NA) (89372)	4	KY	
-32	209-68211-3	. . . HOUSING, Pylon beam assembly	1	KY	
-33	No Number	. . LAUNCHER ASSEMBLY, Missile (Aero 5A) (GFP)	1	KY	
-34	209-63312-1	BEAM ASSEMBLY, BL 153 adapter LH (see figure 337 for breakdown)	1	KY	
	209-63312-2	BEAM ASSEMBLY, BL 153 adapter RH (see figure 337 for breakdown)	1	KY	

NOTE: *1 Applicable to aircraft coded (KX) with Service Change No. 525 incorporated

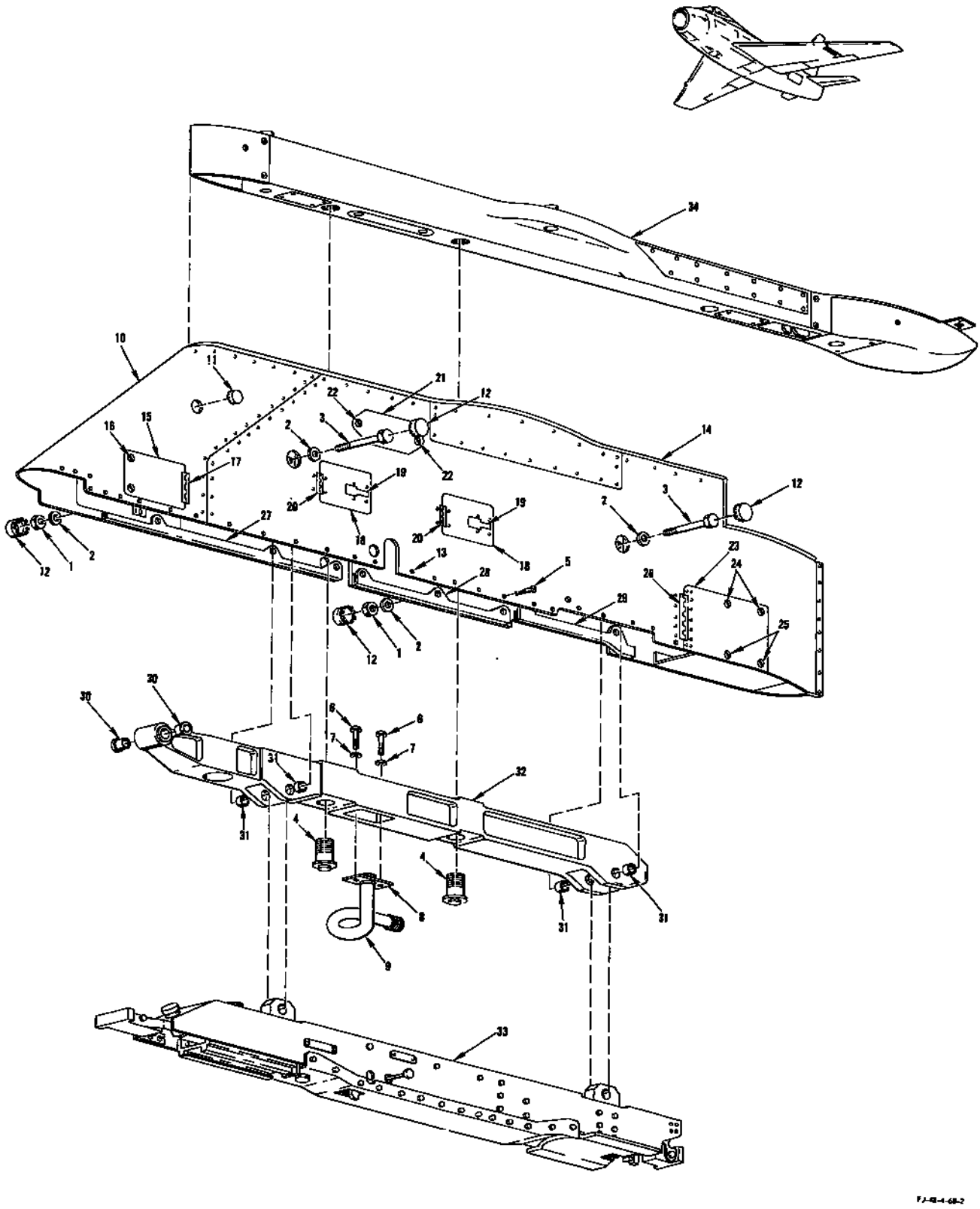

FIGURE 345 - MISSILE PYLON AND ADAPTER COMBINATION AT BL 105 - APPLICABLE TO AIRCRAFT CODED (KY)

MISSILE PYLON AND ADAPTER COMBINATION AT BL 105 - APPLICABLE TO AIRCRAFT CODED (KY)

FIGURE & INDEX NO.	PART NUMBER	1	2	3	4	5	6	7	NOMENCLATURE	UNITS PER ASSY.	USABLE ON CODE	S/C NO.
345	209-63202-71	*1	PACKAGE, Provision for external stores (see figures 344, 346 and 347 for additional breakdown)(package unit nos. H-001 through H-005)							1	KY	
	209-68213-1	.	PYLON ASSEMBLY, BL 105 LH (superseded by 209-68213-11 for future procurement)							1	KY	
	209-68213-2	.	PYLON ASSEMBLY, BL 105 RH (superseded by 209-68213-12 for future procurement)							1	KY	
-1	AN364-1216	.	.	NUT						2	KY	
-2	2W18-1216	.	.	WASHER, Flat (NA) (89372)						4	KY	
-3	NAS464P12A43	.	.	BOLT						2	KY	
-4	209-68215	.	.	BOLT, Pylon attaching (magnetic inspected)						2	KY	
-5	AN509-10R6	.	.	SCREW						30	KY	
-6	AN520-10R10	.	.	SCREW						2	KY	
-7	2W18-10M	.	.	WASHER, Flat (NA) (89372)						2	KY	
-8	209-68219	.	.	SUPPORT, Pylon electrical plug assembly of						1	KY	
-9	209-540153-11	.	.	HARNESS, Electrical pylon assembly of						1	KY	
-10	209-68218-1	.	.	FAIRING ASSEMBLY, BL 105 pylon LH (superseded by 209-68218-101 for future procurement)						1	KY	
	209-68218-2	.	.	FAIRING ASSEMBLY, BL 105 pylon RH (superseded by 209-68218-102 for future procurement)						1	KY	
-11	48155	.	.	.	PLUG BUTTON (UC) (61864)					2	KY	
-12	50841	.	.	.	PLUG BUTTON (UC) (61864)					4	KY	
-13	AN509-10R6	.	.	.	SCREW					12	KY	
-14	209-68218-23	.	.	.	SEAL, BL 105 pylon fairing assembly					1	KY	
-15	209-68218-75	.	.	.	DOOR, BL 105 pylon fairing assembly (outboard LH)					1	KY	
	209-68218-77	.	.	.	DOOR, BL 105 pylon fairing assembly (inboard LH)					1	KY	
	209-68218-76	.	.	.	DOOR, BL 105 pylon fairing assembly (outboard RH)					1	KY	
	209-68218-78	.	.	.	DOOR, BL 105 pylon fairing assembly (inboard RH)					1	KY	
-16	UFT20	.	.	.	STUD (DZ) (72794)					4	KY	
	GH5	.	.	.	GROMMET (DZ) (72794)					4	KY	
	URF-5	.	.	.	RECEPTACLE (DZ) (72794)					4	KY	
-17	H-6300S-2.5-072-072	.	.	.	HINGE (HWL) (83014)					2	KY	
-18	209-68218-43	.	.	.	DOOR, BL 105 pylon fairing assembly (outboard side only)					2	KY	
-19	H-5000-072-132	.	.	.	LATCH (HWL) (83014)					2	KY	
-20	H-6300S-1.875-072-072	.	.	.	HINGE (HWL) (83014)					2	KY	
-21	209-68218-53	.	.	.	DOOR, BL 105 pylon fairing assembly (outboard side only)					1	KY	
-22	UFT-20	.	.	.	STUD (DZ) (72794)					2	KY	
	GH5	.	.	.	GROMMET (DZ) (72794)					2	KY	
	URF-5	.	.	.	RECEPTACLE (DZ) (72794)					2	KY	
-23	209-68218-7	.	.	.	DOOR, BL 105 pylon fairing assembly (outboard LH inboard RH)					1	KY	
	209-68218-8	.	.	.	DOOR, BL 105 pylon fairing assembly (inboard LH outboard RH)					1	KY	
-24	UF5T20	.	.	.	STUD (DZ) (72794)					4	KY	
-25	UF5T30	.	.	.	STUD (DZ) (72794)					4	KY	
	GH5	.	.	.	GROMMET (DZ) (72794)					8	KY	
	URF-5	.	.	.	RECEPTACLE (DZ) (72794)					8	KY	
-26	H-6300S-4-072-072	.	.	.	HINGE (HWL) (83014)					2	KY	
	209-68218-59	.	.	.	CHANNEL, BL 105 pylon fairing assembly LH					1	KY	
-27	209-68218-60	.	.	.	CHANNEL, BL 105 pylon fairing assembly RH					1	KY	
	209-68218-35	.	.	.	CHANNEL, BL 105 pylon fairing assembly LH					1	KY	
-28	209-68218-36	.	.	.	CHANNEL, BL 105 pylon fairing assembly RH					1	KY	
	209-68218-33	.	.	.	CHANNEL, BL 105 pylon fairing assembly LH					1	KY	
-29	209-68218-34	.	.	.	CHANNEL, BL 105 pylon fairing assembly RH					1	KY	
	209-68211-11	.	.	BEAM ASSEMBLY, Pylon						1	KY	
-30	4B20B12-016	.	.	.	BUSHING, Press fit flanged (NA) (89372)					2	KY	
-31	4B19B12-016	.	.	.	BUSHING, Press fit plain (NA) (89372)					4	KY	
-32	209-68211-3	.	.	.	HOUSING, Pylon beam assembly					1	KY	
-33	No Number	.	.	LAUNCHER ASSEMBLY, Missile (Aero 5A)(GFP)						1	KY	
-34	209-63513-1		BEAM ASSEMBLY, BL 105 adapter LH (superseded by 209-63513-31 for future procurement) (see figure 339 for breakdown)							1	KX	511
	209-63513-31		BEAM ASSEMBLY, BL 105 adapter LH (supersedes 209-63513-1 and superseded by 209-63513-61 for future procurement)(see figure 339 for breakdown)							1	KY	511
	209-63513-51		BEAM ASSEMBLY, BL 105 adapter LH (superseded by 209-63513-61 for future procurement) (see figure 339 for breakdown)							1		
	209-63513-61		BEAM ASSEMBLY, BL 105 adapter LH (supersedes 209-63513-31 and 209-63513-51 for future procurement) (see figure 339 for breakdown)							1	KY	
	209-63513-2		BEAM ASSEMBLY, BL 105 adapter RH (superseded by 209-63513-32 for future procurement) (see figure 339 for breakdown)							1	KX	511
	209-63513-32		BEAM ASSEMBLY, BL 105 adapter RH (supersedes 209-63513-2 and superseded by 209-63513-62 for future procurement) (see figure 339 for breakdown)							1	KX	511
	209-63513-52		BEAM ASSEMBLY, BL 105 adapter RH (superseded by 209-63513-62 for future procurement) (see figure 339 for breakdown)							1		
	209-63513-62		BEAM ASSEMBLY, BL 105 adapter RH (supersedes 209-63513-32 and 209-63513-52 for future procurement) (see figure 339 for breakdown)							1	KY	

NOTE: *1 Applicable to aircraft coded (KX) with Service Change No. 525 incorporated

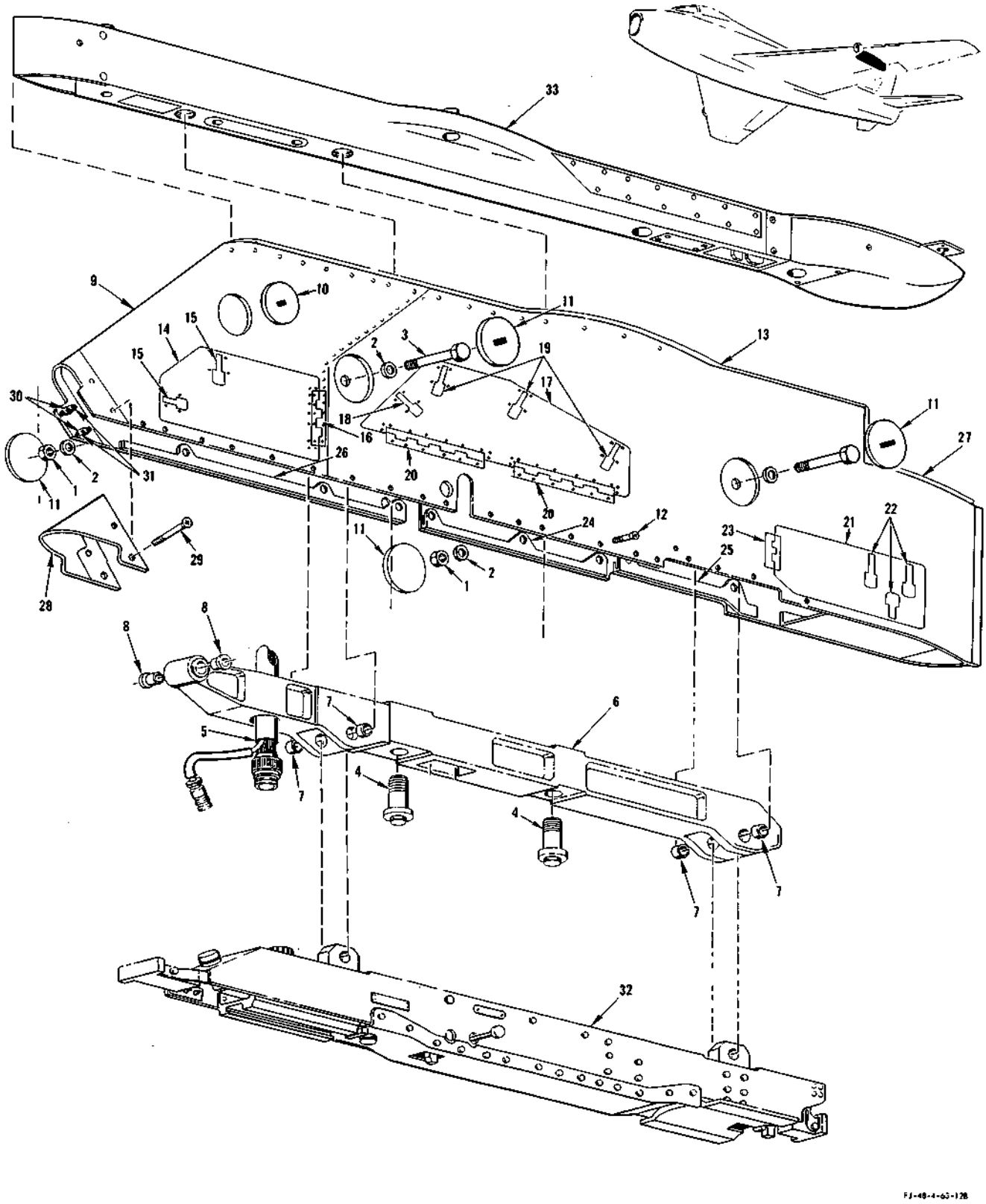

FIGURE 345A - BULLPUP EXTERNAL STORES PROVISION PACKAGE AT BL 105 - APPLICABLE TO AIRCRAFT CODED (KY)

BULLPUP EXTERNAL STORES PROVISION PACKAGE AT BL 105 - APPLICABLE TO AIRCRAFT CODED (KY)

FIGURE & INDEX NO.	PART NUMBER	1 2 3 4 5 6 7 NOMENCLATURE	UNITS PER ASSY.	USABLE ON CODE	S/C NO.
345A	209-63202-271	*1 PACKAGE, Provision for external stores (package unit nos. H-006 and subsequent)	1	KY	
	209-68213-11	. PYLON ASSEMBLY, BL 105 Bullpup LH (supersedes 209-68213-1 for future procurement)	1	KY	
	209-68213-12	. PYLON ASSEMBLY, BL 105 Bullpup RH (supersedes 209-68213-2 for future procurement)	1	KY	
-1	AN364-1216	. . NUT	2	KY	
-2	2W18-1216M	. . WASHER, Flat (NA) (89372)	4	KY	
-3	NAS464P12A43	. . BOLT	2	KY	
-4	209-68215	. . BOLT, Pylon attaching (magnetic inspected)	2	KY	
-5	244-54311	. . HARNESS, Electrical Bullpup pylon assembly of (used on 209-68213-11 pylon)	1	KY	
	244-54311-22	. . HARNESS, Electrical Bullpup pylon assembly of (used on 209-68213-12 pylon)	1	KY	
	ATTACHING PARTS				
	AN742D12	. . CLAMP	2	KY	
	AN520-10R12	. . SCREW	2	KY	
	AN365-1032	. . NUT	2	KY	
	2W18-10M	. . WASHER, Flat (NA) (89372)	4	KY	
	2W1AL-14-14-32	. . WASHER, Plain (NA) (89372)	1	KY	
	---+---				
	AN7510-2	. . NAMEPLATE	1	KY	
-6	209-68211-11	. . BEAM, Bullpup pylon assembly of	1	KY	
-7	4B19-B12-016	. . . BUSHING, Press fit plain (NA) (89372)	4	KY	
-8	4B20-B12-016	. . . BUSHING, Press fit flanged (NA) (89372)	2	KY	
-9	209-68218-101	. . FAIRING ASSEMBLY, BL 105, Bullpup pylon assembly, of LH (supersedes 209-68218-1 for future procurement)	1	KY	
	209-68218-102	. . FAIRING ASSEMBLY, BL 105, Bullpup pylon assembly of, RH (supersedes 209-68218-2 for future procurement)	1	KY	
-10	H8700-74-7	. . . DOOR ASSEMBLY, Rotary access (HWL) (83014)	2	KY	
-11	H8708-1	. . . DOOR ASSEMBLY, Rotary access (HWL) (83014)	4	KY	
-12	AN509-10R6	. . . SCREW	36	KY	
-13	209-68218-23	. . . SEAL, BL 105, Bullpup pylon fairing assembly	1	KY	
-14	244-68212-1	. . . DOOR ASSEMBLY, Forward BL 105, Bullpup pylon fairing assembly, LH (outboard on 209-68218-101 and inboard on 209-68218-102)	1	KY	
	244-68212-2	. . . DOOR ASSEMBLY, Forward BL 105, Bullpup pylon fairing assembly, LH (inboard on 209-68218-101 and inboard on 209-68218-102)	1	KY	
-15	H5000-.72-.142	. . . . LATCH (HWL) (83014)	2	KY	
-16	H6300S-4.5-.072-.135	. . . . HINGE (HWL) (83014)	1	KY	
-17	244-68213-1	. . . DOOR ASSEMBLY, Intermediate BL 105, Bullpup pylon fairing assembly, LH (outboard only on 209-68218-101)	1	KY	
	244-68213-2	. . . DOOR ASSEMBLY, Intermediate BL 105, Bullpup pylon fairing assembly, RH (outboard only on 209-68218-102)	1	KY	
-18	H5000-.072-.156	. . . . LATCH (HWL) (83014)	1	KY	
-19	H5000-.072-.179	. . . . LATCH (HWL) (83014)	3	KY	
-20	H6300S-6.0-.072-.156	. . . . HINGE (HWL) (83014)	2	KY	
-21	209-68218-107	. . . DOOR, Aft BL 105, Bullpup pylon fairing assembly, LH (outboard on 209-68218-101 and inboard on 209-68218-102)	1	KY	
	209-68218-108	. . . DOOR, Aft BL 105, Bullpup pylon fairing assembly, RH (inboard on 209-68218-101 and outboard on 209-68218-102)	1	KY	
-22	H5000-.072-.156	. . . LATCH (HWL) (83014)	6	KY	
-23	H6300S-3-.072-.072	. . . HINGE (HWL) (83014)	2	KY	
-24	244-68214-2	. . . CHANNEL ASSEMBLY, Center, Bullpup pylon fairing assembly, RH (inboard LH and outboard RH)	1	KY	
	244-68214-1	. . . CHANNEL ASSEMBLY, Center, Bullpup pylon fairing assembly, LH (outboard LH and inboard RH)	1	KY	
-25	244-68215-2	. . . CHANNEL ASSEMBLY, Aft, Bullpup pylon fairing assembly, RH (inboard LH and outboard RH)	1	KY	
	244-68215-1	. . . CHANNEL ASSEMBLY, Aft, Bullpup pylon fairing assembly, LH (outboard LH and inboard RH)	1	KY	
-26	244-68216-2	. . . CHANNEL ASSEMBLY, Forward, Bullpup pylon fairing assembly, RH (inboard LH and outboard RH)	1	KY	
	244-68216-1	. . . CHANNEL ASSEMBLY, Forward, Bullpup pylon fairing assembly, LH (outboard LH and inboard RH)	1	KY	
	244-68217-3	. . . BRACKET, Bullpup pylon	2	KY	
	244-68217-5	. . . BRACKET, Bullpup pylon	2	KY	
-27	209-68218-91	. . SEAL, Bullpup pylon subassembly of LH	1	KY	
	209-68218-92	. . SEAL, Bullpup pylon subassembly of RH	1	KY	
-28	209-68218-143	. . . FAIRING ASSEMBLY, BL 105, Bullpup pylon subassembly of, LH	1	KY	
	209-68218-144	. . . FAIRING ASSEMBLY, BL 105, Bullpup pylon subassembly of, RH	1	KY	
-29	AN509-416R11	. . SCREW	4	KY	
-30	F5000-428	. . NUT PLATE (KNM) (75237)	4	KY	
-31	NAS463X-DD416H	. . SHIM, Anchor nut	4	KY	
-32	No Number	LAUNCHER ASSEMBLY, Missile (Aero 5A) (GFP)	1	KY	
-33	209-63513-1	BEAM ASSEMBLY, BL 105 adapter LH (superseded by 209-63513-31 for future procurement) (see figure 339 for breakdown)	1	KX	511
	209-63513-31	BEAM ASSEMBLY, BL 105 adapter LH (supersedes 209-63513-1 and superseded by 209-63513-61 for future procurement) (see figure 339 for breakdown)	1	KY	511
	209-63513-51	BEAM ASSEMBLY, BL 105 adapter LH (superseded by 209-63513-61 for future procurement) (see figure 339 for breakdown)	1		
	209-63513-61	BEAM ASSEMBLY, BL 105 adapter LH (supersedes 209-63513-31 and 209-63513-51 for future procurement) (see figure 339 for breakdown)	1	KY	

BULLPUP EXTERNAL STORES PROVISION PACKAGE AT BL 105 - APPLICABLE TO AIRCRAFT CODED (KY)

FIGURE & INDEX NO.	PART NUMBER	1 2 3 4 5 6 7 NOMENCLATURE	UNITS PER ASSY.	USABLE ON CODE	S/C NO.
345A	209-63513-2	BEAM ASSEMBLY, BL 105 adapter RH (superseded by 209-63513-32 for future -- procurement) (see figure 339 for breakdown)	1	KX	511
	209-63513-32	BEAM ASSEMBLY, BL 105 adapter RH (supersedes 209-63513-2 and superseded - by 209-63513-62 for future procurement) (see figure 339 for breakdown)	1	KY	511
	209-63513-52	BEAM ASSEMBLY, BL 105 adapter RH (superseded by 209-63513-62 for -------- future procurement) (see figure 339 for breakdown)	1		
	209-63513-62	BEAM ASSEMBLY, BL 105 adapter RH (supersedes 209-63513-52 for ---------- future procurement) (see figure 339 for breakdown)	1	KY	

NOTE: *1 Applicable to aircraft coded (KX) with Service Change No. 525 incorporated

THIS PAGE LEFT BLANK INTENTIONALLY

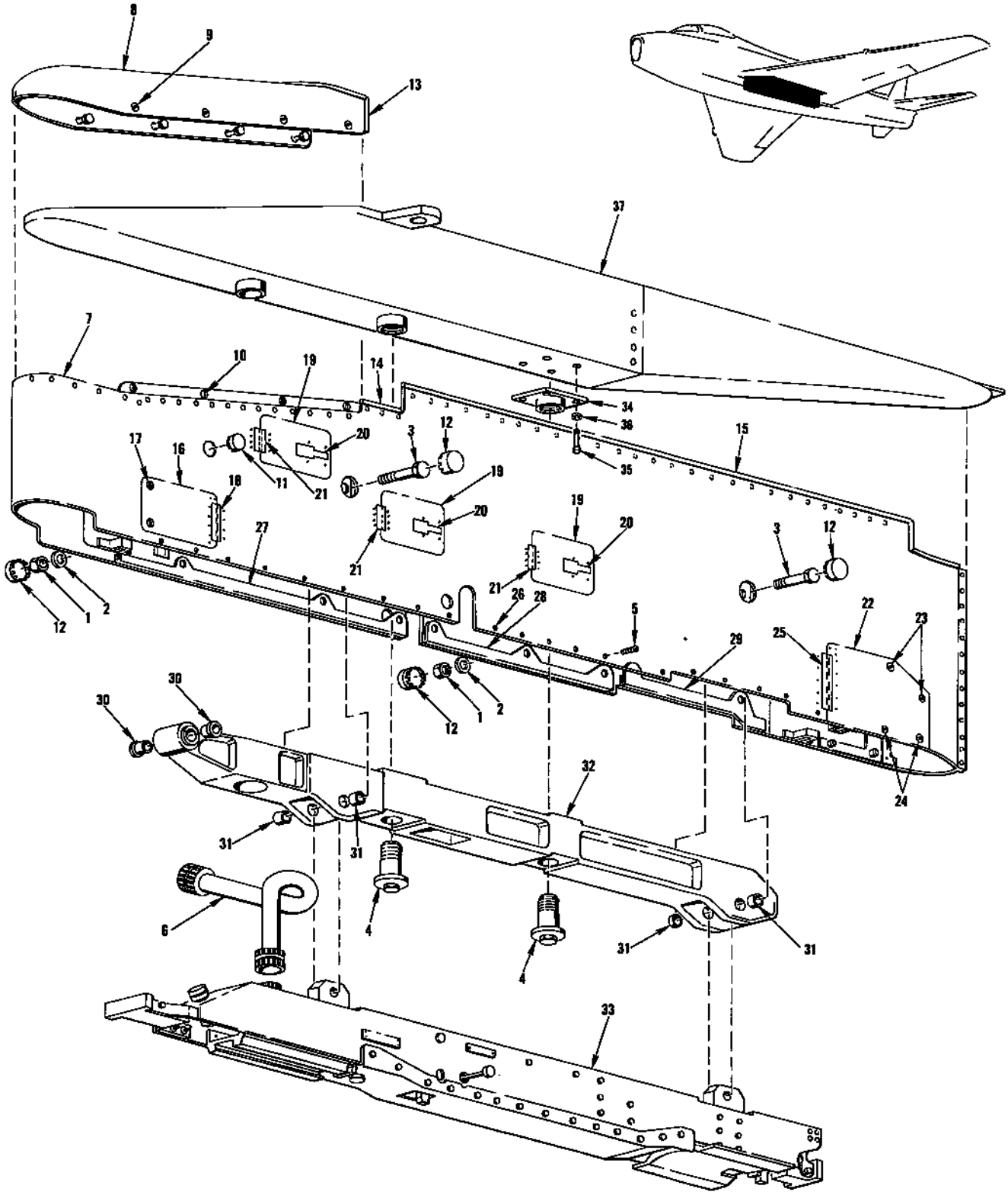

FIGURE 346 - MISSILE PYLON AND ADAPTER COMBINATION AT BL 48 LH - APPLICABLE TO AIRCRAFT CODED (KY)

MISSILE PYLON AND ADAPTER COMBINATION AT BL 48 LH - APPLICABLE TO AIRCRAFT CODED (KY)

FIGURE & INDEX NO.	PART NUMBER	1	2	3	4	5	6	7	NOMENCLATURE	UNITS PER ASSY.	USABLE ON CODE	S/C NO.
346	209-63202-71	*1							PACKAGE, Provision for external stores (Serial Nos. H-001 through H-005) (see figures 344, 345 and 347 for additional breakdown)	1	KY	
	209-68210								PYLON ASSEMBLY, BL 48 LH (superseded by 209-68210-11 for future procurement) (see figure 347)	1	KY	
-1	AN364-1216								NUT	2	KY	
-2	2W18-1216M								WASHER, Flat (NA) (89372)	2	KY	
-3	NAS464P12A43								BOLT	2	KY	
-4	209-68215								BOLT, Pylon attaching (magnetic inspected)	2	KY	
-5	AN509-10R6								SCREW	30	KY	
-6	209-540153-21								HARNESS, Electrical pylon assembly of	1	KY	
-7	209-68216								FAIRING ASSEMBLY, BL 48 LH pylon (superseded by 209-68216-101 for future procurement) (see figure 347)	1	KY	
-8	209-68216-31								NOSE, BL 48 LH pylon fairing assembly	1	KY	
-9	98265-1-.180								STUD (MKL) (76530)	8	KY	
	GH5x-.622								GROMMET (DZ) (72794)	8	KY	
	99336								PIN (MKL) (76530)	8	KY	
-10	99947-C-.130								RECEPTACLE (MKL) (76530)	8	KY	
-11	48155								PLUG BUTTON (UC) (61864)	2	KY	
-12	50841								PLUG BUTTON (UC) (61864)	8	KY	
-13	209-68216-65								SEAL, BL 48 LH pylon fairing assembly	1	KY	
-14	209-68216-63								SEAL, BL 48 LH pylon fairing assembly (outboard)	1	KY	
	209-68216-67								SEAL, BL 48 LH pylon fairing assembly (inboard)	1	KY	
-15	209-68216-61								SEAL, BL 48 LH pylon fairing assembly (outboard)	1	KY	
	209-68216-59								SEAL, BL 48 LH pylon fairing assembly (inboard)	1	KY	
-16	209-68216-49								DOOR, BL 48 LH pylon fairing assembly (outboard)	1	KY	
	209-68216-50								DOOR, BL 48 LH pylon fairing assembly (inboard)	1	KY	
-17	UFT20								STUD (DZ) (72794)	4	KY	
	GH5x-.622								GROMMET (DZ) (72794)	4	KY	
	URF5								RECEPTACLE (DZ) (72794)	4	KY	
-18	H-6300S-2.5-072-072								HINGE (HWL) (83014)	2	KY	
-19	209-68216-45								DOOR, BL 48 LH pylon fairing assembly (outboard only)	3	KY	
-20	H-5000-072-132								LATCH (HWL) (83014)	3	KY	
-21	H-6300S-1.875-072-072								HINGE (HWL) (83014)	2	KY	
-22	209-68216-41								DOOR, BL 48 LH pylon fairing assembly (outboard)	1	KY	
	209-68216-42								DOOR, BL 48 LH pylon fairing assembly (inboard)	1	KY	
-23	UF5T20								STUD (DZ) (72794)	4	KY	
-24	UF5T30								STUD (DZ) (72794)	4	KY	
	GH5x-.622								GROMMET (DZ) (72794)	8	KY	
	URF5								RECEPTACLE (DZ) (72794)	8	KY	
-25	H-6300S-4-072-072								HINGE (HWL) (83014)	1	KY	
-26	AN509-10R6								SCREW	12	KY	
	209-68216-7								CHANNEL, BL 48 LH pylon fairing assembly (outboard)	1	KY	
-27	209-68216-8								CHANNEL, BL 48 LH pylon fairing assembly (inboard)	1	KY	
	209-68216-5								CHANNEL, BL 48 LH pylon fairing assembly (outboard)	1	KY	
-28	209-68216-6								CHANNEL, BL 48 LH pylon fairing assembly (inboard)	1	KY	
	209-68216-3								CHANNEL, BL 48 LH pylon fairing assembly (outboard)	1	KY	
-29	209-68216-4								CHANNEL, BL 48 LH pylon fairing assembly (inboard)	1	KY	
	209-68211-11								BEAM ASSEMBLY, Pylon	1	KY	
-30	4B20B12-016								BUSHING, Press-fit flanged (NA) (89372)	2	KY	
-31	4B19B12-016								BUSHING, Press-fit plain (NA) (89372)	4	KY	
-32	209-68211-3								HOUSING, Pylon beam assembly	1	KY	
-33	No Number								LAUNCHER ASSEMBLY, Missile (X5A) (GFP)	1	KY	
-34	209-68220								FITTING, Bullpup pylon adapter beam	1	KY	
	ATTACHING PARTS											
-35	AN6H7A								BOLT	4	KY	
-36	2W17-616								WASHER, Corrosion-resistant steel (NA) (89372)	4	KY	
	---*---											
-37	209-63210-1								PYLON ASSEMBLY, BL 48 adapter LH (see figure 340 for breakdown)	1	FR	

NOTE: *1 Applicable to aircraft coded (KX) with Service Change No. 525 incorporated.

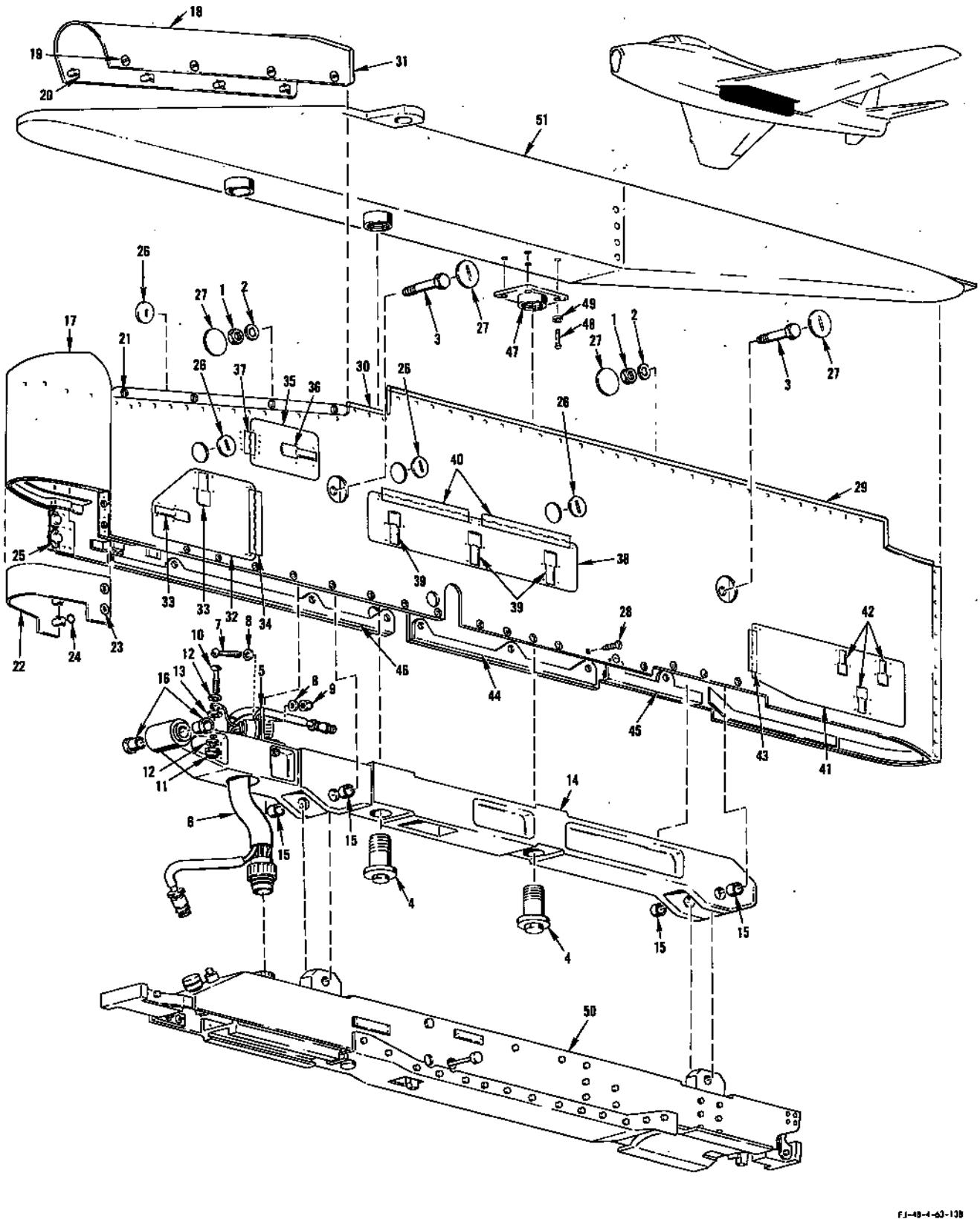

FIGURE 347 - BULLPUP EXTERNAL STORES PROVISION PACKAGE AT BL 48 LH - APPLICABLE TO AIRCRAFT CODED (KY)

BULLPUP EXTERNAL STORES PROVISION PACKAGE AT BL 48 LH - APPLICABLE TO AIRCRAFT CODED (KY)

FIGURE & INDEX NO.	PART NUMBER	1	2	3	4	5	6	7	NOMENCLATURE	UNITS PER ASSY.	USABLE ON CODE	S/C NO.
347	209-63202-171	*1							PACKAGE, Provision for external stores (Serial Nos. H-006 and subsequent) (see figure 348 for additional breakdown)	1	KY	
.	209-68210-11		.						PYLON ASSEMBLY, Bullpup BL 48 LH (supersedes 209-68210 for future procurement) (see figure 348)	1	KY	
-1	AN364-1216		.	.					NUT	2	KY	
-2	2W18-1216M		.	.					WASHER, Flat (NA) (89372)	4	KY	
-3	NAS464P12A43		.	.					BOLT	2	KY	
-4	209-68215		.	.					BOLT	2	KY	
	209-68238		.	.					BRACKET	1	KY	
-5	209-68238		.	.					BRACKET, Bullpup pylon electrical receptacle	1	KY	
	ATTACHING PARTS											
	AN520-10R12		.	.					SCREW	2	KY	
	2W18-10M		.	.					WASHER, Flat (NA) (89372)	4	KY	
	AN365-1032		.	.					NUT	2	KY	
	---*---											
	AN7510-2		.	.					NAMEPLATE	1	KY	
-6	244-54311-11		.	.					HARNESS ASSEMBLY, Electrical Bullpup pylon	1	KY	
	ATTACHING PARTS											
-7	AN515-4RT		.	.					SCREW	4	KY	
-8	2W18-4		.	.					WASHER, Flat (NA) (89372)	8	KY	
-9	AN365-440		.	.					NUT	4	KY	
-10	AN520-10R12		.	.					SCREW	1	KY	
-11	AN365-1032		.	.					NUT	1	KY	
-12	2W18-10M		.	.					WASHER, Flat (NA) (89372)	2	KY	
-13	2W1AL-14-4-32		.	.					WASHER, Plain (NA) (89372)	1	KY	
	---*---											
-14	209-68211-11		.	.					BEAM ASSEMBLY, Bullpup pylon fairing assembly BL 48 LH	1	KY	
-15	4B19-B12-016		.	.	.				BUSHING, Press-fit plain (NA) (89372)	4	KY	
-16	4B20-B12-016		.	.	.				BUSHING, Press-fit flanged (NA) (89372)	2	KY	
-17	209-68216-101		.	.					FAIRING ASSEMBLY, Bullpup pylon, BL 48 LH (supersedes 209-68216 for future procurement) (see figure 348)	1	KY	
-18	209-68216-131		.	.	.				NOSE, Bullpup pylon fairing assembly BL 48 LH	1	KY	
-19	98265-1-.180		.	.	.				STUD (MKL) (76530)	8	KY	
	GH5x-.622		.	.	.				GROMMET (DZ) (72794)	8	KY	
-20	99336		.	.	.				PIN (MKL) (76530)	8	KY	
-21	99947-C-.130		.	.	.				RECEPTACLE	8	KY	
-22	209-68216-183		.	.	.				FAIRING, Bullpup pylon fairing assembly BL 48 LH	1	KY	
-23	UFT20		.	.	.				STUD (DZ) (72794)	4	KY	
-24	GR5		.	.	.				GROMMET (DZ) (72794)	4	KY	
-25	URF5		.	.	.				RECEPTACLE (DZ) (72794)	4	KY	
-26	H-8700-74-7		.	.	.				DOOR, Rotary access (HWL) (83014)	4	KY	
-27	H-8708-1		.	.	.				DOOR, Rotary access (HWL) (83014)	4	KY	
-28	AN509-10R6		.	.	.				SCREW	36	KY	
	209-68216-59		.	.	.				SEAL, BL 48 LH Bullpup pylon fairing assembly (inboard side)	1	KY	
-29	209-68216-61		.	.	.				SEAL, BL 48 LH Bullpup pylon fairing assembly (outboard side)	1	KY	
-30	209-68216-63		.	.	.				SEAL, BL 48 LH Bullpup pylon fairing assembly	2	KY	
-31	209-68216-65		.	.	.				SEAL, BL 48 LH Bullpup pylon fairing assembly	1	KY	
-32	244-68212-1		.	.	.				DOOR ASSEMBLY, LH forward Bullpup pylon fairing assembly BL 48 LH	1	KY	
	244-68212-2		.	.	.				DOOR ASSEMBLY, RH forward Bullpup pylon fairing assembly BL 48 LH	1	KY	
-33	H-5000-.072-.142		.	.	.				. LATCH (HWL) (83014)	2	KY	
-34	H6300S4.5-.072-.135		.	.	.				. HINGE (HWL) (83014)	1	KY	
-35	209-68216-45		.	.	.				DOOR, Electrical access Bullpup pylon fairing assembly BL 48 LH	1	KY	
-36	H-5000-.072-.142		.	.	.				LATCH (HWL) (83014)	1	KY	
-37	H6300S1.875-.072-.072		.	.	.				HINGE (HWL) (83014)	1	KY	
-38	209-68216-187		.	.	.				DOOR, Intermediate Bullpup pylon fairing assembly BL 48 LH	1	KY	
-39	H-5000-.072-.142		.	.	.				LATCH (HWL) (83014)	3	KY	
-40	H6300S6.0-.072-.072		.	.	.				HINGE (HWL) (83014)	2	KY	
-41	209-68216-141		.	.	.				DOOR, Aft Bullpup pylon fairing assembly BL 48 LH	2	KY	
-42	H-5000-.072-.142		.	.	.				LATCH (HWL) (83014)	6	KY	
-43	H6300S3-.072-.072		.	.	.				HINGE (HWL) (83014)	2	KY	
-44	244-68214-2		.	.	.				CHANNEL ASSEMBLY, RH center Bullpup pylon fairing assembly, BL 48 LH	1	KY	
	244-68214-1		.	.	.				CHANNEL ASSEMBLY, LH center Bullpup pylon fairing assembly, BL 48 LH	1	KY	
-45	244-68215-2		.	.	.				CHANNEL ASSEMBLY, RH aft Bullpup pylon fairing assembly BL 48 LH	1	KY	
	244-68215-1		.	.	.				CHANNEL ASSEMBLY, LH aft Bullpup pylon fairing assembly BL 48 LH	1	KY	
-46	244-68216-2		.	.	.				CHANNEL ASSEMBLY, RH forward Bullpup pylon fairing assembly BL 48 LH	1	KY	
	244-68216-1		.	.	.				CHANNEL ASSEMBLY, LH forward Bullpup pylon fairing assembly BL 48 LH	1	KY	
-47	209-68220		.						FITTING, Bullpup pylon adapter beam	1	KY	
	ATTACHING PARTS											
-48	AN6H7A		.						BOLT	4	KY	
-49	2W17-616		.						WASHER, Corrosion-resistant (NA) (89372)	4	KY	
	---*---											
-50	No Number								LAUNCHER ASSEMBLY, Missile (Aero 5A) (GFP)	1	KY	
-51	209-63210-1								PYLON ASSEMBLY, Adapter BL 48 LH (see figure 340 for breakdown)	1	KY	

NOTE: *1 Applicable to aircraft coded (KX) with Service Change No. 525 incorporated

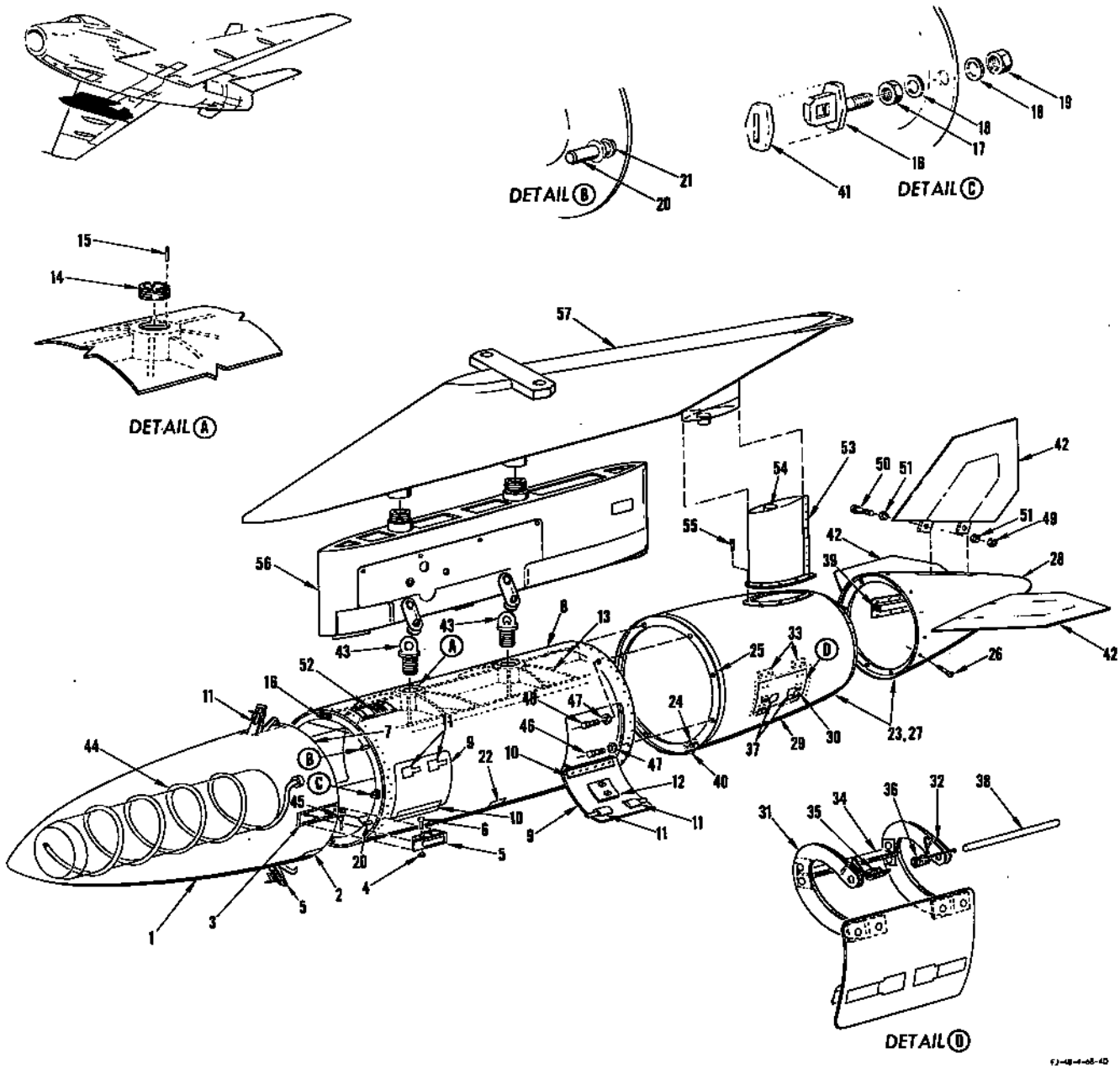

FIGURE 348 - BULLPUP EXTERNAL STORES PROVISION PACKAGES AT BL 48 RH - APPLICABLE TO AIRCRAFT CODED (KY)

FIGURE & INDEX NO.	PART NUMBER	1 2 3 4 5 6 7 NOMENCLATURE	UNITS PER ASSY.	USABLE ON CODE	S/C NO.
348	209-63202-71	*1 PACKAGE, Provision for external stores (Serial Nos. H-001 through H-005) (see figures 344, 345 and 346 for additional breakdown)	1	KY	
	209-63202-171	*1 PACKAGE, Provision for external stores (Serial Nos. H-006 and subsequent) (see figure 347 for breakdown)	1	KY	
	209-68214	. POD ASSEMBLY, Bullpup control (used on 209-63202-71 package only) (see figures 269 and 269A for electrical breakdown) (Pod Serial Nos. H-001 through H-005)	1	KY	
	209-68214-11	. POD ASSEMBLY, Bullpup control (used on 209-63202-171 package only) (see figures 269 and 269A for electrical breakdown) (Pod Serial Nos. H-006 and subsequent)	1	KY	

BULLPUP EXTERNAL STORES PROVISION PACKAGES AT BL 48 RH - APPLICABLE TO AIRCRAFT CODED (KY)

FIGURE & INDEX NO.	PART NUMBER	1	2	3	4	5	6	7	NOMENCLATURE	UNITS PER ASSY.	USABLE ON CODE	S/C NO.
348	209-68266		.	.	CONE ASSEMBLY, Bullpup control pod forward					1	KY	
-1	209-68232		.	.	.	CONE, Bullpup control pod forward				1	KY	
-2	209-68210		.	.	.	COVER, Bullpup control pod drainage				2	KY	
-3	209-68237		.	.	.	WELL, Bullpup control pod forward latch				4	KY	
-4	2W18-10M		.	.	.	WASHER, Flat (NA) (89372)				4	KY	
-5	H-9176S		.	.	.	LATCH (HWL) (83014)				4	KY	
	AN380-2-2		.	.	.	PIN				4	KY	
-6	AN393-41		.	.	.	PIN				4	KY	
-7	209-68266-27		.	.	.	SEAL				1	KY	
-8	209-68227	*2, 3	.	.	FRAME ASSEMBLY, Bullpup control pod center (superseded by 209-68227-41 for future procurement)					1	KY	
	209-68227-41	*2, 3	.	.	FRAME ASSEMBLY, Bullpup control pod center (supersedes 209-68227 for future procurement)					1	KY	
-9	209-68227-13		.	.	.	DOOR, Control pod center frame assembly				4	KY	
-10	209-68227-35		.	.	.	HINGE, Control pod center frame assembly				8	KY	
-11	H-5000-064-156		.	.	.	LATCH (HWL) (83014)				8	KY	
	AN253-2-500		.	.	.	HINGE PIN				4	KY	
-12	209-543218		.	.	.	FUSE HOLDER ASSEMBLY, Electrical control spare fuse				1	KY	
-13	209-68229		.	.	.	FRAME ASSEMBLY, Bullpup control pod center, upper				1	KY	
-14	209-68230		.	.	.	.	INSERT, Bullpup control pod			2	KY	
-15	52-018-078-0937		.	.	.	.	ROLLPIN (EN) (72962)			2	KY	
-16	209-68226		.	.	.	EYEBOLT, Control pod				4	KY	
-17	AN316-5R		.	.	.	NUT				4	KY	
-18	2W18-516M		.	.	.	WASHER, Flat (NA) (89372)				8	KY	
-19	AN365-524		.	.	.	NUT				4	KY	
-20	HS10-8-3-9		.	.	.	STUD PIN (HIS) (73197)				4	KY	
-21	NAS179-8		.	.	.	COLLAR				4	KY	
-22	244-68210		.	.	.	COVER, Bullpup control pod drainage (used on 209-68227-41 only)				3	KY	
-23	209-68228	*2, 3	.	.	CONE ASSEMBLY, Bullpup control pod aft					1	KY	
-24	209-68228-29		.	.	.	BLOCK, Bullpup control pod aft				8	KY	
-25	209-68228-31		.	.	.	SEAL, Bullpup control pod aft				1	KY	
-26	7S15-10-8		.	.	.	SCREW, 100° flush head close tolerance (NA) (89372)				12	KY	
-27	209-68228-61	*2, 3	.	.	CONE ASSEMBLY, Bullpup control pod aft					1	KY	
-28	209-68228-41		.	.	.	CONE SUBASSEMBLY, Bullpup control pod aft				1	KY	
-29	209-68228-51		.	.	.	CONE SUBASSEMBLY, Bullpup control pod aft				1	KY	
	209-68228-71		.	.	.	.	CONE SUBASSEMBLY, Bullpup control pod aft			1	KY	
-30	209-68228-39		.	.	.	.	.	DOOR, Bullpup control pod aft		1	KY	
-31	209-68228-53		.	.	.	.	.	ARM, LH Bullpup control pod aft door		2	KY	
-32	209-68228-54		.	.	.	.	.	ARM, RH Bullpup control pod aft door		2	KY	
-33	209-68228-55		.	.	.	.	.	HINGE, Bullpup control pod aft door		2	KY	
-34	209-68228-57		.	.	.	.	.	ARM SUPPORT, Bullpup control pod aft door		2	KY	
-35	244-68211-1		.	.	.	.	.	SPRING, LH Bullpup control pod aft door		1	KY	
-36	244-68211-2		.	.	.	.	.	SPRING, RH Bullpup control pod aft door		1	KY	
-37	H-5000-064-125		.	.	.	.	.	LATCH (HWL) (83014)		2	KY	
-38	NAS561C8-58		.	.	.	.	.	ROLL PIN		1	KY	
-39	209-68228-43		.	.	.	BLOCK, Bullpup control pod aft				1	KY	
-40	244-68210		.	.	.	COVER, Bullpup control pod drainage				1	KY	
-41	244-68011		.	.	SEAL, Bullpup control pod latch					4	KY	
-42	209-68234		.	.	FIN					3	KY	
-43	244-68010-3		.	.	LUG, Bullpup control pod attaching					2	KY	
-44	244-71010		.	.	ANTENNA, Radio guidance Bullpup assembly of (used on 209-68214 only) (superseded by 244-71010-21 for future procurement)					1	KY	
	244-71010-11		.	.	ANTENNA, Radio guidance Bullpup assembly of (supersedes 244-71010 for future procurement)					1	KY	
-45	BL-ST-4-1.400		.	.	BALL-LOK PIN (D. W. Price Corp) (97978)					1	KY	
-46	AN4-7A		.	.	BOLT					6	KY	
-47	2W18-416		.	.	WASHER, Flat (NA) (89372)					8	KY	
-48	AN4-11A		.	.	BOLT					2	KY	
-49	AN365-428		.	.	NUT					6	KY	
-50	AN4-14A		.	.	BOLT					6	KY	
-51	2W18-416M		.	.	WASHER, Flat (NA) (89372)					12	KY	
-52	AN7510-2		.	.	PLATE					1	KY	
	209-68236	*4	.	FAIRING ASSEMBLY, Bullpup control wire disconnect						1	KY	
-53	209-68236-11	*4	.	FAIRING ASSEMBLY, Bullpup control wire disconnect						1	KY	
-54	209-68236-21		.	.	FAIRING SUBASSEMBLY, Bullpup control wire disconnect					1	KY	
-55	7S15-10-8		.	SCREW, 100° flush head close tolerance (NA) (89372)						9	KY	
-56	No Number		LAUNCHER ASSEMBLY, Bomb and rocket (Aero 15B or Aero 15C)							1	KY	
-57	209-63210-102		PYLON ASSEMBLY, BL 48 RH adapter (see figure 340 for breakdown)							1	KY	

NOTE: *1 Applicable to aircraft coded (KY) and aircraft coded (KX) with Service Change Number 525 incorporated.
*2 209-68227-41 together with 209-68228-61 and 244-71010-21 supersede 209-68227 together with 209-68228 and 244-71010 for future procurement
*3 209-68228-61 together with 209-68227-41 and 209-68236-11 supersede 209-68228 together with 209-68227 and 209-68236 for future procurement
*4 209-68236-11 together with 209-68227-41 and 209-68228-61 supersede 209-68236 together with 209-68227 and 209-68228 for future procurement

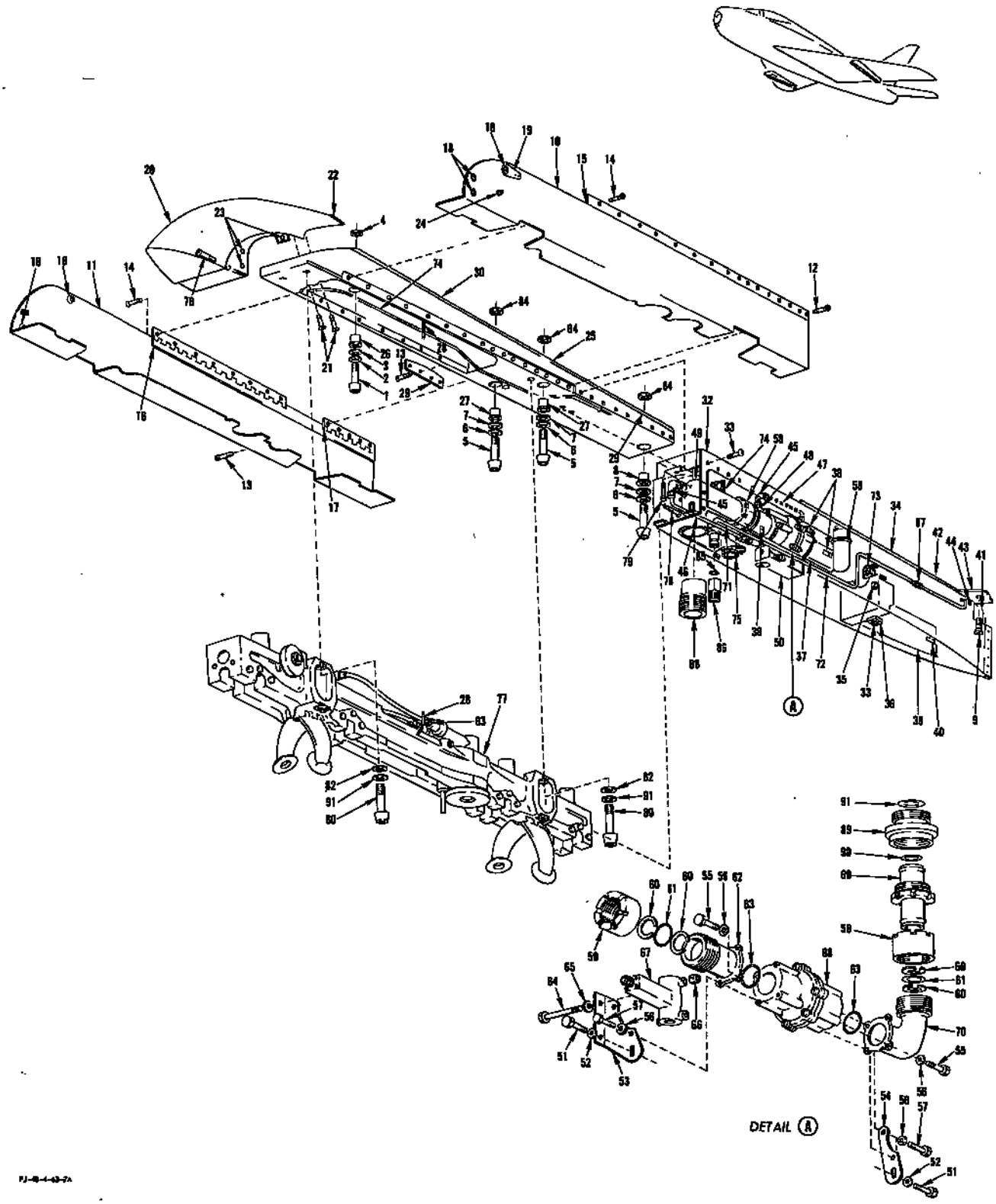

FIGURE 349 - PROVISION PACKAGE FOR AERO 1A 150 GALLON FUEL TANK - APPLICABLE TO AIRCRAFT CODED (FR)

PROVISION PACKAGE FOR AERO 1A 150 GALLON FUEL TANK - APPLICABLE TO AIRCRAFT CODED (FR)

FIGURE & INDEX NO.	PART NUMBER	1	2	3	4	5	6	7	NOMENCLATURE	UNITS PER ASSY.	USABLE ON CODE	S/C NO.
349	209-63202-41		PACKAGE, Provision for external stores							1	FR	
	209-63212-1		.	PYLON ASSEMBLY, 150 gallon tank LH						1	FR	
	209-63212-2		.	PYLON ASSEMBLY, 150 gallon tank RH						1	FR	
	ATTACHING PARTS											
-1	MS20007H22		.	BOLT						1	FR	
-2	MS20002C7		.	WASHER						1	FR	
-3	600-042-7/16		.	STAT-O-SEAL (WFRC) (83259)						1	FR	
-4	AN6227B10		.	PACKING						1	FR	
-5	MS20008H18		.	BOLT						3	FR	
-6	MS20002C8		.	WASHER						3	FR	
-7	600-042-1/2		.	STAT-O-SEAL (WFRC) (83259)						3	FR	
-8	209-63093		.	BUSHING, Outboard pylon aft attaching						1	FR	
-9	7S15-10-13		.	SCREW, 100° flush head (close tolerance head) (NA) (89372)						2	FR	
	---*---											
	209-63221-1	*1	.	.	DOOR ASSEMBLY, 150 gallon tank pylon LH (LH wing outboard)					1	FR	
	209-63221-2	*1	.	.	DOOR ASSEMBLY, 150 gallon tank pylon RH (RH wing outboard)					1	FR	
	209-63221-11	*1	.	.	DOOR ASSEMBLY, 150 gallon tank pylon LH (LH wing inboard)					1	FR	
	209-63221-12	*1	.	.	DOOR ASSEMBLY, 150 gallon tank pylon RH (RH wing inboard)					1	FR	
-10	209-63221-41	*1	.	.	DOOR ASSEMBLY, 150 gallon tank pylon LH (LH wing outboard)					1	FR	
	209-63221-42	*1	.	.	DOOR ASSEMBLY, 150 gallon tank pylon RH (RH wing outboard)					1	FR	
-11	209-63221-51	*1	.	.	DOOR ASSEMBLY, 150 gallon tank pylon LH (LH wing inboard)					1	FR	
	209-63221-52	*1	.	.	DOOR ASSEMBLY, 150 gallon tank pylon RH (RH wing inboard)					1	FR	
	ATTACHING PARTS											
-12	AN509-10R7		.	.	SCREW (used on outboard side)					8	FR	
-13	AN509-10R7		.	.	SCREW (used on inboard side)					9	FR	
-14	AN509-10R11		.	.	SCREW					16	FR	
	---*---											
-15	AN253-2-2064		.	.	. PIN (used on 209-63221-41 and -42 only)					1	FR	
-16	AN253-2-825		.	.	. PIN (used on 209-63221-51 and -52 only)					1	FR	
-17	AN253-2-594		.	.	. PIN (used on 209-63221-51 and -52 only)					1	FR	
-18	UF5T20		.	.	. STUD (DZ) (72794)					5	FR	
	GH5x-.662		.	.	. GROMMET (DZ) (72794)					5	FR	
-19	209-63221-31		.	.	. SPRING, Ejector					1	FR	
-20	209-63218-1		.	.	FAIRING ASSEMBLY, 150 gallon tank forward LH					1	FR	
	209-63218-2		.	.	FAIRING ASSEMBLY, 150 gallon tank forward RH					1	FR	
	ATTACHING PARTS											
-21	AN520-10R14		.	.	SCREW					4	FR	
	---*---											
-22	209-63218-17		.	.	. SEAL, 150 gallon tank pylon forward fairing assembly (make from 209-963245 x 9)					1	FR	
-23	URF5		.	.	. RECEPTACLE (DZ) (72794)					6	FR	
-24	AN3117-1		.	.	RECEPTACLE					1	FR	
	209-63224-11	*1	.	.	ADAPTER ASSEMBLY, 150 gallon tank pylon LH					1	FR	
	209-63224-12	*1	.	.	ADAPTER ASSEMBLY, 150 gallon tank pylon RH					1	FR	
	209-63224-21	*1	.	.	ADAPTER ASSEMBLY, 150 gallon tank pylon LH					1	FR	
	209-63224-22	*1	.	.	ADAPTER ASSEMBLY, 150 gallon tank pylon RH					1	FR	
	209-63224-3	*1	.	.	. ADAPTER, 150 gallon tank pylon adapter assembly LH					1	FR	
	209-63224-4	*1	.	.	. ADAPTER, 150 gallon tank pylon adapter assembly RH					1	FR	
-25	209-63224-5	*1	.	.	. ADAPTER, 150 gallon tank pylon adapter assembly LH					1	FR	
	209-63224-6	*1	.	.	. ADAPTER, 150 gallon tank pylon adapter assembly RH					1	FR	
-26	209-63092		.	.	. BUSHING, Outboard pylon forward attaching					1	FR	
-27	209-63093		.	.	. BUSHING, Outboard pylon aft attaching					2	FR	
-28	1J1-2-2-6		.	.	JUMPER, Wire (NA) (89372)					1	FR	
	ATTACHING PARTS											
	AN365-832		.	.	NUT					2	FR	
	2W18-8		.	.	WASHER, Flat (NA) (89372) (use under nut only)					2	FR	
	AN509-8-8		.	.	SCREW (in rack)					1	FR	
	AN509-8-13		.	.	SCREW (in pylon)					1	FR	
	---*---											
-29	209-63225-1		.	.	FAIRING, 150 gallon tank pylon inboard LH					1	FR	
	209-63225-2		.	.	FAIRING, 150 gallon tank pylon inboard RH					1	FR	
-30	209-63212-7		.	.	SEAL, 150 gallon tank pylon assembly LH (outboard) (make from 209-963245 x 14-1/4)					1	FR	
	209-63212-8		.	.	SEAL, 150 gallon tank pylon assembly RH (outboard) (make from 209-963245 x 14-1/4)					1	FR	
	209-63212-3		.	.	SEAL, 150 gallon tank pylon assembly LH (inboard) (make from 209-963245 x 11-3/8)					1	FR	
	209-63212-4		.	.	SEAL, 150 gallon tank pylon assembly RH (inboard) (make from 209-963245 x 11-3/8)					1	FR	
-31	209-63212-9		.	.	SEAL, 150 gallon tank pylon assembly LH (outboard) (make from 209-963245 x 17-1/2)					1	FR	
	209-63212-10		.	.	SEAL, 150 gallon tank pylon assembly RH (outboard) (make from 209-963245 x 17-1/2)					1	FR	
	209-63212-5		.	.	SEAL, 150 gallon tank pylon assembly (inboard) (make from 209-963245 x 20-1/4)					1	FR	
	209-63212-6		.	.	SEAL, 150 gallon tank pylon assembly (inboard) (make from 209-963245 x 20-1/4)					1	FR	
-32	209-63219-1		.	.	FAIRING ASSEMBLY, 150 gallon tank pylon rear LH					1	FR	
	209-63219-2		.	.	FAIRING ASSEMBLY, 150 gallon tank pylon rear RH					1	FR	
	ATTACHING PARTS											
-33	AN509-10R7		.	.	SCREW					9	FR	
	---*---											
	2W18-2L		.	.	. WASHER, Flat (NA) (89372)					2	FR	

PROVISION PACKAGE FOR AERO 1A 150 GALLON FUEL TANK - APPLICABLE TO AIRCRAFT CODED (FR)

FIGURE & INDEX NO.	PART NUMBER	1	2	3	4	5	6	7	NOMENCLATURE	UNITS PER ASSY.	USABLE ON CODE	S/C NO.
349-34	209-63219-31								SEAL, 150 gallon tank pylon rear fairing assembly (make from 209-963245 x 15-3/4)	1	FR	
	209-63219-29								SEAL, 150 gallon tank pylon rear fairing assembly (make from 209-963245 x 15) (used on inboard side)	1	FR	
-35	AN3-4								BOLT	1	FR	
	2W18-10								WASHER, Flat (NA) (89372)	1	FR	
	209-63219-131								FAIRING SUBASSEMBLY, 150 gallon tank pylon rear LH	1	FR	
	209-63219-132								FAIRING SUBASSEMBLY, 150 gallon tank pylon rear RH	1	FR	
	209-63219-61								FAIRING SUBASSEMBLY, 150 gallon tank pylon rear	1	FR	
-36	209-63231								FITTING, Pylon fairing	1	FR	
	209-63219-71								FAIRING SUBASSEMBLY, 150 gallon tank pylon rear LH	1	FR	
	209-63219-72								FAIRING SUBASSEMBLY, 150 gallon tank pylon rear RH	1	FR	
-37	209-63219-11								DOOR, 150 gallon tank pylon rear fairing subassembly LH	1	FR	
	209-63219-12								DOOR, 150 gallon tank pylon rear fairing subassembly RH	1	FR	
	ATTACHING PARTS											
	AN253-2-425								PIN	1	FR	
	209-63234-5								SPRING, External store pylon (torsion)	1	FR	
	---*---											
-38	H-5000-081-164								LATCH (HWL) (83014)	3	FR	
	209-63219-81								FAIRING SUBASSEMBLY, 150 gallon tank pylon rear LH	1	FR	
	209-63219-82								FAIRING SUBASSEMBLY, 150 gallon tank pylon rear RH	1	FR	
-39	209-63219-69								DOOR, 150 gallon tank pylon fairing subassembly LH	1	FR	
	209-63219-70								DOOR, 150 gallon tank pylon fairing subassembly RH	1	FR	
	ATTACHING PARTS											
	AN253-2-425								PIN	1	FR	
	209-63234-3								SPRING, External store pylon (torsion)	1	FR	
	---*---											
-40	H-5000-081-164								LATCH (HWL) (83014)	3	FR	
	209-63219-111								FAIRING SUBASSEMBLY, 150 gallon tank pylon rear LH	1	FR	
	209-63219-112								FAIRING SUBASSEMBLY, 150 gallon tank pylon rear RH	1	FR	
	209-63219-121								FAIRING SUBASSEMBLY, 150 gallon tank pylon rear LH	1	FR	
	209-63219-122								FAIRING SUBASSEMBLY, 150 gallon tank pylon rear RH	1	FR	
-41	209-63219-33								SEAL, 150 gallon tank pylon rear fairing subassembly (make from 209-963245 x 2-5/8)	1	FR	
-42	209-63219-57								SEAL, 150 gallon tank pylon rear fairing subassembly (make from 209-963245 x 1-3/8)	1	FR	
-43	209-63226-3								SUPPORT, 150 gallon tank pylon LH	1	FR	
	209-63226-4								SUPPORT, 150 gallon tank pylon RH	1	FR	
-44	AN509-10R8								SCREW	4	FR	
-45	AN833-4								ELBOW	3	FR	
	AN924-4								NUT	3	FR	
	MS29512-4								GASKET	3	FR	
-46	209-483214-11								LINE ASSEMBLY, Fuel 150 gallon drop tank (from solenoid to bleed port LH)	1	FR	
	209-483214-13								LINE ASSEMBLY, Fuel 150 gallon drop tank (from solenoid to bleed port RH)	1	FR	
-47	209-483214-7								LINE ASSEMBLY, Fuel 150 gallon drop tank (from level control valve to solenoid)	1	FR	
-48	AN815-4								UNION	1	FR	
	AN924-4								NUT	1	FR	
-49	209-483204								ELBOW, Fuel 150 gallon drop tank	1	FR	
-50	209-483221								BRACKET, Fuel 150 gallon drop tank shutoff valve lower assembly of	1	FR	
-51	AN3-3A								BOLT	2	FR	
-52	2W18-10M								WASHER, Flat (NA) (89372)	2	FR	
-53	209-483223-3								BRACKET, Fuel 150 gallon drop tank shutoff valve forward LH	1	FR	
	209-483223-4								BRACKET, Fuel 150 gallon drop tank shutoff valve forward RH	1	FR	
-54	209-483222								BRACKET, Fuel 150 gallon drop tank shutoff valve aft	1	FR	
-55	AN4H5A								BOLT	4	FR	
-56	2W18-416								WASHER, Flat (NA) (89372)	4	FR	
-57	AN4H6A								BOLT	4	FR	
-58	3655-24D								COUPLING, Flexible half (WIG) (79326)	2	FR	
-59	3605-3								NUT ASSEMBLY (WIG) (79326)	2	FR	
-60	3601-9								WASHER (WIG) (79326)	2	FR	
-61	MS29513-325								PACKING	2	FR	
-62	209-483203								FITTING, Fuel 150 gallon drop tank	1	FR	
-63	MS29513-222								PACKING	2	FR	
-64	AN3-16A								BOLT	2	FR	
-65	2W18-10M								WASHER, Flat (NA) (89372)	2	FR	
-66	AN365-1032								NUT	2	FR	
-67	V3900								VALVE, Shutoff (VABH) (96487)	1	FR	
-68	730100-1								VALVE, Fuel shutoff line mounted (AEDS) (96124)	1	FR	
-69	209-483208-1								LINE ASSEMBLY, Fuel 150 gallon drop tank	1	FR	
	209-483208								TUBE, Fuel 150 gallon drop tank line assembly	1	FR	
	209-483212								RETAINER, Fuel 150 gallon drop tank seal	1	FR	
-70	209-483207-1								FITTING, Fuel 150 gallon drop tank aft LH	1	FR	
	209-483207-2								FITTING, Fuel 150 gallon drop tank aft RH	1	FR	
-71	209-483205								FITTING ASSEMBLY, Fuel 150 gallon drop tank air	1	FR	
-72	R3800-6-0300								HOSE ASSEMBLY (RF) (50599)	1	FR	
	209-63212-11								PYLON SUBASSEMBLY, 150 gallon tank LH	1	FR	
	209-63212-12								PYLON SUBASSEMBLY, 150 gallon tank RH	1	FR	
-73	AN3102A20-27P								CONNECTOR	1	FR	
-74	AN3102A10SL3P								CONNECTOR	1	FR	
-75	9518-1								SOCKET (WIG) (79326)	1	FR	

PROVISION PACKAGE FOR AERO 1A 150 GALLON FUEL TANK - APPLICABLE TO AIRCRAFT CODED (FR)

FIGURE & INDEX NO.	PART NUMBER	1	2	3	4	5	6	7	NOMENCLATURE	UNITS PER ASSY.	USABLE ON CODE	S/C NO.
349-76	209-63212-25	.	.	.	TUBE, 150 gallon tank pylon subassembly LH					1	FR	
	209-63212	.	.	.	TUBE, 150 gallon tank pylon subassembly RH					1	FR	
-77	No Number	.	.	RACK, Ejector (Aero 7A) (DG) (18355) (use Douglas Aero 7A Ejector Rack Handbook)						1	FR	
-78	AN24-8	.	.	BOLT						4	FR	
-79	AN3-3A	.	.	BOLT						2	FR	
-80	MS20012H12	.	.	BOLT						4	FR	
-81	MS20002C12	.	.	WASHER						4	FR	
-82	209-63232	.	.	WASHER, External stores pylon						4	FR	
-83	209-63227	.	ADAPTER, MK-25 primer							1	FR	
-84	AN6227B11	.	PACKING							3	FR	
-85	MS29513-219	.	PACKING							1	FR	
-86	209-483247	.	ADAPTER, Fuel 150 gallon drop tank air							1	FR	
-87	AN815-6D	.	UNION							1	FR	
-88	209-483246	.	ADAPTER, Fuel 150 gallon drop tank fuel							1	FR	
-89	209-483210	.	HOUSING, Fuel 150 gallon drop tank							1	FR	
-90	MS29513-325	.	PACKING							1	FR	
-91	MS29513-232	.	PACKING							1	FR	

NOTE: *1 209-63221-41, -42, -51, -52 together with 209-63224-5, -6, -21 and -22 supersede 209-63221-1, -2, -11, -12 together with 209-63224-3, -4, -11 and -12 for future procurement

WINDSHIELD ANTI-ICE, CANOPY DEFROST AND COCKPIT AIR PRESSURE REGULATOR EQUIPMENT

FIGURE & INDEX NO.	PART NUMBER	1 2 3 4 5 6 7 NOMENCLATURE	UNITS PER ASSY.	USABLE ON CODE	S/C NO.
350-1	194-53340	DUCT ASSEMBLY, Heat and vent system primary heat exchanger cooling air inlet	1		
-2	172-53374-5	SEAL, Heat and vent system heat exchanger duct attaching	1		
-3	83198	HEAT EXCHANGER, Ram-air (HS)	1		
		ATTACHING PARTS			
-4	AN4-7A	BOLT	4		
-5	2W18-416M	WASHER, Flat (NA)	4		
		---*---			
-6	5R13-11	RING, Heat and vent sealing (NA)	1		
-7	194-53311	RING, Primary heat exchanger manifold alignment	1	BG	393
-8	194-53312	CLAMP, Primary heat exchanger "V" type manifold	2	BG	393
-9	43688-400	COUPLING, 90° "V" band (MAR) (interchangeable with K3290S-400SH (NUCA))	1	BH	393
	365-63-500SH	CLAMP, "V" band coupling (MAR)	1	BG	393
-10	194-53350	MANIFOLD ASSEMBLY, Heat and vent system primary heat exchanger high pressure air	1		
-11	5R13-15	RING, Heat and vent sealing (NA)	2		
-12	43688-125	COUPLING, 90° "V" band (MAR) (interchangeable with K3290S-125SH (NUCA))	2		
-13	4125-17	VALVE, Butterfly hot air (TRPR) (for breakdown see Technical Manual NA 03-80E-505)	1		
-14	5R13-3	RING, Heat and vent sealing (NA)	11		
-15	43688-150	COUPLING, 90° "V" band (MAR) (interchangeable with K3290S-150SH (NUCA))	11		
-16	104685	VALVE, Hot air (WTR) (for breakdown see Technical Manual AN 03-1-110)	1		
-17	194-53351	NOZZLE ASSEMBLY, Heat and vent hot air by-pass	1		
-18	206-1680	CONNECTOR ASSEMBLY, Heat and vent system flow nozzle misaligning (DNKA)	1		
-19	209-53353	DUCT ASSEMBLY, Heat and vent system canopy defrost and windshield anti-ice supply	1		
-20	S-83358	FLEX DUCT (CME)	2		
-21	AN6290-4	GASKET	4		
-22	AN924-4	NUT	1		
-23	AN832-4D	UNION	1		
-24	AN926-4D	TEE	1		
-25	MS21902D4	UNION	1		
-26	AN815-4D	UNION	1		
-27	181-53385-107	LINE ASSEMBLY, Heat and vent system canopy seal anti-ice duct to check valve	1		
-28	259A-4TT	CHECK VALVE (JAPC) (for breakdown see Technical Manual NA 03-10ABG-572)	1		
		ATTACHING PARTS			
-29	MS21919DC13	CLAMP	1		
	AN520-10R10	SCREW	1		
	2W18-10M	WASHER, Flat (NA)	2		
	AN365-1032	NUT	1		
		---*---			
-30	209-48801-53	TUBE ASSEMBLY, Drop tank pressure elbow station 180.9 to heat and vent line (see Fuel System)	1	ET	
	209-48801-231	TUBE ASSEMBLY, Drop tank pressure shutoff valve to tee station 180.9 (see Fuel System)	1	FR	
-31	209-53395	DUCT ASSEMBLY, Heat and vent system fuselage station 172.5 inverter cooling inlet	1		
-32	4D1-5-097	DUCT, Wire supported flexible (NA)	1		
	AN737RM48	CLAMP	2		
-33	209-53396	ADAPTER ASSEMBLY, Heat and vent system fuselage station 180.906 inverter cooling	1		
-34	209-53397	DUCT ASSEMBLY, Heat and vent system fuselage station 181 to station 186 inverter cooling	1		
-35	209-53398	OUTLET ASSEMBLY, Heat and vent system fuselage station 188 inverter cooling	1		
-36	209-53385	DUCT ASSEMBLY, Heat and vent system canopy defrost valve to fuselage station 150	1		
-37	181-53370-11	CONNECTOR, Heat and vent system duct high-temperature	2		
	AN737RM46	CLAMP	4		
	5S6	STRIP, Bonding hose connector (NA)	2		
-38	209-53383	DUCT, Heat and vent system fuselage station 136 to station 154 canopy defrost	1		
-39	209-53384	BRACKET, Heat and vent system fuselage station 143.5 canopy defrost duct support	1		
		ATTACHING PARTS			
	AN520-10R10	SCREW	3		
	2W18-10	WASHER, Flat (NA)	4		
	AN365-1032	NUT	3		
	MS21919DH20	CLAMP	1		
	2W18-10M	WASHER, Flat (NA)	2		
		---*---			
-40	209-53407	ELBOW ASSEMBLY, Heat and vent system defrost duct canopy break	1		
		ATTACHING PARTS			
	AN365-1032	NUT	4		
	2W18-10M	WASHER, Flat (NA)	8		
	AN520-10R10	SCREW	4		
		---*---			
-41	209-53401	SLEEVE, Heat and vent system canopy defrost disconnect seal	1		
	209-53403	SEAL, Heat and vent system canopy defrost disconnect	1		
-42	209-53405	ELBOW ASSEMBLY, Heat and vent system defrost duct canopy break upper	1		
		ATTACHING PARTS			
-43	AN365-1032	NUT	1		
-44	2W18-10M	WASHER, Flat (NA)	2		

LIQUID OXYGEN - APPLICABLE TO AIRCRAFT CODED (BS)

FIGURE & INDEX NO.	PART NUMBER	1 2 3 4 5 6 7 NOMENCLATURE	UNITS PER ASSY.	USABLE ON CODE	S/C NO.
352	209-73353	CONTAINER ASSEMBLY, Oxygen equipment	1	BS	
-1	14460	. FIVE LITER LIQUID OXYGEN CONVERTER INSTALLATION (ARO) (03990) (see figure 354 for breakdown)	1	BS	
-2	900095	. . VALVE AND CAP ASSEMBLY, Filler (ARO) (03990)	1	BS	
	900187	. . "O" RING (ARO) (03990)	1	BS	
-3	199000-2	. DISCONNECT OUTLET (ESSX) (83533) (see figure 352A for breakdown)	1	BS	
-4	200000-2	. DISCONNECT OUTLET (ESSX) (83533) (see figure 352A for breakdown)	1	BS	
-5	209-73366	BOLT, Oxygen container forward mounting	1	BS	
-6	209-73359-3	CLIP, Oxygen system flask mounting (supersedes 209-73359 for future procurement)	1	BS	
-7	209-73357	BRACKET ASSEMBLY, Liquid oxygen system flask mounting station 53	1	BS	
-8	209-73361	. BOLT, Oxygen container aft mounting	1	BS	
-9	209-73362	. NUT, Oxygen container aft mounting swivel	1	BS	
-10	2R6-6-3-4	. STUD, Hi-shear rivet (NA) (89372)	1	BS	
	HS15-6	. COLLAR (HIS) (73197)	1	BS	
-11	209-73355-5	HOSE ASSEMBLY, Liquid oxygen equipment	1	BS	
	R3800X-5-0126	. HOSE, Teflon (RF) (50599)	1	BS	
-12	199000-1	. DISCONNECT OUTLET (ESSX) (83533)(see figure 352A for breakdown)	1	BS	
-13	209-73355-3	HOSE ASSEMBLY, Liquid oxygen equipment	1	BS	
	R3800X-6-0136	. HOSE, Teflon (RF) (50599)	1	BS	
-14	200000-1	. DISCONNECT OUTLET (ESSX) (83533)(see figure 352A for breakdown)	1	BS	
	209-73354	VALVE ASSEMBLY, Oxygen equipment pressure operating control	1	BS	
	ATTACHING PARTS				
	AN3-4A	BOLT	2	BS	
	2W18-10	WASHER, Flat (NA) (89372)	2	BS	
	---*---				
-15	14790	. CONTROL VALVE (ARO) (03990)	1	BS	
-16	AN816-5-4D	. NIPPLE	1	BS	
-17	AN911-1D	. NIPPLE	1	BS	
-18	AN917-1D	. TEE	1	BS	
-19	AN816-6-2D	. NIPPLE	1	BS	
-20	FR-5-A1-110	. RELIEF VALVE (Bendix-Pioneer Central Division) (99251)	1	BS	
-21	AN816-5D	. NIPPLE	1	BS	
-22	225000-2	. DISCONNECT OUTLET (ESSX) (83533) (see figure 352A for breakdown)	1	BS	
-23	209-73355-7	HOSE ASSEMBLY, Liquid oxygen equipment	1	BS	
	R3800X-5-0126	. HOSE, Teflon (RF) (50599)	1	BS	
	225000-1	. DISCONNECT OUTLET (ESSX) (83533)(see figure 352A for breakdown)	1	BS	
-24	209-73358	FITTING, Liquid oxygen system overboard vent skin attaching	1	BS	
-25	209-73352-15	LINE ASSEMBLY, Liquid oxygen system from oxygen pressure control valve at fuselage station 29 to heat exchanger fitting end at fuselage station 27.25	1	BS	
-26	5018-301-1	HEAT EXCHANGER ASSEMBLY, Liquid oxygen (RYN) (01484) (supersedes 5018-301 (RYN) (01484) for future procurement)	1	BS	
	ATTACHING PARTS				
-27	AN3-4A	BOLT	2	BS	
-28	2W1AL16-20-63	WASHER, Plain (NA) (89372)	2	BS	
	---*---				
-29	209-73352-23	LINE ASSEMBLY, Liquid oxygen system from heat exchanger fitting end at fuselage station 39 to bulkhead elbow fitting at fuselage station 54.625	1	BS	
-30	AN833-5D	ELBOW	3	BS	
-31	AN901-5A	GASKET	6	BS	
-32	AN924-5D	NUT	3	BS	
-33	209-73352-19	LINE ASSEMBLY, Liquid oxygen system from bulkhead elbow fitting at fuselage station 51.375 to bulkhead elbow fitting at fuselage station 54.625	1	BS	
-34	209-73352-21	LINE ASSEMBLY, Liquid oxygen system from bulkhead elbow fitting at fuselage station 54.375 to bulkhead elbow fitting at fuselage station 71.75	1	FX	
	209-73352-25	LINE ASSEMBLY, Liquid oxygen system from bulkhead elbow fitting at fuselage station 54.375 to bulkhead elbow fitting at fuselage station 71.75	1	FR	
-35	R3805-5-0094	LINE ASSEMBLY (RF) (50599)	1	BS	
-36	209-73370	REGULATOR ASSEMBLY, Oxygen equipment	1	BS	
	2867-7B-C1	. REGULATOR, Automatic positive pressure diluter demand (GFP) (Bendix-Pioneer Central Division) (99251) (for breakdown see Technical Manual AN 03-50A-49)	1	BS	
	AN816-5D	. NIPPLE	1	BS	
-37	181-73307-11	SUPPORT ASSEMBLY, Oxygen regulator fuselage station 75 (supersedes 181-73307 for future procurement)	1	BS	
	ATTACHING PARTS				
	AN365-832	NUT	4	BS	
	2W18-8L	WASHER, Flat (NA) (89372)	8	BS	
	AN526-832R8	SCREW	4	BS	
	---*---				
	181-73314	. SUPPORT, Oxygen regulator	1	BS	
	181-73315	. BRACKET, Oxygen regulator	1	BS	
	209-73317	. CLAMP ASSEMBLY, Oxygen regulator fuselage station 75 (make from 902-375-2 (MAR) (98625))	1	BS	
	AN365-832	. NUT	3	BS	
	2W18-8	. WASHER, Flat (NA) (89372)	5	BS	
	AN526-832R8	. SCREW	3	BS	
-38	AN6003T12A	TUBE ASSEMBLY	1	BS	
	AN737RM38	CLAMP	2	BS	

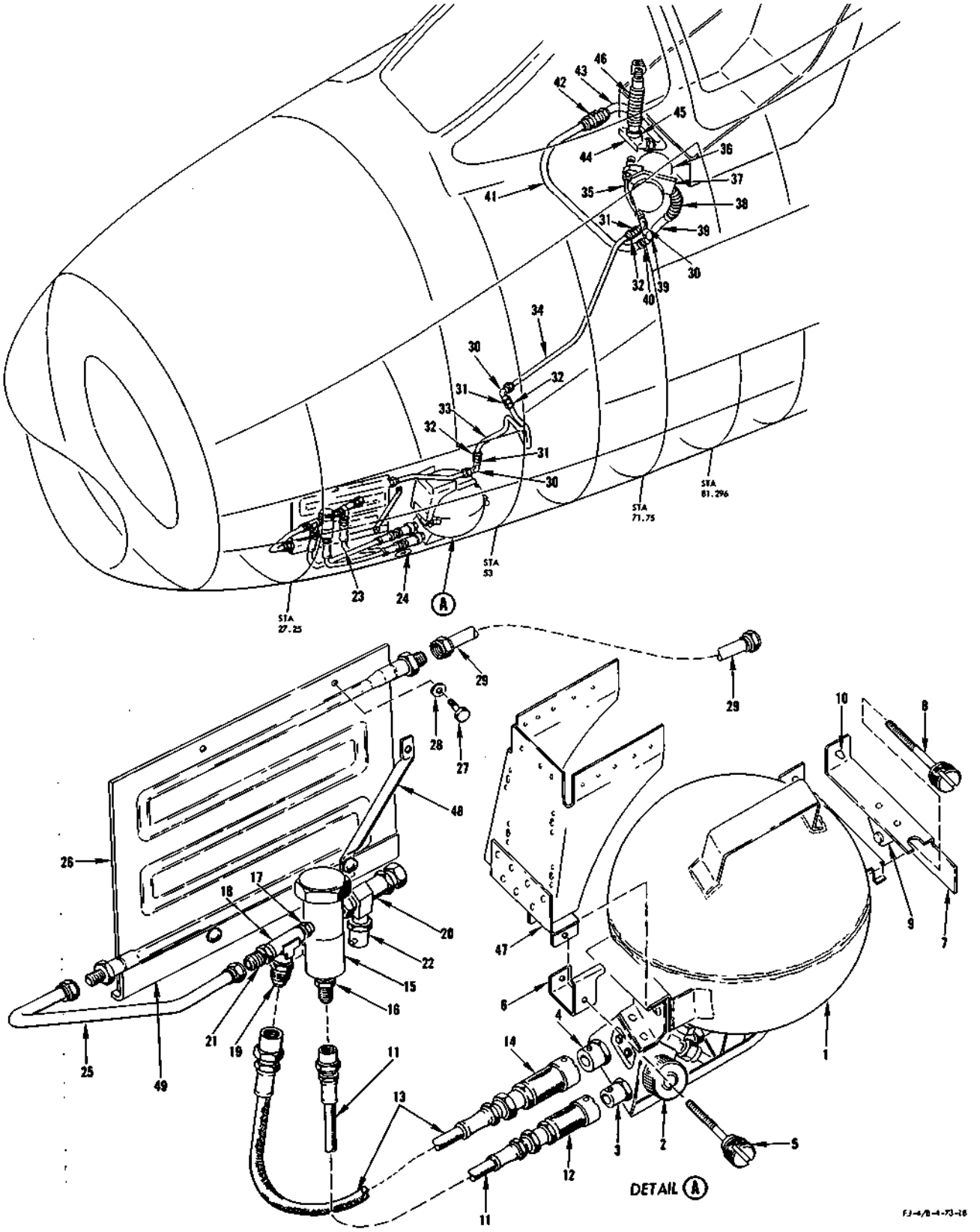

FIGURE 352 - LIQUID OXYGEN - APPLICABLE TO AIRCRAFT CODED (BS)

LIQUID OXYGEN - APPLICABLE TO AIRCRAFT CODED (BS)

FIGURE & INDEX NO.	PART NUMBER	1 2 3 4 5 6 7 NOMENCLATURE	UNITS PER ASSY.	USABLE ON CODE	S/C NO.
352-39	181-73310-49	LINE ASSEMBLY, Oxygen breathing tube upper	1	KV	
	181-73310-63	LINE ASSEMBLY, Oxygen breathing tube upper	1	FL	
-40	3H2-12-15	HOSE (NA) (89372)	1	BS	
	ATTACHING PARTS				
	AN737RM38	CLAMP	2	BS	
	---*---				
-41	181-73310-45	LINE ASSEMBLY, Oxygen breathing tube forward	1	BS	
-42	AN832-12D	UNION	1	BS	
	AN901-12A	GASKET	1	BS	
	AN924-12D	NUT	1	BS	
-43	181-73310-35	LINE ASSEMBLY, Oxygen breathing tube aft	1	BS	
-44	181-73313	FITTING, Pilots oxygen system fuselage station 86 tube	1		
-45	194-73311	COLLAR, Ejection seat oxygen tube (supersedes 181-73311 for future procurement)	1	BS	
	ATTACHING PARTS				
	AN742D24	CLAMP	1	BS	
	AN520-10R8	SCREW	1	BS	
	2W18-10L	WASHER, Flat (NA) (89372)	2	BS	
	AN365-1032	NUT	1	BS	
	---*---				
-46	D100-528	TUBE ASSEMBLY, Oxygen breathing and radio (DARL) (83452) (interchangeable with 208-2 (Aero Tube Co) (98672)	1	BS	
-47	209-73356	BRACKET ASSEMBLY, Liquid oxygen system flask mounting	1	BS	
-48	209-73368	SUPPORT ASSEMBLY, Liquid oxygen system heat exchanger	1	BS	
	ATTACHING PARTS				
	AN520-10R12	SCREW	1	BS	
	AN520-10R14	SCREW	1	BS	
	AN365-1032	NUT	2	BS	
	2W18-10	WASHER, Flat (NA) (89372)	4	BS	
	---*---				
-49	209-73369	STRIKER, Liquid oxygen heat exchanger	1	BS	
	ATTACHING PARTS				
	AN520-10R10	SCREW	1	BS	
	AN365-1032	NUT	1	BS	
	2W18-10	WASHER, Flat (NA) (89372)	2	BS	
	---*---				

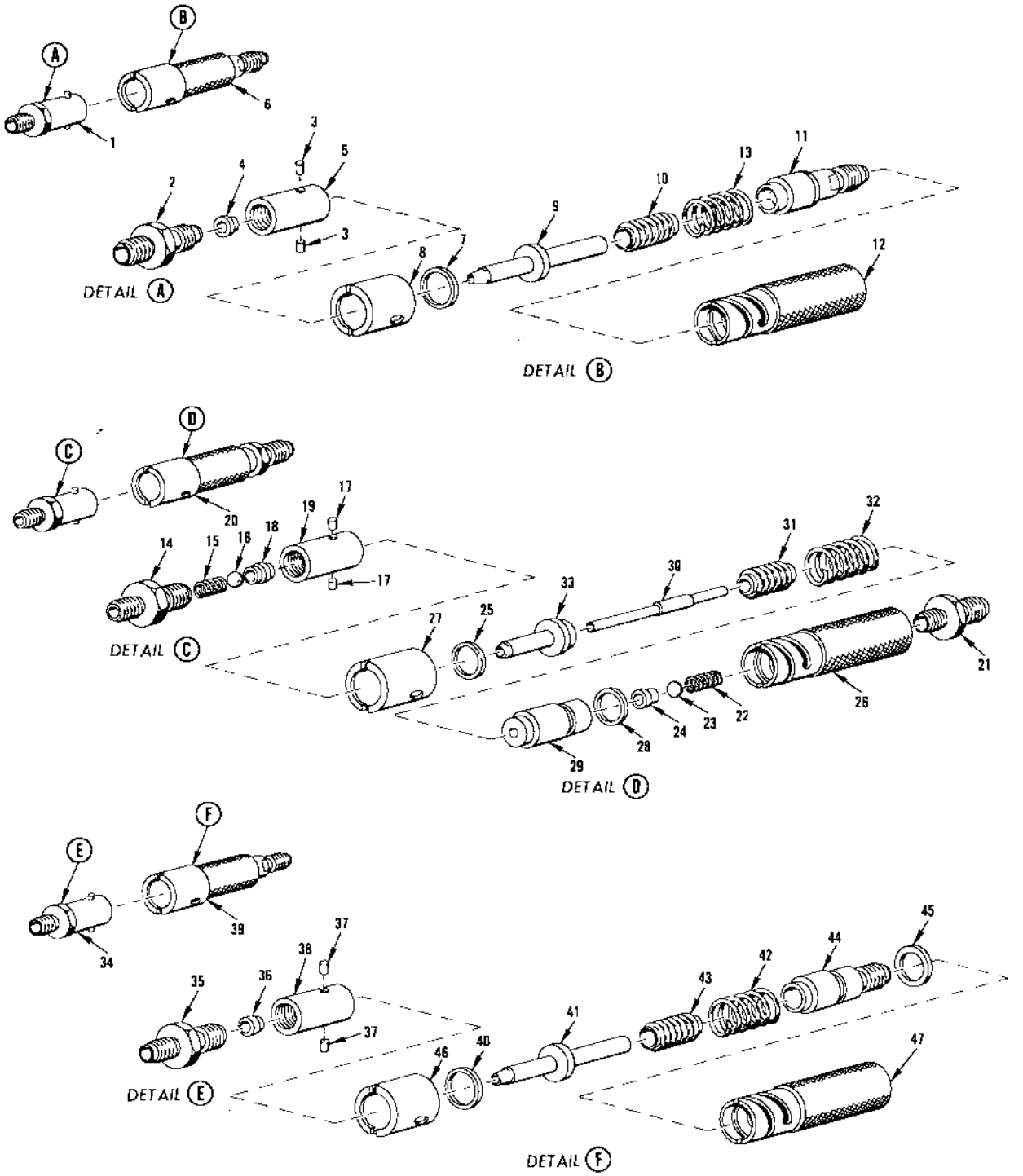

FIGURE 352A - LIQUID OXYGEN QUICK DISCONNECT 70 PSI NOMINAL PRESSURE COUPLINGS

LIQUID OXYGEN QUICK DISCONNECT 70 PSI NOMINAL PRESSURE COUPLINGS

FIGURE & INDEX NO.	PART NUMBER	1 2 3 4 5 6 7 NOMENCLATURE	UNITS PER ASSY.	USABLE ON CODE	S/C NO.
352A-1	200000-2	COUPLING, Liquid oxygen quick disconnect non-self sealing 70 psi nominal pressure (ESSX) (83533) (see figure 352 for next assembly)	1	BS	
-2	200003	. FITTING, Coupling liquid oxygen quick disconnect (ESSX) (83533)	1	BS	
-3	59009	. PIN, Valve quick disconnect (ESSX) (83533)	2	BS	
-4	199009	. SEAT, Coupling liquid oxygen quick disconnect (ESSX) (83533)	1	BS	
-5	200001	. BODY, Coupling liquid oxygen quick disconnect (ESSX) (83533)	1	BS	
-6	200000-1	COUPLING, Liquid oxygen quick disconnect non-self sealing 70 psi nominal pressure (ESSX) (83533) (see figure 352 for next assembly)	1	BS	
-7	5000-68-W	. RETAINING RING, Truarc (WKI) (79136)	1	BS	
-8	200007	. CAP SLEEVE, Liquid oxygen quick disconnect (ESSX) (83533)	1	BS	
-9	200006	. POPPET, Coupling liquid oxygen quick disconnect (ESSX) (83533)	1	BS	
-10	199014	. BELLOWS (ESSX) (83533)	1	BS	
-11	200005	. FITTING, Coupling liquid oxygen quick disconnect (ESSX) (83533)	1	BS	
-12	200008	. SLEEVE, Coupling liquid oxygen quick disconnect (ESSX) (83533)	1	BS	
-13	199000-2	COUPLING, Liquid oxygen quick disconnect self-sealing 70 psi nominal pressure (ESSX) (83533) (see figure 352 for next assembly)	1	BS	
-14	199003	. SPRING HOUSING, Coupling liquid oxygen quick disconnect (ESSX) (83533)	1	BS	
-15	59015	. SPRING, Valve quick disconnect (ESSX) (83533)	1	BS	
-16	AF216CP18	. BALL (Air Force Drawing) (88042)	1	BS	
-17	199004	. PIN, Coupling liquid oxygen quick disconnect	2	BS	
-18	199002	. SEAT, Coupling liquid oxygen quick disconnect (ESSX) (83533)	1	BS	
-19	199001	. BODY, Coupling liquid oxygen quick disconnect (ESSX) (83533)	1	BS	
-20	199000-1	COUPLING, Liquid oxygen quick disconnect self-sealing 70 psi nominal pressure (ESSX) (83533) (see figure 352 for next assembly)	1	BS	
-21	199012	. SPRING HOUSING, Coupling liquid oxygen quick disconnect (ESSX) (83533)	1	BS	
-22	59015	. SPRING, Valve quick disconnect (ESSX) (83533)	1	BS	
-23	AF216CP18	. BALL (Air Force drawing) (88042)	1	BS	
-24	199009	. SEAT, Coupling liquid oxygen quick disconnect (ESSX) (83533)	1	BS	
-25	5000-68-W	. RETAINING RING, Truarc (WKI) (79136)	1	BS	
-26	199008	. SLEEVE, Coupling liquid oxygen quick disconnect (ESSX) (83533)	1	BS	
-27	199007	. CAP, Sleeve liquid oxygen quick disconnect (ESSX) (83533)	1	BS	
-28	200012	. RING, Friction (ESSX) (83533)	1	BS	
-29	199010	. BODY, Coupling liquid oxygen quick disconnect (ESSX) (83533)	1	BS	
-30	199015	. STEM, Coupling liquid oxygen quick disconnect (ESSX) (83533)	1	BS	
-31	199014	. BELLOWS (ESSX) (83533)	1	BS	
-32	199013	. SPRING (ESSX) (83533)	1	BS	
-33	199006	. POPPET COUPLING, Liquid oxygen quick disconnect (ESSX) (83533)	1	BS	
-34	225000-2	COUPLING, Liquid oxygen quick disconnect non-self-sealing 70 psi nominal pressure (ESSX) (83533) (see figure 352 for breakdown)	1	BS	
-35	200018	. FITTING, Coupling liquid oxygen quick disconnect (ESSX) (83533)	1	BS	
-36	199009	. SEAT, Coupling liquid oxygen quick disconnect (ESSX) (83533)	1	BS	
-37	59009	. PIN, Valve quick disconnect (ESSX) (83533)	2	BS	
-38	200001	. BODY, Coupling liquid oxygen quick disconnect (ESSX) (83533)	1	BS	
-39	225000-1	COUPLING, Liquid oxygen quick disconnect non-self-sealing 70 psi nominal pressure (ESSX) (83533) (see figure 352 for next assembly)	1	BS	
-40	5000-68-W	. RETAINING RING, Truarc (WKI) (79136)	1	BS	
-41	200006	. POPPET, Coupling liquid oxygen quick disconnect (ESSX) (83533)	1	BS	
-42	199013	. SPRING (ESSX) (83533)	1	BS	
-43	199014	. BELLOWS (ESSX) (83533)	1	BS	
-44	200017	. FITTING, Coupling liquid oxygen quick disconnect (ESSX) (83533)	1	BS	
-45	200012	. RING, Friction (ESSX) (83533)	1	BS	
-46	200007	. CAP, Sleeve liquid oxygen quick disconnect (ESSX) (83533)	1	BS	
-47	200008	. SLEEVE, Coupling liquid oxygen quick disconnect (ESSX) (83533)	1	BS	

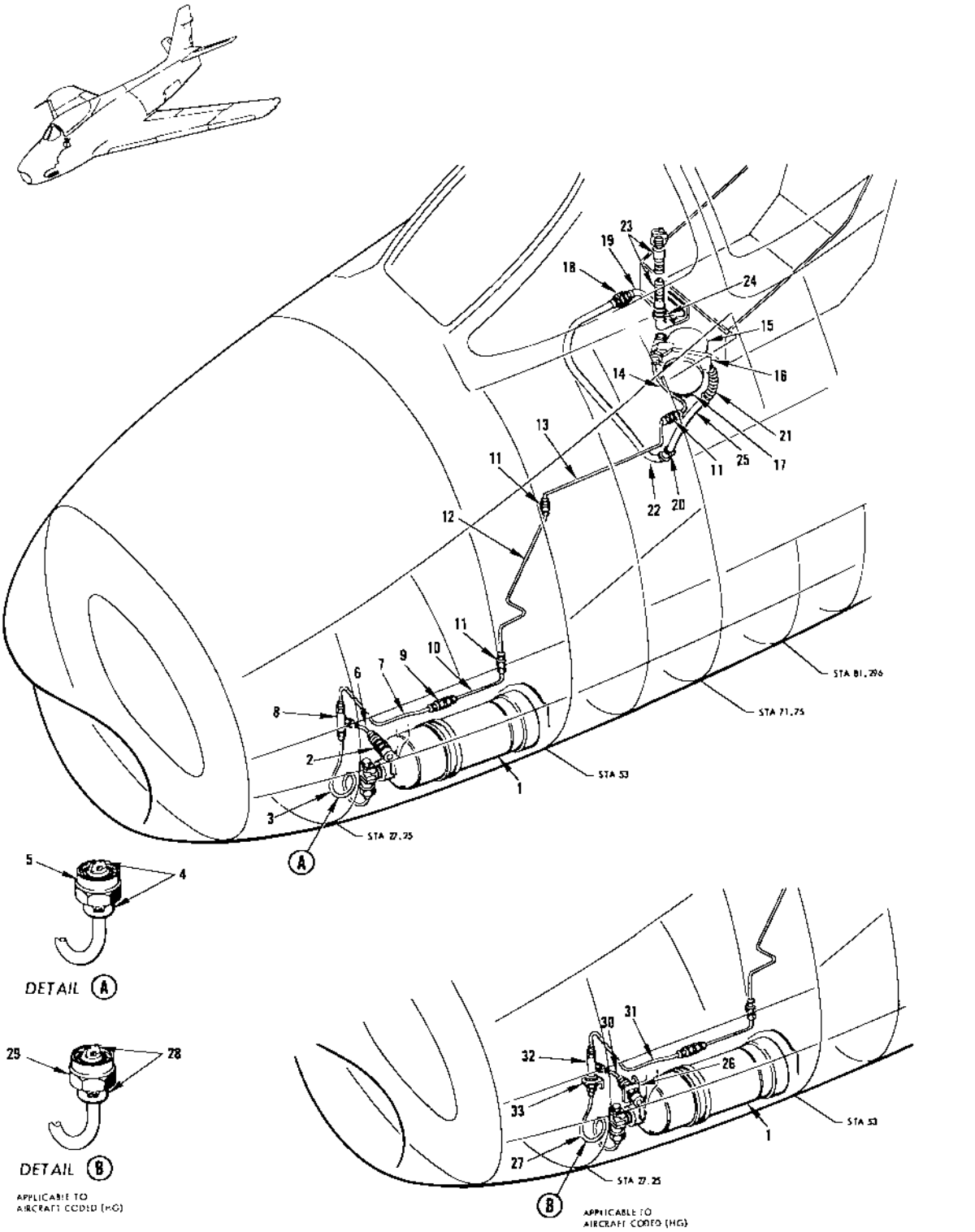

FIGURE 353 - GASEOUS OXYGEN - APPLICABLE TO AIRCRAFT CODED (BR)

GASEOUS OXYGEN - APPLICABLE TO AIRCRAFT CODED (BR)

FIGURE & INDEX NO.	PART NUMBER	1 2 3 4 5 6 7 NOMENCLATURE	UNITS PER ASSY.	USABLE ON CODE	S/C NO.
353-1	SK1084-514	CYLINDER, Oxygen (GFP)	1	BR	357
-2	3409	FILLER ASSEMBLY, High pressure oxygen (RYY) (86831) (supersedes 3279 (RYY) (86831) for future procurement)	1	BR	357
-3	181-73310-3	LINE ASSEMBLY, Oxygen cylinder valve	1	AM	357
-4	181-73309	. ADAPTER, Oxygen cylinder valve	1	AM	357
-5	156-73314	. NUT, Oxygen cylinder valve	1	AM	357
	AN6227-3	. PACKING	1	AM	357
-6	181-73310-7	LINE ASSEMBLY, Oxygen filler	1	AM	357
-7	181-73310-11	LINE ASSEMBLY, Oxygen check valve forward	1	AM	357
	755-3-2-6	CLAMP (AP) (00502)	5	AM	357
	AN520-10R10	SCREW	5	AM	357
	2W18-10	WASHER, Flat (NA) (89372)	10	AM	357
	AN365-1032	NUT	5	AM	357
-8	AN795-3	TEE	1	AM	357
-9	AN6014-1	VALVE	1	BR	357
-10	181-73310-15	LINE ASSEMBLY, Oxygen check valve	1	BR	357
-11	160-73302-3	FITTING, Oxygen system fuselage station 158 bulkhead (supersedes 160-73302 for future procurement)	3	BR	357
	AN924-3D	NUT	3	BR	357
	AN961-616	WASHER	6	BR	357
-12	209-73310-3	LINE ASSEMBLY, Oxygen bulkhead union station 51 aft and up to bulkhead union station 56	1	BR	357
-13	181-73310-59	LINE ASSEMBLY, Oxygen distributor valve intermediate	1	BR	357
-14	181-73310-27	LINE ASSEMBLY, Oxygen distributor valve aft	1	BR	357
-15	2867-B1	REGULATOR, Automatic positive pressure diluter demand (GFP)	1	BR	357
	AN515-8R7	SCREW	3	BR	357
	2W18-8L	WASHER, Flat (NA) (89372)	3	BR	357
-16	181-73307-11	SUPPORT ASSEMBLY, Oxygen regulator station 75 (supersedes 181-73307 for future procurement)	1	BR	357
	ATTACHING PARTS				
	AN526-832R8	SCREW	4	BR	357
	2W18-8L	WASHER, Flat (NA) (89372)	8	BR	357
	AN365-832	NUT	4	BR	357
	181-73314	. SUPPORT, Oxygen regulator	1	BR	357
	181-73315	. BRACKET, Oxygen regulator	1	BR	357
-17	209-73317	. CLAMP ASSEMBLY, Oxygen regulator station 75 (make from 902-375 (MAR) (98625)	1	BR	357
	AN526-832R8	. SCREW	3	BR	357
	2W18-8	. WASHER, Flat (NA) (89372)	5	BR	357
	AN365-832	. NUT	3	BR	357
-18	AN832-12D	UNION	1	BR	357
	AN924-12D	NUT	1	BR	357
	2W18-1716	WASHER, Flat (NA) (89372)	1	BR	357
-19	181-73310-35	LINE ASSEMBLY, Oxygen breathing tube aft	1	BR	357
-20	3H2-12-15	HOSE (NA) (89372)	1	BR	357
	AN737RM38	CLAMP	2	BR	357
-21	AN6003T12A	TUBE ASSEMBLY	1	BR	357
	AN737RM38	CLAMP	2	BR	357
-22	181-73310-45	LINE ASSEMBLY, Oxygen breathing tube forward	1	BR	357
-23	D100-528	TUBE ASSEMBLY, Oxygen breathing and radio (DARL) (83452) (interchangeable with AT208-2 (Aero-Tube Co) (98672))	1	BR	357
-24	194-73311	COLLAR, Ejection seat oxygen tube (supersedes 181-73311 for future procurement)	1	BR	357
-25	181-73310-49	LINE ASSEMBLY, Oxygen breathing tube upper	1	BR	357
	755-12-2-8	CLAMP (AP) (00502)	1	BR	357
	AN520-10R10	SCREW	1	BR	357
	2W18-10L	WASHER, Flat (NA) (89372)	1	BR	357
	AN365-1032	NUT	1	BR	357
-26	194-73310	SUPPORT, Oxygen filler assembly	1	BR	357
-27	209-73310-7	LINE ASSEMBLY, Tee station 33 to oxygen bottle	1	HG	357
-28	181-73309	. ADAPTER, Oxygen cylinder valve	1	HG	357
-29	156-73314	. NUT, Oxygen cylinder valve	1	HG	357
	AN6227-3	. PACKING	1	HG	357
-30	209-73310-5	LINE ASSEMBLY, Oxygen filler valve to tee station 33	1	HG	357
-31	209-73310-9	LINE ASSEMBLY, Tee station 33 aft to check valve	1	HG	357
-32	209-73313-3	FITTING, Oxygen system pilot breathing (supersedes 209-73312 for future procurement)	1	HG	357
	AN924-3D	NUT	1	HG	357
	2W18-616	WASHER, Flat (NA) (89372)	2	HG	357
-33	209-73311	CLIP, Oxygen system fitting support fuselage station 33.625 LH	1	HG	357
	AN520-10R10	SCREW	2	HG	357
	2W18-10L	WASHER, Flat (NA) (89372)	4	HG	357
	AN365-1032	NUT	2	HG	357

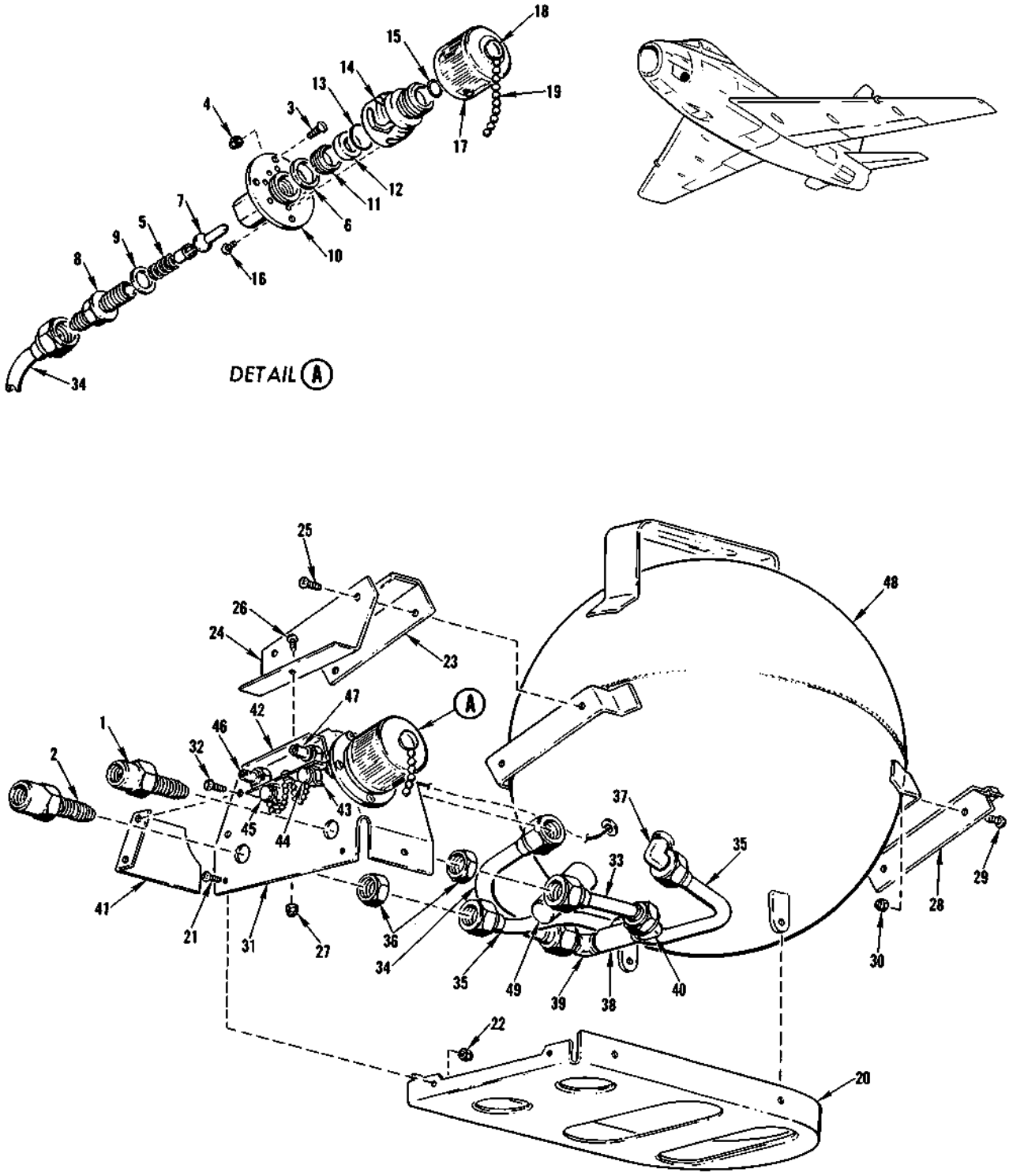

FIGURE 354 - LIQUID OXYGEN CONTAINER AND FILLER VALVE - APPLICABLE TO AIRCRAFT CODED (BS)

LIQUID OXYGEN CONTAINER AND FILLER VALVE - APPLICABLE TO AIRCRAFT CODED (BS)

FIGURE & INDEX NO.	PART NUMBER	1	2	3	4	5	6	7	NOMENCLATURE	UNITS PER ASSY.	USABLE ON CODE	S/C NO.
354	14460								FIVE LITER LIQUID OXYGEN CONVERTER INSTALLATION (ARO) (03990) (see figure 352 for next assembly)	1	BS	
	900075	.							GENERAL ASSEMBLY, Five liter liquid oxygen converter (ARO) (03990)	1	BS	
-1	B11523	.	.						BULKHEAD FITTING (ARO) (03990)	1	BS	
-2	B11537	.	.						BULKHEAD FITTING (ARO) (03990)	1	BS	
	900095	.	.						VALVE AND CAP ASSEMBLY, Male filler (ARO) (03990)	1	BS	
	ATTACHING PARTS											
-3	AN526C1032-7	.	.						SCREW	4	BS	
-4	900060	.	.						NUT, Hex (ARO) (03990)	4	BS	
	---+---											
	900188	.	.	.					FILLER VALVE ASSEMBLY (ARO) (03990)	1	BS	
-5	11109	.	.	.	.				SPRING (ARO) (03990)	1	BS	
-6	13939	.	.	.	.				PACKING, Preformed (ARO) (03990)	1	BS	
-7	13949	.	.	.	.				VALVE (ARO) (03990)	1	BS	
	900189	.	.	.	.				ADAPTER AND FLANGE ASSEMBLY (ARO) (03990)	1	BS	
-8	900041	.	.	.	.	.			ADAPTER (ARO) (03990)	1	BS	
-9	900198	.	.	.	.	.			ADAPTER GASKET (ARO) (03990)	1	BS	
-10	13948	.	.	.	.	.			FLANGE BODY (ARO) (03990)	1	BS	
	900191	.	.	.	.				BODY AND SEAT ASSEMBLY (ARO) (03990)	1	BS	
-11	12954	.	.	.	.	.			RING, Packing retainer (ARO) (03990)	1	BS	
-12	13798	.	.	.	.	.			DISK, Valve (ARO) (03990)	1	BS	
-13	900587	.	.	.	.	.			WASHER (ARO) (03990)	1	BS	
-14	13799	.	.	.	.	.			BODY, Filler valve (ARO) (03990)	1	BS	
-15	900187	.	.	.	.	.			"O" RING, Teflon (ARO) (03990)	1	BS	
-16	AN510B5-5	.	.	.	.				SCREW	8	BS	
	900594	.	.	.					SEAL ASSEMBLY, Male filler valve (ARO) (03990)	1	BS	
-17	B11114	.	.	.	.				COVER (ARO) (03990)	1	BS	
	900591	.	.	.	.				CAP AND SEAL ASSEMBLY, Filler valve (ARO) (03990)	1	BS	
	900592	.	.	.	.	.			CAP, Filler valve (ARO) (03990)	1	BS	
	900593	.	.	.	.	.			SEAL, Cap filler valve (ARO) (03990)	1	BS	
-18	A12918	.	.	.	.				SCREW (ARO) (03990)	1	BS	
-19	901378	.	.	.	.				CHAIN (ARO) (03990)	1	BS	
-20	900028	.	.						BASE (ARO) (03990)	1	BS	
	ATTACHING PARTS											
-21	AN526-C632-6	.	.						SCREW	5	BS	
-22	900061	.	.						NUT, Hex (ARO) (03990)	5	BS	
	---+---											
-23	900031	.	.						ANGLE, Mounting (ARO) (03990)	1	BS	
-24	900067	.	.						ANGLE, Panel mounting (ARO) (03990)	1	BS	
	ATTACHING PARTS											
-25	AN526C1032-7	.	.						SCREW	2	BS	
-26	AN526-C632-6	.	.						SCREW	1	BS	
-27	900061	.	.						NUT, Hex (ARO) (03990)	1	BS	
	---+---											
-28	900051	.	.						MOUNTING ANGLE AND LOCKING ASSEMBLY (ARO) (03990)	1	BS	
	ATTACHING PARTS											
-29	AN509C10-6	.	.						SCREW	4	BS	
-30	900060	.	.						NUT, Hex (ARO) (03990)	4	BS	
	---+---											
-31	900066	.	.						PANEL, Installation fitting (ARO) (03990)	1	BS	
	ATTACHING PARTS											
-32	AN515PB4-5	.	.						SCREW	2	BS	
	---+---											
-33	900072	.	.						LINE ASSEMBLY, External supply tube and fittings (ARO) (03990)	1	BS	
-34	900073	.	.						LINE ASSEMBLY, External fill tube and fittings (ARO) (03990)	1	BS	
-35	900081	.	.						LINE ASSEMBLY, External vent and build-up tube and fittings (ARO) (03990)	1	BS	
-36	AN924-5D	.	.						NUT	2	BS	
-37	AN822-5D	.	.						ELBOW	1	BS	
	900087	.	.						TEE ASSEMBLY, Fill and supply tee and fittings (ARO) (03990)	1	BS	
-38	900045	.	.	.					FITTING, Fill and supply tee (ARO) (03990)	1	BS	
-39	AN822-5D	.	.	.					ELBOW	1	BS	
-40	AN823-5D	.	.	.					ELBOW	1	BS	
-41	900088	.	.						PANEL ASSEMBLY, Guard and clinch nuts (ARO) (03990)	1	BS	
	900084	.	.	.					PANEL, Guard (ARO) (03990)	1	BS	
	900089	.	.	.					NUT, Hex (ARO) (03990)	2	BS	
	900091	.	.						ELECTRICAL CONNECTOR GUARD DUST CAP AND CLIP ASSEMBLY (ARO) (03990)	1	BS	
-42	900078	.	.	.					GUARD (ARO) (03990)	1	BS	
-43	900090	.	.	.					CLIP (ARO) (03990)	2	BS	
-44	900092	.	.	.					CAP, "B" polarity dust (ARO) (03990)	1	BS	
-45	900093	.	.	.					CAP, "E" polarity dust (ARO) (03990)	1	BS	
-46	900085	.	.						CONNECTOR ASSEMBLY, Dage "DM" series panel mounting cable jack - "E" polarity (ARO) (03990)	1	BS	
-47	900086	.	.						CONNECTOR ASSEMBLY, Dage "DM" series panel mounting cable jack - "B" polarity (ARO) (03990)	1	BS	
-48	900077	.	.						CONVERTER EVACUATION ASSEMBLY (ARO) (03990)	1	BS	
-49	A12382	.	.	.					CAP, Evacuation (ARO) (03990)	1	BS	

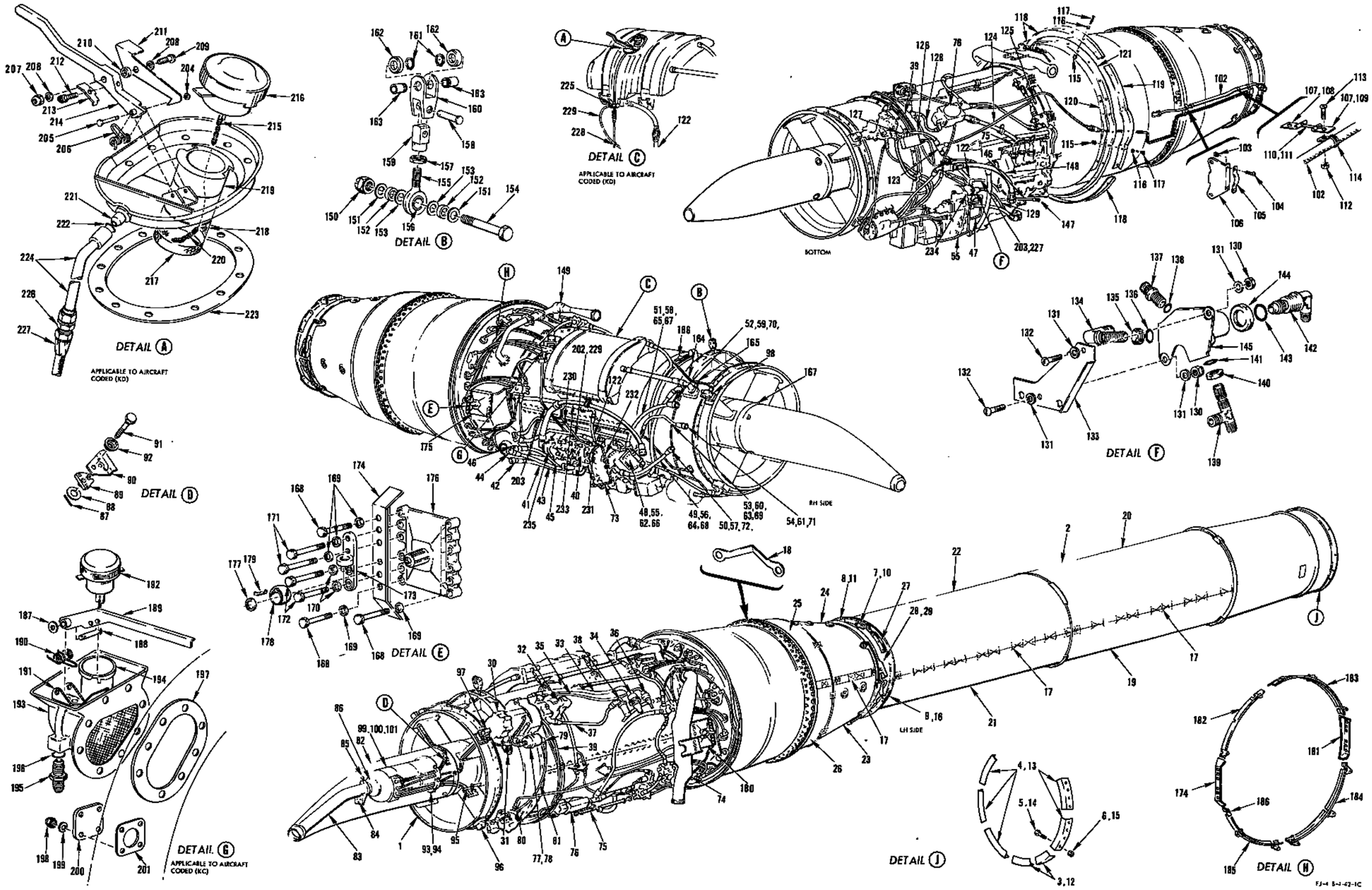

FIGURE 355 - ENGINE AND ACCESSORIES ASSEMBLY

ENGINE AND ACCESSORIES ASSEMBLY

FIGURE & INDEX NO.	PART NUMBER	1	2	3	4	5	6	7	NOMENCLATURE	UNITS PER ASSY.	USABLE ON CODE	S/C NO.
355	209-42001	*	ENGINE AND ACCESSORIES ASSEMBLY, Complete							1	AP	271
	209-42001-11	*	ENGINE AND ACCESSORIES ASSEMBLY, Complete							1	AQ	
-1	J65-W-4B	.	ENGINE, Jet (Wright Aeronautical Corp) (66640) (GFP) (for breakdown see Technical Manual AN 02B-35AAC-4) (may be used in lieu of J65-W-16A (Wright Aeronautical Corp) (66640) (GFP) with the following changes (replace W-4B tailcone and thermocouple harness lead from a W-16 or W-16A engine))							1	AP	
	J65-W-16	.	ENGINE, Jet (Wright Aeronautical Corp) (66640) (GFP) (for breakdown see Technical Manual AN 02B-35AAC-4)							1	GK	
	J65-W-16A	.	ENGINE, Jet (Wright Aeronautical Corp) (66640) (GFP) (for breakdown see Technical Manual AN 02B-35AAC-4) (interchangeable with J65-W-4B (Wright Aeronautical Corp) (66640) (GFP) (J65-W-4B tailcone and thermocouple harness lead is removed and replaced with J65-W-16 or J65-W-16A tailcone and harness lead)							1	GL	
-2	209-42002-101	.	TAIL PIPE ASSEMBLY, Engine exhaust (supersedes 209-42002 for future procurement)							1	AP	271
-3	209-42052	.	.	RESTRICTOR, Engine tail pipe temperature adjusting (22.5° arc) (used on 209-42002 only)						1	AP	271
	209-42031	.	.	RESTRICTOR, Engine tail pipe temperature adjusting (22.5° arc) (used on 209-4202-101 only)						1	AP	271
-4	209-42051-3	.	.	RESTRICTOR, Engine tail pipe temperature adjusting (45° arc) (used on 209-42002 only)						1	AP	271
	203-42032	.	.	RESTRICTOR, Engine tail pipe temperature adjusting (45° arc) (used on 209-42002-101 only)						1	AP	271
-5	5B18C4A	.	.	BOLT, 1/4-28 corrosion-resistant (NA) (89372)						16	AP	271
-6	0428AF10	.	.	NUT (DLR) (82831)						16	AP	271
-7	194-42007-1	.	.	ANGLE, Engine exhaust tail pipe radial support LH						1	AP	271
-8	194-42007-2	.	.	ANGLE, Engine exhaust tail pipe radial support RH						1	AP	271
	ATTACHING PARTS											
	5B18C7A	.	.	BOLT, 1/4-28 corrosion-resistant (NA) (89372)						4	AP	271
	0428AF10	.	.	NUT (DLR) (82831)						4	AP	271
	---*---											
	209-42002-135	.	.	WELD ASSEMBLY, Engine exhaust tail pipe assembly						1	AP	271
	209-42202-133	.	.	.	WELD SUBASSEMBLY, Engine exhaust tail pipe forward attaching					1	AP	271
-9	194-42004	.	.	.	.	RING ASSEMBLY, Engine exhaust tail pipe forward attaching				1	AP	271
	209-42002-137	.	.	.	WELD SUBASSEMBLY, Engine exhaust tail pipe forward attaching					1	AP	271
	209-42068	.	TAIL PIPE ASSEMBLY, Engine exhaust 21.875 diameter for J65-W-7 tailcone							1	GK	425
	209-42068-101	.	TAIL PIPE ASSEMBLY, Engine exhaust 21.875 diameter for J65-W-7 tailcone							1	GL	394A
-10	194-42007-1	.	.	ANGLE, Engine exhaust tail pipe radial support LH						1	AQ	
-11	194-42007-2	.	.	ANGLE, Engine exhaust tail pipe radial support RH						1	AQ	
	ATTACHING PARTS											
	5B18C7A	.	.	BOLT, 1/4-28 corrosion-resistant (NA) (89372)						4	AQ	
	0428AF10	.	.	NUT (DLR) (82831)						4	AQ	
	---*---											
-12	209-42031	.	.	RESTRICTOR, Engine tail pipe temperature adjusting (25.5° arc)						2	AQ	
-13	209-42032	.	.	RESTRICTOR, Engine tail pipe temperature adjusting (45° arc)						5	AQ	
-14	5B18C4A	.	.	BOLT, 1/4-28 corrosion-resistant (NA) (89372)						16	GL	
	5B18C4A	.	.	BOLT, 1/4-28 corrosion resistant (NA) (89372)						14	GK	425
-15	0428AF10	.	.	NUT (DLR) (82831)						16	GL	
	0428AF10	.	.	NUT (DLR) (82831)						14	GK	425
	209-42068-123	.	.	TAIL PIPE SUBASSEMBLY, Engine exhaust 21.875 diameter for J65-W-7 tailcone						1	GL	
	209-42068-23	.	.	TAIL PIPE SUBASSEMBLY, Engine exhaust 21.875 diameter for J65-W-7 tailcone						1	GK	425
	209-42068-121	.	.	.	SEAM WELD ASSEMBLY, Engine exhaust 21.875 diameter for J65-W-7 tailcone tail pipe subassembly					1	GL	
	209-42068-21	.	.	.	SEAM WELD ASSEMBLY, Engine exhaust 21.875 diameter for J65-W-7 tailcone tail pipe subassembly					1	GK	425
-16	209-42065	.	.	.	.	RING ASSEMBLY, Engine exhaust tail pipe				1	AQ	
-17	AN995N40	.	WIRE (nickel-chromium-iron alloy 0.040 inch diameter) (used to install all blankets)							AR		
-18	194-42009	.	CLIP, Engine tailcone insulation blanket retaining							11		
-19	BL-10615-15	*1	.	BLANKET INSULATION, Engine exhaust tail pipe (JM) (75165) (stainless steel)						1		
	BL-10615-5	*1	.	BLANKET INSULATION, Engine exhaust tail pipe (JM) (75165) (aluminum)						1		271
	13-21495-15	*1	.	BLANKET INSULATION, Engine exhaust tail pipe (TMH) (78741) (stainless steel)						1		
	13-21495-5	*1	.	BLANKET INSULATION, Engine exhaust tail pipe (TMH) (78741) (aluminum)						1		271
	5-54818-15	*1	.	BLANKET INSULATION, Engine exhaust tail pipe (FAHJ) (92526) (stainless steel)						1		
	5-54818-5	*1	.	BLANKET INSULATION, Engine exhaust tail pipe (FAHJ) (92526) (aluminum)						1		
-20	BL-10615-13	*2	.	BLANKET INSULATION, Engine exhaust tail pipe (JM) (75165) (stainless steel)						1		
	BL-10615-3	*2	.	BLANKET INSULATION, Engine exhaust tail pipe (JM) (75165) (aluminum)						1		271
	13-21495-13	*2	.	BLANKET INSULATION, Engine exhaust tail pipe (TMH) (78741) (stainless steel)						1		
	13-21495-3	*2	.	BLANKET INSULATION, Engine exhaust tail pipe (TMH) (78741) (aluminum)						1		
	5-54818-13	*2	.	BLANKET INSULATION, Engine exhaust tail pipe (FAHJ) (92526) (stainless steel)						1		
	5-54818-3	*2	.	BLANKET INSULATION, Engine exhaust tail pipe (FAHJ) (92526) (aluminum)						1		

ENGINE AND ACCESSORIES ASSEMBLY

FIGURE & INDEX NO.	PART NUMBER	1	2	3	4	5	6	7	NOMENCLATURE	UNITS PER ASSY.	USABLE ON CODE	S/C NO.
355-21	BL-10615-15	*3	.						BLANKET INSULATION, Engine exhaust tail pipe (JM) (75165) (stainless steel)	1	AP	
	BL-10615-5	*3	.						BLANKET INSULATION, Engine exhaust tail pipe (JM) (75165) (aluminum)	1	AP	271
	11-56923-15	*3	.						BLANKET INSULATION, Engine exhaust tail pipe (JM) (75165) (stainless steel)	1	AQ	
	13-21495-15	*3	.						BLANKET INSULATION, Engine exhaust tail pipe (TMH) (78741) (stainless steel)	1	AP	
	13-21495-5	*3	.						BLANKET INSULATION, Engine exhaust tail pipe (TMH) (78741) (aluminum)	1	AP	271
	13-21571-15	*3	.						BLANKET INSULATION, Engine exhaust tail pipe TMH) (78741) (stainless steel)	1	AQ	
	13-21571-5	*3	.						BLANKET INSULATION, Engine exhaust tail pipe (TMH) (78741) (aluminum)	1	AQ	
	3-55849-5	*3	.						BLANKET INSULATION, Engine exhaust tail pipe (FAHJ) (92526) (aluminum)	1	AQ	
	5-54818-15	*3	.						BLANKET INSULATION, Engine exhaust tail pipe (FAHJ) (92526) (SST)	1	AP	
	5-54818-5	*3	.						BLANKET INSULATION, Engine exhaust tail pipe (FAHJ) (92526) (aluminum)	1	AP	271
-22	BL-10615-13	*4	.						BLANKET INSULATION, Engine exhaust tail pipe (JM) (75165) (stainless steel)	1	AP	
	BL-10615-3	*4	.						BLANKET INSULATION, Engine exhaust tail pipe (JM) (75165) (aluminum)	1	AP	
	11-56923-13	*4	.						BLANKET INSULATION, Engine exhaust tail pipe (FAHJ) (92526) (stainless steel)	1	AQ	
	13-21495-13	*4	.						BLANKET INSULATION, Engine exhaust tail pipe (TMH) (78741) (stainless steel)	1	AP	
	13-21495-3	*4	.						BLANKET INSULATION, Engine exhaust tail pipe (TMH) (78741) (aluminum)	1	AP	271
	13-21571-13	*4	.						BLANKET INSULATION, Engine exhaust tail pipe (TMH) (78741) (stainless steel)	1	AQ	
	13-21571-3	*4	.						BLANKET INSULATION, Engine exhaust tail pipe (TMH) (78741) (aluminum)	1	AQ	
	3-55849-3	*4	.						BLANKET INSULATION, Engine exhaust tail pipe (FAHJ) (92526) (aluminum)	1	AQ	
	5-54818-13	*4	.						BLANKET INSULATION, Engine exhaust tail pipe (FAHJ) (92526) (stainless steel)	1	AP	
	5-54818-3	*4	.						BLANKET INSULATION, Engine exhaust tail pipe (FAHJ) (92526) (aluminum)	1	AP	271
-23	BL-10332-19	*5	.						BLANKET INSULATION, Engine cone (JM) (75165) (stainless steel)	1	AP	
	BL-10332-9	*5	.						BLANKET INSULATION, Engine cone (JM) (75165) (aluminum)	1	AP	271
	BL-10883-13	*5	.						BLANKET INSULATION, Engine cone (JM) (75165) (stainless steel)	1	AQ	
	BL-10833-3	*5	.						BLANKET INSULATION, Engine cone (JM) (75165) (aluminum)	1	AQ	
	1-55844-3	*5	.						BLANKET INSULATION, Engine cone (FAHJ) (92526) (aluminum)	1	AQ	
	13-21280-19	*5	.						BLANKET INSULATION, Engine cone (TMH) (78741) (stainless steel)	1	AP	
	13-21280-9	*5	.						BLANKET INSULATION, Engine cone (TMH) (78741) (aluminum)	1	AP	271
	13-21754-13	*5	.						BLANKET INSULATION, Engine cone (TMH) (78741) (stainless steel)	1	AQ	
	13-21754-3	*5	.						BLANKET INSULATION, Engine cone (TMH) (78741) (aluminum)	1	AQ	
	2-53789-19	*5	.						BLANKET INSULATION, Engine cone (FAHJ) (92526) (stainless steel)	1	AP	
	2-53789-9	*5	.						BLANKET INSULATION, Engine cone (FAHJ) (92526) (aluminum)	1	AP	271
	2-57942-13	*5	.						BLANKET INSULATION, Engine cone (FAHJ) (92526) (stainless steel)	1	AQ	
-24	BL-10332-17	*6	.						BLANKET INSULATION, Engine cone (JM) (75165) (stainless steel)	1	AP	
	BL-10332-7	*6	.						BLANKET INSULATION, Engine cone (JM) (75165) (aluminum)	1	AP	271
	BL-10883-15	*6	.						BLANKET INSULATION, Engine cone (JM) (75165) (stainless steel)	1	AQ	
	BL-10883-5	*6	.						BLANKET INSULATION, Engine cone (JM) (75165) (aluminum)	1	AQ	
	1-55844-5	*6	.						BLANKET INSULATION, Engine cone (FAHJ) (92526) (aluminum)	1	AQ	
	13-21280-17	*6	.						BLANKET INSULATION, Engine cone (TMH) (78741) (stainless steel)	1	AP	
	13-21280-7	*6	.						BLANKET INSULATION, Engine cone (TMH) (78741) (aluminum)	1	AP	271
	13-21754-15	*6	.						BLANKET INSULATION, Engine cone (TMH) (78741) (stainless steel)	1	AQ	
	13-21754-5	*6	.						BLANKET INSULATION, Engine cone (TMH) (78741) (aluminum)	1	AQ	
	2-53789-17	*6	.						BLANKET INSULATION, Engine cone (FAHJ) (92526) (stainless steel)	1	AP	
	2-53789-7	*6	.						BLANKET INSULATION, Engine cone (FAHJ) (92526) (aluminum)	1	AP	271
-25	BL-10332-13	*7	.						BLANKET INSULATION, Engine cone (JM) (75165) (stainless steel)	1	AP	
	BL-10332-3	*7	.						BLANKET INSULATION, Engine cone (JM) (75165) (aluminum)	1	AP	271
	BL-10883-17	*7	.						BLANKET INSULATION, Engine cone (JM) (75165) (stainless steel)	1	AQ	
	BL-10883-7	*7	.						BLANKET INSULATION, Engine cone (JM) (75165) (aluminum)	1	AQ	
	1-55844-7	*7	.						BLANKET INSULATION, Engine cone (FAHJ) (92526) (aluminum)	1	AQ	
	13-21280-13	*7	.						BLANKET INSULATION, Engine cone (TMH) (78741) (stainless steel)	1	AP	
	13-21280-3	*7	.						BLANKET INSULATION, Engine cone (TMH) (78741) (aluminum)	1	AP	271
	13-21754-17	*7	.						BLANKET INSULATION, Engine cone (TMH) (78741) (stainless steel)	1	AQ	
	13-21754-7	*7	.						BLANKET INSULATION, Engine cone (TMH) (78741) (aluminum)	1	AQ	
	2-53789-13	*7	.						BLANKET INSULATION, Engine cone (FAHJ) (92526) (stainless steel)	1	AP	
	2-53789-3	*7	.						BLANKET INSULATION, Engine cone (FAHJ) (92526) (aluminum)	1	AP	271
	2-57942-17	*7	.						BLANKET INSULATION, Engine cone (FAHJ) (92526) (stainless steel)	1	AQ	
-26	BL-10332-15	*8	.						BLANKET INSULATION, Engine cone (JM) (75165) (stainless steel)	1	AP	
	BL-10332-5	*8	.						BLANKET INSULATION, Engine cone (JM) (75165) (aluminum)	1	AP	271
	BL-10883-19	*8	.						BLANKET INSULATION, Engine cone (JM) (75165) (stainless steel)	1	AQ	
	BL-10883-9	*8	.						BLANKET INSULATION, Engine cone (JM) (75165) (aluminum)	1	AQ	
	1-55844-9	*8	.						BLANKET INSULATION, Engine cone (FAHJ) (92526) (aluminum)	1	AQ	
	13-21280-15	*8	.						BLANKET INSULATION, Engine cone (TMH) (78741) (stainless steel)	1	AP	
	13-21280-5	*8	.						BLANKET INSULATION, Engine cone (TMH) (78741) (aluminum)	1	AP	271
	13-21754-19	*8	.						BLANKET INSULATION, Engine cone (TMH) (78741) (stainless steel)	1	AQ	
	13-21754-9	*8	.						BLANKET INSULATION, Engine cone (TMH) (78741) (aluminum)	1	AQ	
	2-53789-15	*8	.						BLANKET INSULATION, Engine cone (FAHJ) (92526) (stainless steel)	1	AP	
	2-53789-5	*8	.						BLANKET INSULATION, Engine cone (FAHJ) (92526) (aluminum)	1	AP	271
	2-57492-19	*8	.						BLANKET INSULATION, Engine cone (FAHJ) (92526) (stainless steel)	1	AQ	
-27	194-42005		.						LINK, Engine exhaust tail pipe axial support	4	AP	271
	209-42066		.						LINK, Engine exhaust tail pipe axial support	4	AQ	
	ATTACHING PARTS											
	1N8-5		.						NUT, Castellated inconel "X" (NA) (89372)	12		
	2W17-516		.						WASHER, Corrosion-resistant (NA) (89372)	12		
	5B26-516-10		.						BOLT, Inconel "X" (NA) (89372)	12		

---*---

ENGINE AND ACCESSORIES ASSEMBLY

FIGURE & INDEX NO.	PART NUMBER	1	2	3	4	5	6	7	NOMENCLATURE	UNITS PER ASSY.	USABLE ON CODE	S/C NO.
355-28	194-42008-21	.							RING ASSEMBLY, Engine exhaust cone attaching (supersedes 194-42008 for future procurement)	1	AP	271
-29	209-42064	.							RING ASSEMBLY, Engine cone attaching	1	AQ	
	194-42043	.							SUPPORT, Engine combustion chamber fuel drain line	1		
-30	135897	.							GEAR BOX (Wright Aeronautical Corp) (66640)	1		
	135880	.							SPLINE SHAFT (Wright Aeronautical Corp) (66640)	1		
-31	AN814-4DL	.							PLUG AND BLEEDER	1		
	MS29512-4	.							GASKET	1		
	209-58013	.							HYDRAULIC EQUIPMENT INSTALLATION, Engine	1		
	209-58650-11	.	.						HYDRAULIC EQUIPMENT ASSEMBLY, Pump variable volume engine driven	1		
	ATTACHING PARTS											
	AN4044-1	.	.						GASKET	1		
	---*---											
-32	AA-65306-R	.	.	.					PUMP ASSEMBLY, Variable delivery (VI) (62983) (supersedes AA-60306-R (VI) (62983) for future procurement (interchangeable with AA-60306-RB (VI) (62983))	1		
	AN837-4D	.	.	.					ELBOW	1		
	AN6289-4	.	.	.					NUT	1		
	AN6291-4	.	.	.					RING	1		
	AN6290-4	.	.	.					GASKET	1		
	AN833-6D	.	.	.					ELBOW	1		
	AN6289-6	.	.	.					NUT	1		
	AN6291-6	.	.	.					RING	1		
	AN6290-6	.	.	.					GASKET	1		
-33	MS28741-12-0240	.	.						HOSE ASSEMBLY (No. 1 Flight Control System - Suction)	1		
	209-58401-15	.	.						TAG, Hydraulic hose assembly identification (No. 1 Flight Control System - Suction)	1		
-34	150-S1-12	.	.						COUPLING HALF, Self-sealing (AQ) (00624)	1		
	C155-25-12	.	.						NUT, Union (AQ) (00624)	1		
-35	MS28741-6-0290	.	.						HOSE ASSEMBLY (No. 1 Flight Control System - case drain)	1		
	209-58401-11	.	.						TAG, Hydraulic hose assembly identification (No. 1 Flight Control System - case drain)	1		
-36	150-S1-6	.	.						COUPLING HALF, Self-sealing (AQ) (00624)	1		
	C155-25-8	.	.						NUT, Union (AQ) (00624)	1		
-37	AN6292-8-14-1/2	.	.						HOSE ASSEMBLY (No. 1 Flight Control System - pressure)	1		
-38	AN815-8D	.	.						UNION	1		
	AN6290-8	.	.						GASKET	1		
	AN939D8	.	.						ELBOW	1		
	150-S1-8	.	.						COUPLING HALF, Self-sealing (AQ) (00624)	1		
	C155-25-8	.	.						NUT, Union (AQ) (00624)	1		
-39	MS28741-4-0490	.	.						HOSE ASSEMBLY (No. 1 Flight Control System - pump seal drain)	1		
	209-58650-21	.	.						HYDRAULIC EQUIPMENT ASSEMBLY, Pump variable volume engine driven	1		
	ATTACHING PARTS											
	AN4044-1	.	.						GASKET	1		
	---*---											
-40	AA-65036-R	.	.	.					PUMP ASSEMBLY, Variable delivery (VI) (62983) (supersedes AA-60306-R (VI) (62983) for future procurement) (interchangeable with AA-60306-RB (VI) (62983)	1		
	209-58122	.	.	.					FITTING, Hydraulic bulkhead 90° elbow	1		
	AN837-4D	.	.	.					ELBOW	1		
	AN6289-4	.	.	.					NUT	1		
	AN6291-4	.	.	.					RING	1		
	AN6290-4	.	.	.					GASKET	1		
	AN6289-6	.	.	.					NUT	1		
	AN6291-6	.	.	.					RING	1		
	AN6290-6	.	.	.					GASKET	1		
-41	MS28741-12-0134	.	.						HOSE ASSEMBLY (No. 2 Flight Control - suction)	1		
	AN6290-12	.	.						GASKET	2		
	AN941-12D	.	.						ELBOW	1		
	AN815-12D	.	.						UNION	1		
	209-58401-17	.	.						TAG, Hydraulic hose assembly identification (No. 2 Flight Control System - suction)	1		
-42	150-S1-12	.	.						COUPLING HALF, Self-sealing (AQ) (00624)	1		
	C155-25-12	.	.						NUT, Union (AQ) (00624)	1		
-43	MS28741-6-0190	.	.						HOSE ASSEMBLY (No. 2 Flight Control System - case drain)	1		
	209-58401-13	.	.						TAG, Hydraulic hose assembly identification (No. 2 Flight Control System - case drain)	1		
-44	150-S1-6	.	.						COUPLING HALF, Self-sealing (AQ) (00624)	1		
	C155-25-8	.	.						NUT, Union (AQ) (00624)	1		
-45	AN6292-8-27-1/2	.	.						HOSE ASSEMBLY (No. 2 Flight Control - pressure)	1		
-46	150-S1-8	.	.						COUPLING HALF, Self-sealing (AQ) (00624)	1		
	C155-25-8	.	.						NUT, Union (AQ) (00624)	1		
	209-58401-5	.	.						TAG, Hydraulic hose assembly identification (No. 2 Flight Control System - pressure)	1		
-47	209-47801-23	.	.						LINE ASSEMBLY, No. 2 Flight Control pump seal drain to lube system drain manifold	1		
	209-58650-31	.	.						HYDRAULIC EQUIPMENT ASSEMBLY, Pump variable volume engine driven (209-58650-31 together with attaching hoses and fittings is interchangeable with 209-58651 and its attaching hoses and fittings)	1	ET	

ENGINE AND ACCESSORIES ASSEMBLY

FIGURE & INDEX NO.	PART NUMBER	1	2	3	4	5	6	7	NOMENCLATURE	UNITS PER ASSY.	USABLE ON CODE	S/C NO.
355	ATTACHING PARTS											
	AN4044-1	.	.						GASKET	1	ET	
	---*---											
-48	AA-85306-R	.	.	.					PUMP ASSEMBLY, Variable delivery (VI) (62983) (supersedes AA-60306-R (VI) (62983) for future procurement) (interchangeable with AA-60306-RB (VI) (62983))	1	ET	
	209-58122	.	.	.					FITTING, Hydraulic bulkhead 90° elbow	1	ET	
	AN6290-6	.	.	.					GASKET	1	ET	
	AN6291-6	.	.	.					RING	1	ET	
	AN6289-6	.	.	.					NUT	1	ET	
	AN834-4D	.	.	.					TEE	1	ET	
	AN6290-4	.	.	.					GASKET	1	ET	
	AN6291-4	.	.	.					RING	1	ET	
	AN6289-4	.	.	.					NUT	1	ET	
-49	MS28741-12-0134	.	.						HOSE ASSEMBLY (Utility Hydraulic System - suction) (used on 209-58650-31)	1	ET	
	187-58363-5	.	.						TAG, Hydraulic hose assembly identification (utility suction)	1	ET	
-50	150-S1-12	.	.						COUPLING HALF, Self-sealing (AQ) (00624) (used on 209-58650-31)	1	ET	
	C155-25-12	.	.						NUT, Union (AQ) (00624) (used on 209-58650-31)	1	ET	
-51	AN6292-8-18-1/2	.	.						HOSE ASSEMBLY (Utility Hydraulic System - pressure) (used on 209-58650-31)	1	ET	
	181-58269-3	.	.						TAG, Hydraulic hose assembly identification (utility pressure)	1	ET	
-52	150-S1-8	.	.						COUPLING HALF, Self-sealing (AQ) (00624) (used on 209-58650-31)	1	ET	
	C155-25-8	.	.						NUT, Union (AQ) (00624) (used on 209-58650-31	1	ET	
-53	MS28741-6-0160	.	.						HOSE ASSEMBLY (Utility Hydraulic System - case drain) (used on 209-58650-31)	1	ET	
-54	150-S1-6	.	.						COUPLING HALF, Self-sealing (AQ) (00624) (used on 209-58650-31)	1	ET	
	C155-25-8	.	.						NUT, Union (AQ) (00624) (used on 209-58650-31)	1	ET	
	187-58368-19	.	.						TAG, Hydraulic hose assembly identification (utility case drain)	1	ET	
	209-58651	.	.						HYDRAULIC EQUIPMENT ASSEMBLY, Pump engine driven variable delivery (209-58651 together with attaching hoses and fittings is interchangeable with 209-58650-31 and its attaching hoses and fittings)	1	ET	
	ATTACHING PARTS											
	AN4044-1	.	.						GASKET	1	ET	
	---*---											
-55	66WT200-1	.	.	.					PUMP ASSEMBLY, Variable delivery (NYB) (43491)	1	ET	
	AN837-6D	.	.	.					ELBOW	1	ET	
	AN6290-6	.	.	.					GASKET	1	ET	
	AN6291-6	.	.	.					RING	1	ET	
	AN6289-6	.	.	.					NUT	1	ET	
	AN834-4D	.	.	.					TEE	1	ET	
	AN6290-4	.	.	.					GASKET	1	ET	
	AN6291-4	.	.	.					RING	1	ET	
	AN6289-4	.	.	.					NUT	1	ET	
	AN893-151D	.	.	.					REDUCER	1	ET	
	AN6290-10	.	.	.					GASKET	1	ET	
	AN833-8D	.	.	.					ELBOW	1	ET	
	AN6290-8	.	.	.					GASKET	1	ET	
	AN6291-8	.	.	.					RING	1	ET	
	AN6289-8D	.	.	.					NUT	1	ET	
	AN637-12D	.	.	.					ELBOW	1	ET	
	AN6290-12	.	.	.					GASKET	1	ET	
	AN6291-12	.	.	.					RING	1	ET	
	AN6289-12D	.	.	.					NUT	1	ET	
-56	MS28741-12-0127	.	.						HOSE ASSEMBLY (Utility Hydraulic System - suction) (used on 209-58651)	1	ET	
	187-58368-5	.	.						TAG, Hydraulic hose assembly identification (utility suction)	1	ET	
	AN815-12D	.	.						UNION (used on 209-58651)	1	ET	
	AN939-12D	.	.						ELBOW (used on 209-58651)	1	ET	
	AN6290-12	.	.						GASKET (used on 209-58651)	1	ET	
-57	150-S1-12	.	.						COUPLING HALF (AQ) (00624) (used on 209-58651)	1	ET	
	C155-25-12	.	.						NUT, Union (AQ) (00624) (used on 209-58651)	1	ET	
-58	AN6292-8-14-1/2	.	.						HOSE ASSEMBLY (Utility System - pressure) (used on 209-58651)	1	ET	
	181-58269-3	.	.						TAG, Hydraulic hose assembly identification (utility pressure)	1	ET	
	AN815-8D	.	.						UNION (used on 209-58651)	1	ET	
	AN939-8D	.	.						ELBOW (used on 209-58651)	1	ET	
	AN6290-8	.	.						GASKET (used on 209-58651)	1	ET	
-59	150-S1-8	.	.						COUPLING HALF, Self-sealing (AQ) (00624) (used on 209-58651)	1	ET	
	C155-25-8	.	.						NUT, Union (AQ) (00624) (used on 209-58651)	1	ET	
-60	MS28741-6-0113	.	.						HOSE ASSEMBLY (Utility System - case drain) (used on 209-58651)	1	ET	
	187-58368-19	.	.						TAG, Hydraulic hose assembly identification (utility case drain)	1	ET	
	AN815-6D	.	.						UNION (used on 209-58651)	1	ET	
	AN939-6D	.	.						ELBOW (used on 209-58651)	1	ET	
	AB6290-6	.	.						GASKET (used on 209-58651)	1	ET	
-61	150-S1-6	.	.						COUPLING HALF, Self-sealing (AQ) (00624) (used on 209-58651)	1	ET	
	C155-25-8	.	.						NUT, Union (AQ) (00624) (used on 209-58651)	1	ET	
	209-58645	.	.						HYDRAULIC EQUIPMENT ASSEMBLY, Pump engine driven variable delivery (209-58645 together with attaching hoses and fittings is interchangeable with 209-58652 and its attaching hoses and fittings)	1	FR	

ENGINE AND ACCESSORIES ASSEMBLY

FIGURE & INDEX NO.	PART NUMBER	1	2	3	4	5	6	7	NOMENCLATURE	UNITS PER ASSY.	USABLE ON CODE	S/C NO.
355-62	AA-65502-R-S404	.	.	.					PUMP, Hydraulic variable volume (VI) (62983) (E13560 (VI) (62983) may be used as an alternate)	1	FR	
	AN834-4D	.	.	.					TEE	1	FR	
	AN6290-4	.	.	.					GASKET	1	FR	
	AN6291-4	.	.	.					RING	1	FR	
	AN6289-4	.	.	.					NUT	1	FR	
-63	MS28741-6-0160	.	.	.					HOSE ASSEMBLY (Utility System - case drain)	1	FR	
	187-58368-19	.	.	.					TAG, Hydraulic hose assembly identification (utility case drain)	1	FR	
	AN833-6D	.	.	.					ELBOW	1	FR	
	AN6290-6	.	.	.					GASKET	1	FR	
	AN6291-6	.	.	.					RING	1	FR	
	AN6289-6	.	.	.					NUT	1	FR	
-64	MS28741-16-0122	.	.	.					HOSE ASSEMBLY (Utility System - suction)	1	FR	
	187-58368-5	.	.	.					TAG, Hydraulic hose assembly identification (utility suction)	1	FR	
	AN837-16D	.	.	.					ELBOW	1	FR	
	AN6290-16	.	.	.					GASKET	1	FR	
	AN6291-16	.	.	.					RING	1	FR	
	AN6289-16D	.	.	.					NUT	1	FR	
-65	AN6292-8-18-1/2	.	.	.					HOSE ASSEMBLY (Utility System - pressure)	1	FR	
	181-58269-3	.	.	.					TAG, Hydraulic hose assembly identification (utility pressure)	1	FR	
	AN4044-1	.	.						GASKET	1	FR	
	209-58652	.	.						HYDRAULIC EQUIPMENT ASSEMBLY, Pump engine driven variable delivery (209-58652 together with attaching hoses and fittings is intchg with 209-58645 and its attaching hoses and fittings)	1	FR	
-66	65WB06006-1	.	.	.					PUMP, Hydraulic variable volume (NYB) (43491) (supersedes 65WB06006 and is superseded by 65WB06006-2 for future procurement)	1	FR	
	65WB06006-2	.	.	.					PUMP, Hydraulic variable volume (NYB) (43491) (supersedes 65WB06006-1 for future procurement)	1	FR	
	AN834-4D	.	.	.					TEE	1	FR	
	AN6290-4	.	.	.					GASKET	1	FR	
	AN6291-4	.	.	.					RING	1	FR	
	AN6289-4	.	.	.					NUT	1	FR	
-67	AN6292-8-14-1/2	.	.	.					HOSE ASSEMBLY (Utility System - pressure)	1	FR	
	181-58269-3	.	.	.					TAG, Hydraulic hose assembly identification (utility pressure)	1	FR	
	AN893-16D	.	.	.					BUSHING	1	FR	
	AN6290-12	.	.	.					GASKET	1	FR	
	AN837-8D	.	.	.					ELBOW	1	FR	
	AN6290-8	.	.	.					GASKET	1	FR	
	AN6291-8	.	.	.					RING	1	FR	
	AN6289-8D	.	.	.					NUT	1	FR	
-68	601402-16D0182	.	.	.					HOSE ASSEMBLY (AQ) (00624) (utility system - suction) (supersedes MS28741-16-0174 for future procurement)	1	FR	
	187-58368-5	.	.	.					TAG, Hydraulic hose assembly identification (utility suction)	1	FR	
	AN833-16D	.	.	.					ELBOW	1	FR	
	AN6290-16	.	.	.					GASKET	1	FR	
	AN6291-16	.	.	.					RING	1	FR	
	AN6289-16D	.	.	.					NUT	1	FR	
-69	MS28741-6-0134	.	.	.					HOSE ASSEMBLY (Utility System - case drain)	1	FR	
	187-58368-19	.	.	.					TAG, Hydraulic hose assembly identification (utility case drain)	1	FR	
	AN833-6D	.	.	.					ELBOW	1	FR	
	AN6290-6	.	.	.					GASKET	1	FR	
	AN6291-6	.	.	.					RING	1	FR	
	AN6289-6	.	.	.					NUT	1	FR	
-70	150-S1-8	.	.						COUPLING HALF, Self-sealing (AQ) (00624)	1	FR	
	C155-25-8	.	.						NUT, Union (AQ) (00624)	1	FR	
	AN815-8D	.	.						UNION	1	FR	
	AN939-8D	.	.						ELBOW	1	FR	
	AN6290-8	.	.						GASKET	1	FR	
-71	150-S1-6	.	.						COUPLING HALF, Self-sealing (AQ) (00624)	1	FR	
	C155-25-8	.	.						NUT, Union (AQ) (00624)	1	FR	
	AN815-6D	.	.						UNION	1	FR	
	AN939-6D	.	.						ELBOW	1	FR	
	AN6290-6	.	.						GASKET	1	FR	
-72	150-S1-16	.	.						COUPLING HALF, Self-sealing (AQ) (00624)	1	FR	
	C155-25-16	.	.						NUT, Union (AQ) (00624)	1	FR	
-73	209-47801-19	.							LINE ASSEMBLY, Hydraulic utility pump seal drain to engine drain manifold	1	ET	
-74	209-47002	.							DUCT ASSEMBLY, Engine oil vapor outlet LH side	1		
	194-47006	.	.						FLANGE, Engine oil vapor duct connection	2		
-75	194-43717-101	.							ROD ASSEMBLY, Engine control system aft (see Surface and Secondary Controls)	1		
-76	No Number	.							TRANSMITTER, Fuel flow (GFP) (Navy Stock No. R88T1982-025)	1		
	MS29512-16	.							GASKET	1		
	194-51142	.							SWITCH INSTALLATION, Oil pressure instrument	1		
-77	SW-2A	.	.						SWITCH (UG) (61349) (see Electrical and Instrument)	1	NH	460
	AN515-8R8	.	.						SCREW	4	NH	
	AN960D8	.	.						WASHER	4	NH	
	194-51111	.	.						BRACKET, Oil pressure switch assembly of (supersedes 194-51109 for future procurement)	1	NH	460
-78	209-510117	.	.						TRANSMITTER ASSEMBLY, Oil pressure	1	ME	
	ST104H	.	.	.					TRANSMITTER (UG) (61349)	1	ME	

ENGINE AND ACCESSORIES ASSEMBLY

FIGURE & INDEX NO.	PART NUMBER	1	2	3	4	5	6	7	NOMENCLATURE	UNITS PER ASSY.	USABLE ON CODE	S/C NO.
355	AN365-832	.	.	.					NUT	4	ME	
	AN515-8R24	.	.	.					SCREW	4	ME	
	AN515-6R10	.	.	.					SCREW	4	ME	
	2W18-6L	.	.	.					WASHER, Flat (NA) (89372)	4	ME	
	2W18-8	.	.	.					WASHER, Flat (NA) (89372)	8	ME	
	2L7-2	.	.	.					LUG, Safety (NA) (89372)	1	ME	
	194-51115	.	.	.					SUPPORT, Oil pressure transmitter assembly of	1	ME	
	194-51115-3	.	.	.	.				SUPPORT SUBASSEMBLY, Oil pressure transmitter	1	ME	
	809-2	.	.	.	.				SHOCKMOUNT (RAI) (51116)	4	ME	
	194-51116	.	.	.					BRACKET, Oil pressure transmitter mounting	1	ME	
-79	AN833-4	.	.						ELBOW	1		
	AN6290-4	.	.						GASKET	1		
	AN924-4	.	.						NUT	1		
-80	AN837-4	.	.						ELBOW	1		
	AN6290-4	.	.						GASKET	1		
	AN924-4	.	.						NUT	1		
-81	MS28741-4-0184	.	.						HOSE ASSEMBLY (oil pressure - pump to switch)	1		
	194-51110	.	.						CLIP, Oil pressure flexible hose assembly	1		
	TA716-D8	.	.						CLAMP (THAS) (84971)	1		
	AN515-8R8	.	.						SCREW	1		
	AN960D8	.	.						WASHER	1		
	AN365-832	.	.						NUT	1		
-82	194-42015	.							COVER ASSEMBLY, Engine access starter-generator	1		
	194-42015-3	.	.						RIVET ASSEMBLY, Engine access starter-generator cover	1		
	194-42015-5	.	.	.					WELD ASSEMBLY, Engine access starter-generator cover	1		
	194-42017	.	.	.					INLET, Engine starter generator cooling air duct	1		
-83	194-42016	.	.	.					DUCT ASSEMBLY, Engine starter-generator	1		
-84	AN520-10R8	.	.						SCREW (bottom screw head facing forward)	3		
	2W18-10	.	.						WASHER, Flat (NA) (89372)	6		
	AN365-1032	.	.						NUT	1		
-85	AN737RM114	.	.						CLAMP	1		
-86	151-42019	.	.						SEAL, Generator air duct	1		
-87	194-42015-17	.	.						PIN, Engine access starter-generator cover assembly	4		
-88	2W1-17-18-32	.	.						WASHER, Plain (NA) (89372)	4		
-89	151-42013	.	.						SPACER ASSEMBLY, Engine accessory cover retainer	4		
-90	194-42021	.	.						SPRING ASSEMBLY, Engine accessory cover retainer	4		
-91	151-42006	.	.						BOLT, Engine accessory cover retainer	4		
-92	194-42020	.	.						WASHER, Engine starter-generator accessory cover retaining bolt	4		
-93	209-54049	.							CLAMP ASSEMBLY, Generator lead electrical (supersedes 209-54049-11 for future procurement)	1	LE	
	AN3-11A	.	.						BOLT	2	LE	
	AN3-12A	.	.						BOLT	1	LE	
	AN365-1032	.	.						NUT	3	LE	
	2W18-10M	.	.						WASHER, Flat (NA) (89372)	5	LE	
	209-54050-1	.	.						FAIRLEAD, Generator lead electrical	1	LE	
	209-54050-3	.	.						FAIRLEAD, Generator lead electrical	1	LE	
	320-63-750-SH	.	.						CLAMP (MAR) (98625)	1	LE	
-94	209-54049-11	.							CLAMP ASSEMBLY, Generator lead electrical (supersedes 209-54049 for future procurement)	1	KY	
	AN3-15A	.	.						BOLT	2	KY	
	AN3-16A	.	.						BOLT	1	KY	
	NAS43DD3-24	.	.						SPACER	1	KY	
	AN365-1032	.	.						NUT	3	KY	
	2W18-10M	.	.						WASHER, Flat (NA) (89372)	5	KY	
	209-54050-5	.	.						CLIP, Generator lead electrical clamp assembly	2	KY	
	209-54050-11	.	.						FAIRLEAD ASSEMBLY, Generator lead electrical	1	KY	
	209-54050-5	.	.	.					FAIRLEAD SUBASSEMBLY, Generator lead electrical	1	KY	
	209-54050-7	.	.	.					FAIRLEAD SUBASSEMBLY, Generator lead electrical	1	KY	
	320-63-750-SH	.	.						CLAMP (MAR) (98625)	1	KY	
-95	209-54063	.							CLAMP ASSEMBLY, Generator cable "B" electrical	1		
-96	11242	.							TERMINAL BLOCK (AITR) (80006)	1		
	194-54067	.							GASKET, Electrical terminal block	1		
	AN364-1032	.							NUT	4		
	2W18-10L	.							WASHER, Flat (NA) (89372)	4		
-97	11241	.							TERMINAL BLOCK (AITR) (80006)	1		
	194-54067	.							GASKET, Electrical terminal block	1		
	AN364-1032	.							NUT	4		
	2W1AL14-14-64	.							WASHER, Plain (NA) (89372)	4		
-98	11243	.							TERMINAL BLOCK (AITR) (80006)	1		
	194-54067	.							GASKET, Electrical terminal block	1		
	AN364-1032	.							NUT	4		
	2W1AL14-14-64	.							WASHER, Plain (NA) (89372)	4		
-99	30E13-6C	.							STARTER-GENERATOR (GFP) (supersedes 30E13-6B (see Technical Manual NAVAER 03-5AA-550 for breakdown) for future procurement)	1	KC	
-100	30E13-6D	.							STARTER-GENERATOR (GFP) (supersedes 30E13-6C for future procurement)	1	QP	
-101	30E13-6Q-F	.							STARTER-GENERATOR (GFP) (supersedes 30E13-6D for future procurement)	1	QQ	
-102	AT-719	.							LINE (AMK) (70510) (engine combustion chamber fuel drain line)	1		
-103	AN363-1032	.							NUT	2		
-104	AN520-1032	.							SCREW	2		
-105	194-42012	.							CLAMP, Engine combustion chamber fuel drain line	1		
-106	194-42043	.							SUPPORT, Engine combustion chamber fuel drain line	1		
-107	209-42019	.							CLIP, Engine combustion chamber fuel drain line	2	AP	

MISSILE PYLON AND ADAPTER COMBINATION AT BL 48 LH - APPLICABLE TO AIRCRAFT CODED (KY)

FIGURE & INDEX NO.	PART NUMBER	1 2 3 4 5 6 7 NOMENCLATURE	UNITS PER ASSY.	USABLE ON CODE	S/C NO.
346	209-63202-71	PACKAGE, Provision for external stores	1	KY	
	209-68210	. PYLON ASSEMBLY, BL 48 LH	1	KY	
-1	AN364-1216	. . NUT	2	KY	
-2	2W18-1216	. . WASHER, Flat (NA) (89372)	2	KY	
-3	NAS464P12A43	. . BOLT	2	KY	
-4	209-68215	. . BOLT, Pylon attaching (magnetic inspected)	2	KY	
-5	AN509-10R6	. . SCREW	30	KY	
-6	209-540153-21	. . HARNESS, Electrical pylon assembly of	1	KY	
-7	209-68216	. . FAIRING ASSEMBLY, BL 48 LH pylon	1	KY	
-8	209-68216-31	. . . NOSE, BL 48 LH pylon fairing assembly	1	KY	
-9	98265-1-.180	. . . STUD (MKL) (76530)	8	KY	
	GH5x-.622	. . . GROMMET (DZ) (72794)	8	KY	
	99336	. . . PIN (MKL) (76530)	8	KY	
-10	99947-C-.130	. . . RECEPTACLE (MKL) (76530)	8	KY	
-11	48155	. . . PLUG BUTTON (UC) (61864)	2	KY	
-12	50841	. . . PLUG BUTTON (UC) (61864)	8	KY	
-13	209-68216-65	. . . SEAL, BL 48 LH pylon fairing assembly	1	KY	
-14	209-68216-63	. . . SEAL, BL 48 LH pylon fairing assembly (outboard)	1	KY	
	209-68216-67	. . . SEAL, BL 48 LH pylon fairing assembly (inboard)	1	KY	
-15	209-68216-61	. . . SEAL, BL 48 LH pylon fairing assembly (outboard)	1	KY	
	209-68216-59	. . . SEAL, BL 48 LH pylon fairing assembly (inboard)	1	KY	
-16	209-68216-49	. . . DOOR, BL 48 LH pylon fairing assembly (outboard)	1	KY	
	209-68216-50	. . . DOOR, BL 48 LH pylon fairing assembly (inboard)	1	KY	
-17	UFT20	. . . STUD (DZ) (72794)	4	KY	
	GH5x-.622	. . . GROMMET (DZ) (72794)	4	KY	
	URF5	. . . RECEPTACLE (DZ) (72794)	4	KY	
-18	H-6300S-2.5-072-072	. . . HINGE (HWL) (83014)	2	KY	
-19	209-68216-45	. . . DOOR, BL 48 LH pylon fairing assembly (outboard only)	3	KY	
-20	H-5000-072-132	. . . LATCH (HWL) (83014)	3	KY	
-21	H-6300S-1.875-072-072	. . HINGE (HWL) (83014)	2	KY	
-22	209-68216-41	. . . DOOR, BL 48 LH pylon fairing assembly (outboard)	1	KY	
	209-68216-42	. . . DOOR, BL 48 LH pylon fairing assembly (inboard)	1	KY	
-23	UF5T20	. . . STUD (DZ) (72794)	4	KY	
-24	UF5T30	. . . STUD (DZ) (72794)	4	KY	
	GH5x-.622	. . . GROMMET (DZ) (72794)	8	KY	
	URF5	. . . RECEPTACLE (DZ) (72794)	8	KY	
-25	H-6300S-4-072-072	. . . HINGE (HWL) (83014)	1	KY	
-26	AN509-10R6	. . . SCREW	12	KY	
	209-68216-7	. . . CHANNEL, BL 48 LH pylon fairing assembly (outboard)	1	KY	
-27	209-68216-8	. . . CHANNEL, BL 48 LH pylon fairing assembly (inboard)	1	KY	
	209-68216-5	. . . CHANNEL, BL 48 LH pylon fairing assembly (outboard)	1	KY	
-28	209-68216-6	. . . CHANNEL, BL 48 LH pylon fairing assembly (inboard)	1	KY	
	209-68216-3	. . . CHANNEL, BL 48 LH pylon fairing assembly (outboard)	1	KY	
-29	209-68216-4	. . . CHANNEL, BL 48 LH pylon fairing assembly (inboard)	1	KY	
	209-68211-11	. . BEAM ASSEMBLY, Pylon	1	KY	
-30	4B20B12-016	. . . BUSHING, Press-fit flanged (NA) (89372)	2	KY	
-31	4B19B12-016	. . . BUSHING, Press-fit plain (NA) (89372)	4	KY	
-32	209-68211-3	. . . HOUSING, Pylon beam assembly	1	KY	
-33	No Number	. . LAUNCHER ASSEMBLY, Missile (X5A) (GFP)	1	KY	
-34	209-63210-1	. PYLON ASSEMBLY, BL 48 adapter LH (see figure 340 for breakdown)	1	FR	

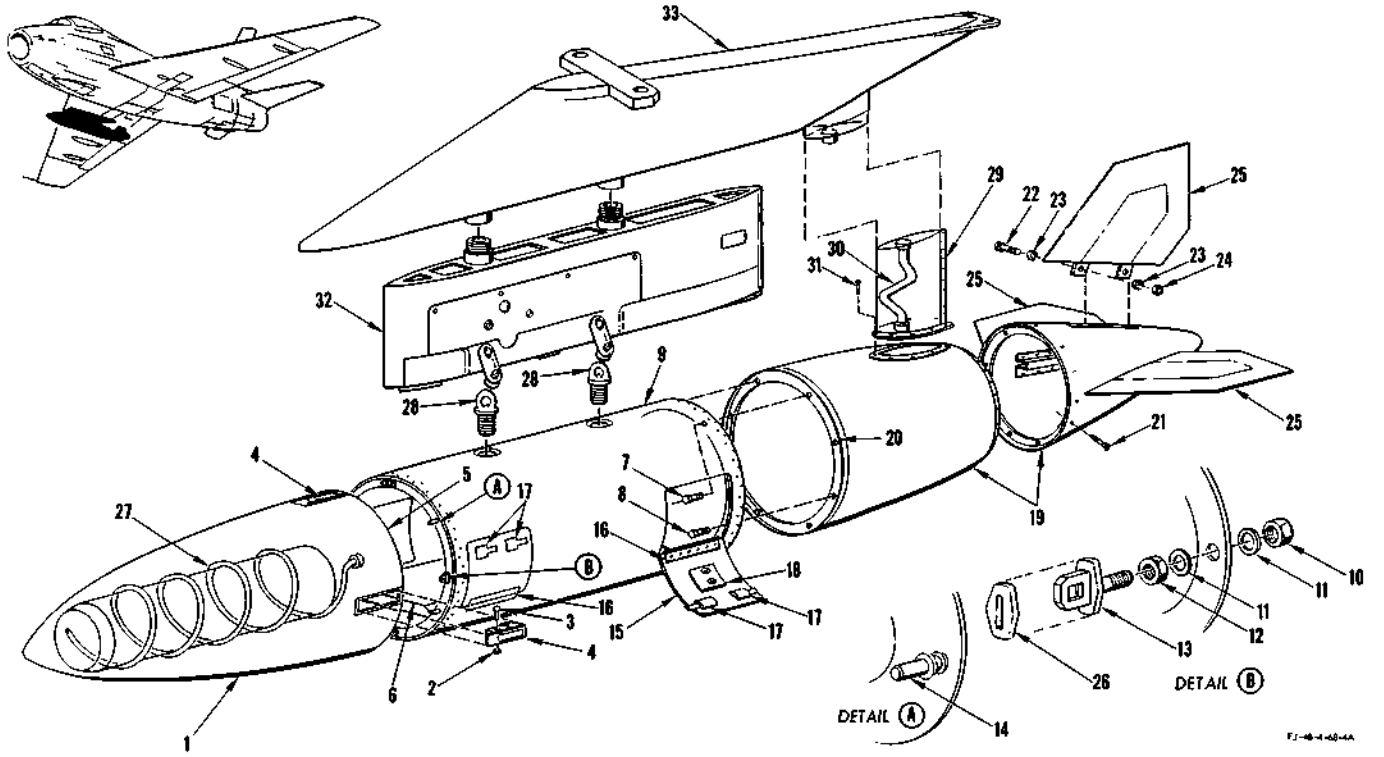

FIGURE 347 - BULLPUP CONTROL POD AND ADAPTER COMBINATION AT BL 48 RH - APPLICABLE TO AIRCRAFT CODED (KY)

FIGURE & INDEX NO.	PART NUMBER	1	2	3	4	5	6	7	NOMENCLATURE	UNITS PER ASSY.	USABLE ON CODE	S/C NO.
347	209-63202-71								PACKAGE, Provision for external stores	1	KY	
	209-68214		.						POD ASSEMBLY, Bullpup control	1	KY	
-1	209-68266		.	.					CONE, Bullpup control pod forward assembly of	1	KY	
	209-68232		.	.	.				CONE, Bullpup control pod forward	1	KY	
-2	2W18-10M		.	.	.				WASHER, Flat (NA) (89372)	4	KY	
-3	AN393-41		.	.	.				PIN	4	KY	
-4	H-91765		.	.	.				LATCH (HWL) (83014)	4	KY	
	209-68237		.	.	.				WELL, Bullpup control pod forward latch	4	KY	
-5	209-68266-27		.	.	.				SEAL, Bullpup control pod forward cone	1	KY	
-6	209-68233		.	.					SHELF, Bullpup control pod equipment assembly of	1	KY	
	BL-HG-4-1.400		.	.					BALL-LOK PIN (D. W. Price Corp) (97978)	1	KY	
-7	AN4-12A		.	.					BOLT	2	KY	
-8	AN4-6A		.	.					BOLT	6	KY	
-9	209-68227	*1	.	.					FRAME, Bullpup control pod center assembly of	1	KY	
	209-68227-41		.	.					FRAME, Bullpup control pod center assembly of	1	KY	
-10	AN365-524		.	.	.				NUT	4	KY	
-11	2W18-516M		.	.	.				WASHER, Flat (NA) (89372)	8	KY	
-12	AN316-5R		.	.	.				NUT	4	KY	
-13	209-68226		.	.	.				EYEBOLT, Control pod	4	KY	
-14	HS10-8-3-9		.	.	.				STUD PIN (HIS) (73197)	4	KY	
	NAS179-8		.	.	.				COLLAR	4	KY	
-15	209-68227-13		.	.	.				DOOR, Control pod center frame assembly	4	KY	
-16	209-6227-35		.	.	.				HINGE, Control pod center frame assembly	8	KY	
	AN253-2-500		.	.	.				PIN	4	KY	
-17	H-5000-064-158		.	.	.				LATCH (HWL) (83014)	8	KY	
-18	209-543218		.	.	.				HOLDER, Electrical control spare fuse assembly of	1	KY	
-19	209-68228	*1	.	.					CONE, Bullpup control pod aft assembly of	1	KY	
	209-68228-61		.	.					CONE, Bullpup control pod aft assembly of	1	KY	
-20	209-68228-31		.	.	.				SEAL, Control pod aft cone assembly	1	KY	
-21	7S15-10-8		.	.	.				SCREW, 100° flush head close tolerance (NA) (89372)	12	KY	
-22	AN4-14A		.	.	.				BOLT	6	KY	
-23	2W18-416M		.	.	.				WASHER, Flat (NA) (89372)	12	KY	
-24	AN365-428		.	.	.				NUT	6	KY	
-25	209-68234		.	.					FIN, Control pod assembly of	3	KY	
-26	244-68011		.	.					SEAL, Bullpup control pod latch	4	KY	
-27	244-71010		.	.					ANTENNA, Radio guidance assembly of (see Electrical and Instrument)	1	KY	
-28	244-68010-3		.	.					LUG	2	KY	
-29	209-68236		.						FAIRING, Bullpup control pod wire disconnect assembly of	1	KY	
-30	209-540152-21		.	.					HARNESS, Electrical control pod and pylon assembly of	1	KY	
-31	7S15-10-8		.						SCREW, 100° flush head close tolerance (NA) (89372)	9	KY	
-32	No Number		.						LAUNCHER ASSEMBLY, Bomb and rocket (Aero 15B) (GFP)	1	KY	
-33	209-63210-102		.						PYLON ASSEMBLY, BL 48 adapter (see figure 340 for breakdown)	1	KY	

NOTE: *1 209-68227-41 together with 209-68228-61 supersedes 209-68227 together with 209-68228 for future procurement

EXTERNAL STORES MK-7 PYLON AT BL 105 LH - APPLICABLE TO AIRCRAFT CODED (FR)

FIGURE & INDEX NO.	PART NUMBER	1	2	3	4	5	6	7	NOMENCLATURE	UNITS PER ASSY.	USABLE ON CODE	S/C NO.
348	209-63202-31		PACKAGE, Provision for external stores							1	FR	
	209-63313		.	PYLON, BL 105 MK-7 assembly of						1	FR	
	ATTACHING PARTS											
-1	MS20010H20		.	BOLT						1	FR	
-2	MS20002C10		.	WASHER						1	FR	
-3	600-001-5/8		.	STAT-O-SEAL (WFRC) (83259)						1	FR	
-4	AN6227B13		.	PACKING						1	FR	
-5	MS20009H20		.	BOLT						2	FR	
-6	MS20002C9		.	WASHER						2	FR	
-7	600-001-9/16		.	STAT-O-SEAL (WFRC) (83259)						2	FR	
-8	AN6227B12		.	PACKING						2	FR	
-9	AN509-10R12		.	SCREW						2	FR	
	---*---											
-10	AN509-10-15		.	.	SCREW					10	FR	
-11	AN509-10-11		.	.	SCREW					8	FR	
	209-63316-1	*1	.	.	DOOR, BL 105 MK-7 pylon assembly of (outboard)					1	FR	
	209-63316-2	*1	.	.	DOOR, BL 105 MK-7 pylon assembly of (inboard)					1	FR	
-12	209-63316-21	*1	.	.	DOOR, BL 105 MK-7 pylon assembly of (outboard)					1	FR	
-13	209-63316-22	*1	.	.	DOOR, BL 105 MK-7 pylon assembly of (inboard)					1	FR	
-14	UF5T20		.	.	.	STUD (DZ) (72794) (used on 209-63316-21 only)				6	FR	
	GH5x-.662		.	.	.	GROMMET (DZ) (72794) (used on 209-63316-21 only)				6	FR	
-15	UF5T20		.	.	.	STUD (DZ) (72794) (used on 209-63316-22 only)				3	FR	
	GH5x-.662		.	.	.	GROMMET (DZ) (72794) (used on 209-63316-22 only)				3	FR	
-16	UF5T30		.	.	.	STUD (DZ) (72794) (used on 209-63316-21 only)				1	FR	
	GH5x-.662		.	.	.	GROMMET (DZ) (72794) (used on 209-63316-21 only)				1	FR	
-17	UF5T30		.	.	.	STUD (DZ) (72794) (used on 209-63316-22 only)				2	FR	
	GH5x-.662		.	.	.	GROMMET (DZ) (72794) (used on 209-63316-22 only)				3	FR	
-18	209-63316-5		.	.	.	EJECTOR SPRING, BL 105 MK-7 pylon door assembly (used on 209-63316-21 only)				2	FR	
	209-63316-5		.	.	.	EJECTOR SPRING, BL 105 MK-7 pylon door assembly (used on 209-63316-22 only)				1	FR	
-19	209-63316-23		.	.	.	HINGE, BL 105 MK-7 pylon door assembly				1	FR	
-20	209-63316-25		.	.	.	HINGE, BL 105 MK-7 pylon door assembly				1	FR	
-21	AN253-2-1450		.	.	.	PIN				1	FR	
-22	209-63314		.	.	FAIRING, BL 105 MK-7 forward assembly of					1	FR	
-23	UF5T20		.	.	.	STUD (DZ) (72794)				2	FR	
	GH5x-.662		.	.	.	GROMMET (DZ) (72794)				2	FR	
-24	209-63314-9		.	.	.	EJECTOR SPRING, BL 105 MK-7 forward fairing assembly				2	FR	
-25	URF5		.	.	.	RECEPTACLE (DZ) (72794)				2	FR	
	URF5-3		.	.	.	SPACER (DZ) (72794)				4	FR	
-26	209-63328		.	.	HOOK, BL 105 MK-7 pylon nose fairing assembly of					1	FR	
-27	209-63328-13		.	.	.	SPRING, BL 105 MK-7 pylon nose fairing hook assembly				1	FR	
-28	URF5		.	.	.	RECEPTACLE (DZ) (72794)				6	FR	
	URF5-3		.	.	.	SPACER (DZ) (72794)				12	FR	
	2W18-8M		.	.	.	WASHER, Flat (NA) (89372)				12	FR	
-29	NAS222-11		.	.	SCREW					3	FR	
-30	2W18-416M		.	.	WASHER, Flat (NA) (89372)					3	FR	
-31	2P9-11-49		.	.	PIN, Press-fit (NA) (89372)					1	FR	
-32	AN365-832		.	.	NUT					5	FR	
-33	2W18-8		.	.	WASHER, Flat (NA) (89372)					5	FR	
-34	7S15-8R8		.	.	SCREW, 100° flush head (NA) (89372)					5	FR	
-35	209-63318		.	.	HINGE, BL 105 MK-7 pylon forward fairing					1	FR	
-36	209-63319		.	.	SPRING, Compression					1	FR	
-37	209-63324		.	.	RETAINER, BL 105 MK-7 pylon spring					1	FR	
-38	2W18-10M		.	.	WASHER, Flat (NA) (89372)					2	FR	
-39	AN393-13		.	.	PIN					1	FR	
-40	209-63321		.	.	ROD, BL 105 MK-7 pylon spring guide					1	FR	
-41	AN42B-C4A		.	.	BOLT					1	FR	
-42	209-63320		.	.	BRACKET, BL 105 MK-7 pylon fairing support					1	FR	
-43	7S15-10-8		.	.	SCREW, 100° flush head (NA) (89372)					3	FR	
-44	AN509-10-9		.	.	SCREW					4	FR	
-45	AN509-10-8		.	.	SCREW					28	FR	
	209-63315	*1	.	.	FAIRING ASSEMBLY, BL 105 MK-7 pylon aft					1	FR	
-46	209-63315-81	*1	.	.	FAIRING ASSEMBLY, BL 105 MK-7 pylon aft					1	FR	
-47	URF5		.	.	.	RECEPTACLE (DZ) (72794)				6	FR	
	URF5-3		.	.	.	SPACER (DZ) (72794)				12	FR	
-48	209-63335		.	.	.	SEAL, BL 105 MK-7 pylon electrical				1	FR	
-49	209-63336		.	.	.	RETAINER, BL 105 MK-7 pylon electrical seal				1	FR	
	ATTACHING PARTS											
	AN515-4R8		.	.	.	SCREW				8	FR	
	AN365-440		.	.	.	NUT				8	FR	
	---*---											
-50	209-63315-23		.	.	.	DOOR, BL 105 MK-7 pylon aft fairing assembly				1	FR	
-51	209-63315-39		.	.	.	HINGE, BL 105 MK-7 pylon aft fairing assembly				1	FR	
	209-63315-41		.	.	.	HINGE, BL 105 MK-7 pylon aft fairing assembly				1	FR	
	AN253-2-975		.	.	.	PIN				1	FR	
-52	UF5T20		.	.	.	STUD (DZ) (72794)				3	FR	
	GH5x-.662		.	.	.	GROMMET (DZ) (72794)				3	FR	
	URF5		.	.	.	RECEPTACLE (DZ) (72794)				3	FR	
-53	209-63315-73		.	.	.	DOOR, BL 105 MK-7 pylon aft fairing assembly (used on 209-63315 only)				1	FR	
-54	209-63315-43		.	.	.	HINGE, BL 105 MK-7 pylon aft fairing assembly (used on 209-63315 only)				1	FR	
-55	209-63315-45		.	.	.	HINGE, BL 105 MK-7 pylon aft fairing assembly (used on 209-63315 only)				1	FR	

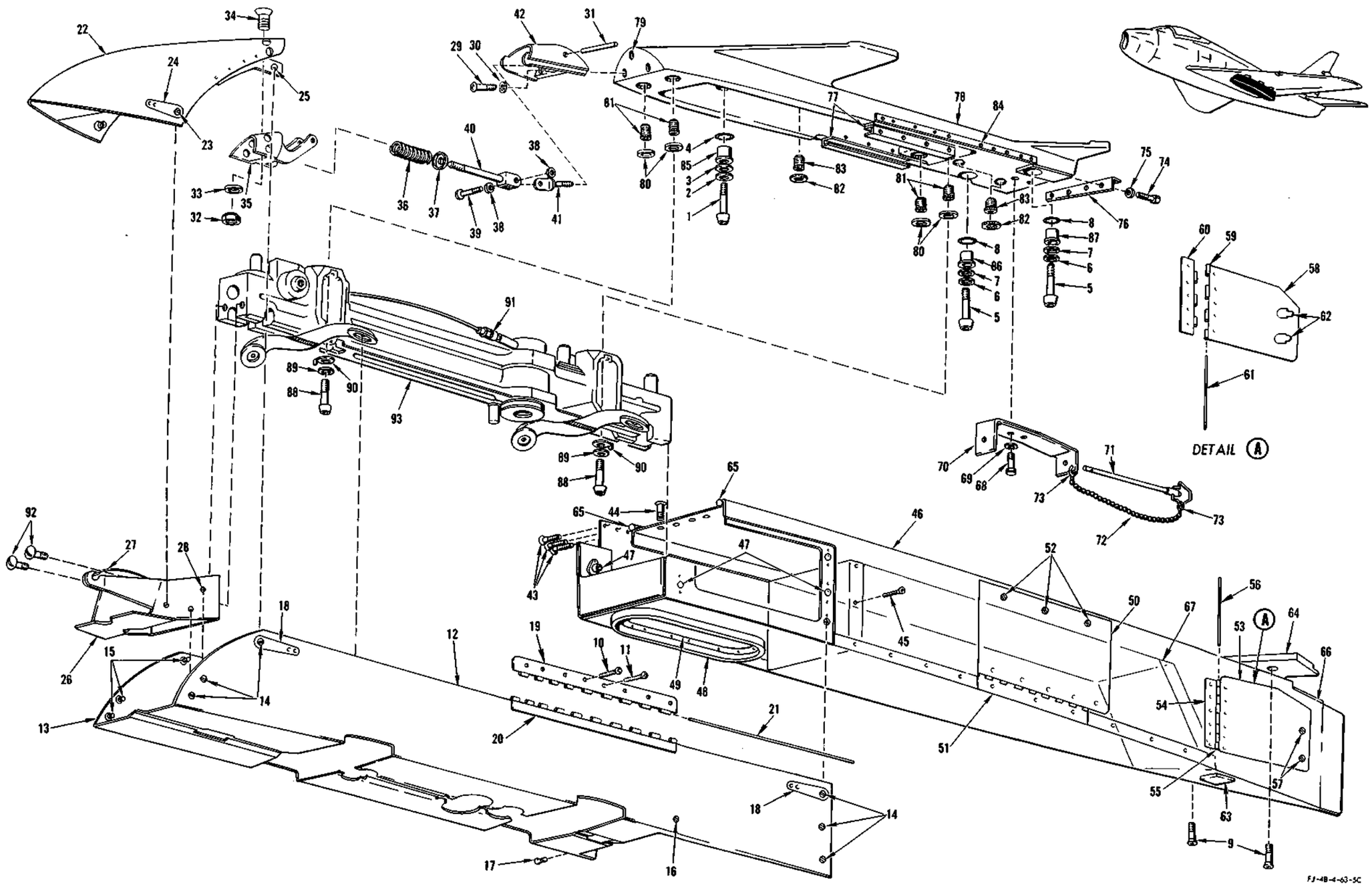

FIGURE 348 - EXTERNAL STORES MK - 7 PYLON AT BL 105 LH - APPLICABLE TO AIRCRAFT CODED (FR)

EXTERNAL STORES MK-7 PYLON AT BL 105 LH - APPLICABLE TO AIRCRAFT CODED (FR)

FIGURE & INDEX NO.	PART NUMBER	1	2	3	4	5	6	7	NOMENCLATURE	UNITS PER ASSY.	USABLE ON CODE	S/C NO.
348-56	AN253-2-550								PIN (used on 209-63315 only)	1	FR	
-57	UF5T20								STUD (DZ) (72794) (used on 209-63315 only)	2	FR	
	GH5x-.662								GROMMET (DZ) (72794) (used on 209-63315 only)	2	FR	
	URF5								RECEPTACLE (DZ) (72794) (used on 209-63315 only)	2	FR	
-58	209-63315-85								DOOR, BL 105 MK-7 pylon aft fairing assembly LH (used on 209-63315-81 only)	1	FR	
	209-63315-86								DOOR, BL 105 MK-7 pylon aft fairing assembly RH (used on 209-63315-81 only)	1	FR	
-59	209-63315-87								HINGE, BL 105 MK-7 pylon aft fairing assembly (used on 209-63315-81 only)	2	FR	
-60	209-63315-89								HINGE, BL 105 MK-7 pylon aft fairing assembly (used on 209-63315-81 only)	2	FR	
-61	209-63315-93								PIN, (used on 209-63315-81 only)	2	FR	
-62	H5000-.081-.164								LATCH (HWL) (83014) (used on 209-63315-81 only)	4	FR	
-63	2182-7								RECEPTACLE (CED) (71468)	1	FR	
-64	209-63149-7								FAIRING SUPPORT (left hand side)	1	FR	
	209-63149-9								FAIRING SUPPORT (right hand side)	1	FR	
	209-63315-65								SEAL, BL 105 MK-7 pylon aft fairing assembly (make from A1-4454-1 x 1-1/4 (CHR) (71643))	1	FR	
-65	209-63315-49								SEAL, BL 105 MK-7 pylon assembly (make from A1-4454-1 x 42-3/4 (CHR) (71643))	2	FR	
-66	209-63315-47								SEAL, BL 105 MK-7 pylon assembly	1	FR	
-67	209-540140								ELECTRICAL EQUIPMENT ASSEMBLY, MK-7 pylon (superseded by 209-540140-21 for future procurement) (see Electrical and Instrument)	1	FR	
	209-540140-21								ELECTRICAL EQUIPMENT ASSEMBLY, MK-7 pylon (supersedes 209-540140 for future procurement) (see Electrical and Instrument)	1	FR	
-68	AN3H4A								BOLT	2	FR	
-69	2W18-10M								WASHER, Flat (NA) (89372)	2	FR	
-70	209-63326								SUPPORT ASSEMBLY, BL 105 MK-7 pylon wire	1	FR	
-71	BL-4-5.160								BALL-LOK PIN (D. W. Price Corp) (97978)	1	FR	
-72	9C1-2-8								CHAIN, Safety (NA) (89372)	1	FR	
-73	5R10								RING, Chain retainer (NA) (89372)	2	FR	
-74	AN3H4A								BOLT	4	FR	
-75	2W18-10M								WASHER, Flat (NA) (89372)	4	FR	
-76	209-63327								ANGLE, BL 105 MK-7 pylon attaching	1	FR	
-77	209-63339								CHANNEL ASSEMBLY, BL 105 MK-7 pylon	2	FR	
	209-63317-11	*1							ADAPTER ASSEMBLY, BL 105 MK-7 pylon	1	FR	
	209-63317-21	*1							ADAPTER ASSEMBLY, BL 105 MK-7 pylon	1	FR	
	209-63317-3	*1							ADAPTER, BL 105 MK-7 pylon adapter assembly	1	FR	
-78	209-63317-5	*1							ADAPTER, BL 105 MK-7 pylon adapter assembly	1	FR	
-79	RD206SB-6.5L								INSERT (ROSN) (83324)	3	FR	
	RL28SB-8								RING (ROSN) (83324)	3	FR	
-80	4B19S12-006								BUSHING, Press-fit plain (NA) (89372)	4	FR	
-81	1191-12CNx-3/4								INSERT, Heli-coil (AF) (91767)	4	FR	
-82	RD205SB-5.5L								INSERT (ROSN) (83324)	3	FR	
-83	RL24SB7								RING (ROSN) (83324)	3	FR	
-84	RD205SB-5.5L								INSERT (ROSN) (83324)	10	FR	
	RL24SB7								RING (ROSN) (83324)	10	FR	
-85	209-63006								BUSHING, Inboard pylon attaching forward	1	FR	
-86	209-63004								BUSHING, Inboard pylon attaching	1	FR	
-87	209-63353								BUSHING, Universal pylon attaching	1	FR	
-88	MS20012H12								BOLT	4	FR	
-89	MS20002C12								WASHER	4	FR	
-90	209-63232								WASHER, External stores pylon	4	FR	
-91	209-63227								ADAPTER, MK-25 primer	1	FR	
-92	AN24-8								BOLT	2	FR	
-93	No Number								RACK (Aero 7A) (DG) (18355)	1	FR	

NOTE: *1 209-63316-21 and 209-63316-22 together with 209-63315-81, 209-63317-21 and 209-63317-5 supersede 209-63316-1 and 209-63316-2 together with 209-63315, 209-63317-11 and 209-63317-3 for future procurement

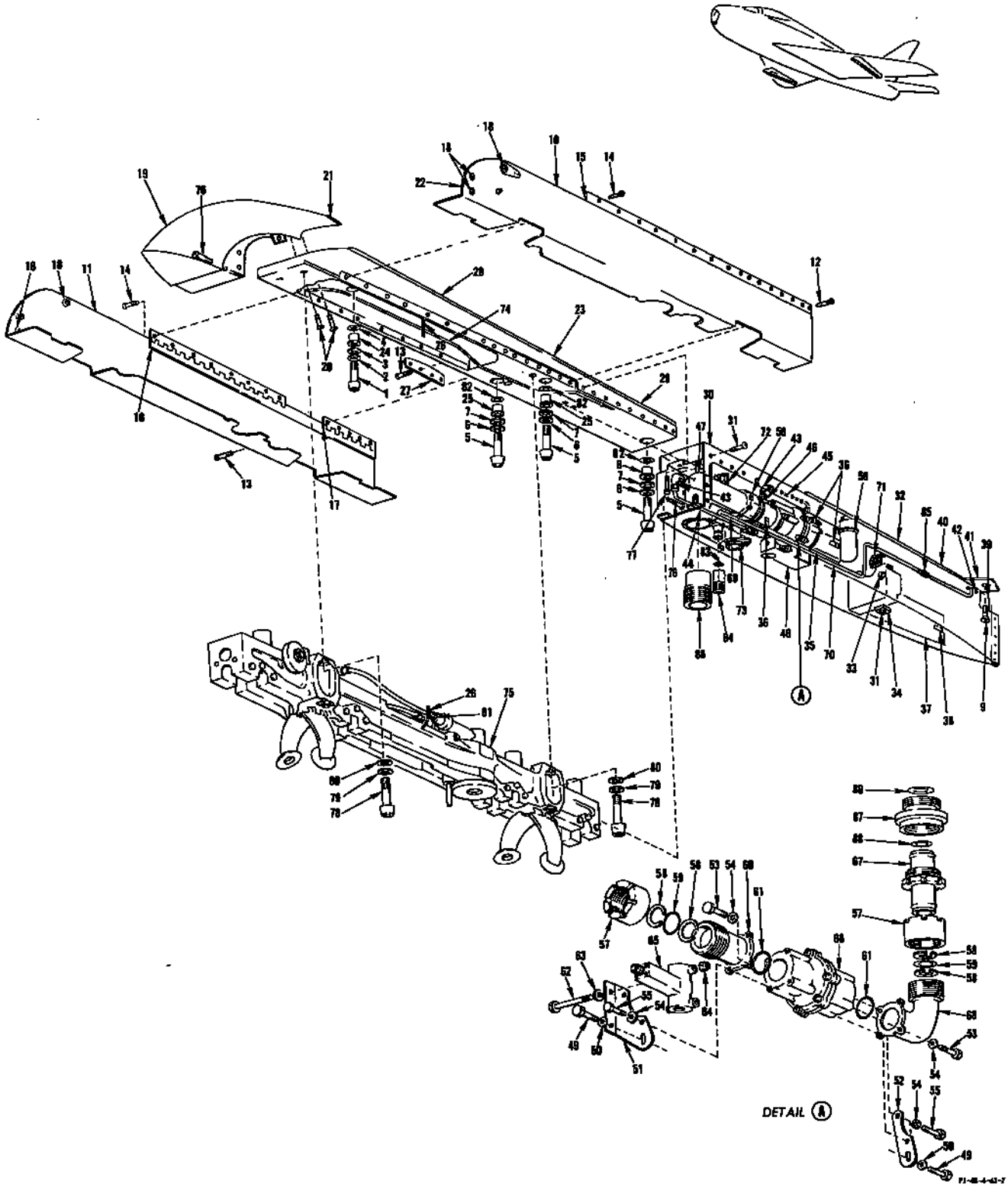

FIGURE 349 - AERO 1A 150 GALLON FUEL TANK PYLON AT BL 153 - APPLICABLE TO AIRCRAFT CODED (FR)

LIQUID OXYGEN - APPLICABLE TO AIRCRAFT CODED (BS)

FIGURE & INDEX NO.	PART NUMBER	1 2 3 4 5 6 7 NOMENCLATURE	UNITS PER ASSY.	USABLE ON CODE	S/C NO.
352	209-73353	CONTAINER ASSEMBLY, Oxygen equipment	1	BS	
-1	14460	. FIVE LITER LIQUID OXYGEN CONVERTER INSTALLATION (ARO) (03990) (see figure 354 for breakdown)	1	BS	
-2	900095	. . VALVE AND CAP ASSEMBLY, Filler (ARO) (03990)	1	BS	
	900187	. . "O" RING (ARO) (03990)	1	BS	
-3	199000-2	. DISCONNECT OUTLET (ESSX) (83533) (see figure 352A for breakdown)	1	BS	
-4	200000-2	. DISCONNECT OUTLET (ESSX) (83533) (see figure 352A for breakdown)	1	BS	
-5	209-73366	BOLT, Oxygen container forward mounting	1	BS	
-6	209-73359-3	CLIP, Oxygen system flask mounting (supersedes 209-73359 for future procurement)	1	BS	
-7	209-73357	BRACKET ASSEMBLY, Liquid oxygen system flask mounting station 53	1	BS	
-8	209-73361	. BOLT, Oxygen container aft mounting	1	BS	
-9	209-73362	. NUT, Oxygen container aft mounting swivel	1	BS	
-10	2R6-6-3-4	. STUD, Hi-shear rivet (NA) (89372)	1	BS	
	HS15-6	. COLLAR (HIS) (73197)	1	BS	
-11	209-73355-5	HOSE ASSEMBLY, Liquid oxygen equipment	1	BS	
	R3800X-5-0126	. HOSE, Teflon (RF) (50599)	1	BS	
-12	199000-1	. DISCONNECT OUTLET (ESSX) (83533) (see figure 352A for breakdown)	1	BS	
-13	209-73355-3	HOSE ASSEMBLY, Liquid oxygen equipment	1	BS	
	R3800X-6-0136	. HOSE, Teflon (RF) (50599)	1	BS	
-14	200000-1	. DISCONNECT OUTLET (ESSX) (83533) (see figure 352A for breakdown)	1	BS	
	209-73354	VALVE ASSEMBLY, Oxygen equipment pressure operating control	1	BS	
	ATTACHING PARTS				
	AN3-4A	BOLT	2	BS	
	2W18-10	WASHER, Flat (NA) (89372)	2	BS	
	---*---				
-15	14790	. CONTROL VALVE (ARO) (03990)	1	BS	
-16	AN816-5-4D	. NIPPLE	1	BS	
-17	AN911-1D	. NIPPLE	1	BS	
-18	AN917-1D	. TEE	1	BS	
-19	AN816-6-2D	. NIPPLE	1	BS	
-20	FR-5-A1-110	. RELIEF VALVE (Bendix-Pioneer Central Division) (99251)	1	BS	
-21	AN816-5D	. NIPPLE	1	BS	
-22	225000-2	. DISCONNECT OUTLET (ESSX) (83533) (see figure 352A for breakdown)	1	BS	
-23	209-73355-7	HOSE ASSEMBLY, Liquid oxygen equipment	1	BS	
	R3800X-5-0126	. HOSE, Teflon (RF) (50599)	1	BS	
	225000-1	. DISCONNECT OUTLET (ESSX) (83533) (see figure 352A for breakdown)	1	BS	
-24	209-73358	FITTING, Liquid oxygen system overboard vent skin attaching	1	BS	
-25	209-73352-15	LINE ASSEMBLY, Liquid oxygen system from oxygen pressure control valve at fuselage station 29 to heat exchanger fitting end at fuselage station 27.25	1	BS	
-26	5018-301-1	HEAT EXCHANGER ASSEMBLY, Liquid oxygen (RYN) (01484) (supersedes 5018-301 (RYN) (01484) for future procurement)	1	BS	
	ATTACHING PARTS				
-27	AN3-4A	BOLT	2	BS	
-28	2W1AL16-20-63	WASHER, Plain (NA) (89372)	2	BS	
	---*---				
-29	209-73352-23	LINE ASSEMBLY, Liquid oxygen system from heat exchanger fitting end at fuselage station 39 to bulkhead elbow fitting at fuselage station 54.625	1	BS	
-30	AN833-5D	ELBOW	3	BS	
-31	AN901-5A	GASKET	6	BS	
-32	AN924-5D	NUT	3	BS	
-33	209-73352-19	LINE ASSEMBLY, Liquid oxygen system from bulkhead elbow fitting at fuselage station 51.375 to bulkhead elbow fitting at fuselage station 54.625	1	BS	
-34	209-73352-21	LINE ASSEMBLY, Liquid oxygen system from bulkhead elbow fitting at fuselage station 54.375 to bulkhead elbow fitting at fuselage station 71.75	1	FX	
	209-73352-25	LINE ASSEMBLY, Liquid oxygen system from bulkhead elbow fitting at fuselage station 54.375 to bulkhead elbow fitting at fuselage station 71.75	1	FR	
-35	R3805-5-0094	LINE ASSEMBLY (RF) (50599)	1	BS	
-36	209-73370	REGULATOR ASSEMBLY, Oxygen equipment	1	BS	
	2867-7B-C1	. REGULATOR, Automatic positive pressure diluter demand (GFP) (Bendix-Pioneer Central Division) (99251) (for breakdown see Technical Manual AN 03-50A-49)	1	BS	
	AN816-5D	. NIPPLE	1	BS	
-37	181-73307-11	SUPPORT ASSEMBLY, Oxygen regulator fuselage station 75 (supersedes 181-73307 for future procurement)	1	BS	
	ATTACHING PARTS				
	AN365-832	NUT	4	BS	
	2W18-8L	WASHER, Flat (NA) (89372)	8	BS	
	AN526-832R8	SCREW	4	BS	
	---*---				
	181-73314	. SUPPORT, Oxygen regulator	1	BS	
	181-73315	. BRACKET, Oxygen regulator	1	BS	
	209-73317	. CLAMP ASSEMBLY, Oxygen regulator fuselage station 75 (make from 902-375-2 (MAR) (98625))	1	BS	
	AN365-832	. NUT	3	BS	
	2W18-8	. WASHER, Flat (NA) (89372)	5	BS	
	AN526-832R8	. SCREW	3	BS	
-38	AN6003T12A	TUBE ASSEMBLY	1	BS	
	AN737RM38	CLAMP	2	BS	

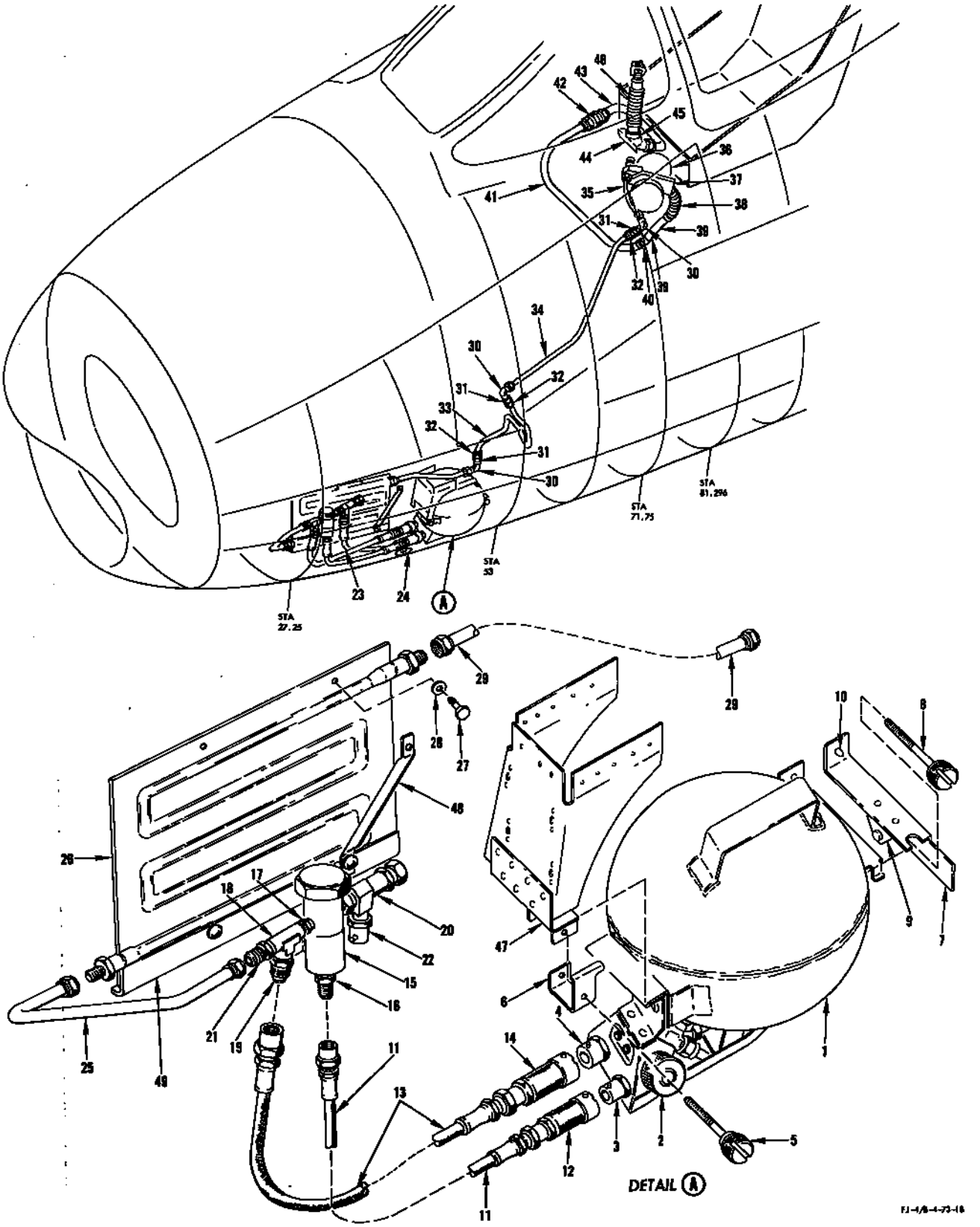

FIGURE 352 - LIQUID OXYGEN - APPLICABLE TO AIRCRAFT CODED (BS)

LIQUID OXYGEN - APPLICABLE TO AIRCRAFT CODED (BS)

FIGURE & INDEX NO.	PART NUMBER	1 2 3 4 5 6 7 NOMENCLATURE	UNITS PER ASSY.	USABLE ON CODE	S/C NO.
352-39	181-73310-49	LINE ASSEMBLY, Oxygen breathing tube upper	1	KV	
	181-73310-63	LINE ASSEMBLY, Oxygen breathing tube upper	1	FL	
-40	3H2-12-15	HOSE (NA) (89372)	1	BS	
	ATTACHING PARTS				
	AN737RM38	CLAMP	2	BS	
	---*---				
-41	181-73310-45	LINE ASSEMBLY, Oxygen breathing tube forward	1	BS	
-42	AN832-12D	UNION	1	BS	
	AN901-12A	GASKET	1	BS	
	AN924-12D	NUT	1	BS	
-43	181-73310-35	LINE ASSEMBLY, Oxygen breathing tube aft	1	BS	
-44	181-73313	FITTING, Pilots oxygen system fuselage station 86 tube	1		
-45	194-73311	COLLAR, Ejection seat oxygen tube (supersedes 181-73311 for future procurement)	1	BS	
	ATTACHING PARTS				
	AN742D24	CLAMP	1	BS	
	AN520-10R8	SCREW	1	BS	
	2W18-10L	WASHER, Flat (NA) (89372)	2	BS	
	AN365-1032	NUT	1	BS	
	---*---				
-46	D100-528	TUBE ASSEMBLY, Oxygen breathing and radio (DARL) (83452) (interchangeable with 208-2 (Aero Tube Co) (98672)	1	BS	
-47	209-73356	BRACKET ASSEMBLY, Liquid oxygen system flask mounting	1	BS	
-48	209-73368	SUPPORT ASSEMBLY, Liquid oxygen system heat exchanger	1	BS	
	ATTACHING PARTS				
	AN520-10R12	SCREW	1	BS	
	AN520-10R14	SCREW	1	BS	
	AN365-1032	NUT	2	BS	
	2W18-10	WASHER, Flat (NA) (89372)	4	BS	
	---*---				
-49	209-73369	STRIKER, Liquid oxygen heat exchanger	1	BS	
	ATTACHING PARTS				
	AN520-10R10	SCREW	1	BS	
	AN365-1032	NUT	1	BS	
	2W18-10	WASHER, Flat (NA) (89372)	2	BS	
	---*---				

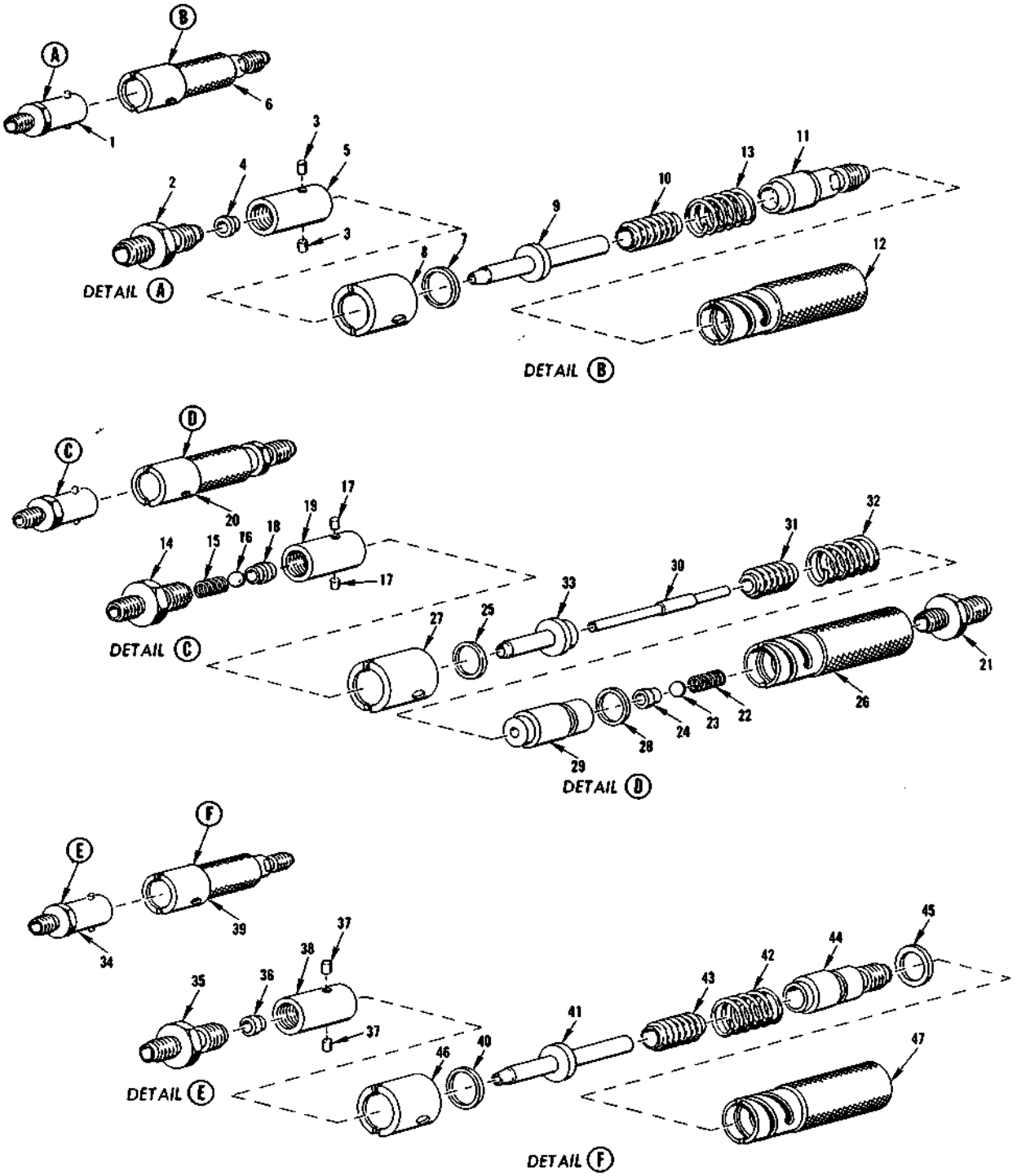

FIGURE 352A - LIQUID OXYGEN QUICK DISCONNECT 70 PSI NOMINAL PRESSURE COUPLINGS

LIQUID OXYGEN QUICK DISCONNECT 70 PSI NOMINAL PRESSURE COUPLINGS

FIGURE & INDEX NO.	PART NUMBER	1 2 3 4 5 6 7 NOMENCLATURE	UNITS PER ASSY.	USABLE ON CODE	S/C NO.
352A-1	200000-2	COUPLING, Liquid oxygen quick disconnect non-self sealing 70 psi nominal pressure (ESSX) (83533) (see figure 352 for next assembly)	1	BS	
-2	200003	. FITTING, Coupling liquid oxygen quick disconnect (ESSX) (83533)	1	BS	
-3	59009	. PIN, Valve quick disconnect (ESSX) (83533)	2	BS	
-4	199009	. SEAT, Coupling liquid oxygen quick disconnect (ESSX) (83533)	1	BS	
-5	200001	. BODY, Coupling liquid oxygen quick disconnect (ESSX) (83533)	1	BS	
-6	200000-1	COUPLING, Liquid oxygen quick disconnect non-self sealing 70 psi nominal pressure (ESSX) (83533) (see figure 352 for next assembly)	1	BS	
-7	5000-68-W	. RETAINING RING, Truarc (WKI) (79136)	1	BS	
-8	200007	. CAP SLEEVE, Liquid oxygen quick disconnect (ESSX) (83533)	1	BS	
-9	200006	. POPPET, Coupling liquid oxygen quick disconnect (ESSX) (83533)	1	BS	
-10	199014	. BELLOWS (ESSX) (83533)	1	BS	
-11	200005	. FITTING, Coupling liquid oxygen quick disconnect (ESSX) (83533)	1	BS	
-12	200008	. SLEEVE, Coupling liquid oxygen quick disconnect (ESSX) (83533)	1	BS	
-13	199000-2	COUPLING, Liquid oxygen quick disconnect self-sealing 70 psi nominal pressure (ESSX) (83533) (see figure 352 for next assembly)	1	BS	
-14	199003	. SPRING HOUSING, Coupling liquid oxygen quick disconnect (ESSX) (83533)	1	BS	
-15	59015	. SPRING, Valve quick disconnect (ESSX) (83533)	1	BS	
-16	AF216CP18	. BALL (Air Force Drawing) (88042)	1	BS	
-17	199004	. PIN, Coupling liquid oxygen quick disconnect	2	BS	
-18	199002	. SEAT, Coupling liquid oxygen quick disconnect (ESSX) (83533)	1	BS	
-19	199001	. BODY, Coupling liquid oxygen quick disconnect (ESSX) (83533)	1	BS	
-20	199000-1	COUPLING, Liquid oxygen quick disconnect self-sealing 70 psi nominal pressure (ESSX) (83533) (see figure 352 for next assembly)	1	BS	
-21	199012	. SPRING HOUSING, Coupling liquid oxygen quick disconnect (ESSX) (83533)	1	BS	
-22	59015	. SPRING, Valve quick disconnect (ESSX) (83533)	1	BS	
-23	AF216CP18	. BALL (Air Force drawing) (88042)	1	BS	
-24	199009	. SEAT, Coupling liquid oxygen quick disconnect (ESSX) (83533)	1	BS	
-25	5000-68-W	. RETAINING RING, Truarc (WKI) (79136)	1	BS	
-26	199008	. SLEEVE, Coupling liquid oxygen quick disconnect (ESSX) (83533)	1	BS	
-27	199007	. CAP, Sleeve liquid oxygen quick disconnect (ESSX) (83533)	1	BS	
-28	200012	. RING, Friction (ESSX) (83533)	1	BS	
-29	199010	. BODY, Coupling liquid oxygen quick disconnect (ESSX) (83533)	1	BS	
-30	199015	. STEM, Coupling liquid oxygen quick disconnect (ESSX) (83533)	1	BS	
-31	199014	. BELLOWS (ESSX) (83533)	1	BS	
-32	199013	. SPRING (ESSX) (83533)	1	BS	
-33	199006	. POPPET COUPLING, Liquid oxygen quick disconnect (ESSX) (83533)	1	BS	
-34	225000-2	COUPLING, Liquid oxygen quick disconnect non-self-sealing 70 psi nominal pressure (ESSX) (83533) (see figure 352 for breakdown)	1	BS	
-35	200018	. FITTING, Coupling liquid oxygen quick disconnect (ESSX) (83533)	1	BS	
-36	199009	. SEAT, Coupling liquid oxygen quick disconnect (ESSX) (83533)	1	BS	
-37	59009	. PIN, Valve quick disconnect (ESSX) (83533)	2	BS	
-38	200001	. BODY, Coupling liquid oxygen quick disconnect (ESSX) (83533)	1	BS	
-39	225000-1	COUPLING, Liquid oxygen quick disconnect non-self-sealing 70 psi nominal pressure (ESSX) (83533) (see figure 352 for next assembly)	1	BS	
-40	5000-68-W	. RETAINING RING, Truarc (WKI) (79136)	1	BS	
-41	200006	. POPPET, Coupling liquid oxygen quick disconnect (ESSX) (83533)	1	BS	
-42	199013	. SPRING (ESSX) (83533)	1	BS	
-43	199014	. BELLOWS (ESSX) (83533)	1	BS	
-44	200017	. FITTING, Coupling liquid oxygen quick disconnect (ESSX) (83533)	1	BS	
-45	200012	. RING, Friction (ESSX) (83533)	1	BS	
-46	200007	. CAP, Sleeve liquid oxygen quick disconnect (ESSX) (83533)	1	BS	
-47	200008	. SLEEVE, Coupling liquid oxygen quick disconnect (ESSX) (83533)	1	BS	

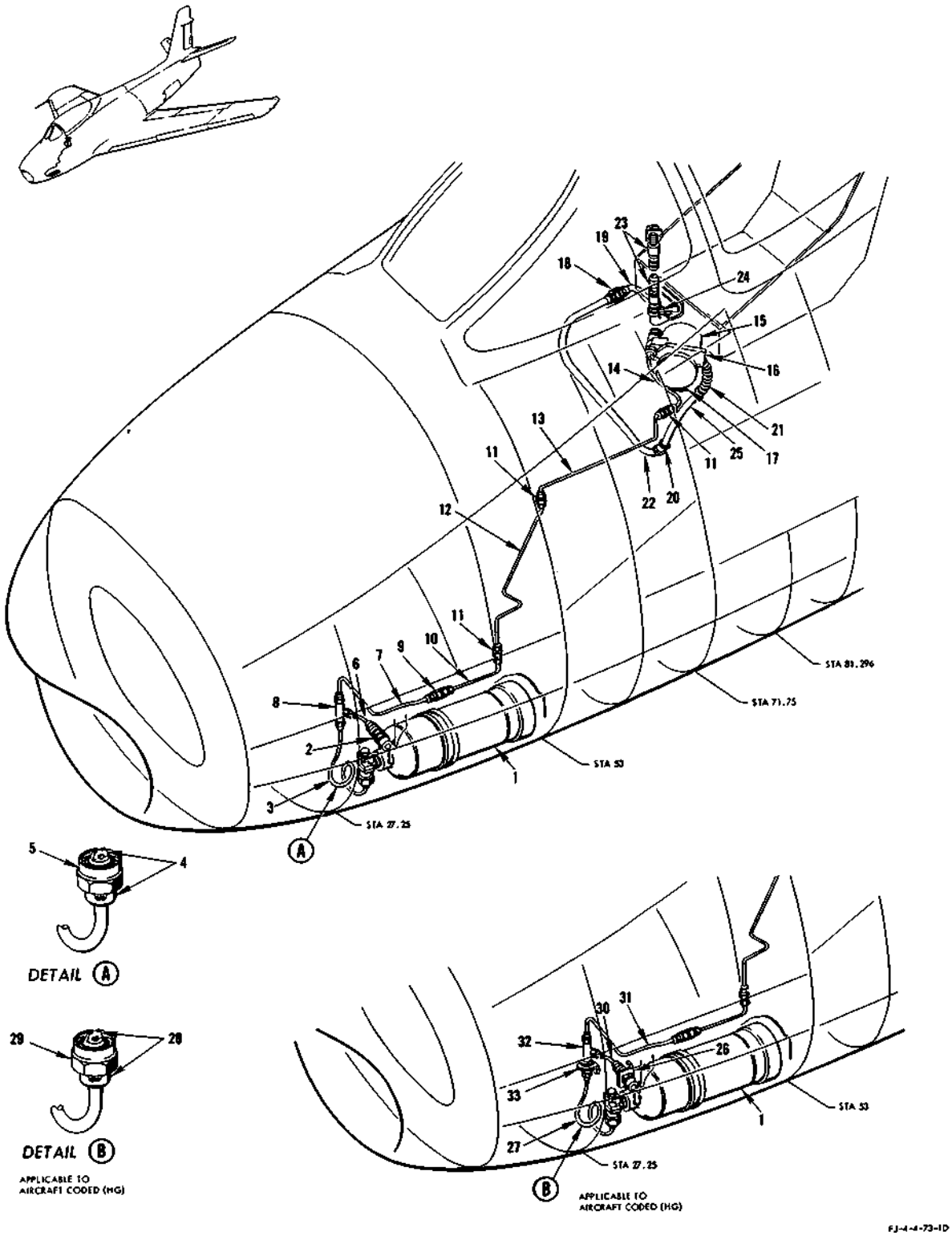

FIGURE 353 - GASEOUS OXYGEN - APPLICABLE TO AIRCRAFT CODED (BR)

GASEOUS OXYGEN - APPLICABLE TO AIRCRAFT CODED (BR)

FIGURE & INDEX NO.	PART NUMBER	1 2 3 4 5 6 7 NOMENCLATURE	UNITS PER ASSY.	USABLE ON CODE	S/C NO.
353-1	SK1084-514	CYLINDER, Oxygen (GFP)	1	BR	357
-2	3409	FILLER ASSEMBLY, High pressure oxygen (RYY) (86831) (supersedes 3279 (RYY) (86831) for future procurement)	1	BR	357
-3	181-73310-3	LINE ASSEMBLY, Oxygen cylinder valve	1	AM	357
-4	181-73309	. ADAPTER, Oxygen cylinder valve	1	AM	357
-5	156-73314	. NUT, Oxygen cylinder valve	1	AM	357
	AN6227-3	. PACKING	1	AM	357
-6	181-73310-7	LINE ASSEMBLY, Oxygen filler	1	AM	357
-7	181-73310-11	LINE ASSEMBLY, Oxygen check valve forward	1	AM	357
	755-3-2-6	CLAMP (AP) (00502)	5	AM	357
	AN520-10R10	SCREW	5	AM	357
	2W18-10	WASHER, Flat (NA) (89372)	10	AM	357
	AN365-1032	NUT	5	AM	357
-8	AN795-3	TEE	1	AM	357
-9	AN6014-1	VALVE	1	BR	357
-10	181-73310-15	LINE ASSEMBLY, Oxygen check valve	1	BR	357
-11	160-73302-3	FITTING, Oxygen system fuselage station 158 bulkhead (supersedes 160-73302 for future procurement)	3	BR	357
	AN924-3D	NUT	3	BR	357
	AN961-616	WASHER	6	BR	357
-12	209-73310-3	LINE ASSEMBLY, Oxygen bulkhead union station 51 aft and up to bulkhead union station 56	1	BR	357
-13	181-73310-59	LINE ASSEMBLY, Oxygen distributor valve intermediate	1	BR	357
-14	181-73310-27	LINE ASSEMBLY, Oxygen distributor valve aft	1	BR	357
-15	2867-B1	REGULATOR, Automatic positive pressure diluter demand (GFP)	1	BR	357
	AN515-8R7	SCREW	3	BR	357
	2W18-8L	WASHER, Flat (NA) (89372)	3	BR	357
-16	181-73307-11	SUPPORT ASSEMBLY, Oxygen regulator station 75 (supersedes 181-73307 for future procurement)	1	BR	357
	ATTACHING PARTS				
	AN526-832R8	SCREW	4	BR	357
	2W18-8L	WASHER, Flat (NA) (89372)	8	BR	357
	AN365-832	NUT	4	BR	357
	---*---				
	181-73314	. SUPPORT, Oxygen regulator	1	BR	357
	181-73315	. BRACKET, Oxygen regulator	1	BR	357
-17	209-73317	. CLAMP ASSEMBLY, Oxygen regulator station 75 (make from 902-375 (MAR) (98625)	1	BR	357
	AN526-832R8	. SCREW	3	BR	357
	2W18-8	. WASHER, Flat (NA) (89372)	5	BR	357
	AN365-832	. NUT	3	BR	357
-18	AN832-12D	UNION	1	BR	357
	AN924-12D	NUT	1	BR	357
	2W18-1716	WASHER, Flat (NA) (89372)	1	BR	357
-19	181-73310-35	LINE ASSEMBLY, Oxygen breathing tube aft	1	BR	357
-20	3H2-12-15	HOSE (NA) (89372)	1	BR	357
	AN737RM38	CLAMP	2	BR	357
-21	AN6003T12A	TUBE ASSEMBLY	1	BR	357
	AN737RM38	CLAMP	2	BR	357
-22	181-73310-45	LINE ASSEMBLY, Oxygen breathing tube forward	1	BR	357
-23	D100-528	TUBE ASSEMBLY, Oxygen breathing and radio (DARL) (83452) (interchangeable with AT208-2 (Aero-Tube Co) (98672))	1	BR	357
-24	194-73311	COLLAR, Ejection seat oxygen tube (supersedes 181-73311 for future procurement)	1	BR	357
-25	181-73310-49	LINE ASSEMBLY, Oxygen breathing tube upper	1	BR	357
	755-12-2-8	CLAMP (AP) (00502)	1	BR	357
	AN520-10R10	SCREW	1	BR	357
	2W18-10L	WASHER, Flat (NA) (89372)	1	BR	357
	AN365-1032	NUT	1	BR	357
-26	194-73310	SUPPORT, Oxygen filler assembly	1	BR	357
-27	209-73310-7	LINE ASSEMBLY, Tee station 33 to oxygen bottle	1	HG	357
-28	181-73309	. ADAPTER, Oxygen cylinder valve	1	HG	357
-29	156-73314	. NUT, Oxygen cylinder valve	1	HG	357
	AN6227-3	. PACKING	1	HG	357
-30	209-73310-5	LINE ASSEMBLY, Oxygen filler valve to tee station 33	1	HG	357
-31	209-73310-9	LINE ASSEMBLY, Tee station 33 aft to check valve	1	HG	357
-32	209-73313-3	FITTING, Oxygen system pilot breathing (supersedes 209-73312 for future procurement)	1	HG	357
	AN924-3D	NUT	1	HG	357
	2W18-616	WASHER, Flat (NA) (89372)	2	HG	357
-33	209-73311	CLIP, Oxygen system fitting support fuselage station 33.625 LH	1	HG	357
	AN520-10R10	SCREW	2	HG	357
	2W18-10L	WASHER, Flat (NA) (89372)	4	HG	357
	AN365-1032	NUT	2	HG	357

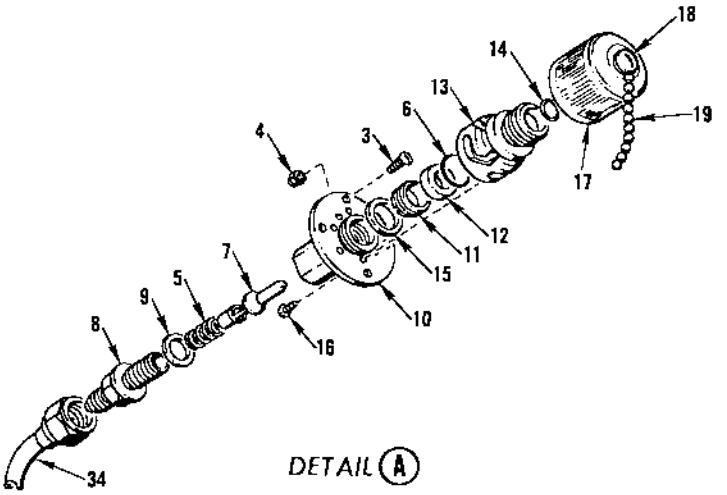

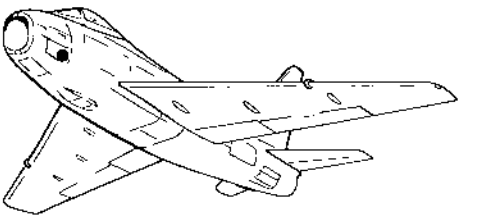

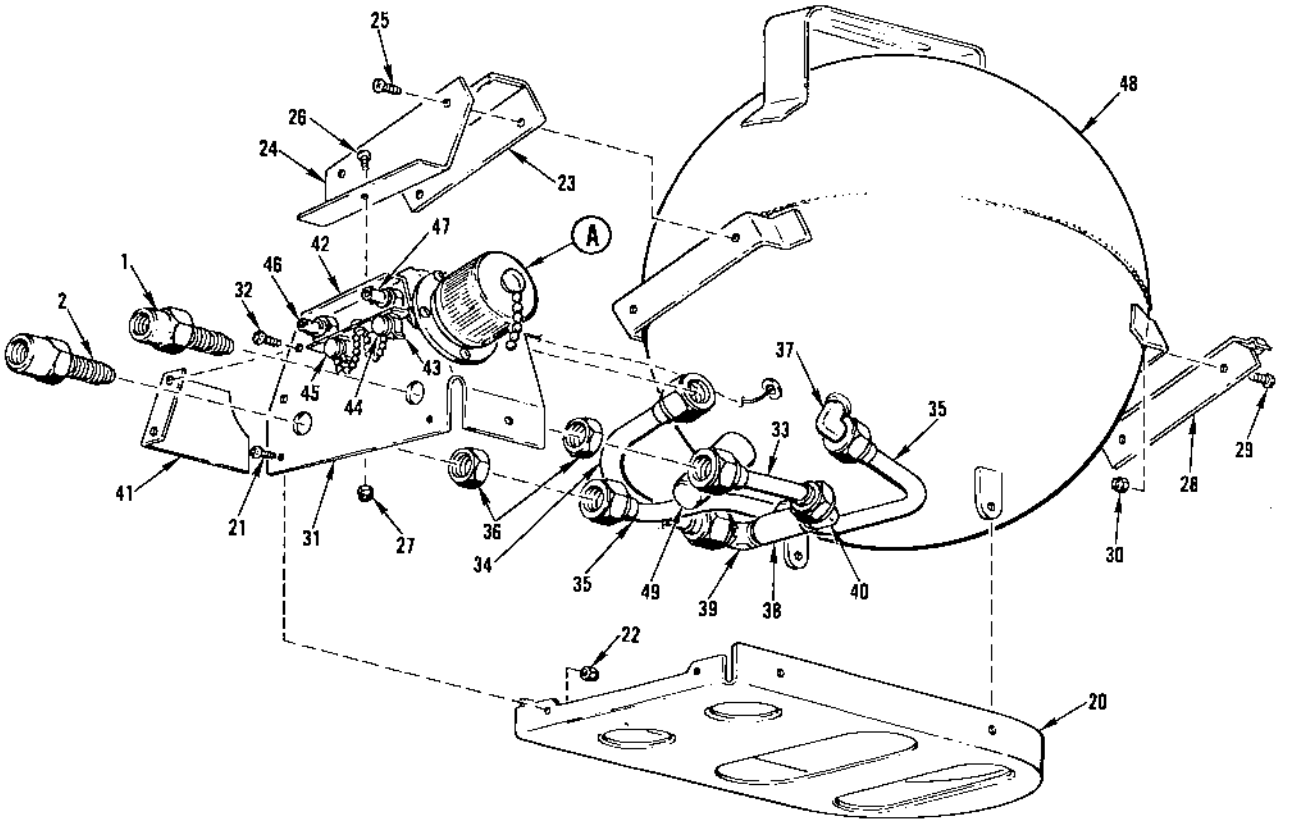

FJ-4/B-4-73-2

FIGURE 354 - LIQUID OXYGEN CONTAINER AND FILLER VALVE - APPLICABLE TO AIRCRAFT CODED (BS)

ENGINE AND ACCESSORIES ASSEMBLY

FIGURE & INDEX NO.	PART NUMBER	1	2	3	4	5	6	7	NOMENCLATURE	UNITS PER ASSY.	USABLE ON CODE	S/C NO.
355	209-42001	*							ENGINE AND ACCESSORIES ASSEMBLY, Complete	1	AP	271
	209-42001-11	*							ENGINE AND ACCESSORIES ASSEMBLY, Complete	1	AQ	
-1	J65-W-4B		.						ENGINE, Jet (Wright Aeronautical Corp) (66640) (GFP) (for breakdown see Technical Manual AN 02B-35AAC-4) (may be used in lieu of J65-W-16A (Wright Aeronautical Corp) (66640) (GFP) with the following changes (replace W-4B tailcone and thermocouple harness lead from a W-16 or W-16A engine))	1	AP	
	J65-W-16		.						ENGINE, Jet (Wright Aeronautical Corp) (66640) (GFP) (for breakdown see Technical Manual AN 02B-35AAC-4)	1	GK	
	J65-W-16A		.						ENGINE, Jet (Wright Aeronautical Corp) (66640) (GFP) (for breakdown see Technical Manual AN 02B-35AAC-4) (interchangeable with J65-W-4B (Wright Aeronautical Corp) (66640) (GFP) (J65-W-4B tailcone and thermocouple harness lead is removed and replaced with J65-W-16 or J65-W-16A tailcone and harness lead)	1	GL	
-2	209-42002-101		.						TAIL PIPE ASSEMBLY, Engine exhaust (supersedes 209-42002 for future procurement)	1	AP	271
-3	209-42052		.	.					RESTRICTOR, Engine tail pipe temperature adjusting (22.5° arc) (used on 209-42002 only)	1	AP	271
	209-42031		.	.					RESTRICTOR, Engine tail pipe temperature adjusting (22.5° arc) (used on 209-4202-101 only)	1	AP	271
-4	209-42051-3		.	.					RESTRICTOR, Engine tail pipe temperature adjusting (45° arc) (used on 209-42002 only)	1	AP	271
	203-42032		.	.					RESTRICTOR, Engine tail pipe temperature adjusting (45° arc) (used on 209-42002-101 only)	1	AP	271
-5	5B18C4A		.	.					BOLT, 1/4-28 corrosion-resistant (NA) (89372)	16	AP	271
-6	0428AF10		.	.					NUT (DLR) (82831)	16	AP	271
-7	194-42007-1		.	.					ANGLE, Engine exhaust tail pipe radial support LH	1	AP	271
-8	194-42007-2		.	.					ANGLE, Engine exhaust tail pipe radial support RH	1	AP	271
	ATTACHING PARTS											
	5B18C7A		.	.					BOLT, 1/4-28 corrosion-resistant (NA) (89372)	4	AP	271
	0428AF10		.	.					NUT (DLR) (82831)	4	AP	271
	---*---											
	209-42002-135		.	.					WELD ASSEMBLY, Engine exhaust tail pipe assembly	1	AP	271
	209-42202-133		.	.	.				WELD SUBASSEMBLY, Engine exhaust tail pipe forward attaching	1	AP	271
-9	194-42004		.	.	.	.			RING ASSEMBLY, Engine exhaust tail pipe forward attaching	1	AP	271
	209-42002-137		.	.	.				WELD SUBASSEMBLY, Engine exhaust tail pipe forward attaching	1	AP	271
	209-42068		.						TAIL PIPE ASSEMBLY, Engine exhaust 21.875 diameter for J65-W-7 tailcone	1	GK	425
	209-42068-101		.						TAIL PIPE ASSEMBLY, Engine exhaust 21.875 diameter for J65-W-7 tailcone	1	GL	394A
-10	194-42007-1		.	.					ANGLE, Engine exhaust tail pipe radial support LH	1	AQ	
-11	194-42007-2		.	.					ANGLE, Engine exhaust tail pipe radial support RH	1	AQ	
	ATTACHING PARTS											
	5B18C7A		.	.					BOLT, 1/4-28 corrosion-resistant (NA) (89372)	4	AQ	
	0428AF10		.	.					NUT (DLR) (82831)	4	AQ	
	---*---											
-12	209-42031		.	.					RESTRICTOR, Engine tail pipe temperature adjusting (25.5° arc)	2	AQ	
-13	209-42032		.	.					RESTRICTOR, Engine tail pipe temperature adjusting (45° arc)	5	AQ	
-14	5B18C4A		.	.					BOLT, 1/4-28 corrosion-resistant (NA) (89372)	16	GL	
	5B18C4A		.	.					BOLT, 1/4-28 corrosion resistant (NA) (89372)	14	GK	425
-15	0428AF10		.	.					NUT (DLR) (82831)	16	GL	
	0428AF10		.	.					NUT (DLR) (82831)	14	GK	425
	209-42068-123		.	.					TAIL PIPE SUBASSEMBLY, Engine exhaust 21.875 diameter for J65-W-7 tailcone	1	GL	
	209-42068-23		.	.					TAIL PIPE SUBASSEMBLY, Engine exhaust 21.875 diameter for J65-W-7 tailcone	1	GK	425
	209-42068-121		.	.	.				SEAM WELD ASSEMBLY, Engine exhaust 21.875 diameter for J65-W-7 tailcone tail pipe subassembly	1	GL	
	209-42068-21		.	.	.				SEAM WELD ASSEMBLY, Engine exhaust 21.875 fiameter for J65-W-7 tailcone tail pipe subassembly	1	GK	425
-16	209-42065		.	.	.	.			RING ASSEMBLY, Engine exhaust tail pipe	1	AQ	
-17	AN995N40		.						WIRE (nickel-chromium-iron alloy 0.040 inch diameter) (used to install all blankets)	AR		
-18	194-42009		.						CLIP, Engine tailcone insulation blanket retaining	11		
-19	BL-10615-15	*1	.						BLANKET INSULATION, Engine exhaust tail pipe (JM) (75165) (stainless steel)	1		
	BL-10615-5	*1	.						BLANKET INSULATION, Engine exhaust tail pipe (JM) (75165) (aluminum)	1		271
	13-21495-15	*1	.						BLANKET INSULATION, Engine exhaust tail pipe (TMH) (78741) (stainless steel)	1		
	13-21495-5	*1	.						BLANKET INSULATION, Engine exhaust tail pipe (TMH) (78741) (aluminum)	1		271
	5-54818-15	*1	.						BLANKET INSULATION, Engine exhaust tail pipe (FAHJ) (92526) (stainless steel)	1		
	5-54818-5	*1	.						BLANKET INSULATION, Engine exhaust tail pipe (FAHJ) (92526) (aluminum)	1		
-20	BL-10615-13	*2	.						BLANKET INSULATION, Engine exhaust tail pipe (JM) (75165) (stainless steel)	1		
	BL-10615-3	*2	.						BLANKET INSULATION, Engine exhaust tail pipe (JM) (75165) (aluminum)	1		271
	13-21495-13	*2	.						BLANKET INSULATION, Engine exhaust tail pipe (TMH) (78741) (stainless steel)	1		
	13-21495-3	*2	.						BLANKET INSULATION, Engine exhaust tail pipe (TMH) (78741) (aluminum)	1		
	5-54818-13	*2	.						BLANKET INSULATION, Engine exhaust tail pipe (FAHJ) (92526) (stainless steel)	1		
	5-54818-3	*2	.						BLANKET INSULATION, Engine exhaust tail pipe (FAHJ) (92526) (aluminum)	1		

ENGINE AND ACCESSORIES ASSEMBLY

FIGURE & INDEX NO.	PART NUMBER	1	2	3	4	5	6	7	NOMENCLATURE	UNITS PER ASSY.	USABLE ON CODE	S/C NO.
355-21	BL-10615-15	*3	.						BLANKET INSULATION, Engine exhaust tail pipe (JM) (75165) (stainless steel)	1	AP	
	BL-10615-5	*3	.						BLANKET INSULATION, Engine exhaust tail pipe (JM) (75165) (aluminum)	1	AP	271
	11-56923-15	*3	.						BLANKET INSULATION, Engine exhaust tail pipe (JM) (75165) (stainless steel)	1	AQ	
	13-21495-15	*3	.						BLANKET INSULATION, Engine exhaust tail pipe (TMH) (78741) (stainless steel)	1	AP	
	13-21495-5	*3	.						BLANKET INSULATION, Engine exhaust tail pipe (TMH) (78741) (aluminum)	1	AP	271
	13-21571-15	*3	.						BLANKET INSULATION, Engine exhaust tail pipe TMH) (78741) (stainless steel)	1	AQ	
	13-21571-5	*3	.						BLANKET INSULATION, Engine exhaust tail pipe (TMH) (78741) (aluminum)	1	AQ	
	3-55849-5	*3	.						BLANKET INSULATION, Engine exhaust tail pipe (FAHJ) (92526) (aluminum)	1	AQ	
	5-54818-15	*3	.						BLANKET INSULATION, Engine exhaust tail pipe (FAHJ) (92526) (SST)	1	AP	
	5-54818-5	*3	.						BLANKET INSULATION, Engine exhaust tail pipe (FAHJ) (92526) (aluminum)	1	AP	271
-22	BL-10615-13	*4	.						BLANKET INSULATION, Engine exhaust tail pipe (JM) (75165) (stainless steel)	1	AP	
	BL-10615-3	*4	.						BLANKET INSULATION, Engine exhaust tail pipe (JM) (75165) (aluminum)	1	AP	
	11-56923-13	*4	.						BLANKET INSULATION, Engine exhaust tail pipe (FAHJ) (92526) (stainless steel)	1	AQ	
	13-21495-13	*4	.						BLANKET INSULATION, Engine exhaust tail pipe (TMH) (78741) (stainless steel)	1	AP	
	13-21495-3	*4	.						BLANKET INSULATION, Engine exhaust tail pipe (TMH) (78741) (aluminum)	1	AP	271
	13-21571-13	*4	.						BLANKET INSULATION, Engine exhaust tail pipe (TMH) (78741) (stainless steel)	1	AQ	
	13-21571-3	*4	.						BLANKET INSULATION, Engine exhaust tail pipe (TMH) (78741) (aluminum)	1	AQ	
	3-55849-3	*4	.						BLANKET INSULATION, Engine exhaust tail pipe (FAHJ) (92526) (aluminum)	1	AQ	
	5-54818-13	*4	.						BLANKET INSULATION, Engine exhaust tail pipe (FAHJ) (92526) (stainless steel)	1	AP	
	5-54818-3	*4	.						BLANKET INSULATION, Engine exhaust tail pipe (FAHJ) (92526) (aluminum)	1	AP	271
-23	BL-10332-19	*5	.						BLANKET INSULATION, Engine cone (JM) (75165) (stainless steel)	1	AP	
	BL-10332-9	*5	.						BLANKET INSULATION, Engine cone (JM) (75165) (aluminum)	1	AP	271
	BL-10883-13	*5	.						BLANKET INSULATION, Engine cone (JM) (75165) (stainless steel)	1	AQ	
	BL-10833-3	*5	.						BLANKET INSULATION, Engine cone (JM) (75165) (aluminum)	1	AQ	
	1-55844-3	*5	.						BLANKET INSULATION, Engine cone (FAHJ) (92526) (aluminum)	1	AQ	
	13-21280-19	*5	.						BLANKET INSULATION, Engine cone (TMH) (78741) (stainless steel)	1	AP	
	13-21280-9	*5	.						BLANKET INSULATION, Engine cone (TMH) (78741) (aluminum)	1	AP	271
	13-21754-13	*5	.						BLANKET INSULATION, Engine cone (TMH) (78741) (stainless steel)	1	AQ	
	13-21754-3	*5	.						BLANKET INSULATION, Engine cone (TMH) (78741) (aluminum)	1	AQ	
	2-53789-19	*5	.						BLANKET INSULATION, Engine cone (FAHJ) (92526) (stainless steel)	1	AP	
	2-53789-9	*5	.						BLANKET INSULATION, Engine cone (FAHJ) (92526) (aluminum)	1	AP	271
	2-57942-13	*5	.						BLANKET INSULATION, Engine cone (FAHJ) (92526) (stainless steel)	1	AQ	
-24	BL-10332-17	*6	.						BLANKET INSULATION, Engine cone (JM) (75165) (stainless steel)	1	AP	
	BL-10332-7	*6	.						BLANKET INSULATION, Engine cone (JM) (75165) (aluminum)	1	AP	271
	BL-10883-15	*6	.						BLANKET INSULATION, Engine cone (JM) (75165) (stainless steel)	1	AQ	
	BL-10883-5	*6	.						BLANKET INSULATION, Engine cone (JM) (75165) (aluminum)	1	AQ	
	1-55844-5	*6	.						BLANKET INSULATION, Engine cone (FAHJ) (92526) (aluminum)	1	AQ	
	13-21280-17	*6	.						BLANKET INSULATION, Engine cone (TMH) (78741) (stainless steel)	1	AP	
	13-21280-7	*6	.						BLANKET INSULATION, Engine cone (TMH) (78741) (aluminum)	1	AP	271
	13-21754-15	*6	.						BLANKET INSULATION, Engine cone (TMH) (78741) (stainless steel)	1	AQ	
	13-21754-5	*6	.						BLANKET INSULATION, Engine cone (TMH) (78741) (aluminum)	1	AQ	
	2-53789-17	*6	.						BLANKET INSULATION, Engine cone (FAHJ) (92526) (stainless steel)	1	AP	
	2-53789-7	*6	.						BLANKET INSULATION, Engine cone (FAHJ) (92526) (aluminum)	1	AP	271
-25	BL-10332-13	*7	.						BLANKET INSULATION, Engine cone (JM) (75165) (stainless steel)	1	AP	
	BL-10332-3	*7	.						BLANKET INSULATION, Engine cone (JM) (75165) (aluminum)	1	AP	271
	BL-10883-17	*7	.						BLANKET INSULATION, Engine cone (JM) (75165) (stainless steel)	1	AQ	
	BL-10883-7	*7	.						BLANKET INSULATION, Engine cone (JM) (75165) (aluminum)	1	AQ	
	1-55844-7	*7	.						BLANKET INSULATION, Engine cone (FAHJ) (92526) (aluminum)	1	AQ	
	13-21280-13	*7	.						BLANKET INSULATION, Engine cone (TMH) (78741) (stainless steel)	1	AP	
	13-21280-3	*7	.						BLANKET INSULATION, Engine cone (TMH) (78741) (aluminum)	1	AP	271
	13-21754-17	*7	.						BLANKET INSULATION, Engine cone (TMH) (78741) (stainless steel)	1	AQ	
	13-21754-7	*7	.						BLANKET INSULATION, Engine cone (TMH) (78741) (aluminum)	1	AQ	
	2-53789-13	*7	.						BLANKET INSULATION, Engine cone (FAHJ) (92526) (stainless steel)	1	AP	
	2-53789-3	*7	.						BLANKET INSULATION, Engine cone (FAHJ) (92526) (aluminum)	1	AP	271
	2-57942-17	*7	.						BLANKET INSULATION, Engine cone (FAHJ) (92526) (stainless steel)	1	AQ	
-26	BL-10332-15	*8	.						BLANKET INSULATION, Engine cone (JM) (75165) (stainless steel)	1	AP	
	BL-10332-5	*8	.						BLANKET INSULATION, Engine cone (JM) (75165) (aluminum)	1	AP	271
	BL-10883-19	*8	.						BLANKET INSULATION, Engine cone (JM) (75165) (stainless steel)	1	AQ	
	BL-10883-9	*8	.						BLANKET INSULATION, Engine cone (JM) (75165) (aluminum)	1	AQ	
	1-55844-9	*8	.						BLANKET INSULATION, Engine cone (FAHJ) (92526) (aluminum)	1	AQ	
	13-21280-15	*8	.						BLANKET INSULATION, Engine cone (TMH) (78741) (stainless steel)	1	AP	
	13-21280-5	*8	.						BLANKET INSULATION, Engine cone (TMH) (78741) (aluminum)	1	AP	271
	13-21754-19	*8	.						BLANKET INSULATION, Engine cone (TMH) (78741) (stainless steel)	1	AQ	
	13-21754-9	*8	.						BLANKET INSULATION, Engine cone (TMH) (78741) (aluminum)	1	AQ	
	2-53789-15	*8	.						BLANKET INSULATION, Engine cone (FAHJ) (92526) (stainless steel)	1	AP	
	2-53789-5	*8	.						BLANKET INSULATION, Engine cone (FAHJ) (92526) (aluminum)	1	AP	271
	2-57492-19	*8	.						BLANKET INSULATION, Engine cone (FAHJ) (92526) (stainless steel)	1	AQ	
-27	194-42005		.						LINK, Engine exhaust tail pipe axial support	4	AP	271
	209-42066		.						LINK, Engine exhaust tail pipe axial support	4	AQ	
	ATTACHING PARTS											
	1N8-5		.						NUT, Castellated inconel "X" (NA) (89372)	12		
	2W17-516		.						WASHER, Corrosion-resistant (NA) (89372)	12		
	5B26-516-10		.						BOLT, Inconel "X" (NA) (89372)	12		

---*---

ENGINE AND ACCESSORIES ASSEMBLY

FIGURE & INDEX NO.	PART NUMBER	1	2	3	4	5	6	7	NOMENCLATURE	UNITS PER ASSY.	USABLE ON CODE	S/C NO.
355-28	194-42008-21	.							RING ASSEMBLY, Engine exhaust cone attaching (supersedes 194-42008 for future procurement)	1	AP	271
-29	209-42064	.							RING ASSEMBLY, Engine cone attaching	1	AQ	
	194-42043	.							SUPPORT, Engine combustion chamber fuel drain line	1		
-30	135897	.							GEAR BOX (Wright Aeronautical Corp) (66640)	1		
	135880	.							SPLINE SHAFT (Wright Aeronautical Corp) (66640)	1		
-31	AN814-4DL	.							PLUG AND BLEEDER	1		
	MS29512-4	.							GASKET	1		
	209-58013	.							HYDRAULIC EQUIPMENT INSTALLATION, Engine	1		
	209-58650-11	.	.						HYDRAULIC EQUIPMENT ASSEMBLY, Pump variable volume engine driven	1		
	ATTACHING PARTS											
	AN4044-1	.	.						GASKET	1		
	---*---											
-32	AA-65306-R	.	.	.					PUMP ASSEMBLY, Variable delivery (VI) (62983) (supersedes AA-60306-R (VI) (62983) for future procurement (interchangeable with AA-60306-RB (VI) (62983))	1		
	AN837-4D	.	.	.					ELBOW	1		
	AN6289-4	.	.	.					NUT	1		
	AN6291-4	.	.	.					RING	1		
	AN6290-4	.	.	.					GASKET	1		
	AN833-6D	.	.	.					ELBOW	1		
	AN6289-6	.	.	.					NUT	1		
	AN6291-6	.	.	.					RING	1		
	AN6290-6	.	.	.					GASKET	1		
-33	MS28741-12-0240	.	.						HOSE ASSEMBLY (No. 1 Flight Control System - Suction)	1		
	209-58401-15	.	.						TAG, Hydraulic hose assembly identification (No. 1 Flight Control System - Suction)	1		
-34	150-S1-12	.	.						COUPLING HALF, Self-sealing (AQ) (00624)	1		
	C155-25-12	.	.						NUT, Union (AQ) (00624)	1		
-35	MS28741-6-0290	.	.						HOSE ASSEMBLY (No. 1 Flight Control System - case drain)	1		
	209-58401-11	.	.						TAG, Hydraulic hose assembly identification (No. 1 Flight Control System - case drain)	1		
-36	150-S1-6	.	.						COUPLING HALF, Self-sealing (AQ) (00624)	1		
	C155-25-8	.	.						NUT, Union (AQ) (00624)	1		
-37	AN6292-8-14-1/2	.	.						HOSE ASSEMBLY (No. 1 Flight Control System - pressure)	1		
-38	AN815-8D	.	.						UNION	1		
	AN6290-8	.	.						GASKET	1		
	AN939D8	.	.						ELBOW	1		
	150-S1-8	.	.						COUPLING HALF, Self-sealing (AQ) (00624)	1		
	C155-25-8	.	.						NUT, Union (AQ) (00624)	1		
-39	MS28741-4-0490	.	.						HOSE ASSEMBLY (No. 1 Flight Control System - pump seal drain)	1		
	209-58650-21	.	.						HYDRAULIC EQUIPMENT ASSEMBLY, Pump variable volume engine driven	1		
	ATTACHING PARTS											
	AN4044-1	.	.						GASKET	1		
	---*---											
-40	AA-65036-R	.	.	.					PUMP ASSEMBLY, Variable delivery (VI) (62983) (supersedes AA-60306-R (VI) (62983) for future procurement) (interchangeable with AA-60306-RB (VI) (62983)	1		
	209-58122	.	.	.					FITTING, Hydraulic bulkhead 90° elbow	1		
	AN837-4D	.	.	.					ELBOW	1		
	AN6289-4	.	.	.					NUT	1		
	AN6291-4	.	.	.					RING	1		
	AN6290-4	.	.	.					GASKET	1		
	AN6289-6	.	.	.					NUT	1		
	AN6291-6	.	.	.					RING	1		
	AN6290-6	.	.	.					GASKET	1		
-41	MS28741-12-0134	.	.						HOSE ASSEMBLY (No. 2 Flight Control - suction)	1		
	AN6290-12	.	.						GASKET	2		
	AN941-12D	.	.						ELBOW	1		
	AN815-12D	.	.						UNION	1		
	209-58401-17	.	.						TAG, Hydraulic hose assembly identification (No. 2 Flight Control System - suction)	1		
-42	150-S1-12	.	.						COUPLING HALF, Self-sealing (AQ) (00624)	1		
	C155-25-12	.	.						NUT, Union (AQ) (00624)	1		
-43	MS28741-6-0190	.	.						HOSE ASSEMBLY (No. 2 Flight Control System - case drain)	1		
	209-58401-13	.	.						TAG, Hydraulic hose assembly identification (No. 2 Flight Control System - case drain)	1		
-44	150-S1-6	.	.						COUPLING HALF, Self-sealing (AQ) (00624)	1		
	C155-25-8	.	.						NUT, Union (AQ) (00624)	1		
-45	AN6292-8-27-1/2	.	.						HOSE ASSEMBLY (No. 2 Flight Control - pressure)	1		
-46	150-S1-8	.	.						COUPLING HALF, Self-sealing (AQ) (00624)	1		
	C155-25-8	.	.						NUT, Union (AQ) (00624)	1		
	209-58401-5	.	.						TAG, Hydraulic hose assembly identification (No. 2 Flight Control System - pressure)	1		
-47	209-47801-23	.	.						LINE ASSEMBLY, No. 2 Flight Control pump seal drain to lube system drain manifold	1		
	209-58650-31	.	.						HYDRAULIC EQUIPMENT ASSEMBLY, Pump variable volume engine driven (209-58650-31 together with attaching hoses and fittings is interchangeable with 209-58651 and its attaching hoses and fittings)	1	ET	

ENGINE AND ACCESSORIES ASSEMBLY

FIGURE & INDEX NO.	PART NUMBER	1	2	3	4	5	6	7	NOMENCLATURE	UNITS PER ASSY.	USABLE ON CODE	S/C NO.
355	ATTACHING PARTS											
	AN4044-1	.	.						GASKET	1	ET	
	---*---											
-48	AA-65306-R	.	.	.					PUMP ASSEMBLY, Variable delivery (VI) (62983) (supersedes AA-60306-R (VI) (62983) for future procurement) (interchangeable with AA-60306-RB (VI) (62983))	1	ET	
	209-58122	.	.	.					FITTING, Hydraulic bulkhead 90° elbow	1	ET	
	AN6290-6	.	.	.					GASKET	1	ET	
	AN6291-6	.	.	.					RING	1	ET	
	AN6289-6	.	.	.					NUT	1	ET	
	AN834-4D	.	.	.					TEE	1	ET	
	AN6290-4	.	.	.					GASKET	1	ET	
	AN6291-4	.	.	.					RING	1	ET	
	AN6289-4	.	.	.					NUT	1	ET	
-49	MS28741-12-0134	.	.						HOSE ASSEMBLY (Utility Hydraulic System - suction) (used on 209-58650-31)	1	ET	
	187-58363-5	.	.						TAG, Hydraulic hose assembly identification (utility suction)	1	ET	
-50	150-S1-12	.	.						COUPLING HALF, Self-sealing (AQ) (00624) (used on 209-58650-31)	1	ET	
	C155-25-12	.	.						NUT, Union (AQ) (00624) (used on 209-58650-31)	1	ET	
-51	AN6292-8-18-1/2	.	.						HOSE ASSEMBLY (Utility Hydraulic System - pressure) (used on 209-58650-31)	1	ET	
	181-58269-3	.	.						TAG, Hydraulic hose assembly identification (utility pressure)	1	ET	
-52	150-S1-8	.	.						COUPLING HALF, Self-sealing (AQ) (00624) (used on 209-58650-31)	1	ET	
	C155-25-8	.	.						NUT, Union (AQ) (00624) (used on 209-58650-31	1	ET	
-53	MS28741-6-0160	.	.						HOSE ASSEMBLY (Utility Hydraulic System - case drain) (used on 209-58650-31)	1	ET	
-54	150-S1-6	.	.						COUPLING HALF, Self-sealing (AQ) (00624) (used on 209-58650-31)	1	ET	
	C155-25-8	.	.						NUT, Union (AQ) (00624) (used on 209-58650-31)	1	ET	
	187-58368-19	.	.						TAG, Hydraulic hose assembly identification (utility case drain)	1	ET	
	209-58651	.	.						HYDRAULIC EQUIPMENT ASSEMBLY, Pump engine driven variable delivery (209-58651 together with attaching hoses and fittings is interchangeable with 209-58650-31 and its attaching hoses and fittings)	1	ET	
	ATTACHING PARTS											
	AN4044-1	.	.						GASKET	1	ET	
	---*---											
-55	66WT200-1	.	.	.					PUMP ASSEMBLY, Variable delivery (NYB) (43491)	1	ET	
	AN837-6D	.	.	.					ELBOW	1	ET	
	AN6290-6	.	.	.					GASKET	1	ET	
	AN6291-6	.	.	.					RING	1	ET	
	AN6289-6	.	.	.					NUT	1	ET	
	AN834-4D	.	.	.					TEE	1	ET	
	AN6290-4	.	.	.					GASKET	1	ET	
	AN6291-4	.	.	.					RING	1	ET	
	AN6289-4	.	.	.					NUT	1	ET	
	AN893-151D	.	.	.					REDUCER	1	ET	
	AN6290-10	.	.	.					GASKET	1	ET	
	AN833-8D	.	.	.					ELBOW	1	ET	
	AN6290-8	.	.	.					GASKET	1	ET	
	AN6291-8	.	.	.					RING	1	ET	
	AN6289-8D	.	.	.					NUT	1	ET	
	AN637-12D	.	.	.					ELBOW	1	ET	
	AN6290-12	.	.	.					GASKET	1	ET	
	AN6291-12	.	.	.					RING	1	ET	
	AN6289-12D	.	.	.					NUT	1	ET	
-56	MS28741-12-0127	.	.						HOSE ASSEMBLY (Utility Hydraulic System - suction) (used on 209-58651)	1	ET	
	187-58368-5	.	.						TAG, Hydraulic hose assembly identification (utility suction)	1	ET	
	AN815-12D	.	.						UNION (used on 209-58651)	1	ET	
	AN939-12D	.	.						ELBOW (used on 209-58651)	1	ET	
	AN6290-12	.	.						GASKET (used on 209-58651)	1	ET	
-57	150-S1-12	.	.						COUPLING HALF (AQ) (00624) (used on 209-58651)	1	ET	
	C155-25-12	.	.						NUT, Union (AQ) (00624) (used on 209-58651)	1	ET	
-58	AN6292-8-14-1/2	.	.						HOSE ASSEMBLY (Utility System - pressure) (used on 209-58651)	1	ET	
	181-58269-3	.	.						TAG, Hydraulic hose assembly identification (utility pressure)	1	ET	
	AN815-8D	.	.						UNION (used on 209-58651)	1	ET	
	AN939-8D	.	.						ELBOW (used on 209-58651)	1	ET	
	AN6290-8	.	.						GASKET (used on 209-58651)	1	ET	
-59	150-S1-8	.	.						COUPLING HALF, Self-sealing (AQ) (00624) (used on 209-58651)	1	ET	
	C155-25-8	.	.						NUT, Union (AQ) (00624) (used on 209-58651)	1	ET	
-60	MS28741-6-0113	.	.						HOSE ASSEMBLY (Utility System - case drain) (used on 209-58651)	1	ET	
	187-58368-19	.	.						TAG, Hydraulic hose assembly identifiation (utility case drain)	1	ET	
	AN815-6D	.	.						UNION (used on 209-58651)	1	ET	
	AN939-6D	.	.						ELBOW (used on 209-58651)	1	ET	
	AB6290-6	.	.						GASKET (used on 209-58651)	1	ET	
-61	150-S1-6	.	.						COUPLING HALF, Self-sealing (AQ) (00624) (used on 209-58651)	1	ET	
	C155-25-8	.	.						NUT, Union (AQ) (00624) (used on 209-58651)	1	ET	
	209-58645	.	.						HYDRAULIC EQUIPMENT ASSEMBLY, Pump engine driven variable delivery (209-58645 together with attaching hoses and fittings is interchangeable with 209-58652 and its attaching hoses and fittings)	1	FR	

ENGINE AND ACCESSORIES ASSEMBLY

FIGURE & INDEX NO.	PART NUMBER	1	2	3	4	5	6	7	NOMENCLATURE	UNITS PER ASSY.	USABLE ON CODE	S/C NO.
355	ATTACHING PARTS											
	AN4044-1	.	.						GASKET	1	FR	
	---*---											
-62	AA-65502-R-S404	.	.	.					PUMP, Hydraulic variable volume (VI) (62983) (E13560 (VI) (62983) may be used as an alternate)	1	FR	
	AN834-4D	.	.	.					TEE	1	FR	
	AN6290-4	.	.	.					GASKET	1	FR	
	AN6291-4	.	.	.					RING	1	FR	
	AN6289-4	.	.	.					NUT	1	FR	
-63	MS28741-6-0160	.	.	.					HOSE ASSEMBLY (Utility System - case drain)	1	FR	
	187-58368-19	.	.	.					TAG, Hydraulic hose assembly identification (utility case drain)	1	FR	
	AN833-6D	.	.	.					ELBOW	1	FR	
	AN6290-6	.	.	.					GASKET	1	FR	
	AN6291-6	.	.	.					RING	1	FR	
	AN6289-6	.	.	.					NUT	1	FR	
-64	MS28741-16-0122	.	.	.					HOSE ASSEMBLY (Utility System - suction)	1	FR	
	187-58368-5	.	.	.					TAG, Hydraulic hose assembly identification (utility suction)	1	FR	
	AN837-16D	.	.	.					ELBOW	1	FR	
	AN6290-16	.	.	.					GASKET	1	FR	
	AN6291-16	.	.	.					RING	1	FR	
	AN6289-16D	.	.	.					NUT	1	FR	
-65	AN6292-8-18-1/2	.	.	.					HOSE ASSEMBLY (Utility System - pressure)	1	FR	
	181-58269-3	.	.	.					TAG, Hydraulic hose assembly identification (Utility pressure)	1	FR	
	209-58652	.	.						HYDRAULIC EQUIPMENT ASSEMBLY, Pump engine driven variable delivery (209-58652 together with attaching hoses and fittings is interchangeable with 209-58645 and its attaching hoses and fittings)	1	FR	
	ATTACHING PARTS											
	AN4044-1	.	.						GASKET	1	FR	
	---*---											
-66	65WB06006	.	.	.					PUMP, Hydraulic variable volume (NYB) (43491)	1	FR	
	AN834-4D	.	.	.					TEE	1	FR	
	AN6290-4	.	.	.					GASKET	1	FR	
	AN6291-4	.	.	.					RING	1	FR	
	AN6289-4	.	.	.					NUT	1	FR	
-67	AN6292-8-14-1/2	.	.	.					HOSE ASSEMBLY (Utility System - pressure)	1	FR	
	181-58269-3	.	.	.					TAG, Hydraulic hose assembly identification (utility pressure)	1	FR	
	AN893-16D	.	.	.					BUSHING	1	FR	
	AN6290-12	.	.	.					GASKET	1	FR	
	AN837-8D	.	.	.					ELBOW	1	FR	
	AN6290-8	.	.	.					GASKET	1	FR	
	AN6291-8	.	.	.					RING	1	FR	
	AN6289-8D	.	.	.					NUT	1	FR	
-68	601402-16D0182	.	.	.					HOSE ASSEMBLY (AQ) (00624) (utility system - suction) (supersedes MS28741-16-0174 for future procurement)	1	FR	
	187-58368-5	.	.	.					TAG, Hydraulic hose assembly identification (utility suction)	1	FR	
	AN833-16D	.	.	.					ELBOW	1	FR	
	AN6290-16	.	.	.					GASKET	1	FR	
	AN6291-16	.	.	.					RING	1	FR	
	AN6289-16D	.	.	.					NUT	1	FR	
-69	MS28741-6-0134	.	.	.					HOSE ASSEMBLY (Utility System - case drain)	1	FR	
	187-58368-19	.	.	.					TAG, Hydraulic hose assembly identification (utility case drain)	1	FR	
	AN833-6D	.	.	.					ELBOW	1	FR	
	AN6290-6	.	.	.					GASKET	1	FR	
	AN6291-6	.	.	.					RING	1	FR	
	AN6289-6	.	.	.					NUT	1	FR	
-70	150-S1-8	.	.						COUPLING HALF, Self-sealing (AQ) (00624)	1	FR	
	C155-25-8	.	.						NUT, Union (AQ) (00624)	1	FR	
	AN815-8D	.	.						UNION	1	FR	
	AN939-8D	.	.						ELBOW	1	FR	
	AN6290-8	.	.						GASKET	1	FR	
-71	150-S1-6	.	.						COUPLING HALF, Self-sealing (AQ) (00624)	1	FR	
	C155-25-8	.	.						NUT, Union (AQ) (00624)	1	FR	
	AN815-6D	.	.						UNION	1	FR	
	AN939-6D	.	.						ELBOW	1	FR	
	AN6290-6	.	.						GASKET	1	FR	
-72	150-S1-16	.	.						COUPLING HALF, Self-sealing (AQ) (00624)	1	FR	
	C155-25-16	.	.						NUT, Union (AQ) (00624)	1	FR	
-73	209-47801-19	.							LINE ASSEMBLY, Hydraulic utility pump seal drain to engine drain manifold	1	ET	
-74	209-47002	.							DUCT ASSEMBLY, Engine oil vapor outlet LH side	1		
	194-47006	.	.						FLANGE, Engine oil vapor duct connection	2		
-75	194-43717-101	.							ROD ASSEMBLY, Engine control system aft (see Surface and Secondary Controls)	1		
-76	No Number	.							TRANSMITTER, Fuel flow (GFP) (Navy Stock No. R88T1982-025)	1		
	MS29512-16	.							GASKET	1		
	194-51142	.							SWITCH INSTALLATION, Oil pressure instrument	1		
-77	SW-2A	.	.						SWITCH (UG) (61349) (see Electrical and Instrument)	1	NH	
	AN515-8R8	.	.						SCREW	4	NH	
	AN960D8	.	.						WASHER	4	NH	
	194-51111	.	.						BRACKET, Oil pressure switch assembly of (supersedes 194-51109 for future procurement)	1	NH	
-78	209-510117	.	.						TRANSMITTER ASSEMBLY, Oil pressure	1	ME	
	ST104H	.	.	.					TRANSMITTER (UG) (61349)	1	ME	

ENGINE AND ACCESSORIES ASSEMBLY

FIGURE & INDEX NO.	PART NUMBER	1	2	3	4	5	6	7	NOMENCLATURE	UNITS PER ASSY.	USABLE ON CODE	S/C NO.
355	AN365-832	.	.	.	NUT					4	ME	
	AN515-8R24	.	.	.	SCREW					4	ME	
	AN515-6R10	.	.	.	SCREW					4	ME	
	2W18-6L	.	.	.	WASHER, Flat (NA) (89372)					4	ME	
	2W18-8	.	.	.	WASHER, Flat (NA) (89372)					8	ME	
	2L7-2	.	.	.	LUG, Safety (NA) (89372)					1	ME	
	194-51115	.	.	.	SUPPORT, Oil pressure transmitter assembly of					1	ME	
	194-51115-3	.	.	.	.	SUPPORT SUBASSEMBLY, Oil pressure transmitter				1	ME	
	809-2	.	.	.	.	SHOCKMOUNT (RAI) (51116)				4	ME	
	194-51116	.	.	.	BRACKET, Oil pressure transmitter mounting					1	ME	
-79	AN833-4	.	.	ELBOW						1		
	AN6290-4	.	.	GASKET						1		
	AN924-4	.	.	NUT						1		
-80	AN837-4	.	.	ELBOW						1		
	AN6290-4	.	.	GASKET						1		
	AN924-4	.	.	NUT						1		
-81	MS28741-4-0184	.	.	HOSE ASSEMBLY (oil pressure - pump to switch)						1		
	194-51110	.	.	CLIP, Oil pressure flexible hose assembly						1		
	TA716-D8	.	.	CLAMP (THAS) (84971)						1		
	AN515-8R8	.	.	SCREW						1		
	AN960D8	.	.	WASHER						1		
	AN365-832	.	.	NUT						1		
-82	194-42015	.	COVER ASSEMBLY, Engine access starter-generator							1		
	194-42015-3	.	.	RIVET ASSEMBLY, Engine access starter-generator cover						1		
	194-42015-5	.	.	.	WELD ASSEMBLY, Engine access starter-generator cover					1		
	194-42017	.	.	.	INLET, Engine starter generator cooling air duct					1		
-83	194-42016	.	.	.	DUCT ASSEMBLY, Engine starter-generator					1		
-84	AN520-10R8	.	.	SCREW (bottom screw head facing forward)						3		
	2W18-10	.	.	WASHER, Flat (NA) (89372)						6		
	AN365-1032	.	.	NUT						1		
-85	AN737RM114	.	.	CLAMP						1		
-86	151-42019	.	.	SEAL, Generator air duct						1		
-87	194-42015-17	.	.	PIN, Engine access starter-generator cover assembly						4		
-88	2W1-17-16-32	.	.	WASHER, Plain (NA) (89372)						4		
-89	151-42013	.	.	SPACER ASSEMBLY, Engine accessory cover retainer						4		
-90	194-42021	.	.	SPRING ASSEMBLY, Engine accessory cover retainer						4		
-91	151-42006	.	.	BOLT, Engine accessory cover retainer						4		
-92	194-42020	.	.	WASHER, Engine starter-generator accessory cover retaining bolt						4		
-93	209-54049	.	CLAMP ASSEMBLY, Generator lead electrical (supersedes 209-54049-11 for future procurement)							1	LE	
	AN3-11A	.	.	BOLT						2	LE	
	AN3-12A	.	.	BOLT						1	LE	
	AN365-1032	.	.	NUT						3	LE	
	2W18-10M	.	.	WASHER, Flat (NA) (89372)						5	LE	
	209-54050-1	.	.	FAIRLEAD, Generator lead electrical						1	LE	
	209-54050-3	.	.	FAIRLEAD, Generator lead electrical						1	LE	
	320-63-750-SH	.	.	CLAMP (MAR) (98625)						1	LE	
-94	209-54049-11	.	CLAMP ASSEMBLY, Generator lead electrical (supersedes 209-54049 for future procurement)							1	KY	
	AN3-15A	.	.	BOLT						2	KY	
	AN3-16A	.	.	BOLT						1	KY	
	NAS43DD3-24	.	.	SPACER						1	KY	
	AN365-1032	.	.	NUT						3	KY	
	2W18-10M	.	.	WASHER, Flat (NA) (89372)						5	KY	
	209-54050-5	.	.	CLIP, Generator lead electrical clamp assembly						2	KY	
	209-54050-11	.	.	FAIRLEAD ASSEMBLY, Generator lead electrical						1	KY	
	209-54050-5	.	.	.	FAIRLEAD SUBASSEMBLY, Generator lead electrical					1	KY	
	209-54050-7	.	.	.	FAIRLEAD SUBASSEMBLY, Generator lead electrical					1	KY	
	320-63-750-SH	.	.	CLAMP (MAR) (98625)						1	KY	
-95	209-54063	.	CLAMP ASSEMBLY, Generator cable "B" electrical							1		
-96	11242	.	TERMINAL BLOCK (AITR) (80006)							1		
	194-54067	.	GASKET, Electrical terminal block							1		
	AN364-1032	.	NUT							4		
	2W18-10L	.	WASHER, Flat (NA) (89372)							4		
-97	11241	.	TERMINAL BLOCK (AITR) (80006)							1		
	194-54067	.	GASKET, Electrical terminal block							1		
	AN364-1032	.	NUT							4		
	2W1AL14-14-64	.	WASHER, Plain (NA) (89372)							4		
-98	11243	.	TERMINAL BLOCK (AITR) (80006)							1		
	194-54067	.	GASKET, Electrical terminal block							1		
	AN364-1032	.	NUT							4		
	2W1AL14-14-64	.	WASHER, Plain (NA) (89372)							4		
-99	30E13-6C	.	STARTER-GENERATOR (GFP) (supersedes 30E13-6B (see Technical Manual NAVAER 03-5AA-550 for breakdown) for future procurement)							1	KC	
-100	30E13-6D	.	STARTER-GENERATOR (GFP) (supersedes 30E13-6C for future procurement)							1	QP	
-101	30E13-6Q-F	.	STARTER-GENERATOR (GFP) (supersedes 30E13-6D for future procurement)							1	QQ	
-102	AT-719	.	LINE (AMK) (70510) (engine combustion chamber fuel drain line)							1		
-103	AN363-1032	.	NUT							2		
-104	AN520-1032	.	SCREW							2		
-105	194-42012	.	CLAMP, Engine combustion chamber fuel drain line							1		
-106	194-42043	.	SUPPORT, Engine combustion chamber fuel drain line							1		
-107	209-42019	.	CLIP, Engine combustion chamber fuel drain line							2	AP	

ENGINE AND ACCESSORIES ASSEMBLY

FIGURE & INDEX NO.	PART NUMBER	1	2	3	4	5	6	7	NOMENCLATURE	UNITS PER ASSY.	USABLE ON CODE	S/C NO.
355-108	209-42019	.							CLIP, Engine combustion chamber fuel drain line	1	AQ	
-109	209-42023	.							CLIP, Combustion chamber fuel drain line	1	AQ	
-110	209-42021	.							CABLE ASSEMBLY, Engine combustion chamber drain line	1	AP	
-111	209-42024	.							CABLE ASSEMBLY, Engine combustion chamber drain hose support	1	AQ	
-112	AN363-1032	.							NUT	1		
-113	AN520-10R8	.							SCREW	1		
-114	AN742-14	.							CLAMP	1		
-115	AN365-1032	.							NUT	32		
-116	2W18-10M	.							WASHER, Flat (NA) (89372)	32		
-117	AN520-10R8	.							SCREW	32		
-118	194-42036	.							RETAINER, Engine firewall bulb seal	3		
-119	209-42037	.							RETAINER, Engine firewall bulb seal lower	1		
-120	209-42038	.							ADAPTER, Engine firewall bulb seal lower	1		
-121	209-42039	.							SEAL ASSEMBLY, Engine firewall bulb	1		
	209-42039-3	.		.					TAPE, Engine firewall bulb seal assembly	1		
	209-42039-5	.		.					GLASS TAPE, Engine firewall bulb seal assembly	1		
-122	MS28741-12-0350	.							HOSE ASSEMBLY (engine oil tank to tee)	1		
-123	AN783D12	.							TEE	1		
	AN837-8D	.							ELBOW	1		
	AN924-8D	.							NUT	1		
-124	MS28741-8-0210	.							HOSE ASSEMBLY (from tee - oil tank complete drain)	1		
	AN6290-12	.							GASKET	1		
	AN893-16D	.							BUSHING	1		
-125	AN929-8	.							CAP (oil tank complete drain valve)	1		
-126	MS28741-12-0120	.							HOSE ASSEMBLY (from tee to oil pressure pump)	1		
-127	209-42015	.							ELBOW, Engine accessory oil pressure pump	1		
-128	10-83040-1	.							LEAD (SNT) (77820)	1		
-129	209-42026	.							HOSE ASSEMBLY, Engine drain manifold overboard	1		
	209-42029	.							MANIFOLD ASSEMBLY, Engine drain	1		
-130	AN365-1032	.		.					NUT	2		
-131	2W18-10	.		.					WASHER, Flat (NA) (89372)	4		
-132	NAS221-10	.		.					SCREW	2		
-133	209-42028	.		.					BRACKET, Engine drain manifold support	1		
-134	AN833-6D	.		.					ELBOW	1		
-135	AN924-6D	.		.					NUT	1		
-136	AN6290-6	.		.					GASKET	1		
-137	AN815-4	.		.					UNION	1		
-138	AN6290-4	.		.					GASKET	1		
-139	AN804-4	.		.					TEE	1		
-140	AN924-4	.		.					NUT	1		
-141	AN6290-4	.		.					GASKET	1		
-142	AN833-8D	.		.					ELBOW	1		
-143	AN6290-8	.		.					GASKET	1		
-144	AN924-8D	.		.					NUT	1		
-145	209-42027	.		.					MANIFOLD, Engine drain	1		
-146	MS28741-6-0130	.							HOSE ASSEMBLY, (oil drain accessory gear box)	1		
-147	209-47024	.							FITTING, Oil drain accessory gear box safety (supersedes 209-42022 for future procurement)	1		
-148	209-42044	.							LINE ASSEMBLY, Accessories overboard fluid drain	1		
-149	209-42047	.							MANIFOLD ASSEMBLY, Engine compressor air extraction upper LH side (see Heat and Vent)	1		
-150	AN310-10	.							NUT	1		
-151	2W18-1016M	.							WASHER, Flat (NA) (89372)	2		
-152	NAS43DD10-8	.							SPACER	2		
-153	2W18-1016	.							WASHER, Flat (NA) (89372)	2		
-154	AN180-37	.							BOLT	1		
	194-42030-11	.							SUPPORT ASSEMBLY, Engine forward	1		
-155	194-42029-5	.		.					LINK ASSEMBLY, Engine forward support	1		
-156	HSBG-10	.		.		.			BEARING (HLF) (97613)	1		
-157	AN316-8	.		.					NUT	1		
-158	176-31932-3	.		.					PIN, Engine forward support link	1		
-159	194-42048	.		.					FITTING, Engine forward support link	1		
-160	176-31931-11	.		.					LINK ASSEMBLY, Engine forward support upper	1		
-161	NAS51-62	.		.		.			RING	2		
-162	151-42035	.		.		.			ROLLER, Engine upper forward steady support	2		
-163	151-42048	.		.		.			BUSHING, Engine upper forward steady support	2		
-164	10-89035-1	.							LEAD (SNT) (77820)	1		
-165	194-42062	.							CLIP, Lead assembly to block terminal J65-W-4 engine	1		
	MS21919DG5	.							CLAMP	1		
	AN520-10R8	.							SCREW	1		
	2W18-10M	.							WASHER, Flat (NA) (89372)	1		
	AN365-1032	.							NUT	1		
-166	194-42064	.							CLIP, Lead assembly to block terminal J65-W-4 engine aft	3		
	MS21919DG5	.							CLAMP	3		
	AN520-10R8	.							SCREW	3		
	2W18-10M	.							WASHER, Flat (NA) (89372)	3		
	AN365-1032	.							NUT	3		
-167	194-42069	.							CHANNEL ASSEMBLY, Engine starter generator (supersedes 194-42018 for future procurement)	1		
	ATTACHING PARTS											
	AN4-4A	.							BOLT	12		
	2W18-416M	.							WASHER, Flat (NA) (89372)	12		

---*---

ENGINE AND ACCESSORIES ASSEMBLY

FIGURE & INDEX NO.	PART NUMBER	1	2	3	4	5	6	7	NOMENCLATURE	UNITS PER ASSY.	USABLE ON CODE	S/C NO.
355	AN365-428	.	.						NUT	8		
	AN960D416L	.	.						WASHER	8		
	AN509-416R13	.	.						SCREW	8		
	194-42067	.	.						SUPPORT, Engine starter generator accessory cover attaching	4		
	194-42069-21	.	.						CHANNEL SUBASSEMBLY, Engine starter generator	1		
-168	5B25-616H10A	.							BOLT, Corrosion-resistant steel (NA) (89372)	8		
-169	2W1-25-20-63	.							WASHER, Plain (NA) (89372)	10		
-170	2W1-25-20-16	.							WASHER, Plain (NA) (89372)	2		
-171	5B25-616H12A	.							BOLT, Corrosion-resistant steel (NA) (89372)	2		
-172	5B25-616H11A	.							BOLT, Corrosion-resistant steel (NA) (89372)	2		
-173	194-42027-2	.							FITTING, Engine installation and removal attachment RH	1		
	194-42027-1	.							FITTING, Engine installation and removal attachment LH	1		
-174	194-42053-4	.							SHROUD, Engine center main bearing forward	1		
-175	194-42026	.							FITTING ASSEMBLY, Engine main trunnion RH side	1		
-176	194-42025-5	.		.					FITTING, Engine main trunnion	1		
-177	2W1C33-34-32	.		.					WASHER, Plain (NA) (89372)	1		
-178	179-42011	.		.					BEARING	1		
-179	151-42082	.		.					KEY, Engine RH main trunnion	1		
-180	194-42025-3	.							FITTING, Main trunnion LH side	1		
-181	194-42053-3	.							SHROUD, Engine center main bearing forward	1		
-182	194-42053-34	.							SHROUD, Engine center main bearing forward	1		
-183	194-42053-33	.							SHROUD, Engine center main bearing forward	1		
-184	194-42053-31	.							SHROUD, Engine center main bearing forward	1		
-185	194-42053-36	.							SHROUD, Engine center main bearing forward	1		
-186	194-42054	.							CLIP, Engine shroud assembly retainer	4		
	AN520-10R8	.							SCREW	4		
	AN365-1032	.							NUT	4		
	194-47010	.							FILLER INSTALLATION, Engine oil tank	1	SW	418, 418A
	194-47030	.		.					FILLER ASSEMBLY, Engine oil tank (remove existing bolts and washers (8 places) install 194-47030 and replace bolts and washers)	1	SW	418, 418A
-187	2W1-13-14-32	.		.	.				WASHER, Plain (NA) (89372)	1	SW	418, 418A
-188	AN393-29	.		.	.				PIN	1	SW	418, 418A
-189	194-47027	.		.	.				INDICATOR ASSEMBLY, Engine oil tank filler cap arm	1	SW	418, 418A
	194-47025	.		.	.				. STOP, Indicator arm engine oil tank	1	SW	418, 418A
-190	194-47424	.		.	.				SPRING, Engine oil tank filler cap lock indicator (supersedes 146-47424 for future procurement)	1	SW	418, 418A
-191	194-47026	.		.	.				BRACKET, Engine oil tank filler cap indicator support	1	SW	418, 418A
	ATTACHING PARTS											
	AN520-10R7	.		.	.				SCREW	2	SW	418, 418A
	AN365-1032	.		.	.				NUT	2	SW	418, 418A
	---*---											
-192	194-47024	.		.	.				CAP, Engine oil tank filler	1	SW	418, 418A
	5R10	.		.	.				RING, Chain retainer (NA) (89372)	1	SW	418, 418A
-193	194-47029	.		.	.				FILLER ASSEMBLY, Engine oil tank	1	SW	418, 418A
	194-47029-13	.		.	.				. SCREEN, Engine oil tank filler assembly	1	SW	418, 418A
-194	FC3532	.		.	.				. FILLER NECK (SLP) (78567)	1	SW	418, 418A
	9C1-2-5	.		.	.				. CHAIN, Safety (NA) (89372)	1	SW	418, 418A
	AN416-2	.		.	.				. PIN	1	SW	418, 418A
-195	AN815-6	.		.	.				UNION	1	SW	418, 418A
-196	AN6290-6	.		.	.				GASKET	1	SW	418, 418A
-197	194-47028	.		.					GASKET, Engine oil tank (install between 194-47030 and island on oil tank)	1	SW	418, 418A
-198	AN365-428	.		.					NUT	4	SW	418, 418A
-199	2W1-17-16-32	.		.					WASHER, Plain (NA) (89372)	4	SW	418, 418A
-200	194-47031	.		.					COVER PLATE, Engine oil tank lower island	1	SW	418, 418A
-201	194-47016	.		.					GASKET, Engine oil tank filler	1	SW	418, 418A
-202	MS28741-4-0140	.		.					HOSE ASSEMBLY (oil tank sump drain to disconnect)	1	SW	418, 418A
-203	MS28741-6-0414	.		.					HOSE ASSEMBLY (scupper drain to engine drain manifold	1	SW	418, 418A
	209-47006	.							FILLER INSTALLATION, Engine oil tank	1	SX	
	194-47043	.		.					FILLER ASSEMBLY, Engine oil tank	1	SX	
	194-47037	.		.	.				INDICATOR ASSEMBLY, Engine oil tank	1	SX	
	ATTACHING PARTS											
-204	2W1C12-14-25	.		.	.				WASHER, Plain (NA) (89372)	1	SX	
-205	AN393-29	.		.	.				PIN	1	SX	
-206	194-47424	.		.	.				SPRING, Engine oil tank filler cap lock indicator (supersedes 146-47424 for future procurement)	1	SX	
	---*---											
-207	AN365-1032	.		.	.	.			NUT	1	SX	
-208	2W17-10M	.		.	.	.			WASHER, Corrosion-resistant steel (NA) (89372)	2	SX	
-209	NAS221-16	.		.	.	.			SCREW	1	SX	
-210	209-47022	.		.	.	.			COLLAR, Oil tank indicator arm lock	1	SX	
-211	194-47036	.		.	.	.			LOCK, Indicator arm filler oil tank	1	SX	
-212	AN502-10-8	.		.	.	.			SCREW	1	SX	
-213	194-47047	.		.	.	.			SPRING, Engine oil tank indicator	1	SX	
-214	194-47042	.		.	.	.			INDICATOR, Engine oil tank filler cap arm	1	SX	
-215	5R10	.		.	.				RING, Chain retainer (NA) (89372)	1	SX	
-216	194-47040	.		.	.				CAP ASSEMBLY, Engine oil tank filler	1	SX	
	194-47038	.		.	.				FILLER ASSEMBLY, Engine oil tank	1	SX	
-217	194-47038-9	.		.	.	.			SCREEN, Engine oil tank filler assembly	1	SX	
-218	194-47038-7	.		.	.	.			SCREEN, Engine oil tank filler assembly	1	SX	
-219	FC3532	.		.	.	.			FILLER NECK (SLP) (78567)	1	SX	
-220	9C1-2-12	.		.	.	.			CHAIN, Safety (NA) (89372)	1	SX	

ENGINE AND ACCESSORIES ASSEMBLY

FIGURE & INDEX NO.	PART NUMBER	1	2	3	4	5	6	7	NOMENCLATURE	UNITS PER ASSY.	USABLE ON CODE	S/C NO.
355	2W1C6-12-32	.	.	.	.				WASHER, Plain (NA) (89372)	1	SX	
	2W18-2	.	.	.	.				WASHER, Flat (NA) (89372)	1	SX	
-221	194-47038-11	.	.	.	.				FITTING, Engine oil tank filler assembly	1	SX	
-222	AN6290-4	.	.						GASKET (install between 194-47038-11 and 194-47046)	1	SX	
-223	194-47039	.	.						GASKET, Engine oil tank filler (install between 194-47043 and island on oil tank)	1	SX	
-224	194-47046	.	.						TUBE ATTACHMENT ASSEMBLY, Engine oil tank	1	SX	
	AN818-6C	.	.	.					NUT	1	SX	
	AN819-6C	.	.	.					SLEEVE	1	SX	
	194-47046-3	.	.	.					TUBE, Engine oil tank tube attachment assembly (corrosion resistant steel tubing 3/8 OD x .049x11-1/4)	1	SX	
	194-47046-5	.	.	.					FITTING, Engine oil tank tube attachment assembly (corrosion-resistant bar 5/8 diameter x 1)	1	SX	
-225	MS21919DF5	.	.						CLAMP	1	SX	
	AN520-10R12	.	.						SCREW	1	SX	
	2W18-10L	.	.						WASHER, Flat (NA) (89372)	2	SX	
	AN365-1032	.	.						NUT	1	SX	
-226	AN815-6	.	.						UNION	1	SX	
-227	MS28741-6-0300	.	.						HOSE ASSEMBLY (scupper drain to engine drain manifold)	1	SX	
-228	MS21919DF12	.	.						CLAMP	1	SX	
	MS21919H14	.	.						CLAMP	1	SX	
	AN520-10R14	.	.						SCREW	1	SX	
	2W18-10L	.	.						WASHER, Flat (NA) (89372)	2	SX	
	AN365-1032	.	.						NUT	1	SX	
	NAS43DD3-16	.	.						SPACER	1	SX	
-229	MS28741-4-0240	.	.						HOSE ASSEMBLY (oil tank sump drain to disconnect)	1	SX	
-230	MS21919H14	.	.						CLAMP	1	SX	
	MS21919DF8	.	.						CLAMP	1	SX	
	AN520-10R16	.	.						SCREW	1	SX	
	2W18-10L	.	.						WASHER, Flat (NA) (89372)	2	SX	
	NAS43DD3-32	.	.						SPACER	1	SX	
	AN365-1032	.	.						NUT	1	SX	
	MS21919DF8	.	.						CLAMP	1	SX	
	MS21919DF12	.	.						CLAMP	1	SX	
	AN520-10R10	.	.						SCREW	1	SX	
	2W18-10L	.	.						WASHER, Flat (NA) (89372)	2	SX	
	AN365-1032	.	.						NUT	1	SX	
-231	209-42030	.							BRACKET, Line support	1		
	AN924-4D	.							NUT	1		
	2W18-716	.							WASHER, Flat (NA) (89372)	2		
	230-20370	.							VALVE (WH) (79470)	1		
-232	209-47801-27	.							LINE ASSEMBLY, Engine oil tank sump drain discharge to hydraulic utility pump seal drain	1		
-233	209-48307	.							HOSE ASSEMBLY, Fuel filter to engine	1		
	TA724S24AF	.							CLAMP (THAS) (84971)	1		
	MS21919DG24	.							CLAMP	1		
	AN724D16C	.							CLAMP	1		
	AN520-10R8	.							SCREW	1		
	AN365-1032	.							NUT	1		
-234	AN5544-3	.							GENERATOR, Tachometer 2-pole (GFP)	1		
	AN4045-1	.							GASKET	1		
-235	TG77200-4								PUMP ASSEMBLY, Fuel (TP) (59875) (interchangeable with 022664-021-02 (PE) (77200)	1		
	022664-021-02								PUMP ASSEMBLY, Fuel (PE) (77200) (interchangeable with TG77200-4 (TP) (59875)	1		
	ATTACHING PARTS											
	6087D4								NUT (Wright Aeronautical Corp) (66640)	4		
	AN122584								WASHER	4		
	AN4044-1								GASKET	1		

---*---

NOTE: * Q. E. C. A.
*1 Parts marked thus are interchangeable
*2 Parts marked thus are interchangeable
*3 Parts marked thus are interchangeable
*4 Parts marked thus are interchangeable
*5 Parts marked thus are interchangeable
*6 Parts marked thus are interchangeable
*7 Parts marked thus are interchangeable
*8 Parts marked thus are interchangeable

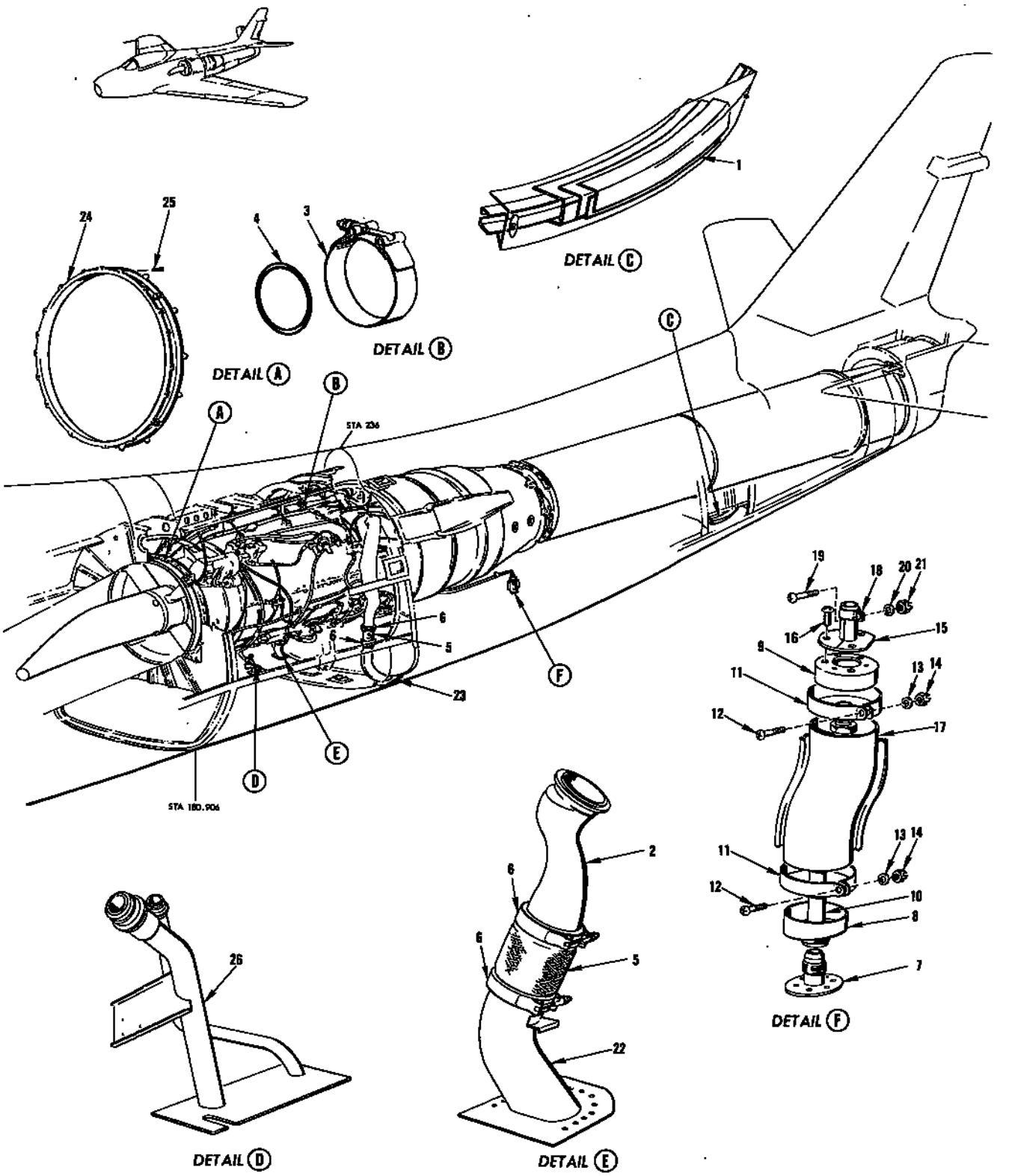

FIGURE 356 - ENGINE EQUIPMENT

SPARE OUTBOARD WING, INBOARD WING AND INBOARD WING ROOT LEADING EDGE ASSEMBLIES

FIGURE & INDEX NO.	PART NUMBER	1 2 3 4 5 6 7	NOMENCLATURE	UNITS PER ASSY.	USABLE ON CODE	S/C NO.
357	209-14234-4	.	LATCH PLATE, Leading edge ammo bay clearance door outer RH	1	DN	
	209-17045-31	.	PIN ASSEMBLY, Droop nose leading edge LH	1	DN	
	209-17045-32	.	PIN ASSEMBLY, Droop nose leading edge RH	1	DN	
	209-17045-61	.	PIN ASSEMBLY, Droop nose leading edge LH	1	DN	
	209-17045-62	.	PIN ASSEMBLY, Droop nose leading edge RH	1	DN	
	209-17048-3	.	HINGE, Leading edge inner panel fixed LH	1	DN	
	209-17048-4	.	HINGE, Leading edge inner panel fixed RH	1	DN	
	209-17059-1	.	STOP, Wing station 47.160 barrier strap LH	1	DN	
	209-17059-2	.	STOP, Wing station 47.160 barrier strap RH	1	DN	
	209-54060	.	CLIP ASSEMBLY, Wire routing support inboard wing electric	2	DN	
	EB-054	.	NUT (EN) (72962)	1	DN	
	2W1-12-10-032	.	WASHER, Plain (NA) (89372)	5	DN	
	2W17-10	.	WASHER, Corrosion-resistant (NA) (89372)	2	DN	
	2W18-4	.	WASHER, Flat (NA) (89372)	2	DN	
	2W18-416M	.	WASHER, Flat (NA) (89372)	1	DN	
	2W18-516	.	WASHER, Flat (NA) (89372)	1	DN	
	2W18-6	.	WASHER, Flat (NA) (89372)	4	DN	
	2W18-6L	.	WASHER, Flat (NA) (89372)	1	DN	
	2W18-8	.	WASHER, Flat (NA) (89372)	7	DN	
	5P48	.	PLATE, Navy identification and modification (NA) (89372)	1	DN	
	AN365-632	.	NUT	3	DN	
	AN365-832	.	NUT	4	DN	
	AN365-1032	.	NUT	2	DN	
	AN393-81	.	PIN	1	DN	
	AN507-632-8	.	SCREW	2	DN	
	AN507-632-10	.	SCREW	1	DN	
	AN509-8-9	.	SCREW	1	DN	
	AN509-8-14	.	SCREW	1	DN	
	AN509-10-13	.	SCREW	2	DN	
	AN509-10-16	.	SCREW	3	DN	
	AN509-8-10	.	SCREW	2	DN	
	AN719-1-4	.	JUMPER	1	DN	
	NAS334CPA7-5	.	BOLT	1	DN	
	NAS334CPA6-5	.	BOLT	13	DN	
	NAS334CPA10	.	BOLT	1	DN	
	NAS335CPA7	.	BOLT	1	DN	
	NAS335CPA10	.	BOLT	1	DN	
	NAS43-3-26	.	SPACER	1	DN	
	NA2647-048	.	NUT, Anchor (EN) (72962)	2	DN	
	NA2648-048	.	NUT, Anchor (EN) (72962)	15	DN	
	NA2648-054	.	NUT, Anchor (EN) (72962)	1	DN	
	209-14034-1	.	RIB, Fixed leading edge close-out LH	1		
	209-14034-2	.	RIB, Fixed leading edge close-out RH	1		
	209-14037-1	.	SKIN, Inboard wing inboard access leading edge LH	1		
	209-14037-2	.	SKIN, Inboard wing inboard access leading edge RH	1		
	209-14038-9	.	CLIP, Leading edge inboard wing assembly LH	1		
	209-14038-10	.	CLIP, Leading edge inboard wing assembly RH	1		
	209-14038-21	.	LEADING EDGE SUBASSEMBLY, Inboard wing assembly LH	1		
	209-14038-22	.	LEADING EDGE SUBASSEMBLY, Inboard wing assembly RH	1		
	209-14038-31	.	LEADING EDGE SUBASSEMBLY, Inboard wing assembly LH	1		
	209-14038-32	.	LEADING EDGE SUBASSEMBLY, Inboard wing assembly RH	1		
	209-14228-1	.	RIB, Leading edge inboard wing root close-out LH	1		
	209-14228-2	.	RIB, Leading edge inboard wing root close-out RH	1		
	209-17045-61	.	PIN ASSEMBLY, Droop nose leading edge	1		
	209-17048-3	.	HINGE, Leading edge inner panel fixed LH	1		
	209-17048-4	.	HINGE, Leading edge inner panel fixed RH	1		
	209-17059-1	.	STOP, Wing station 47.160 barrier strap LH	1		
	209-17059-2	.	STOP, Wing station 47.160 barrier strap RH	1		
	209-54060	.	CLIP ASSEMBLY, Wire routing support inboard wing electrical	2		
	G1000-428-10-3	.	SHIM (KNM) (75237)	1		
	G1000-428-10-4	.	SHIM (KNM) (75237)	2		
	EB-054	.	NUT (EN) (72962)	1		
	2W18-4	.	WASHER, Flat (NA) (89372)	2		
	2W18-10	.	WASHER, Flat (NA) (89372)	4		
	2W18-416M	.	WASHER, Flat (NA) (89372)	1		
	2W18-516	.	WASHER, Flat (NA) (89372)	1		
	5P48	.	PLATE, Navy identification and modification (NA) (89372)	1		
	AN364-1032	.	NUT	4		
	AN509-10R12	.	SCREW	4		
	NAS334CPA7-5	.	BOLT	1		
	NAS334CPA10	.	BOLT	1		
	NAS335CPA7	.	BOLT	1		
	NAS335CPA10	.	BOLT	1		
	NA2647-048	.	NUT, Anchor (EN) (72962)	2		
	NA2648-048	.	NUT, Anchor (EN) (72962)	1		
	NA2648-054	.	NUT, Anchor (EN) (72962)	1		
-2	209-14901-1		WING ASSEMBLY, Inboard LH	1	A	*1
	209-14901-101		WING ASSEMBLY, Inboard LH	1	CB	*1
	209-14901-201		WING ASSEMBLY, Inboard LH	1	ES	*1
	209-14901-301		WING ASSEMBLY, Inboard LH	1	FR	*1
	209-14901-2		WING ASSEMBLY, Inboard RH	1	A	*1
	209-14901-102		WING ASSEMBLY, Inboard RH	1	CB	*1
	209-14901-202		WING ASSEMBLY, Inboard RH	1	ES	*1

SPARE OUTBOARD WING, INBOARD WING AND INBOARD WING ROOT LEADING EDGE ASSEMBLIES

FIGURE & INDEX NO.	PART NUMBER	1 2 3 4 5 6 7 NOMENCLATURE	UNITS PER ASSY.	USABLE ON CODE	S/C NO.
357	209-14901-302	WING ASSEMBLY, Inboard RH	1	FR	*1
	209-14002-1	. STRUCTURE ASSEMBLY, Inboard wing LH	1	A	
	209-14002-101	. STRUCTURE ASSEMBLY, Inboard wing LH	1	CB	
	209-14002-201	. STRUCTURE ASSEMBLY, Inboard wing LH	1	ES	
	209-14002-301	. STRUCTURE ASSEMBLY, Inboard wing LH	1	FR	
	209-14002-2	. STRUCTURE ASSEMBLY, Inboard wing RH	1	A	
	209-14002-102	. STRUCTURE ASSEMBLY, Inboard wing RH	1	CB	
	209-14002-202	. STRUCTURE ASSEMBLY, Inboard wing RH	1	ES	
	209-14002-302	. STRUCTURE ASSEMBLY, Inboard wing RH	1	FR	
	209-330141-1	. DOOR INSTALLATION, Main landing gear strut LH	1	AW	
	209-330141-2	. DOOR INSTALLATION, Main landing gear strut RH	1	AW	
	209-48014-1	. FUEL SYSTEM INSTALLATION, Inboard wing complete LH	1	A	
	209-48014-2	. FUEL SYSTEM INSTALLATION, Inboard wing complete RH	1	A	
	209-51014-1	. EQUIPMENT INSTALLATION, Instrument inboard LH	1		
	209-51014-2	. EQUIPMENT INSTALLATION, Instrument inboard RH	1		
	209-52014-1	. SURFACE CONTROLS INSTALLATION, Inboard wing LH	1		
	209-52014-2	. SURFACE CONTROLS INSTALLATION, Inboard wing RH	1		
	209-52326-11	. MECHANISM INSTALLATION, Aileron control surface operating LH	1		
	209-52326-12	. MECHANISM INSTALLATION, Aileron control surface operating RH	1		
	209-54013-1	. EQUIPMENT INSTALLATION, Electrical inboard wing LH	1	ET	
	209-54013-2	. EQUIPMENT INSTALLATION, Electrical inboard wing RH	1	ET	
	209-58014-1	. HYDRAULIC EQUIPMENT INSTALLATION, Wing inboard panel rear spar station 128 to wingfold LH	1		
	209-58014-2	. HYDRAULIC EQUIPMENT INSTALLATION, Wing inboard panel rear spar station 128 to wingfold RH	1		
	209-52652-1	. EQUIPMENT INSTALLATION, Inboard wing droop leading edge LH	1		
	209-52652-2	. EQUIPMENT INSTALLATION, Inboard wing droop leading edge RH	1		
	209-58018-1	. HYDRAULIC EQUIPMENT INSTALLATION, Wing rear spar LH	1		
	209-58018-2	. HYDRAULIC EQUIPMENT INSTALLATION, Wing rear spar RH	1		
	209-48024-1	. FUEL SYSTEM INSTALLATION, Inboard wing complete LH	1	HD	
	209-48024-2	. FUEL SYSTEM INSTALLATION, Inboard wing complete RH	1	HD	
	209-330142-1	. DOOR INSTALLATION, Main landing gear strut LH	1	BY	
	209-330142-2	. DOOR INSTALLATION, Main landing gear strut RH	1	BY	
	209-48044-1	. FUEL SYSTEM INSTALLATION, Inboard wing complete LH	1	FR	
	209-48044-2	. FUEL SYSTEM INSTALLATION, Inboard wing complete RH	1	FR	
	209-540101-1	. ELECTRICAL EQUIPMENT INSTALLATION, Inboard wing LH	1	FR	
	209-540101-2	. ELECTRICAL EQUIPMENT INSTALLATION, Inboard wing RH	1	FR	
	209-17030	. FITTING, Leading edge support aft 0% station 194.125	1		
	209-17036-11	. FITTING ASSEMBLY, Leading edge stop 0% station 146.875 LH	1		
	209-17036-12	. FITTING ASSEMBLY, Leading edge stop 0% station 146.875 RH	1		
	209-17037-1	. FITTING ASSEMBLY, Leading edge stop inner panel outer LH	6		
	209-17037-2	. FITTING ASSEMBLY, Leading edge stop inner panel outer RH	4		
	209-17043	. FITTING, Leading edge actuator support aft 0% station 164.875	1		
	209-58146	. PIN, Hydraulic wingfold actuating swivel cylinder	1	BY	
	209-58173	. WASHER, Hydraulic wingfold actuating cylinder	1	BY	
	209-58818-7	. LINE ASSEMBLY, No. 2 flight control aileron pressure union at BL 20 LH to tee at BL 20 RH (included with 209-14901-201 only)	1	ES	
	209-58818-9	. LINE ASSEMBLY, No. 2 flight control aileron return union at BL 20 LH to tee at BL 20 RH (included with 209-14901-201 only)	1	ES	
	209-58818-63	. LINE ASSEMBLY, Wingfold tee at BL 20 RH to union at BL 20 LH (included with 209-14901-201 & -301 only)	1	BY	
	209-58818-65	. LINE ASSEMBLY, Wingspread tee at BL 20 RH to union at BL 20 LH (included with 209-14901-201 & -301 only)	1	BY	
	209-58818-67	. LINE ASSEMBLY, Wingfold union in 209-142090 angle to tee at BL 20 RH (included with 209-14901-201 & -302 only)	1	BY	
	209-58818-69	. LINE ASSEMBLY, Wingspread union in 209-142090 angle to tee at BL 20 RH (included with 209-14901-201 & -301 only)	1	BY	
	209-58818-87	. LINE ASSEMBLY, No. 2 flight control return union at BL 20 LH to tee at BL 20 RH (included with 209-14901-301 only)	1	FR	
	209-58818-89	. LINE ASSEMBLY, No. 2 flight control return union at BL 20 LH to tee at BL 20 RH (included with 209-14901-301 only)	1	FR	
	EB-048	. NUT (EN) (72962)	18		
	HS15-8	. COLLAR (HIS) (73197)	5		
	HS52P8-8	. PIN (HIS) (73197)	5		
	HT4M-8	. BOLT (HIS) (73197)	6		
	HT4M-10	. BOLT (HIS) (73197)	12		
	2W18-416	. WASHER, Flat (NA) (89372)	18		
	MS21908D4	. ELBOW	2	ES	
	MS21904D4	. ELBOW	2	FR	
	57J100	. SWIVEL ASSEMBLY (MKL) (76530)	2	BY	
	2W18-916M	. WASHER, Flat (NA) (89372)	1	BY	
	2W18-416M	. WASHER, Flat (NA) (89372)	4	BY	
	AN179-33	. BOLT	1	BY	
	AN4-21A	. BOLT	2	BY	
	AN363-918	. NUT	1	BY	
	AN365-428	. NUT	2	BY	
	AN6227-10	. GASKET	2	BY	
	AN6289-4	. NUT	2	BY	
	AN6291-4	. RING	2	BY	
	AN6290-4	. GASKET	2	BY	
	2W18-4L	. WASHER, Flat (NA) (89372) (included with 209-14901-201 only)	2	ES	
	MS21919WDG4	. CLAMP (included with 209-14901-201 only)	1		
	295202-6B	. GROMMET (Altair, Inc.) (00672)	1	ES	

SPARE OUTBOARD WING, INBOARD WING AND INBOARD WING ROOT LEADING EDGE ASSEMBLIES

FIGURE & INDEX NO.	PART NUMBER	1	2	3	4	5	6	7	NOMENCLATURE	UNITS PER ASSY.	USABLE ON CODE	S/C NO.
357	AN365-1032	.							NUT	26		
	AN509-8-6	.							SCREW (RH only)	2	DE	
	AN509-8-13	.							SCREW	1	AW	
	AN509-10R5	.							SCREW (RH only)	4		
	AN509-10R6	.							SCREW	2		
	AN509-10R7	.							SCREW (LH only)	40		
	AN509-10R7	.							SCREW (RH only)	72		
	AN509-10R8	.							SCREW (LH only)	27	ET	
	AN509-10R8	.							SCREW (LH only)	23	FR	
	AN509-10R8	.							SCREW (RH only)	138	ET	
	AN509-10R8	.							SCREW (RH only)	139	FR	
	AN509-10R14	.							SCREW	8		
	AN509-10R11	.							SCREW	15		
	AN509-10R12	.							SCREW	8		
	AN509-10R13	.							SCREW (LH only)	11		
	AN509-10R13	.							SCREW (RH only)	15		
	AN509-10R17	.							SCREW	4		
	AN509-10R19	.							SCREW	2		
	AN509-10R22	.							SCREW	1		
	AN520-10R8	.							SCREW (RH only)	2	Z	
	AN520-10R8	.							SCREW (LH only)	1	Y	
	AN520-10R8	.							SCREW (RH only)	5	Y	
	AN520-10R8	.							SCREW (RH only)	4	Z	
	AN742D10	.							CLAMP (RH only)	1	DF	
	AN520-10R12	.							SCREW	2	AW	
	AN815-4D	.							UNION (RH only)	2		
	AN824-4D	.							TEE (RH only)	2		
	AN924-4D	.							NUT (LH only)	1	AW	
	AN924-4D	.							NUT (RH only)	3	Y	
	AN924-4D	.							NUT (RH only)	2	Z	
	AN941D4	.							ELBOW	2	AW	
	AN929-4	.							CAP ASSEMBLY (RH only)	2		
	AN929-4	.							CAP ASSEMBLY (RH only)	2	DF	
	AN6289-4	.							NUT	4	AW	
	AN6290-4	.							GASKET	8	AW	
	AN6291-4	.							RING	4	AW	
	AN363-1032	.							NUT (LH only)	1	Z	
	NAS43DD3-10	.							SPACER (RH only)	2	DF	
	NAS43DD3-24	.							SPACER (RH only)	1		
	NAS43DD3-28	.							SPACER (RH only)	3		
	NAS334CPA12	.							BOLT	4		
	NAS501-3-6A	.							BOLT (LH only)	1		
	NAS501-3-7A	.							BOLT (LH only)	1		
	NAS428-4-12	.							BOLT	4		
	NAS464-9-43	.							BOLT	1	AW	

NOTE: *1 S/C 476, 504, 397, 397A and 429 apply to 209-14901-1 and 209-14901-2.
S/C 476 and 504 apply to 209-14901-101, 209-14901-102, 209-14901-201 and 209-14901-202.
S/C 504 applies to 209-14901-301 and 209-14901-302.

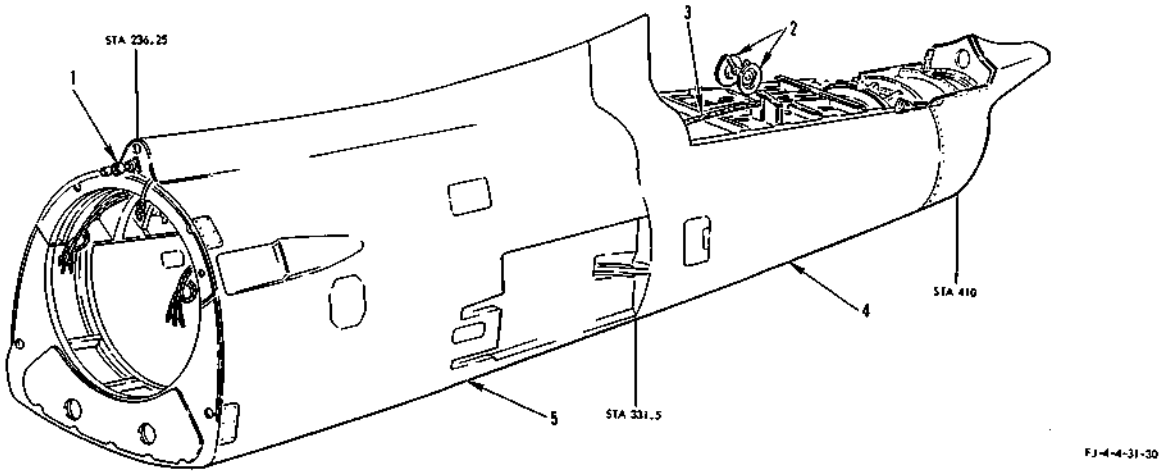

FIGURE 358 - SPARE AFT SECTION FUSELAGE ASSEMBLY

FIGURE & INDEX NO.	PART NUMBER	1 2 3 4 5 6 7 NOMENCLATURE	UNITS PER ASSY.	USABLE ON CODE	S/C NO.
358	209-31902	FUSELAGE ASSEMBLY, Aft section (spare)	1	AS	446
	209-31902-101	FUSELAGE ASSEMBLY, Aft section (spare)	1	FS	
	209-31902-201	FUSELAGE ASSEMBLY, Aft section (spare)	1	CF	
	209-31902-301	FUSELAGE ASSEMBLY, Aft section (spare)	1	FR	
-1	209-48807	. LINE, Fuel vent fuselage break to dive vent "Y"	1		
	209-48803-3	. LINE ASSEMBLY, Fuel aft fuselage cell dive vent	1		
	209-48803-7	. LINE ASSEMBLY, Vertical tail to deck fuel drain	1		
	209-48803-9	. LINE ASSEMBLY, Empennage deck to overboard fuel drain	1		
	209-48803-12	. LINE, Fuel aft fuselage cell climb vent crossover	1		
	209-48804	. LINE, Fuel aft fuselage cell transfer pump to outlet	1		
	209-48808	. LINE ASSEMBLY, Fuel aft cell dive vent "Y"	1		
	209-48812	. LINE ASSEMBLY, Fuel aft fuselage cell climb vent	1		
	209-48431	. FITTING ASSEMBLY, Fuel aft fuselage cell refueling inlet complete	1		
	209-48424	. FITTING, Fuel aft fuselage cell climb vent disconnect	1		
	209-48423	. FITTING, Fuel aft fuselage cell drain	1		
	209-48415	. FITTING, Fuel main vent field break disconnect	1		
	209-48412	. FITTING ASSEMBLY, Fuel aft fuselage cell transfer outlet	1		
	209-48406	. FITTING ASSEMBLY, Fuel aft fuselage cell dive vent	1		
	209-48405	. FITTING, Fuel dive vent fuselage station 331.5 bulkhead seal	1		
	209-48404-1	. FITTING, Fuel aft fuselage cell climb vent LH	1		
	209-48404-2	. FITTING, Fuel aft fuselage cell climb vent RH	1		
	209-48426	. ELBOW, Fuel aft fuselage cell transfer pump outlet	1		
	187-48370	. NIPPLE, Fuel boost pump seal drain	1		
	209-483115	. FILLER, Fuel baffle conical spacer	2		
	209-483117	. WASHER, Aft fuel cell baffle attaching	2		
	209-483119	. BAFFLE ASSEMBLY, Aft fuselage fuel cell	1		
	209-48414	. CUP, Aft fuselage fuel cell transfer outlet	1		
	209-48417	. SEAL, Aft fuselage fuel cell refueling inlet	1		
	209-48422	. CLIP, Aft fuselage fuel cell access door aft support	2		
	209-48432	. DOOR, Aft fuselage fuel cell access assembly of (supersedes 209-48420 for future procurement)	1		
-2	209-52032	. SURFACE CONTROL INSTALLATION, Aft fuselage	1		
	209-52051	. BRACKET, Horizontal stabilizer and rudder control fuselage sta 360 pulley	1	Z	
	209-52077	. BRACKET, Horizontal stabilizer and rudder control fuselage station 357 to station 362 pulley	1	Y	
	209-52218-31	. BUNGEE ASSEMBLY, Horizontal stabilizer control feel	1		
	209-52235	. ROD ASSEMBLY, Horizontal stabilizer control valve operating	1		
	209-52237	. SECTOR, Horizontal stabilizer control rear fuselage	1		
	209-52239-11	. LINK ASSEMBLY, Horizontal stabilizer control bungee	1		
	209-52240-11	. LINK ASSEMBLY, Horizontal stabilizer control valve	1		
	209-52241-11	. IDLER ASSEMBLY, Horizontal stabilizer control valve	1		
	209-52242-3	. BELLCRANK, Horizontal stabilizer control bungee trim	1		
	209-52248	. BALANCE WEIGHT, Horizontal stabilizer control sector	1		
	209-52290	. LINK, Horizontal stabilizer trim actuator support	1		
	209-522365	. BOLT, Elevator control linkage close tolerance 5/16 diameter	1		
	209-52417	. SUPPORT, Rudder yaw damper lower assembly of	1		
	209-52475	. ROD ASSEMBLY, Rudder control surface operating	1		
	209-52482	. SECTOR, Rudder control surface operating	1	ET	
	209-524171	. TRANSDUCER ASSEMBLY, Rudder pedal force	1	FR	
	209-52554	. LINK ASSEMBLY, Stick force controller drive	1		
	209-52483	. SUPPORT ASSEMBLY, Rudder control sector	1	ET	
	209-524172	. SUPPORT, Rudder control sector assembly of	1	FR	
	209-52556	. CLEVIS, Stick force control follow-up bellcrank	1		
	209-524186	. BUNGEE, Rudder control system artificial feel assembly of	1	FR	
	209-524184	. SPRING, Tension	1	FR	
-3	209-54032	. ELECTRICAL EQUIPMENT INSTALLATION, Fuselage sta 236 to sta 410	1		
	209-54240	. CLIP, Wing leading edge electrical	1		
	209-51600-1	. ADAPTER ASSEMBLY, Aft fuselage cell probe LH	1		
	209-51600-2	. ADAPTER ASSEMBLY, Aft fuselage cell probe RH	1		
	209-51611	. CABLE INSTALLATION, Instrument system aft fuselage	1		
	209-71611	. RADIO EQUIPMENT INSTALLATION, Fuselage sta 236.25 to sta 410	1		

SPARE AFT SECTION FUSELAGE ASSEMBLY

FIGURE & INDEX NO.	PART NUMBER	1	2	3	4	5	6	7	NOMENCLATURE	UNITS PER ASSY.	USABLE ON CODE	S/C NO.
358	AN4-20A	.	BOLT							1		
	AN4-4A	.	BOLT							4		
	AN4-5A	.	BOLT							42		
	AN4-7A	.	BOLT							6		
	AN5-15A	.	BOLT							1		
	AN507-1032R8	.	SCREW							27		
	AN509-10R10	.	SCREW							6	AS	
	AN509-10R10	.	SCREW							13	AR	
	AN509-10R7	.	SCREW							39		
	AN509-10R9	.	SCREW							1		
	AN509-416R19	.	SCREW							1		
	AN520-10R10	.	SCREW							9		
	AN520-10R12	.	SCREW							3		
	AN520-10R16	.	SCREW							1		
	AN520-10R8	.	SCREW							47	NF	
	AN520-10R8	.	SCREW							49	CF	
	AN520-10R8	.	SCREW							58	FR	
	AN520-10R20	.	SCREW							2	ET	
	AN520-10R20	.	SCREW							3	FR	
	AN520-10R22	.	SCREW							2		
	AN520-10R24	.	SCREW							1		
	AN6280-6	.	VALVE							1		
	AN6280-6	.	VALVE							2		
	AN6280-8	.	VALVE							1		
	AN6289-6	.	NUT							2		
	AN6289-8	.	NUT							1	ET	
	AN6289-8	.	NUT							2	FR	
	AN6290-4	.	GASKET							4		
	AN6290-8	.	GASKET							5	ET	
	AN6290-8	.	GASKET							9	FR	
	AN6291-6	.	RING							2		
	AN6291-8	.	RING							1	ET	
	AN6291-8	.	RING							2	FR	
	AN6292-6-20	.	HOSE ASSEMBLY							1		
	AN6292-8-37-1/2	.	HOSE ASSEMBLY							1		
	AN6292-6-18-1/2	.	HOSE ASSEMBLY							1		
	AN735D20	.	CLAMP							2		
	AN735D24	.	CLAMP							1		
	AN735D32	.	CLAMP							1		
	AN735D40	.	CLAMP							2		
	AN749-3-4	.	JUMPER							2		
	AN749-3-9	.	JUMPER							1		
	AN749-3-3	.	JUMPER							2		
	AN76A47	.	BOLT							1		
	AN815-6D	.	UNION							1		
	AN832-6	.	UNION							1		
	AN938D6	.	TEE							1		
	AN363C1032	.	NUT							39		
	AN924-4	.	NUT							1		
	AN924-4D	.	NUT							1		
	AN924-6	.	NUT							11	ET	
	AN924-6	.	NUT							12	FR	
	AN924-6D	.	NUT							8		
	AN924-8	.	NUT							4		
	AN924-8D	.	NUT							6		
	AN938-8	.	TEE							1	FR	
	NAS464-9-15	.	BOLT							2		
	NAS464-4A5	.	BOLT							2		
	NAS464-3-7	.	BOLT							1		
	NAS428KH4-10	.	BOLT							1		
	NAS43-3-48	.	SPACER							3		
	NAS43-3-40	.	SPACER							1		
	NAS43DD3-64	.	SPACER							1		
	NAS43DD3-16	.	SPACER							1		
	NAS43DD4-30	.	SPACER							2		
	NAS334PA16	.	BOLT							1		
	NAS334PA20	.	BOLT							1		
	NAS334PA24	.	BOLT							1		
	NAS334PA31	.	BOLT							1		
	NAS221-8	.	SCREW							1		
	NAS143-12	.	WASHER							2		
	NAS143-12C	.	WASHER							2		
	NAS143-6	.	WASHER							2		
	NAS143-6C	.	WASHER							2		
	NAS221-10	.	SCREW							64	FR	
	NAS43DD3-40	.	SPACER							1	FR	
	NAS43DD3-48	.	SPACER							1	FR	
	NAS221-11	.	SCREW							8	FR	

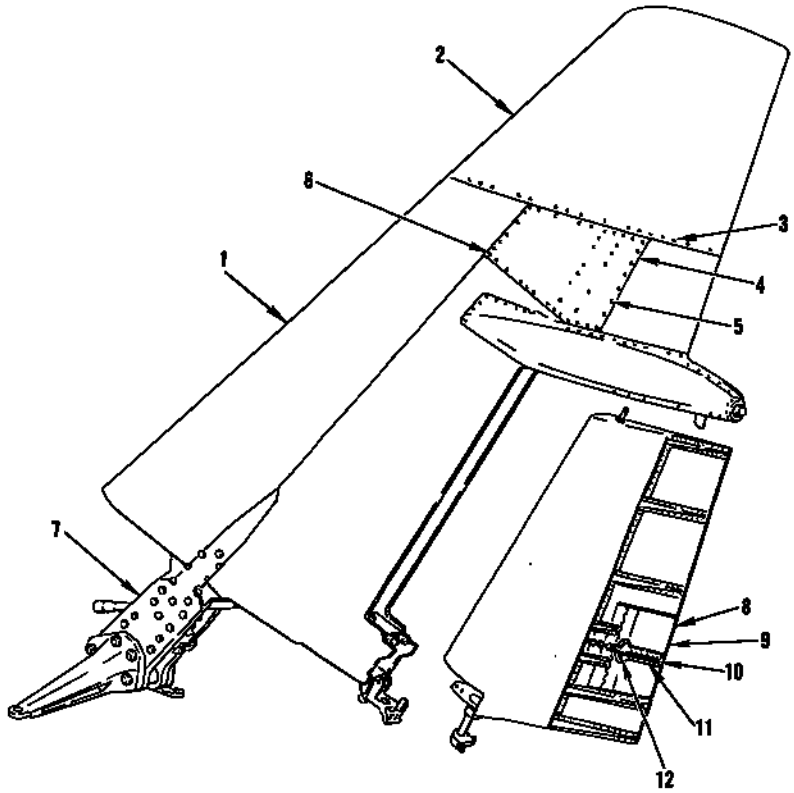

FJ-4/B-4-23-2

FIGURE 359 - SPARE VERTICAL STABILIZER AND RUDDER TRIM TAB ASSEMBLY

FIGURE & INDEX NO.	PART NUMBER	1 2 3 4 5 6 7 NOMENCLATURE	UNITS PER ASSY.	USABLE ON CODE	S/C NO.
359-1	209-23901-301	STABILIZER, Vertical (spare)	1	ET	
	209-23901-901	STABILIZER, Vertical (spare)	1	FR	
	CONSISTS OF				
-2	209-23325	. TIP ASSEMBLY, Vertical stabilizer splitter fairing plastic	1		
	ATTACHING PARTS				
-3	AN509-10R11	. SCREW	48		
	---*---				
-4	209-23384	. DOOR, Vertical stabilizer antenna access assembly of	1		
	ATTACHING PARTS				
-5	AN509-10R12	. SCREW	52		
-6	7S13/1032-14	. SCREW, 100° flush head corrosion-resistant (NA) (89372)	1		
	2W18-10	. WASHER, Flat (NA) (89372)	1		
	---*---				
-7	209-23002-31	. FRAME ASSEMBLY, Vertical stabilizer	1	ET	
	209-23002-41	. FRAME ASSEMBLY, Vertical stabilizer	1	FR	
	209-71123	. RADIO EQUIPMENT INSTALLATION, Vertical stabilizer	1		
	209-54432	. ELECTRICAL EQUIPMENT INSTALLATION, Empennage	1		
-8	209-24901-101	TAB, Rudder trim assembly of (spare) (replaced by 209-24531 coded Z)	1	Y	
	CONSISTS OF				
-9	209-24502	. TAB, Rudder trim assembly of	1		
-10	209-24519	. HORN, Rudder trim tab actuator	1		
-11	209-24522	. PLATE, Rudder trim tab riveting	1		
-12	NAS221-15	. BOLT	4		
	2W18-10	. WASHER, Flat (NA) (89372)	8		
	AN365-1032	. NUT	4		

THIS PAGE LEFT BLANK INTENTIONALLY

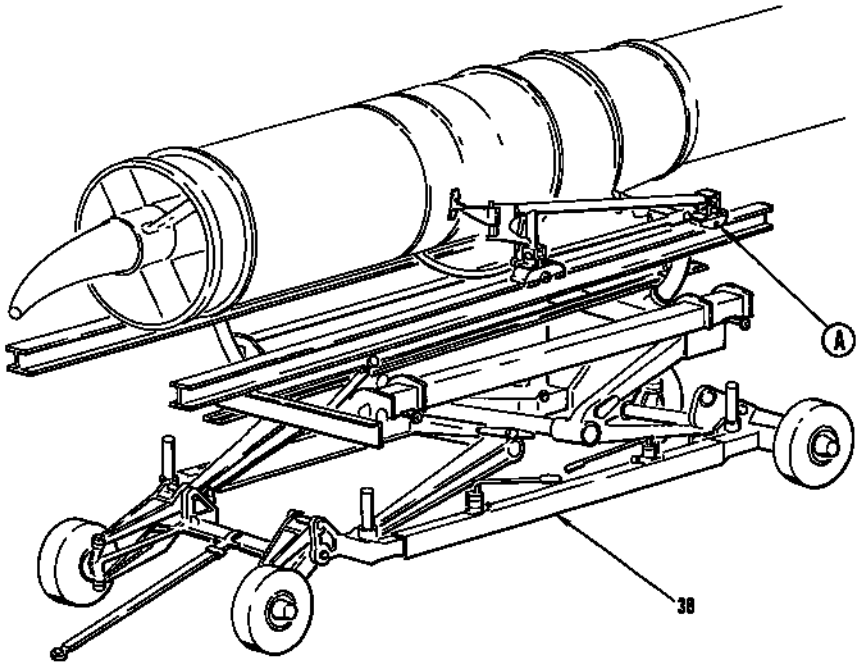

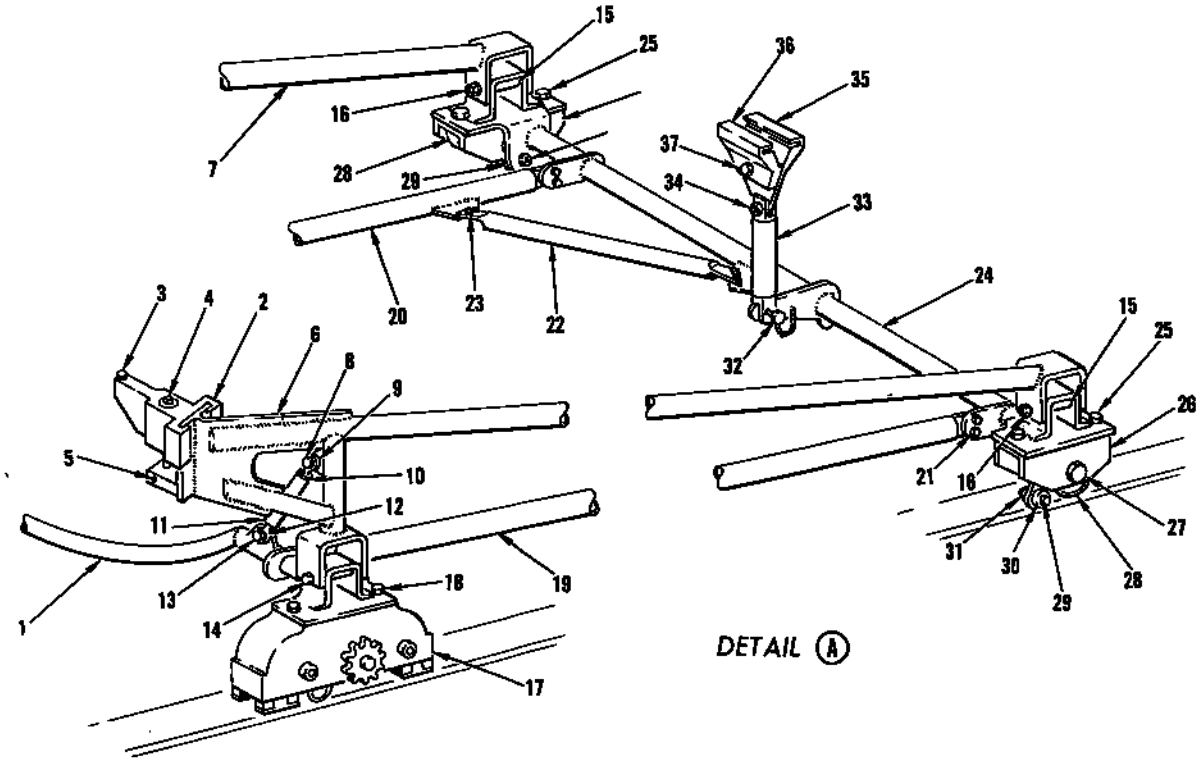

FIGURE 362A - ENGINE HANDLING ADAPTER ASSEMBLY - APPLICABLE TO AIR LOGISTICS DOLLY 4000A

ENGINE HANDLING ADAPTER ASSEMBLY - APPLICABLE TO AIR LOGISTICS DOLLY 4000A

FIGURE & INDEX NO.	PART NUMBER	1 2 3 4 5 6 7 NOMENCLATURE	UNITS PER ASSY.	USABLE ON CODE	S/C NO.
362A	E6551	ADAPTER ASSEMBLY, Engine handling	1		
-1	E6553	. TUBE, Engine adapter cross forward assembly of	1		
-2	E6555	. SUPPORT, Engine handling adapter assembly of	2		
-3	E2769	. . PIN, Forward side engine adapter carriage attaching	1		
-4	E6556	. SCREW, Engine handling adapter	2		
-5	NAS561-8-28	. PIN	2		
-6	E6552-1	. TUBE, Engine adapter carriage main drag side pick up assembly of LH (magnetic inspected)	1		
-7	E6552-2	. TUBE, Engine adapter carriage main drag side pick up assembly of RH (magnetic inspected)	1		
-8	BL-ST-8-0.875R	. BALL-LOK PIN (D. W. Price Corp.) (97978)	2		
	9C1-2-12	. CHAIN, Safety (NA) (89372)	2		
	E6565	. TUBE, Engine handling adapter assembly of	2		
-9	NAS645-175RL	. . FORK (supersedes AN161-175RL for future procurement)	1		
-10	AN316-8R	. . NUT	1		
-11	E6565-11	. . TUBE SUBASSEMBLY, Engine handling adapter assembly of	1		
-12	NAS645-175LL	. . FORK (supersedes AN161-175LL for future procurement)	1		
-13	AN8-14A	. BOLT	2		
	2W17-816	. WASHER, Corrosion-resistant (NA) (89372)	4		
	AN365-820	. NUT	2		
-14	AN8-34A	. BOLT	4		
	2W17-816	. WASHER, Corrosion-resistant (NA) (89372)	8		
-15	NAS43-8-142	. SPACER	4		
-16	AN365-820	. NUT	4		
-17	X105710	. ADAPTER (Air Logistics Corp.) (01413)	2		
-18	AN9-13A	. BOLT	4		
	2W17-916	. WASHER, Corrosion-resistant (NA) (89372)	4		
	MS35337-49	. WASHER	4		
-19	E2755-2	. TUBE ASSEMBLY, Engine adapter carriage base side (use on LH side) (magnetic inspected)	1		
-20	E2755-1	. TUBE ASSEMBLY, Engine adapter carriage base side (use on RH side) (magnetic inspected)	1		
-21	AN5-7A	. BOLT	8		
	2W17-516	. WASHER, Corrosion-resistant (NA) (89372)	16		
	AN365-524	. NUT	8		
-22	E2761-11	. TUBE, Engine adapter carriage base support (magnetic inspected)	1		
-23	AN4-6A	. BOLT	4		
	2W17-416	. WASHER, Corrosion-resistant (NA) (89372)	8		
	AN365-428	. NUT	4		
-24	E6554	. TUBE, Engine adapter cross aft assembly of	1		
-25	AN9-11A	. BOLT	4		
	2W17-916	. WASHER, Corrosion-resistant (NA) (89372)	4		
	AN365-918	. NUT	4		
-26	E6551-3	. HOUSING, Engine handling adapter assembly	2		
-27	AN10-34A	. BOLT	2		
	2W17-1016	. WASHER, Corrosion-resistant (NA) (89372)	4		
	4B21-S10-200	. BUSHING, Spacer (NA) (89372)	2		
	AN365-1018	. NUT	2		
-28	E6557	. ROLLER, Engine handling adapter	2		
-29	E6561	. BEARING, Engine handling adapter (rework of CR-22) (TOR) (60380)	2		
-30	E6560	. SPACER, Engine handling adapter	2		
	NAS43-8-40	. SPACER	2		
	2W17-816M	. WASHER, Corrosion-resistant (NA) (89372)	2		
-31	AN320-8	. NUT	2		
	AN380-C3-6	. COTTER PIN	2		
-32	BL-ST-5-0.812R	. BALL-LOK PIN (D. W. Price Corp.) (97978)	1		
	9C1-2-12	. CHAIN, Safety (NA) (89372)	1		
-33	E2765-3	. SUPPORT, Engine adapter carriage tension tie aft	1		
-34	AN5-12A	. BOLT	1		
	2W17-516	. WASHER, Corrosion-resistant (NA) (89372)	1		
	AN365-524	. NUT	1		
-35	E2764	. FITTING, Engine adapter carriage attachment aft (magnetic inspected)	1		
-36	E2763	. FITTING, Engine adapter carriage attachment aft (magnetic inspected)	1		
-37	E2771	. BOLT, Engine adapter tail pipe clamp (magnetic inspected)	1		
	AN381-3-8	. COTTER PIN	1		
-38	4000A	DOLLY (Air Logistics Corp.) (01413)	1		

THIS PAGE LEFT BLANK INTENTIONALLY

AFT FUSELAGE HANDLING ADAPTER ASSEMBLY - APPLICABLE TO AIR LOGISTICS DOLLY 4000A

FIGURE & INDEX NO.	PART NUMBER	1 2 3 4 5 6 7 NOMENCLATURE	UNITS PER ASSY.	USABLE ON CODE	S/C NO.
365	E6076	ADAPTER ASSEMBLY, FJ-3, FJ-4 and FJ-4B aft fuselage handling (NA) (89372)	1		
-1	E3837	. ADAPTER ASSEMBLY, FJ-3, FJ-4 and FJ-4B aft fuselage rear attaching (NA) (89372)	1		
-2	AN9-13A	. . BOLT	4		
-3	2W18-916	. . WASHER, Flat (NA)	4		
-4	100882	. . ROLLER ADAPTER ASSEMBLY (Air Logistics Corp) (01413)	2		
-5	AN365-624	. . NUT	4		
-6	2W18-616	. . WASHER, Flat (NA) (89372)	8		
-7	AN6-31A	. . BOLT	4		
-8	E3830	. . PLATE, Aft fuselage adapter to dolly attaching (NA) (89372)	2		
-9	AN365-624	. . NUT	4		
-10	2W18-916	. . WASHER, Flat (NA) (89372)	8		
-11	AN6-27A	. . BOLT	4		
-12	E3847	. . FITTING, Aft fuselage attaching plate adapter assembly of (NA) (89372)	2		
-13	AN365-624	. . NUT	4		
-14	2W18-616	. . WASHER, Flat (NA) (89372)	8		
-15	AN6-30A	. . BOLT	4		
-16	E3837-5	. . TUBE, FJ-3 and FJ-4 aft fuselage rear attaching adapter assembly (NA) (89372)	2		
-17	BL-H-6-0.500R	. . BALL-LOK PIN (D.W. Price Corp) (97978)	1		
	9C1-2-7	. . CHAIN, Safety (NA) (89372)	1		
-18	AN365-428	. . NUT	1		
-19	2W18-416	. . WASHER, Flat (NA) (89372)	2		
-20	AN4-10A	. . BOLT	1		
-21	NAS43-4-34	. . SPACER	1		
-22	E3844	. . FITTING, Aft frame to fuselage pickup (NA) (89372)	1		
-23	AN365-624	. . NUT	4		
-24	2W18-616	. . WASHER, Flat (NA) (89372)	8		
-25	AN6-33A	. . BOLT	4		
	NAS43-6DD128	. . SPACER	4		
-26	E3837-13	. . CHANNEL, FJ-3 and FJ-4 aft fuselage rear attaching adapter assembly (NA) (89372)	2		
-27	AN365-524	. . NUT	4		
-28	2W18-516	. . WASHER, Flat (NA) (89372)	4		
-29	AN509-516R14	. . BOLT	4		
-30	E3846	. . CLEVIS, Aft fuselage attaching fitting adapter (NA) (89372)	2		
-31	E2734	. . STUD, Adapter to aft fuselage aft attaching FJ-4 (NA) (89372)	1		
-32	E2733	. . STUD, Adapter to aft fuselage aft attaching FJ-3 (NA) (89372)	1		
-33	AN365-624	. . NUT	4		
-34	2W18-616	. . WASHER, Flat (NA) (89372)	8		
-35	AN6-33A	. . BOLT	4		
-36	E3837-9	. . CHANNEL, FJ-3 and FJ-4 aft fuselage rear attaching adapter assembly (NA) (89372)	2		
-37	E3837-3	. . TUBE, FJ-3 and FJ-4 aft fuselage rear attaching adapter assembly (NA) (89372)	1		
-38	E3836	. ADAPTER, Aft fuselage forward attaching fitting assembly of (NA) (89372)	1		
-39	AN9-14A	. . BOLT	4		
-40	2W18-916	. . WASHER, Flat (NA) (89372)	4		
-41	100882	. . ROLLER ADAPTER ASSEMBLY (Air Logistics Corp) (01413)	2		
-42	E3842	. . SUPPORT, Aft fuselage forward attaching fitting adapter (NA) (89372)	1		
	E3842	. . . SUPPORT SUBASSEMBLY, Aft fuselage forward attaching fitting adapter (NA) (89372)	2		
-43	BL-SL-7-1.625R	. . BALL-LOK PIN (D.W. Price Corp) (97978)	1		
	9C1-3-7	. . CHAIN, Safety (NA) (89372)	1		
	AN515-4R3	. . SCREW	1		
-44	E3838	. . TUBE, Aft fuselage forward attaching fitting adapter crossover assembly of (NA) (89372)	1		
-45	79-028-125-1.625	. . ROLLPIN (EN) (72962)	1		
-46	E3839	. . SHAFT, Aft fuselage forward attaching fitting adapter clevis (NA) (89372)	1		
-47	AN515-8R9	. . SCREW	4		
-48	E3845	. . PLATE, Aft fuselage forward attaching fitting adapter LH assembly of (NA) (89372)	1		
-49	E3843	. . BOLT, Aft fuselage forward LH clevis lock (NA) (89372)	1		
-50	E3840	. . CLEVIS, Aft fuselage forward fitting adapter LH (NA) (89372)	1		
-51	BL-SL-7-1.625R	. . BALL-LOK PIN (D.W. Price Corp) (97978)	1		
	9C1-3-7	. . CHAIN, Safety (NA) (89372)	1		
	AN515-4R3	. . SCREW	1		
-52	E3841	. . SUPPORT, Aft fuselage forward attaching fitting adapter RH assembly of (NA) (89372)	1		
-53	100628A	TRAILER, Model 4000A heavy duty positioning (Air Logistics Corp) (01413)	1		

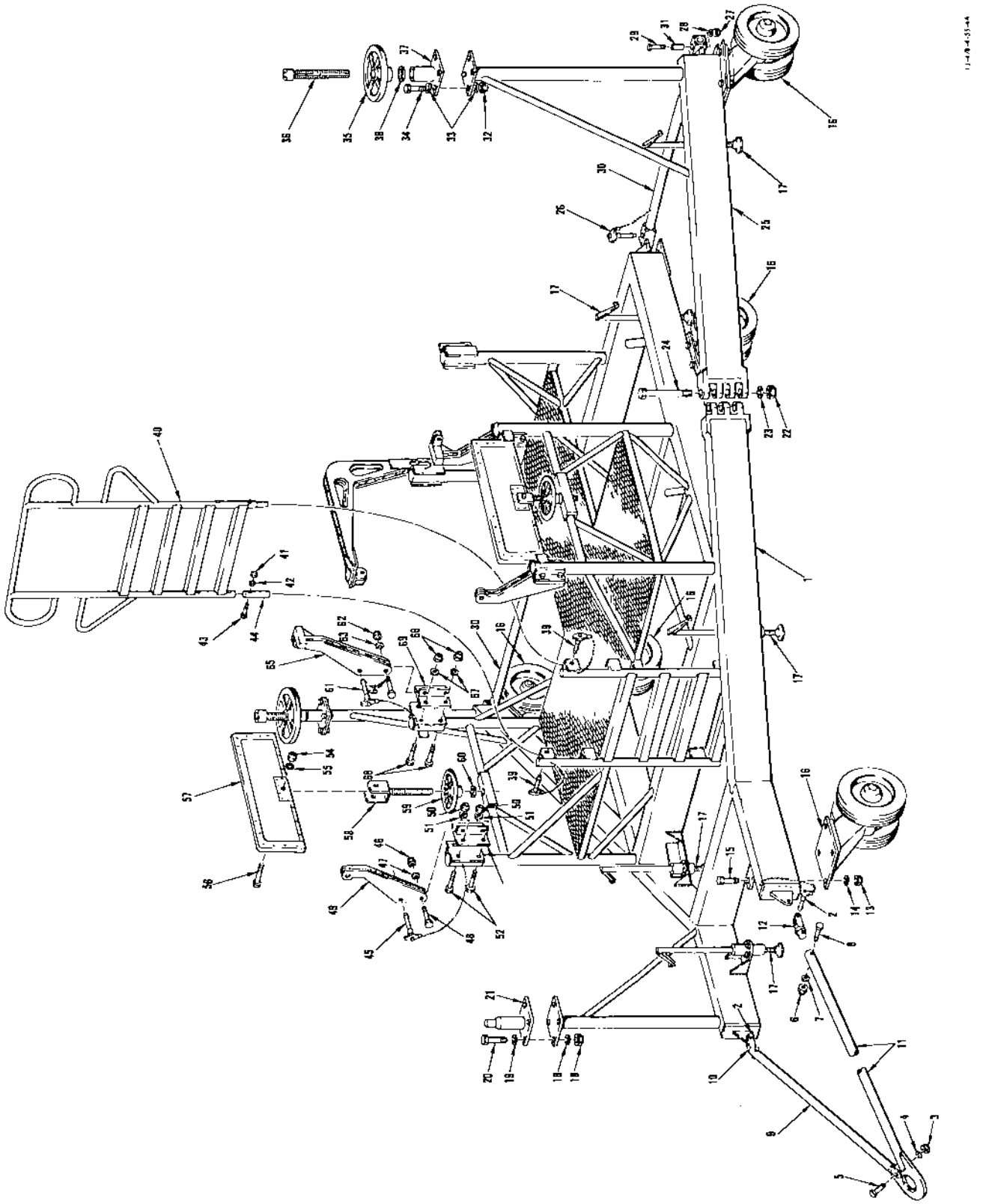

FIGURE 366 - WING TO FUSELAGE MATING FIXTURE ASSEMBLY

WING TO FUSELAGE MATING FIXTURE ASSEMBLY

FIGURE & INDEX NO.	PART NUMBER	1 2 3 4 5 6 7 NOMENCLATURE	UNITS PER ASSY.	USABLE ON CODE	S/C NO.
366	E3829	FIXTURE ASSEMBLY, Wing mating	1		
-1	E3776	. FRAME ASSEMBLY, Wing mating fixture	1		
-2	BL-ST5-1.300R	. BALL-LOK PIN (D. W. Price Corp) (97978)	2		
	9C1-3-7	. CHAIN, Safety (NA) (89372)	2		
	ATTACHING PARTS				
	AN504-6R8	. SCREW	2		
	---*---				
	E3789	. TOWBAR, Wing mating fixture assembly of	1		
-3	AN365-524	. . NUT	1		
-4	2W18-516	. . WASHER, Flat (NA) (89372)	1		
-5	AN5-15A	. . BOLT	1		
-6	AN365-428	. . NUT	2		
-7	2W18-416	. . WASHER, Flat (NA) (89372)	2		
-8	AN4-21A	. . BOLT	2		
-9	E3789-31	. . TOWBAR SUBASSEMBLY, Wing mating fixture assembly of	1		
-10	E3789-5	. . . TUBE END, Wing mating fixture assembly of towbar subassembly	1		
-11	E3789-21	. . TOWBAR SUBASSEMBLY, Wing mating fixture assembly of	1		
-12	E3789-5	. . . TUBE END, Wing mating fixture assembly of towbar subassembly	1		
-13	AN365-820	. NUT	20		
-14	2W1-32-28-63	. WASHER, Plain (NA) (89372)	20		
-15	AN8-16A	. BOLT	20		
-16	H16SA5R-SL8	. CASTER (BA) (06004)	5		
-17	A627	. JACK (BA) (06004)	7		
	ATTACHING PARTS				
	AN365-428	. NUT	42		
	2W1-16-16-63	. WASHER, Plain (NA) (89372)	42		
	AN4-12A	. BOLT	42		
	---*---				
-18	AN365-820	. NUT	4		
-19	2W1-32-28-63	. WASHER, Plain (NA) (89372)	8		
-20	AN8-16A	. BOLT	4		
-21	E3799	. BASE, Fuselage support assembly of	1		
-22	AN320-16	. NUT	2		
-23	2W1-64-56-63	. WASHER, Plain (NA) (89372)	2		
-24	E3777	. BOLT, Wing mating fixture leg attaching	2		
-25	E3792	. LEG ASSEMBLY, Wing mating fixture	1		
-26	BL-ST-8-4.400R	. BALL-LOK PIN (D. W. Price Corp) (97978)	2		
	9C1-3-9	. CHAIN, Safety (NA) (89372)	2		
	ATTACHING PARTS				
	AN504-6R8	. SCREW	2		
	---*---				
-27	AN365-820	. NUT	2		
-28	2W1-32-28-63	. WASHER, Plain (NA) (89372)	2		
-29	AN8-50A	. BOLT	2		
-30	E3797	. BRACE, Wing mating fixture leg assembly of (bushing end located at AN8-50A bolt)	2		
-31	4B19SB315	. . BUSHING, Press fit plain (NA) (89372)	2		
-32	AN365-820	. NUT	8		
-33	2W1-32-28-63	. WASHER, Plain (NA) (89372)	16		
-34	AN8-16A	. BOLT	8		
-35	E3820	. HANDWHEEL, Wing jack screw	2		
-36	E3802	. SCREW, Wing jack	2		
-37	E3800	. BASE, Wing jack screw assembly of	2		
-38	2W2B128-96-90	. WASHER, Thrust (NA) (89372)	2		
-39	BL-ST4-2.200R	. BALL-LOK PIN (D. W. Price Corp) (97978)	2		
	9C1-3-7	. CHAIN, Safety (NA) (89372)	2		
	ATTACHING PARTS				
	AN504-6R8	. SCREW	2		
	---*---				
-40	E3798	. LADDER, Wing mating fixture upper assembly of	1		
-41	AN365-624	. . NUT	2		
-42	2W18-616	. . WASHER, Flat (NA) (89372)	2		
-43	AN6-24	. . BOLT	2		
-44	E3798-5	. . ROD END, Wing mating fixture upper assembly of ladder	2		
-45	BL-ST-6-2.100R	. BALL-LOK PIN (D. W. Price Corp) (97978)	2		
	9C1-3-7	. CHAIN, Safety (NA) (89372)	2		
	ATTACHING PARTS				
	AN504-6R8	. SCREW	2		
	---*---				
-46	AN365-624	. NUT	2		
-47	2W1-24-20-63	. WASHER, Plain (NA) (89372)	2		
-48	AN6-25A	. BOLT	2		
-49	E3793	. JIG, Forward attaching point locating assembly of	2		
-50	AN365-524	. NUT	8		
-51	2W1-21-18-63	. WASHER, Plain (NA) (89372)	8		
-52	AN5-14A	. BOLT	8		
-53	E3805	. BLOCK, Forward attaching point jig locating assembly of	2		
-54	AN365-820	. NUT	2		
-55	2W1-32-28-63	. WASHER, Plain (NA) (89372)	2		
-56	AN8-40A	. BOLT	2		
-57	E3796	. PAD, Wing root contour assembly of	2		
-58	E3804	. SCREW, Wing pad assembly of	2		
-59	E3819	. HANDWHEEL, Wing pad screw	2		

WING TO FUSELAGE MATING FIXTURE ASSEMBLY

FIGURE & INDEX NO.	PART NUMBER	1	2	3	4	5	6	7	NOMENCLATURE	UNITS PER ASSY.	USABLE ON CODE	S/C NO.
366-60	2W2B88-72-90	.							WASHER, Thrust (NA) (89372)	2		
-61	BL-ST-8-2.100R	.							BALL-LOK PIN (D. W. Price Corp) (97978)	2		
	9C1-3-7	.							CHAIN, Safety (NA) (89372)	2		
	ATTACHING PARTS											
	AN504-6R8	.							SCREW	2		
	---*---											
-62	AN365-820	.							NUT	2		
-63	2W1-32-28-63	.							WASHER, Plain (NA) (89372)	2		
-64	AN8-26A	.							BOLT	2		
-65	E3794	.							JIG, Center attaching point locating assembly of	2		
-66	AN365-624	.							NUT	8		
-67	2W1-24-20-63	.							WASHER, Plain (NA) (89372)	8		
-68	AN6-15A	.							BOLT	8		
-69	E3806	.							BLOCK, Center attaching point jig locating assembly of	2		

LOOSE EQUIPMENT, SPECIAL TOOLS AND GROUND HANDLING EQUIPMENT LIST

FIGURE & INDEX NO.	PART NUMBER	1 2 3 4 5 6 7 NOMENCLATURE	UNITS PER ASSY.	USABLE ON CODE	S/C NO.
		LOOSE EQUIPMENT			
	AN01-1B40	HANDBOOK OF WEIGHT AND BALANCE DATA (GFP)	1		
	AN01-60JKD512	SUPPLEMENT HANDBOOK OF MAINTENANCE AND REPAIR INSTRUCTIONS (GFP)	1		
	AN02B35AAC2	HANDBOOK OF ENGINE SERVICE INSTRUCTION (GFP)	1		
	D674648	DUST COVER, Sight head (GFP)	1		
	NAVAER 01-60JKD501A	SUPPLEMENT PILOTS HANDBOOK (GFP)	1		
	NAVAER 01-60JKD502	HANDBOOK OF MAINTENANCE INSTRUCTIONS (GFP)	1	TA	
	NAVAER 01-60JKD512	SUPPLEMENT HANDBOOK OF MAINTENANCE AND REPAIR INSTRUCTIONS (GFP)	1	TA	
	NAVAER 01-60JKE502	HANDBOOK OF MAINTENANCE INSTRUCTIONS (GFP)	1	TB	
	NAVAER 01-60JKE502A	SUPPLEMENT HANDBOOK OF MAINTENANCE AND REPAIR INSTRUCTIONS (GFP)	1	TB	
	NAVAER 2033	BOOK, Engine log (GFP)	1		
	NAVAER 418	BOOK, Airplane log (GFP)	1		
	NAVAER 418A	AERONAUTICAL EQUIPMENT SERVICE RECORD (GFP)	1		
	No Number	REST COMPUTER (GFP)	1		
	209-523115	BALLAST INSTALLATION, Ammunition compartment	1		
	AN365-428	. NUT	16		
	AN4-23A	. BOLT	8		
	AN4-24A	. BOLT	8		
	2W18-416	. WASHER, Flat (NA) (89372)	16		
	209-532116	. BALLAST BLOCK, Ammunition box assembly	4		
	AN316-8	. . NUT	2		
	AN365-820	. . NUT	2		
	2W18-816	. . WASHER, Flat (NA) (89372)	4		
	209-532116-3	. . BALLAST BLOCK SUBASSEMBLY, Ammunition box assembly	1		
	209-532116-5	. . HANDLE, Ammunition box assembly ballast block	1		
	209-532117	. DOUBLER, Ammunition box ballast	8		
		SPECIAL TOOLS			
Ground Safety - Landing Gear					
	E1961	LOCK ASSEMBLY, Nose landing gear ground safety (NA) (89372)	1		
	AN960D4	. WASHER	2		
	BL-8-2.300	. BALL-LOK PIN (D. W. Price Corp) (97978) (interchangeable with A323 (AVDE) (84256)	1		
	12S1	. STREAMER, Red warning (NA) (89372)	1		
	9C1-3-12	. CHAIN, Safety (NA) (89372)	1		
	E2641	LOCK ASSEMBLY, Main landing gear ground safety (NA) (89372)	2		
	BL-5-1.700	. BALL-LOK PIN (D. W. Price Corp) (97978)	1		
	12S1	. . STREAMER, Red warning (NA) (89372)	1		
	146-33149	. . RING, Main landing gear ground safety streamer attaching	1		
	2W18-2	. . WASHER, Flat (NA) (89372)	2		
	9C1-3-12	. . CHAIN, Safety (NA) (89372)	1		
Ground Safety - Armament					
	E3764	PIN ASSEMBLY, 1200 pound bomb pylon and drop tank beam adapter ground safety (NA) (89372)	1	ET	
	12S1	. STREAMER, Red warning (NA) (89372)	1	ET	
	340	. PIN (Harley Patents, Inc) (00851) (interchangeable with BL-PP-3-4.000 (D. W. Price Corp) (97978))	1	ET	
	E6042	PIN ASSEMBLY, Universal pylon ground safety (NA) (89372)	1	FR	
	B4-22-A-50RN	. PIP PIN (AVDE) (84256)	1	FR	
	12S2	. STREAMER, Red warning (NA) (89372)	1	FR	
	E6107	PIN ASSEMBLY, Rocket and bomb pylon ground safety (NA) (89372)	2	FR	
Ground Safety - Power Plant					
	181-73057-101	SCREEN ASSEMBLY, Engine air intake	1		
	181-73057-23	. NYLON ROPE, Engine air intake screen assembly	2		
	181-73057-33	. SCREEN, Engine air intake screen assembly	1		
	181-73057-35	. RUBBER, Engine air intake screen assembly	1		
Securing Equipment - Pitot Tube and Angle of Attack Probe					
	176-73073	COVER ASSEMBLY, Pitot tube automatic release (supersedes 170-73073 for future procurement)	1		
	181-51032-11	COVER ASSEMBLY, Angle of attack probe	2		
	SLZ2276	. COVER (SLZ) (78423)	1		
	12S2	. STREAMER, Red warning (NA) (89372)	1		
	146-33149	. RING, Streamer attaching	1		
Securing Equipment - Wing					
	E2628	STRUT ASSEMBLY, Wingfold jury (NA) (89372) (see figure 361 for breakdown)	2	Y	
	E2628-101	STRUT ASSEMBLY, Wingfold jury (NA) (89372) (see figure 361 for breakdown)	2	Z	
	E2630-1	COVER ASSEMBLY, Wingfold enclosure LH (NA) (89372)	1		
	E2630-2	COVER ASSEMBLY, Wingfold enclosure RH (NA) (89372)	1		
	AN227-6	. FASTENER	2		
	AN227-7	. FASTENER	2		

LOOSE EQUIPMENT, SPECIAL TOOLS AND GROUND HANDLING EQUIPMENT LIST

FIGURE & INDEX NO.	PART NUMBER	1 2 3 4 5 6 7 NOMENCLATURE	UNITS PER ASSY.	USABLE ON CODE	S/C NO.
Securing Equipment - Wing (Cont)					
	AN227-8	. FASTENER	2		
	AN227-9	. FASTENER	2		
	E2650	. PAD, Wingfold enclosure cover (NA) (89372)	1		
	2100	. BUCKLE (HBDI) (98138)	1		
	4106	. END TIP (HBDI) (98138)	1		
	E2642	BATTEN ASSEMBLY, Aileron complete (NA) (89372)	2		
	AN365-428	. NUT	3		
	AN365-524	. NUT	1		
	AN4-12A	. BOLT	3		
	AN5-12A	. BOLT	1		
	E2643	. BOLT ASSEMBLY, Wing outer panel to batten attaching (NA) (89372)	2		
	PK350-6	. . WING NUT (PK) (45722)	1		
	E2644	. PIN, Wing outer panel to aileron batten assembly guide (NA) (89372)	1		
	RA2482-2	. EYE (ACA) (01976)	4		
	RA2487-2	. BALL (ACA) (01976)	4		
	2W18-416	. WASHER, Flat (NA) (89372)	3		
	2W18-516	. WASHER, Flat (NA) (89372)	1		
	4B21S5-010	. BUSHING, Spacer (NA) (89372)	1		
	E6041	MAT ASSEMBLY, Wing walkway FJ-4 (NA) (89372) (supersedes E2635 (NA) (89372) for future procurement)	2		
	AN230BS1	. GROMMET	2		
	No Number	. RING, 7-7/8 (NJ) (76786)	9		
	1F1-3	. FERRULE, Rope end and shock cord (NA) (89372)	6		
	200-1-1/8	. LOOP EYE, Snap (NJ) (76786)	6		
Securing Equipment - Fuselage					
	194-73061	SHIELD ASSEMBLY, Engine air intake	1		
	AN365-1032	. NUT	8		
	AN365-832	. NUT	4		
	AN509-10R10	. SCREW	8		
	AN960D10L	. WASHER	8		
	AN960D4	. WASHER	98		
	NAS220-9	. SCREW	4		
	NAS42DD5-12	. SPACER	1		
	12S1	. STREAMER, Red warning (NA) (89372)	1		
	2W1AL10-16-32	. WASHER, Plain (NA) (89372)	2		
	2W18-8	. WASHER, Flat (NA) (89372)	4		
	2010-2L	. RELEASE HINGE (BUR) (71243)	2		
	2010-2R	. RELEASE HINGE (BUR) (71243)	2		
	482J	. HANDLE (Smith Brothers Hardware)	2		
	194-73069	PLUG ASSEMBLY, Engine burner compartment cooling duct	2		
	12S1	. STREAMER, Red warning (NA) (89372)	1		
	2W1AL12-28-031	. WASHER, Plain (NA) (89372)	4		
	7S14-1032-45A	. SCREW, Round head corrosion-resistant (NA) (89372)	2		
	E2083-11	PLUG ASSEMBLY, Fuel tank vent line outlet (NA) (89372)	1		
	E2196	. BOLT (fuel tank vent line outlet plug) (NA) (89372)	1		
	E2812	. SEAL, Fuel tank vent line outlet (NA) (89372)	1		
	146-33149	. RING, Streamer attaching	1		
	2W1-34-32-32	. WASHER, Plain (NA) (89372)	1		
	2W1-34-52-93	. WASHER, Plain (NA) (89372)	1		
	50024A-1S-.004	. VALVE (JAPC) (91816)	1		
	52C1543-24	. STREAMER (USAF Dwg)	1		
	E2629	COVER ASSEMBLY, Cockpit enclosure and nose (NA) (89372)	1		
	AN227-155	. STUD	2		
	AN227-16	. PLATE	2		
	AN227-195	. STUD	2		
	AN227-20	. PLATE	2		
	AN229-4BL357	. FASTENER	1		
	E1028	. FITTING ASSEMBLY, Nose and enclosure cover station 87 attaching (NA) (89372)	1		
	1-1	. END TIP (NJ) (76786)	6		
	1F1-3	. FERRULE, Rope end and shock cord (NA) (89372)	2		
	187-73011	. TERMINAL ASSEMBLY, Cockpit enclosure cover strap	2		
	187-73011-101	TERMINAL ASSEMBLY, Cockpit enclosure cover strap	2		
	3105-1	. BUCKLE (NJ) (76786)	7		
	3250-1	. DEE (NJ) (76786)	6		
	E2631	SHIELD ASSEMBLY, Engine exhaust tail pipe (NA) (89372)	1		
	AN240-5	. EYELET	1		
	AN365-1032	. NUT	8		
	AN365-428	. NUT	1		
	AN365-832	. NUT	4		
	AN509-10R10	. SCREW	8		
	EC226	. ADHESIVE (MIM) (88525)	AR		
	NAS220-9	. SCREW	4		
	NAS42DD5-20	. SPACER	1		
	NA54-2L	. QUICK RELEASE ASSEMBLY (MAFN) (91927)	1		
	12S1	. STREAMER, Red warning (NA) (89372)	1		
	194-73055	. SHIELD ASSEMBLY, Engine exhaust tail pipe pin	1		
	2W1AL10-16-032	. WASHER, Plain (NA) (89372)	1		
	2W18-10	. WASHER, Flat (NA) (89372)	8		
	2W18-8	. WASHER, Flat (NA) (89372)	4		

LOOSE EQUIPMENT, SPECIAL TOOLS AND GROUND HANDLING EQUIPMENT LIST

FIGURE & INDEX NO.	PART NUMBER	1 2 3 4 5 6 7 NOMENCLATURE	UNITS PER ASSY.	USABLE ON CODE	S/C NO.
Securing Equipment - Fuselage (Cont)					
	2W18-416	. WASHER, Flat (NA) (89372)	1		
	482J	. HANDLE (Smith Brothers Hardware)	2		
	9E1-84-14	. EXTRUSION, Plastic (NA) (89372)	1		
	E2632	COVER ASSEMBLY, Engine trunnion cooling duct (NA) (89372)	2		
	AN320-4	. NUT	1		
	E2666	. BOLT ASSEMBLY, Engine trunnion cooling duct cover (NA) (89372)	1		
	E2667	. CONNECTOR, Engine trunnion cooling duct cover (NA) (89372)	1		
	E2668	. STOP, Engine trunnion cooling duct cover (NA) (89372)	1		
	12S2	. STREAMER, Red warning (NA) (89372)	1		
	2W1-16-24-64	. WASHER, Plain (NA) (89372)	1		
	59-028-125-0500	. ROLLPIN (EN) (72962)	1		
	E2633	PLUG ASSEMBLY, Fuselage station 198.5 heat exchanger (NA) (89372)	1		
	AN364-1032	. NUT	1		
	E2646	. TUBE END, Outlet and inlet hole plug (NA) (89372)	2		
	12S2	. STREAMER, Red warning (NA) (89372)	1		
	181-73066	. HANDLE, Engine mid-frame side leakage air discharge outlet plug	1		
	2W1AL12-28-081	. WASHER, Plain (NA) (89372)	2		
	7S14-1032-824	. SCREW, Round head corrosion-resistant (NA) (89372)	1		
	E2634	COVER ASSEMBLY, Fuselage station 243.437 compressor compartment airbleed duct (NA) (89372)	2		
	AW3-1/2T50	. STUD (DZ) (72794)	1		
	AW3-1/2T53	. STUD (DZ) (72794)	1		
	GH3-1/2	. STUD, Retainer (DZ) (72794)	2		
	NAS42DD6-12	. SPACER	1		
	12S45	. STREAMER, Red warning (NA) (89372)	1		
	2W1AL10-16-032	. WASHER, Plain (NA) (89372)	2		
	2W1AL7-16-015	. WASHER, Plain (NA) (89372)	2		
		GROUND HANDLING EQUIPMENT			
	E2605	TOW BAR ASSEMBLY, Airplane rearward towing (NA) (89372) (see figure 360 for complete breakdown)	1		
	E3584	BAR, Positioning nose gear assembly of (NA) (89372)	1		
	E3583	. ROD, Positioning bar nose gear (NA) (89372)	1		
Fuselage					
	E2535	SLING ASSEMBLY, Airplane hoisting (NA) (89372)	1		
	AN310-4	. NUT	8		
	AN310-9	. NUT	4		
	AN4-15	. BOLT	8		
	AN9-16	. BOLT	4		
	E2535-11	. CABLE ASSEMBLY, Airplane hoisting forward sling assembly (NA) (89372)	2		
	E2535-3	. . CABLE, Airplane hoisting forward sling assembly (NA) (89372)	AR		
	RA2490-18	. . SLEEVE BALL (ACA) (01976)	2		
	RA2944-18	. . SLEEVE BALL (ACA) (01976)	4		
	1T15-10-19-1	. . TERMINAL, Cable (NA) (89372)	1		
	E2535-21	. CABLE ASSEMBLY, Airplane hoisting aft sling assembly (NA) (89372)	2		
	E2535-3	. . CABLE, Airplane hoisting forward sling assembly (NA) (89372)	AR		
	RA2490-18	. . SLEEVE BALL (ACA) (01976)	2		
	RA2944-18	. . SLEEVE BALL (ACA) (01976)	4		
	1T15-10-19-1	. . TERMINAL, Cable (NA) (89372)	1		
	E2552	. RING ASSEMBLY, Airplane complete hoisting (NA) (89372)	1		
	E2581	. SPREADER ASSEMBLY, Airplane complete hoisting sling (NA) (89372)	1		
	E2582	. CLAMP, Airplane complete hoisting sling (NA) (89372)	4		
	2W18-416	. WASHER, Flat (NA) (89372)	8		
	2W18-916	. WASHER, Flat (NA) (89372)	4		
	E2645	BUNDLE, Jacking mooring and leveling (NA) (89372)	1		
	AN3-5A	. BOLT	2		
	AN3-7A	. BOLT	4		
	AN315-8R	. NUT	2		
	E1008	. SCREW ASSEMBLY, Plumb bob airplane leveling and target aligning (NA) (89372)	3		
	E1939-11	. FITTING, Rear fuselage cradle forward attaching LH (NA) (89372)	1		
	E1939-12	. FITTING, Rear fuselage cradle forward attaching RH (NA) (89372)	1		
	AN3-14A	. . BOLT	1		
	AN364-1032	. . NUT	1		
	E1938-3	. . FITTING, Rear fuselage cradle forward attaching LH (NA) (89372)	1		
	E1938-4	. . FITTING, Rear fuselage cradle forward attaching RH (NA) (89372)	1		
	E1941	. . FITTING, Rear fuselage cradle forward attaching (NA) (89372)	1		
	2W18-10	. . WASHER, Flat (NA) (89372)			
	E1957	. FITTING ASSEMBLY, Fuselage station 53.5 forward jacking (NA) (89372)	1		
	E2636	. PAD ASSEMBLY, Wing jack (NA) (89372)	2		
	E2637-3	. RING ASSEMBLY, Airplane jack and mooring (NA) (89372)	2		
	2W1AL56-56-64	. WASHER, Plain (NA) (89372)	2		
	2W18-816	. WASHER, Flat (NA) (89372)	2		
	E2672-11	FITTING ASSEMBLY, Fuselage station 236.25 auxiliary jacking LH (NA) (89372)	1		
	E2672-12	FITTING ASSEMBLY, Fuselage station 236.25 auxiliary jacking RH (NA) (89372)	1		
	E2673	. FITTING, Fuselage station 236.25 auxiliary jacking (NA) (89372)	1		
	T2586	STUD, Fuselage field break stud torque wrench (NA) (89372)	1		
	T2587	NUT, Field break stud torque wrench adapter (NA) (89372)	1		
	T2588-11	WRENCH, Forward to rear fuselage attaching fitting torque (NA) (89372)	1		

LOOSE EQUIPMENT, SPECIAL TOOLS AND GROUND HANDLING EQUIPMENT LIST

FIGURE & INDEX NO.	PART NUMBER	1 2 3 4 5 6 7 NOMENCLATURE	UNITS PER ASSY.	USABLE ON CODE	S/C NO.
Fuselage - Armament					
	T276-20	PEEP SIGHT ASSEMBLY, Fixed gun boresight target aligning (NA) (89372)	1		
	P116-447-10-24A	. STUD (TIN) (78553)	1		
	T2580-11	TOOL, Muzzle stabilizer adjustment (NA) (89372)	1		
	T2589-11	WRENCH, MK-12 guns aft gun mount elevation (NA) (89372)	1		
	T2668	RINGSIGHT ASSEMBLY, Fixed gun boresight target aligning (NA) (89372)	1		
	192-61098	. RING, Boresight target aligning sight	1		
	192-61099	. CROSS HAIR, Boresight target aligning sight	1		
	T2675	WRENCH, Aft gun mount azimuth adjustment (NA) (89372)	1		
	T2741	WRENCH, Aft gun mount elevation adjustment (NA) (89372)	1		
	NAS42-5-10	. SPACER	1		
	T2741-3	. HEAD, Aft gun mount elevation adjustment wrench (NA) (89372)	1		
	T2741-5	. ARM, Aft gun mount elevation adjustment wrench (NA) (89372)	1		
	T2741-7	. GRIP, Aft gun mount elevation adjustment wrench (NA) (89372)	1		
	T2741-9	. HANDLE, Aft gun mount elevation adjustment wrench (NA) (89372)	1		
Fuselage - Aft					
	100315	TRAILER, Air logistics model 3000 heavy duty transportation (HMDC) (84723)	1		
	E2590	SLING ASSEMBLY, Fuselage rear section hoisting (NA) (89372)	1		
	AN155-125L	. BARREL	1		
	AN161-125LL	. CLEVIS	1		
	AN161-125RL	. CLEVIS	1		
	AN320-5	. NUT	2		
	AN320-7	. NUT	3		
	AN5-11	. BOLT	2		
	AN667-7	. TERMINAL	1		
	AN668-10	. TERMINAL	1		
	AN668-7	. TERMINAL	1		
	AN7-13	. BOLT	3		
	E1572-3	. CLEVIS, Hoist cable to ring attaching (NA) (89372)	1		
	E1572-7	. CLEVIS, Hoist cable to ring attaching (NA) (89372)	1		
	E1581	. RING, Hoisting sling (NA) (89372)	1		
	E2592	. YOKE ASSEMBLY, Rear fuselage hoisting forward attaching (NA) (89372)	1		
	AN365-524	. . NUT	2		
	AN5-27A	. . BOLT	1		
	AN5-7A	. . BOLT	1		
	2W18-516	. . WASHER, Flat (NA) (89372)	4		
	E2593	. YOKE ASSEMBLY, Rear fuselage hoisting aft attaching (NA) (89372)	1		
	AN365-428	. . NUT	2		
	AN365-524	. . NUT	1		
	AN4-34A	. . BOLT	1		
	AN4-6A	. . BOLT	1		
	AN5-35A	. . BOLT	1		
	NAS43-4-192	. . SPACER	1		
	2W18-416	. . WASHER, Flat (NA) (89372)	4		
	2W18-516	. . WASHER, Flat (NA) (89372)	2		
	2W18-516	. WASHER, Flat (NA) (89372)	4		
	2W18-716	. WASHER, Flat (NA) (89372)	6		
	E2727	ADAPTER ASSEMBLY, FJ-4 aft fuselage to lockheed dolly 408600 (NA) (89372) (see figure 363 for complete breakdown)	1	ET	
	E2747	SUPPORT ASSEMBLY, Arresting gear hook (NA) (89372)	1		
	AN365-524	. NUT	4		
	AN5-11A	. BOLT	4		
	E2748	. CLEVIS (NA) (89372)	2		
	E3555	. PLATE (NA) (89372)	1		
	E3817	. PLATE, Arresting gear support (NA) (89372)	2		
	2W18-516M	. WASHER, Flat (NA) (89372)	8		
	E6076	ADAPTER ASSEMBLY, FJ-4 aft fuselage handling (used on 4000A (Air Logistics Corp) (01413) (see figure 349C for complete breakdown)	1		
	E3836	. ADAPTER, Aft fuselage forward attaching fitting assembly of (NA) (89372)	1		
	E3837	. ADAPTER ASSEMBLY, FJ-4 aft fuselage rear attaching (NA) (89372)	1		
	T2616-1	FIXTURE ASSEMBLY, Elevator rigging LH (NA) (89372)	1		
	T2616-2	FIXTURE ASSEMBLY, Elevator rigging RH (NA) (89372)	1		
	AN364-832	. NUT	4		
	AN509-8R17	. SCREW	4		
	T2615-1	. FIXTURE, Elevator rigging LH (NA) (89372) (LH assembly only)	1		
	T2615-2	. FIXTURE, Elevator rigging RH (NA) (89372) (RH assembly only)	1		
	T2622-101	. BOLT, Rigging fixture attaching (NA) (89372)	1		
	2W18-8L	. WASHER, Flat (NA) (89372)	4		
	T2684	FIXTURE ASSEMBLY, Surface control horizontal stabilizer (NA) (89372)	1		
	AN365-1032	. NUT	4		
	AN509-1011	. BOLT	4		
	PK74X2-4-4	. SCREW (PK) (45722)	4		
	T2625-3	. BOLT, Surface control horizontal stabilizer fixture attaching (NA) (89372)	1		
	T2625-5	. BOLT, Surface control horizontal stabilizer fixture attaching (NA) (89372)	1		
	T2739	. PLATE, FJ-4 rigging fixture (NA) (89372)	1		
	2W18-10	. WASHER, Flat (NA) (89372)	4		
	T2701	FIXTURE ASSEMBLY, FJ-4 splitter rudder rigging (NA) (89372)	1		
	AN3-17	. BOLT	2		
	AN365-1032	. NUT	2		
	AN365-832	. NUT	4		

LOOSE EQUIPMENT, SPECIAL TOOLS AND GROUND HANDLING EQUIPMENT LIST

FIGURE & INDEX NO.	PART NUMBER	1 2 3 4 5 6 7 NOMENCLATURE	UNITS PER ASSY.	USABLE ON CODE	S/C NO.
Fuselage - Aft					
	AN509-8R15	. SCREW	4		
	T2699	. FIXTURE, FJ-4 splitter rudder rigging (NA) (89372)	1		
	T2700	. PLATE, FJ-4 splitter rudder rigging fixture (NA) (89372)	1		
	T2702-3	. BOLT, Rigging fixture attaching general (NA) (89372)	1		
	T2702-5	. BOLT, Rigging fixture attaching general (NA) (89372)	1		
	2W18-10	. WASHER, Flat (NA) (89372)	2		
	2W18-8	. WASHER, Flat (NA) (89372)	2		
Fuselage - Forward					
	100628A	TRAILER, Air logistics model 4000A jet engine installation and removal (Air Logistics Corp) (01413)	1		
	408600	LOCKHEED DOLLY, Engine transportation (LH) (36659)	1		
	E1964-11	FITTING ASSEMBLY, Fuselage station 235.187 aft hoisting (NA) (89372)	2		
	E1963	. FITTING ASSEMBLY, Fuselage station 235.187 aft hoisting (NA) (89372)	1		
	2W18-3L	. . WASHER, Flat (NA) (89372)	1		
	9C1-2-6	. . CHAIN, Safety (NA) (89372)	1		
	E2617	. BOLT, Fuselage station 235.187 hoist fitting (NA) (89372)	1		
	52-022-094-1250	. ROLLPIN (EN) (72962)	1		
	E1965	FITTING ASSEMBLY, Fuselage station 52 forward hoisting (NA) (89372)	2		
	AN996-12	. RING	1		
	BL-3-2.1875R	. BALL-LOK PIN (D. W. Price Corp) (97978)	1		
	E1959	. FITTING ASSEMBLY, Fuselage station 52 forward hoisting (NA) (89372)	1		
	E1960	. BOLT, Fuselage station 52 and station 235.187 hoisting (NA) (89372)	1		
	52-022-094-1.250	. ROLLPIN (EN) (72962)	1		
	E2525	DRAG LINK ASSEMBLY, Lifting cradle engine adapter (NA) (89372)	2		
	AN530-6-4	. SCREW	2		
	E2568	SLING ASSEMBLY, Power plant hoisting (NA) (89372)	1		
	AN365-1032	. NUT	1		
	AN365-428	. NUT	1		
	AN365-624	. NUT	2		
	AN365-820	. NUT	2		
	AN380-3-3	. PIN	2		
	AN42-13A	. BOLT	1		
	AN43-14A	. BOLT	1		
	AN6-14A	. BOLT	1		
	AN6-15A	. BOLT	1		
	AN8-14A	. BOLT	1		
	AN8-16A	. BOLT	1		
	A1214	. PIP PIN (AVDE) (84256)	1		
	A823	. PIP PIN (AVDE) (84256) (may be replaced by 5440-8-23B (AVDE) (84256))	1		
	E2561	. LINK, Power plant handling sling (NA) (89372)	2		
	E2562	. FORK, Power plant handling sling (NA) (89372)	1		
	E2563	. PLATE, Power plant handling sling (NA) (89372)	1		
	E2565	. CLEVIS, Power plant handling sling (NA) (89372)	1		
	E2566	. TURNBUCKLE, Power plant handling sling (NA) (89372)	1		
	E2569	. RING, Power plant handling sling (NA) (89372)	1		
	E2700	. STRAP, Power plant sling (NA) (89372)	1		
	E2713	. CONNECTOR ASSEMBLY, Power plant sling (NA) (89372)	1		
	NAS43C4-35A	. SPACER	1		
	2W1-33-28-90	. WASHER, Plain (NA) (89372)	2		
	2W17-10	. WASHER, Corrosion-resistant steel (NA) (89372)	2		
	2W17-416	. WASHER, Corrosion-resistant steel (NA) (89372)	2		
	2W17-616	. WASHER, Corrosion-resistant steel (NA) (89372)	4		
	2W17-816	. WASHER, Corrosion-resistant steel (NA) (89372)	2		
	5R10	. RING, Chain retainer (NA) (89372)	3		
	9C1-2-12	. CHAIN, Safety (NA) (89372)	1		
	9C1-2-5	. CHAIN, Safety (NA) (89372)	1		
	9C1-2-7	. CHAIN, Safety (NA) (89372)	1		
	E2627	ADAPTER ASSEMBLY, Engine removal (NA) (89372) (see figure 364 for complete breakdown)	1		
	E2724	ADAPTER ASSEMBLY, J-65 engine handling complete (NA) (89372) (see figure 362 for complete breakdown)	1		
	T2533	CLAMP ASSEMBLY, Engine replacement tail pipe ball joint support complete (NA) (89372)	1		
	AN365-428	. NUT	1		
	AN394-79	. PIN	2		
	AN4-25A	. BOLT	1		
	T2518	. BLOCK, Engine replacement tail-pipe ball joint support (NA) (89372)	1		
	T2519	. SPACER, Engine replacement tail-pipe ball joint support threaded (NA) (89372)	1		
	T2520	. ARM, Engine replacement tail-pipe ball joint support (NA) (89372)	4		
	T2521	. SPACER ASSEMBLY, Engine replacement tail-pipe ball joint support (NA) (89372)	1		
	T2522	. BOLT, Engine replacement tail-pipe ball joint support (NA) (89372)	1		
Wing					
	E2598	SLING ASSEMBLY, Wing panel hoisting (NA) (89372)	1		
	AN320-5	. NUT	6		
	AN380-2-2	. PIN	6		

LOOSE EQUIPMENT, SPECIAL TOOLS AND GROUND HANDLING EQUIPMENT LIST

FIGURE & INDEX NO.	PART NUMBER	1 2 3 4 5 6 7 NOMENCLATURE	UNITS PER ASSY.	USABLE ON CODE	S/C NO.
Wing (Cont)					
	AN5-11	. BOLT	3		
	AN5-12	. BOLT	3		
	AN667-7	. TERMINAL	3		
	AN668-7	. TERMINAL	3		
	E1581	. RING, Hoisting sling (NA) (89372)	1		
	E1790	. RETAINER, Bolt (NA) (89372)	7		
	E1949-5	. CLEVIS, Wing panel hoisting (NA) (89372)	3		
	E2599	. FITTING, Wing panel intermediate inboard aft hoisting (NA) (89372)	1		
	E2600	. FITTING, Wing panel intermediate outboard hoisting (NA) (89372)	1		
	E2601	. FITTING, Wing panel intermediate forward hoisting (NA) (89372)	1		
	E2774	. BOLT, Wing hoisting sling (NA) (89372)	5		
	E2775	. BOLT, Wing hoisting sling (NA) (89372)	2		
	2W18-3	. WASHER, Flat (NA) (89372)	3		
	2W18-516	. WASHER, Flat (NA) (89372)	6		
	9C1-3-10	. CHAIN, Safety (NA) (89372)	1		
	9C1-3-15	. CHAIN, Safety (NA) (89372)	1		
	9C1-3-20	. CHAIN, Safety (NA) (89372)	1		
	E2639	PAD ASSEMBLY, Auxiliary wing jacking (NA) (89372)	2		
	E3579	SLING ASSEMBLY, Outboard wing panel (NA) (89372)	1		
	AN176-10A	. BOLT	3		
	AN315C6	. NUT	3		
	AN667-8	. TERMINAL	3		
	AN668-8	. TERMINAL	3		
	E1572-5	. CLEVIS, Hoist cable to ring attaching (NA) (89372)	1		
	E1581	. RING, Hoisting sling (NA) (89372)	1		
	E3580	. CLIP, Outboard center section sling assembly (NA) (89372)	1		
	E3581	. CLIP, Outboard leading edge sling assembly (NA) (89372)	1		
	E3582	. CLIP, Outboard leading edge hinge line sling assembly (NA) (89372)	1		
	1F6	. FERRULE, Cable (NA) (89372)	6		
	2W17-616M	. WASHER, Corrosion-resistant steel (NA) (89372)	3		
	5B28-41-11A	. BOLT ASSEMBLY, Ground handling equipment (NA) (89372)	1		
	5B28-41-6A	. BOLT ASSEMBLY, Ground handling equipment (NA) (89372)	1		
	5B28-51-11A	. BOLT ASSEMBLY, Ground handling equipment (NA) (89372)	1		
	E3829	FIXTURE ASSEMBLY, Wing mating (NA) (89372)	1		
	T308	TOOL, Wing hinge pin removal (NA) (89372)	1		
	T309	HANDLE ASSEMBLY, Wing hinge pin installation (NA) (89372)	1		
	T2590	PULLER ASSEMBLY, Wing upper hinge pin (NA) (89372)	1		
	T2591	. SHAFT, Wing upper hinge pin puller (NA) (89372)	1		
	T2592	. TUBE, Wing upper hinge pin puller (NA) (89372)	1		
	T2593	. NUT, Wing upper hinge pin puller (NA) (89372)	1		
	T2594	. KEY, Wing upper hinge pin puller (NA) (89372)	1		
	T2595	. PIN, Wing upper hinge pin puller (NA) (89372)	1		
	7S14-428-6A	. SCREW, Round head corrosion-resistant steel (NA) (89372)	1		
	T2596	PULLER, Wing attaching pin fuselage station 131 removal (NA) (89372)	1		
	T2598	DRIVER, Wing upper hinge pin (NA) (89372)	1		
	AN3-17A	. BOLT	1		
	AN365-1032	. NUT	1		
	T2599	. SHAFT ASSEMBLY, Wing hinge pin driver (NA) (89372)	1		
	T2600	. FITTING, Wing upper hinge pin driver (NA) (89372)	1		
	T2601	. PIN, Wing upper hinge pin driver (NA) (89372)	1		
	2W18-10	. WASHER, Flat (NA) (89372)	1		
	9C1-3-5	. CHAIN, Safety (NA) (89372)	1		
	T2602	GUIDE, Wing to fuselage attaching pin (NA) (89372)	1		
	T2605-1	FIXTURE ASSEMBLY, Aileron rigging LH (NA) (89372)	1		
	T2605-2	FIXTURE ASSEMBLY, Aileron rigging RH (NA) (89372)	1		
	AN174-24A	. BOLT	3		
	AN3-6A	. BOLT	2		
	AN3-7A	. BOLT	2		
	AN365-1032	. NUT	4		
	AN365-428	. NUT	3		
	AN520-416R16	. SCREW	2		
	PK74X2-4-4	. SCREW (PK) (45722)	4		
	T2603-201	. BOLT, Rigging fixture attaching (NA) (89372)	1		
	T2609-1	. FIXTURE, Aileron rigging LH (LH assembly only) (NA) (89372)	1		
	T2609-2	. FIXTURE, Aileron rigging RH (RH assembly only) (NA) (89372)	1		
	T2611	. SICKLE, Aileron rigging fixture (NA) (89372)	1		
	T2612-1	. FIXTURE, Droop leading edge rigging LH (LH assembly only) (NA) (89372)	1		
	T2612-2	. FIXTURE, Droop leading edge rigging RH (RH assembly only) (NA) (89372)	1		
	T2637-101	. BOLT, Aileron rigging fixture attaching aft (NA) (89372)	1		
	T2739	. PLATE, FJ-4 rigging fixture (NA) (89372)	1		
	2W18-10	. WASHER, Flat (NA) (89372)	4		
	2W18-416M	. WASHER, Flat (NA) (89372)	6		
	T2606-1	FIXTURE ASSEMBLY, Flap and droop leading edge rigging LH (NA) (89372) (superseded by T2747-1 (NA) (89372) for future procurement)	1	ET	
	T2606-2	FIXTURE ASSEMBLY, Flap and droop leading edge rigging RH (NA) (89372) (superseded by T2747-2 (NA) (89372) for future procurement)	1	ET	
	AN364-632	. NUT	4	ET	
	AN365-428	. NUT	3	ET	
	AN4-11A	. BOLT	2	ET	
	AN4-24A	. BOLT	4	ET	

LOOSE EQUIPMENT, SPECIAL TOOLS AND GROUND HANDLING EQUIPMENT LIST

FIGURE & INDEX NO.	PART NUMBER	1 2 3 4 5 6 7 NOMENCLATURE	UNITS PER ASSY.	USABLE ON CODE	S/C NO.
Wing (Cont)					
	AN515-8R16	. BOLT	4	ET	
	T2597-101	. BOLT, Flap rigging fixture attaching (NA) (89372)	1	ET	
	T2603-101	. BOLT, Rigging fixture attaching (NA) (89372)	1	ET	
	T2607-1	. FIXTURE, Inboard droop leading rigging LH (NA) (89372) (LH assembly only)	1	ET	
	T2607-2	. FIXTURE, Inboard droop leading rigging RH (NA) (89372) (RH assembly only)	1	ET	
	T2608-1	. FIXTURE, Flap rigging LH (NA) (89372) (LH assembly only)	1	ET	
	T2608-2	. FIXTURE, Flap rigging RH (NA) (89372) (RH assembly only)	1	ET	
	T2613	. SICKLE, Flap rigging fixture (NA) (89372)	1	ET	
	T2739	. PLATE, FJ-4 rigging fixture (NA) (89372)	1	ET	
	2W18-416	. WASHER, Flat (NA) (89372)	6	ET	
	2W18-416M	. WASHER, Flat (NA) (89372)	2	ET	
	2W18-8L	. WASHER, Flat (NA) (89372)	8	ET	
	T2610-1	FIXTURE ASSEMBLY, Outboard droop leading edge rigging LH (NA) (89372)	1		
	T2610-2	FIXTURE ASSEMBLY, Outboard droop leading edge rigging RH (NA) (89372)	1		
	AN364-832	. NUT	4		
	AN515-8R12	. BOLT	4		
	PK74x2-4-4	. SCREW (PK) (45722)	4		
	T2603-101	. BOLT, Rigging fixture attaching (NA) (89372)	1		
	T2622-101	. BOLT, Rigging fixture attaching (NA) (89372)	1		
	T2623-1	. FIXTURE, Outboard droop leading edge rigging LH (NA) (89372) (LH assembly only)	1		
	T2623-2	. FIXTURE, Outboard droop leading edge rigging RH (NA) (89372) (RH assembly only)	1		
	T2739	. PLATE, FJ-4 rigging fixture (NA) (89372)	1		
	2W18-8L	. WASHER, Flat (NA) (89372)	8		
	T2614	DRIVER, Wingfold manual uplock (NA) (89372)	1		
	T2697	GUIDE, Wing to fuselage attaching pin station 182.125 (NA) (89372)	2		
	T2698	GUIDE, Wing to fuselage attaching bolt station 209.80 (NA) (89372)	2		
	T2736	GUIDE, Aileron attaching bolt (NA) (89372)	1		
	T2747-1	FIXTURE ASSEMBLY, Flap spoiler and droop leading edge rigging LH (NA) (89372) (supersedes T2606-1 (NA) (89372) for future procurement)	1		
	T2747-2	FIXTURE ASSEMBLY, Flap spoiler and droop leading edge rigging RH (NA) (89372) (supersedes T2606-2 (NA) (89372) for future procurement)	1		
	AN535-6-6	. SCREW	2		
	AN3-5A	. BOLT	2		
	AN3-6A	. BOLT	4		
	AN350-1032	. NUT	2		
	AN364-832	. NUT	4		
	AN365-1032	. NUT	4		
	AN365-428	. NUT	3		
	AN4-11A	. BOLT	2		
	AN4-23A	. BOLT	3		
	AN515-8R16	. BOLT	4		
	T2597-101	. BOLT, Flap rigging fixture attaching (NA) (89372)	1		
	T2603-101	. BOLT, Rigging fixture attaching (NA) (89372)	1		
	T2607-1	. FIXTURE, Inboard droop leading edge rigging LH (NA) (89372)	1		
	T2607-2	. FIXTURE, Inboard droop leading edge rigging RH (NA) (89372)	1		
	T2608-1	. FIXTURE, Flap rigging LH (NA) (89372)	1		
	T2608-2	. FIXTURE, Flap rigging RH (NA) (89372)	1		
	T2746	. SICKLE, Flap and spoiler rigging fixture (NA) (89372)	1		
	T2747-3	. FIXTURE SUBASSEMBLY, Flap spoiler and droop leading edge rigging (NA) (89372)	2		
	T2845-1	. PLATE, Flap rigging fixture flap LH (NA) (89372)	1		
	T2845-2	. PLATE, Flap rigging fixture flap RH (NA) (89372)	1		
	T2854-1	. PLATE, Wing flap rigging fixture spoiler LH (NA) (89372)	1		
	T2854-2	. PLATE, Wing flap rigging fixture spoiler RH (NA) (89372)	1		
	T2856-3	. PLATE, Flap rigging droop leading edge LH (NA) (89372)	1		
	T2856-4	. PLATE, Flap rigging droop leading edge RH (NA) (89372)	1		
	2W18-10M	. WASHER, Flat (NA) (89372)	12		
	2W18-416	. WASHER, Flat (NA) (89372)	8		
	2W18-8L	. WASHER, Flat (NA) (89372)	8		
	AN535-6-6	. SCREW	2		
	T308	TOOL, Wing hinge pin removal (NA) (89372)	1		
	T309	HANDLE ASSEMBLY, Wing hinge pin installation (NA) (89372)	1		
	T310	TOOL, Wing hinge pin installation (NA) (89372)	1		
Wing - Fuel					
	E6085	STRAP ASSEMBLY, Fuel tank hoist (NA) (89372)	1	FR	
	BL-ST-6-1.00R	. BALL-LOK PIN (D. W. Price Corp) (97978)	2	FR	
	E6084	. FITTING, Fuel tank hoist strap end (NA) (89372)	2	FR	
	RA2487-4	. BALL (ACA) (01976)	2	FR	
	18-3M	. FERRULE, Rope end (NTS) (76691)	2	FR	
	T2705	WRENCH ASSEMBLY, Inflight refueling cap extended wet leading edge spanner (NA) (89372)	1		
	T2706	WRENCH ASSEMBLY, Wing probe fitting retainer extended wet leading edge spanner (NA) (89372)	1		
	T2707	WRENCH, Drop tank transfer fitting spanner assembly of (NA) (89372)	1		
	T2728-1	PLUG ASSEMBLY, Inflight refueling inboard wing fitting (NA) (89372)	1		
	AN350-1032	. NUT	1		
	T2728-11	. PLUG SUBASSEMBLY, Inflight refueling inboard wing fitting (NA) (89372)	1		
	AN3-23	. . BOLT	1		

LOOSE EQUIPMENT, SPECIAL TOOLS AND GROUND HANDLING EQUIPMENT LIST

FIGURE & INDEX NO.	PART NUMBER	1 2 3 4 5 6 7 NOMENCLATURE	UNITS PER ASSY.	USABLE ON CODE	S/C NO.
Wing - Fuel (Cont)					
	2W1AL12-52-90	. . WASHER, Plain (NA) (89372)	1		
	T2729-1	PLUG ASSEMBLY, Single point refueling inboard wing fitting (NA) (89372)	1		
	AN3-23	. BOLT	1		
	AN350-1032	. NUT	1		
	2W1AL12-36-90	. WASHER, Plain (NA) (89372)	2		
	T2833	WRENCH, Fuel tank pylon Aero 7A bomb rack (NA) (89372)	1	FR	
Wing - Armament					
	E6124	ARM ASSEMBLY, Hoisting adapter (used for hoisting Bullpup missile) (NA) (89372)	1		
	T3025	*1 ADAPTER ASSEMBLY, Hi-torque socket (NA) (89372)	1		
	E2674-11	WRENCH, Aero Model 15B bomb rack (NA) (89372)	1		
	E2675	WRENCH, 1200 pound bomb pylon rear mount bolt (NA) (89372)	1	ET	
	E2743-1	WRENCH ASSEMBLY, Pylon beam (NA) (89372)	1	ET	
	E2744	. PLATE, Bomb pylon (NA) (89372)	1	ET	
	E2745	. WRENCH, Socket head bomb pylon (NA) (89372)	1	ET	
	59-018-678-0750	. ROLLPIN (EN) (72962)	1	ET	
	E2746-11	WRENCH, 1200 pound bomb pylon (NA) (89372)	1		
	E3757	WRENCH, 6 inch missile launcher (NA) (89372)	1		
	T2709-11	WRENCH, Pylon 8 inch extension (NA) (89372)	1	FR	
	T2742-11	WRENCH, Pylon beam 14 inch extension (NA) (89372)	1	FR	
	T2743-11	WRENCH, Pylon beam 12 inch extension (NA) (89372)	1	FR	
	T2832	WRENCH ASSEMBLY, Aero 7A (NA) (89372)	1	FR	
	E2745-7	. WRENCH, Socket head bomb pylon (NA) (89372)	1	FR	
	T2831-3	. PLATE, Aero 7A pylon wrench (NA) (89372) (supersedes T2831 (NA) (89372) for future procurement)	1	FR	
	59-018-078-0750	. ROLLPIN (EN) (72962)	1	FR	
Wing - Landing Gear					
	T2644	WRENCH, Main landing gear brace to wing fitting torque (NA) (89372)	1		
	T2740	DOLLY ASSEMBLY, FJ-4 landing gear transportation (NA) (89372)	1		
		MISCELLANEOUS TOOLS			
	E2127	FITTING, Heat and vent system duct pressure test (NA) (89372)	1		
	E2461	BRACKET ASSEMBLY, Bomb hoisting (NA) (89372)	2		
	AN3-12A	. BOLT	1		
	AN364-1032	. NUT	1		
	AN396-41	. PIN	1		
	AN415-1-1	. PIN	1		
	E2464	. SCREW ASSEMBLY, Bomb hoist bracket attaching (NA) (89372)	2		
	AN271B8	. . JOINT	1		
	E2462	. . SCREW, Bomb hoist bracket attaching (NA) (89372)	1		
	E2463	. . SHAFT ASSEMBLY, Bomb hoist bracket attaching screw drive (NA) (89372)	1		
	E2801	. FITTING ASSEMBLY, Bomb hoist bracket attaching (NA) (89372)	2		
	E2804	. LINK, Bomb hoist attaching (NA) (89372)	2		
	E2594	PLUG ASSEMBLY, Fuel system vent line field break disconnect (NA) (89372)	1		
	AN350-8	. NUT	1		
	E2196	. BOLT, Fuel tank vent line outlet plug (NA) (89372)	1		
	E2595	PLUG ASSEMBLY, Fuel system vent drain line (NA) (89372)	1		
	AN806A	. PLUG	1		
	MS29512-4	. RING	1		
	12S1	. STREAMER, Red warning (NA) (89372)	1		
	146-33149	. RING, Streamer attaching	1		
	E3567	CABLE ASSEMBLY, LABS ground test (NA) (89372)	1		
	10C24B-128	. CONDUIT (NA) (89372)	1		
	97-3106-14S-2S	. PLUG (AMP) (02660)	1		
	97-3106-18-12P	. PLUG (AMP) (02660)	1		
	97-3106-18-20P	. PLUG (AMP) (02660)	2		
	97-3106-20-27S	. PLUG (AMP) (02660)	1		
	97-3106-22-14P	. PLUG (AMP) (02660)	1		
	97-3106-22-14S	. PLUG (AMP) (02660)	2		
	97-3106-22S-14SX	. PLUG (AMP) (02660)	1		
	97-3106-28-21SX	. PLUG (AMP) (02660)	1		
	E6045	SCALE ASSEMBLY, Spring (NA) (89372)	1		
	E6046	BLANKET ASSEMBLY, Sealing groove wing heating (NA) (89372)	1		
	HT3304M	ADAPTER ASSEMBLY, Socket (HIS) (73197)	1		
	HTB4M	. BLADE (HIS) (73197)	1		
	HT3305M	ADAPTER ASSEMBLY, Socket (HIS) (73197)	1		
	HTB5M	. BLADE (HIS) (73197)	1		
	HT3306M	ADAPTER ASSEMBLY, Socket (HIS) (73197)	1		
	HTB6M	. BLADE (HIS) (73197)	1		
	HT3307M	ADAPTER ASSEMBLY, Socket (HIS) (73197)	1		
	HTB7M	. BLADE (HIS) (73197)	1		
	HT3308M	ADAPTER ASSEMBLY, Socket (HIS) (73197)	1		
	HTB8M	. BLADE (HIS) (73197)	1		
	H161-16	WRENCH, Box rachet (OWT) (45225)	1		
	No Number	CALIBRATED MASTER FEELER (SAQ) (54465) (Model 964-3)	1		
	No Number	FUEL CAPACITOR, Fuel quantity gage checker Model-2 (Model-1 optional)	1		

QUICK ENGINE CHANGE ASSEMBLY LIST

FIGURE & INDEX NO.	PART NUMBER		1	2	3	4	5	6	7	NOMENCLATURE	UNITS PER ASSY.	USABLE ON CODE	S/C NO.
	AN6291-4		.	.	.	.				RING	1	ET	
	AN6291-6		.	.	.	.				RING	1	ET	
	AN6291-8		.	.	.	.				RING	1	ET	
	AN833-8D		.	.	.	.				ELBOW	1	ET	
	AN834-4D		.	.	.	.				TEE	1	ET	
	AN837-12D		.	.	.	.				ELBOW	1	ET	
	AN837-6D		.	.	.	.				ELBOW	1	ET	
	AN893-151D		.	.	.	.				REDUCER	1	ET	
	66WT200-1		.	.	.	.				PUMP ASSEMBLY, Variable delivery (NYB) (43491)	1	ET	
	209-58652	*12	.	.	.					HYDRAULIC EQUIPMENT ASSEMBLY, Pump engine driven variable delivery	1	FR	
	AN6289-16D		.	.	.	.				NUT	1	FR	
	AN6289-4		.	.	.	.				NUT	1	FR	
	AN6289-6		.	.	.	.				NUT	1	FR	
	AN6289-8D		.	.	.	.				NUT	1	FR	
	AN6290-12		.	.	.	.				GASKET	1	FR	
	AN6290-16		.	.	.	.				GASKET	1	FR	
	AN6290-4		.	.	.	.				GASKET	1	FR	
	AN6290-6		.	.	.	.				GASKET	1	FR	
	AN6290-8		.	.	.	.				GASKET	1	FR	
	AN6291-16		.	.	.	.				RING	1	FR	
	AN6291-4		.	.	.	.				RING	1	FR	
	AN6291-6		.	.	.	.				RING	1	FR	
	AN6291-8		.	.	.	.				RING	1	FR	
	AN6292-8-14-1/2		.	.	.	.				HOSE ASSEMBLY (utility hydraulic system - pressure)	1	FR	
	AN833-16D		.	.	.	.				ELBOW	1	FR	
	AN833-6D		.	.	.	.				ELBOW	1	FR	
	AN834-4D		.	.	.	.				TEE	1	FR	
	AN837-8D		.	.	.	.				ELBOW	1	FR	
	AN893-16D		.	.	.	.				REDUCER	1	FR	
	MS28741-16-0174		.	.	.	.				HOSE ASSEMBLY (utility hydraulic system - suction) (superseded by 601402-16D-0182 (AQ) (00624) for future procurement)	1	FR	
	601402-16D-0182		.	.	.	.				HOSE ASSEMBLY (utility hydraulic system) (AQ) (00624) (supersedes MS28741-16-0174 for future procurement)	1	FR	
	MS28741-6-0134		.	.	.	.				HOSE ASSEMBLY (utility hydraulic system - case drain)	1	FR	
	181-58269-3		.	.	.	.				TAG, Hyd hose assy ident (utility hyd system pressure)	1	FR	
	187-58368-19		.	.	.	.				TAG, Hyd hose assy ident (utility hyd system - case drain)	1	FR	
	187-58368-5		.	.	.	.				TAG, Hyd hose assy ident (utility hyd system suction)	1	FR	
	65WB06006-1		.	.	.	.				PUMP ASSEMBLY, Variable delivery (NYB) (43491) (supersedes 65WB06006 and is superseded by 65WB06006-2 for future procurement)	1	FR	
	65WB06006-2		.	.	.	.				PUMP ASSEMBLY, Variable delivery (NYB) (43491) (supersedes 65WB06006-1 for future procurement)	1	FR	
	3-55849-3	*7	.	.						BLANKET INSULATION, Engine exhaust tail pipe (FAHJ) (92526) (aluminum)	1	AQ	
	3-55849-5	*8	.	.						BLANKET INSULATION, Engine exhaust tail pipe (FAHJ) (92526) (aluminum)	1	AQ	
	30E13-6C		.	.						STARTER GENERATOR (GFP) (supersedes 30E12-6C for future procurement)	1	KC	
	30E13-6D		.	.						STARTER GENERATOR (GFP) (supersedes 30E13-6C for future procurement)	1	QP	
	30E13-6Q-F		.	.						STARTER GENERATOR (GFP) (supersedes 30E13-6D for future procurement)	1	QQ	
	420-.750-2.500SH		.	.						CLAMP (MAR) (98625)	1		
	5-54818-13	*1	.	.						BLANKET INSULATION, Engine exhaust tail pipe (FAHJ) (92526) (stainless steel)	1		
	5-54818-15	*2	.	.						BLANKET INSULATION, Engine exhaust tail pipe (FAHJ) (92526) (stainless steel)	1		
	5-54818-3	*1	.	.						BLANKET INSULATION, Engine exhaust tail pipe (FAHJ) (92526) (aluminum)	1	AP	271
	5-54818-5	*2	.	.						BLANKET INSULATION, Engine exhaust tail pipe (FAHJ) (92526) (aluminum)	1	AP	271
	5B25-616H10A		.	.						BOLT, Corrosion-resistant steel (NA) (89372)	4		
	5B25-616H11A		.	.						BOLT, Corrosion-resistant steel (NA) (89372)	4		
	5B25-616H12A		.	.						BOLT, Corrosion-resistant steel (NA) (89372)	16		
	5B26-516-10		.	.						BOLT, Inconel "X" (NA) (89372)	12		
	5R13-3		.	.						RING, Heat and vent sealing (NA) (89372)	2		
	5R17-10		.	.						RING, Synthetic oil resistant "O" (NA) (89372)	1		
	5R13-5		.	.						RING, Heat and vent sealing (NA) (89372)	1		
	209-42069		.							RESTRICTOR, Engine exhaust temperature adjusting 45°	4	AQ	
	209-42070		.							RESTRICTOR, Engine exhaust temperature adjusting 22.5°	5	AQ	
	209-47003		.							DUCT ASSEMBLY, Engine oil outlet RH side	1		
	209-47006		.	.						FLANGE, Engine oil vapor duct connection	1		

NOTE: *1 Items noted by *1 are interchangeable
*2 Items noted by *2 are interchangeable
*3 Items noted by *3 are interchangeable
*4 Items noted by *4 are interchangeable
*5 Items noted by *5 are interchangeable
*6 Items noted by *6 are interchangeable
*7 Items noted by *7 are interchangeable
*8 Items noted by *8 are interchangeable
*9 & *10 209-58651 together with items noted by *9 are interchangeable with 209-58650-31 together with items noted by *10
*11 & *12 209-58645 together with items noted by *11 are interchangeable with 209-58652 together with items noted by *12

NAVAER 01-60JKD-504

QUICK ENGINE CHANGE KIT LIST

QUICK ENGINE CHANGE KIT (Q. E. C. K.) DEFINITION

Q. E. C. K. consists of all items necessary for engine buildup less the government and contractor furnished accessories and engine.

209-42901	QUICK ENGINE CHANGE KIT	1	AP	
209-42901-11	QUICK ENGINE CHANGE KIT	1	SB	
209-42901-21	QUICK ENGINE CHANGE KIT	1	FR	
AN180-37	. BOLT	1		
AN310-10	. NUT	1		
AN363-1032	. NUT	7		
AN364-1032	. NUT	4		
AN365-1032	. NUT	49		
AN365-428	. NUT	6		
AN365-832	. NUT	1		
AN4-4A	. BOLT	12		
AN4H5A	. BOLT	12		
AN4044-1	. GASKET	3		
AN4045-1	. GASKET	1		
AN515-8R8	. SCREW	1		
AN520-10R10	. SCREW	2		
AN520-10R12	. SCREW	3		
AN520-10R14	. SCREW	1		
AN520-10R16	. SCREW	1		
AN520-10R8	. SCREW	51		
AN6290-12	. GASKET	3		
AN6290-4	. GASKET	1		
AN6290-6	. GASKET	1		
AN6290-6	. GASKET	2	FR	
AN6290-8	. GASKET	2	ET	
AN6290-8	. GASKET	4	FR	
AN6292-8-14-1/2	. HOSE ASSEMBLY (No. 1 flight control hydraulic system - pressure)	1	ET	
AN6292-8-14-1/2	. HOSE ASSEMBLY (utility hydraulic system - pressure)	1	FR	
AN6292-8-18-1/2	. HOSE ASSEMBLY (utility hydraulic system - pressure)	1		
AN6292-8-27-1/2	. HOSE ASSEMBLY (No. 2 flight control hydraulic system - pressure)	1		
AN742-14	. CLAMP	1		
AN742D16C	. CLAMP	3		
AN763-16	. GASKET	1		
AN783D12	. TEE	1		
AN815-4	. UNION	1	SW	418A
AN815-6	. UNION	2		
AN815D12	. UNION	1		
AN815D6	. UNION	1	FR	
AN815D8	. UNION	1	ET	
AN815D8	. UNION	2	FR	
AN837-4	. ELBOW	1		
AN837-6	. ELBOW	1		
AN837-8D	. ELBOW	1		
AN893-16D	. BUSHING	1		
AN924-4D	. NUT	2		
AN924-6	. NUT	1		
AN924-8D	. NUT	1		
AN929-8	. CAP	1		
AN939D6	. ELBOW	1	FR	
AN939D8	. ELBOW	1	ET	
AN939D8	. ELBOW	2	FR	
AN941D12	. ELBOW	1		
AT719	. LINE (AMK) (70510)	1		
C155-25-12	. UNION NUT (AQ) (00624)	3	ET	
C155-25-12	. UNION NUT (AQ) (00624)	2	FR	
C155-25-16	. UNION NUT (AQ) (00624)	1	FR	
C155-25-8	. UNION NUT (AQ) (00624)	6		
MS21919DF12	. CLAMP	5		
MS21919DF13	. CLAMP	1		
MS21919DF16	. CLAMP	2		
MS21919DF20	. CLAMP	3		
MS21919DF22	. CLAMP	1		
MS21919DF5	. CLAMP	5		
MS21919DF8	. CLAMP	4		
MS21919DG12	. CLAMP	1		
MS21919DG17	. CLAMP	1		
MS21919DG4	. CLAMP	1		
MS21919DG5	. CLAMP	4		
MS21919F12	. CLAMP	2		
MS21919F16	. CLAMP	1		
MS21919F19	. CLAMP	1		
MS21919H14	. CLAMP	2		
MS28741-12-0127	. HOSE ASSEMBLY (utility hydraulic system - suction)	1	ET	
MS28741-12-0134	. HOSE ASSEMBLY (utility hydraulic system - suction)	2	ET	

SECTION III Numerical Index

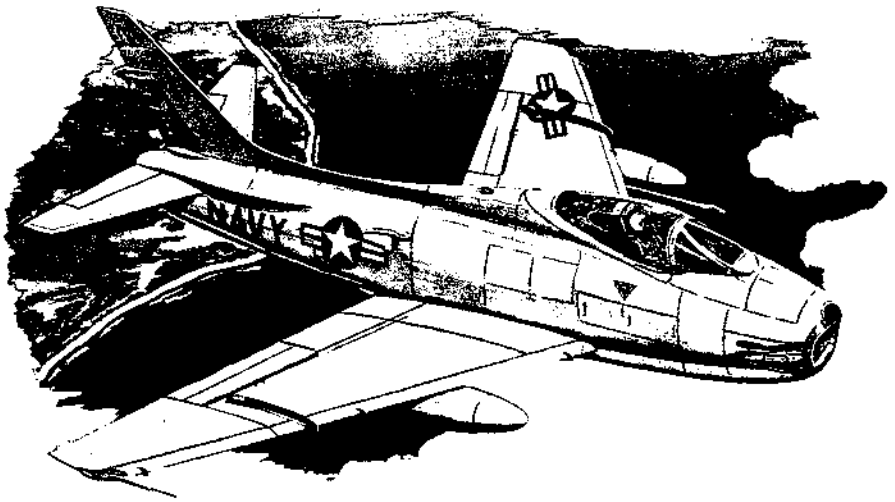

PART NUMBER	FIGURE AND INDEX	TOTAL QTY.	MICRO-FILM NUMBER	MAINTENANCE CODE DATA: SOURCE CODE	INST'L CAPABILITY	PRE-INST'L CAPABILITY	RECOVERABILITY	SUPPORT EQUIPMENT	FEDERAL STOCK NUMBER DATA: COGNIZANCE CODE	FEDERAL STOCK NUMBER	MFG. CODE (TSMC)
BACK PAN MODEL BP-1	55 - 28	1									
	57 - 50										
BALL BEARING	361 - 7	3									
	361 - 14										
	361 - 22										
BALL 3/16 DIAMETER	333 -100	2		P1							
CAP SCREW	342 - 5	3									
	342 - 23										
	342 - 42										
CAPACITOR FUEL	PG. 1010	1									
CARTRIDGE MK-1 MOD-0	55	1									
	57										
	62 - 19										
CARTRIDGE MK-3 MOD-0	55	1									
	57										
COMM EZ OUT NO. 1	PG. 1011	1									
COMM EZ OUT NO. 2	PG. 1011	1									
COMM EZ OUT NO. 3	PG. 1011	1									
COMM EZ OUT NO. 4	PG. 1011	1									
COMPUTER REST	PG. 1003	1									
CONTROL UNIT AERO 1B	251	2									
	361 - 17										
CONTROL UNIT AERO 2A	251	2									
	312 - 12										
	312 - 13										
	312 - 14										
	312 - 15										
CRUTCH TIP 3/4 IN ID	PG. 1012	2									
FEELER 964-3	PG. 1010	1									
FLOWMETER FUEL	248 - 4	1									
	PG. 1014										
HOSE ANTI G SUIT	223 - 29	1									
INDICATOR AIRSPEED	315 - 48	1							R	6610-663-8700	V1AN
	318 - 43										
INDICATOR CABIN PRES	252 - 9	1									
INDICATOR FUEL FLOW	248	1							R	6680-663-8881	V170
INDICATOR GYRO HORIZ	252 - 3	1									
	315 - 81										
JUMPER PLUG AERO 2A	251	4									
	311 - 14										
	311 - 17										
	311 - 18										
	311 - 19										
	311 - 20										
	311 - 48										
	311 - 49										
	311 - 50										
	311 - 51										
	312 - 16										
	312 - 17										
	312 - 18										
	312 - 19										
KIT CLOTH FILES	PG. 1003	1									
LAUNCHER AERO 15B	228 - 33	6									
	335 - 97										
	337 - 55										
	339 -124										
	340 - 46										
	348 - 32										
	348 - 55										
LAUNCHER AERO 15B,C	337 - 57	2									
	340 - 43										
	348 - 56										
LAUNCHER AERO 3A	336 - 1	6									
	336 - 2										
LAUNCHER AERO 5A	343 - 31	2									
	345A- 32										
	347 - 50										
LAUNCHER X5A	344 - 33	5									
	345 - 33										
	346 - 33										
LINK TYPE 8	185	2									
LUG MK-1 MOD-0	348 - 24	2									
O RING FUSE POST	284 - 30	2									
PARA-RAFT KIT	58	1									
	57										
POWER SUPPLY AERO 2A	251	2									
	253										
	311 - 14										
	311 - 15										
	311 - 16										
PRECISIONAIRE 253-5	PG. 1011	1									
RACK AERO 15B	339 -124	1									
RACK AERO 65	264 - 75	1									
	333 - 38										
RACK AERO 7A	334 -230	1									
	349 - 77										
RECEPTAKLE TYPE UPF5	274 - 2	7									
RING 7-7/8	PG. 1004	9									
SCREW 1/4-28NF3X1.25	104 - 19	2									
	105 - 27										
SEAT PAN MODEL SP-1	55 - 29	1									
	57 - 51										
SHOULDER HARNESS	56 - 9	1									
SIGHT UNIT MK-8MOD-8	330 - 27	1									
	330 - 28										
SWITCH BOMB BUTTON	265	1									
	286 - 15										
TIRE 20X4.4 EHP	64 -102	1		P1	F	O	S		R	2620-287-5248	Y120
TRAILER AFT FUSELAGE	PG. 1005	1									
TRAILER JET ENGINE	PG. 1006	1									
TRANSMIT. FUEL FLOW	248 - 4	1									
#2122-D-M21	269A- 47	1									
A-SP-157	122 - 18	1									
	213 - 44										

PART NUMBER	FIGURE AND INDEX	TOTAL QTY.	MICRO-FILM NUMBER	MAINTENANCE CODE DATA: SOURCE CODE	INST'L CAPABILITY	PRE-INST'L CAPABILITY	RECOVERABILITY	SUPPORT EQUIPMENT	FEDERAL STOCK NUMBER DATA: COGNIZANCE CODE	FEDERAL STOCK NUMBER	MFG. CODE (TSMC)
A-SP-157	295 - 7										
A-SP-161	213 - 30	1							R	5841-031-1168	F733
A-12663		1							R	1680-182-3477	X110
A-17117		1							R	1620-091-3247	X110
A-17188		1							R	5841-938-9046	FGEC
A-17351		1									
A-17352		1									
A-17397									R	1620-697-2593	X110
										OR	
	64 -104	1							R	5355-519-5728	FGEC
A-17455		1							R	5840-573-2588	FGEC
A-17457		1									
A-3613	178 - 21	1							R	5310-573-5515	X110
A-4139-4	224 - 14	1							R	6220-519-0751	D336
A-4139-5	224 - 15	1							R	6220-519-0729	D336
A-4139-6	224 - 13	1							R	6220-519-0730	D336
A-4255A	233 - 8	4							R	6220-506-1749	DGMC
A-4255A-1		4							R	6220-506-1749	DGMC
A-4255A-2	233	2									
	256 - 35										
A-4950A-1	256 - 33	2							R	6210-506-1724	D336
A-4950A-1-24	256 - 33	2									
A-5299	318 - 23	1									
A-5299-24	256 - 28	1									
	318 - 23										
A-6	21	2							R	6210-233-6256	D336
A-6100	256 - 34	1		P1	F	O	S		R	6220-299-6048	D336
A-6100-1	256 - 34	1							R	6220-299-6048	D336
A-6642		1									
A-6648	315 - 80	1									
A-6683	315 - 66	1							R	6210-300-8559	DGMC
A-6745	256 - 32	2							R	6220-548-0196	D336
	315										
	318 - 36										
	318 - 37										
A-6745-24	256 - 19	6							R	6210-548-0196	D336
	256 - 25										
	256 - 26										
	256 - 30										
	256 - 32										
	315										
	318 - 36										
	318 - 37										
A-6747	318	1									
A-6795-24	233	1									
	295 - 6										
A-6815	213 - 28								R	6210-284-0708	DGMC
	256 - 42										
	315										
	318										
A-6815-24	213 - 28	6		P1							
	256 - 8										
	256 - 23										
	256 - 24										
	256 - 42										
	318										
A-6939-632-24A	318	52									
A-702		4							R	1005-216-2964	B210
A-710	328 - 20	4		P1	F	O	S		R	1005-216-2965	B210
	328 - 21										
A-711-J		1							R	5945-634-8780	D334
A-711JB	279 - 20	1									
A-719		1							R	5340-205-5530	GM80
A-7504	318	1									
A-7505	318 - 38	1									
A-7505-24	256 - 27	2									
	318 - 38										
A-7548	224	1									
A-7648	224	1									
A-7796-24	224	1									
A-8069		1		P1	F	O	C		R	5355-600-6007	DGMC
A-9674		1							R	1620-218-8865	X110
A-9675		1							R	1620-474-1168	X110
AA-32305-R-2	124 - 66	1									
AA-60306-R	PG. 1020										
	PG. 1026										
	PG. 1027										
	122 - 5	3							R	1650-698-2516	ZVIK
	123 - 2										
	125 - 5										
	136 - 5										
	355 - 32										
	355 - 40										
	355 - 48										
AA-60306-RB	PG. 1020										
	PG. 1026										
	PG. 1027										
	123 - 2	3							R	1650-698-2516	ZVIK
	125 - 5										
	136 - 5										
	355 - 32										
	355 - 40										
	355 - 48										
AA-65036-R	355 - 40	1									
AA-65306-R	PG. 1020										
	PG. 1026										
	PG. 1027										
	122 - 5	6							R	1650-204-1692	ZVIK
	123 - 2										
	125 - 5										
	136 - 5										
	355 - 32										
	355 - 48										
AA-65306-RC	136 - 5	1									
AA-65302-R-S404	PG. 1020										

PART NUMBER	FIGURE AND INDEX	TOTAL QTY.	MICRO-FILM NUMBER	MAINTENANCE CODE DATA: SOURCE CODE	INSTL CAPABILITY	PRE-INSTL CAPABILITY	RECOVERABILITY	SUPPORT EQUIPMENT	FEDERAL STOCK NUMBER DATA: COGNIZANCE CODE	FEDERAL STOCK NUMBER	MFG. CODE (TSMC)
	PG. 1026										
	137 - 18	1		P1	F	O	R		R	1650-813-9480	ZVIK
	355 - 62										
AA-65502-R-5404C	137 - 18	1									
AA-65502-R-3		1									
AA2205W428	92 - 17	9							R	5310-638-9045	G190
	171 - 32										
	171 - 67										
AA2209-3-62BN		82		M		O					
AA2209-3-624N		8									
AA2209-720		250									
AA2223-5-428		82		M		O					
AA2223-5-824		8									
AA2316-428		1									
ABC74164		1							R	3110-159-1719	
AB502-10-8	98 - 65	4									
AB6290-6	355	1									
AC-1183-16		1							R	1650-603-1155	Y120
AD5721R	230	3							R	5930-090-4153	D334
	231 - 7										
	231 - 9										
AFS-6-07	127 - 75	1		P1	F	O	S		R	1650-540-3867	Y120
AF216CP18	352A- 18	1									
	352A- 25	1									
AF28756											
AF36F		1									
AF36M		1									
AF37F		1									
AF37M		1									
AF448-26997		1									
AF459-5-10		304									
AF462-6-45		30									
ALBLO	271 - 29	2									
ALX-32-12	58 -173	2									
	63 - 53										
ALX92-15		2									
AM-2014/AWW-1	286A- 12	1									
AM-608/ARA-25	209 - 11	1							R	5820-323-0206	FAMN
	209 - 21										
AMEL382-1	62 - 17	1									
AN3-4A		2									
AN3121-313	306	2									
AN/ARN-14E		1									
AN/ARN-21		1									
AN-N-6A	254 - 7	1									
	330 - 33										
AN-N6A	254 - 7	1									
AN-10A	61 -108	1									
AN8451	183 - 69	1									
	271 - 35										
AN01-1840	PG. 1003	1									
AN01-60JKD512	PG. 1003	1									
AN02835AAC-3		1									
AN02835AAC2	PG. 1003	1									
AN10-17		2									
AN10-20A		1									
AN10-34A	362A- 27	2									
AN10-36A		1									
AN100C-3		6		P1					R	4030-262-1889	G313
AN100C-4	334	1									
AN100C5	334	1									
AN12-31A	344 - 3	2									
AN12A		2									
AN12H29A	331 - 13	1									
AN12H30A	331	1									
AN122584	104	4									
	105										
	123										
	125 - 2										
	136 - 2										
	137 - 2										
	355										
AN122693		2							R	5315-241-2921	GM80
AN122697		2									
AN122721		2							P	5315-244-0514	GM80
AN123969		1							P	5330-527-8171	GB90
AN123995		1							P	5330-599-2979	GB90
AN13-25A		2									
AN130-4		1									
AN155-125L	PG. 1006	1									
AN155-16L	180 - 79	6							R	5340-184-4450	G313
	203 - 32										
	203 - 91										
	204 - 23										
	204 - 27										
AN155-16S	59 - 51	9							R	5340-184-4448	G313
	195 - 45										
	195 -117										
	196 - 62										
	196 - 63										
	200 - 44										
	200 -110										
	203 - 68										
AN155-32S	184 -116	2									
	188 - 29										
AN155-32S	184 -100	1									
AN155-46S	200 - 21	1							R	5340-184-4473	G313
AN155-8L	86 - 22	1							R	5340-184-4456	G313
AN155-8S	197 - 29	3							R	5340-184-4449	G313
	198 - 24										
AN168-1197D		1									
AN161-125LL	PG. 1006	1									
AN161-125RL	PG. 1006	1									
AN161-16LS	59 - 52	1							R	5340-257-3772	G313
AN161-16RS	59 - 50	1							R	5340-251-7025	G313

PART NUMBER	FIGURE AND INDEX	TOTAL QTY.	MICRO-FILM NUMBER	MAINTENANCE CODE DATA: SOURCE CODE	INSTL CAPABILITY	PRE-INSTL CAPABILITY	RECOVERABILITY	SUPPORT EQUIPMENT	FEDERAL STOCK NUMBER DATA: COGNIZANCE CODE	FEDERAL STOCK NUMBER	MFG. CODE (TSMC)
AN161-32LL	362	2									
AN165-428		2									
AN17-13A		2									
AN173-10A	171 - 41	7							R	5306-292-6176	G1AN
	181 - 33										
AN173-11A	171	4							R	5306-182-1521	G1AN
AN173-12A	182 - 59	5							R	5306-182-1522	G1AN
	184 - 43	1									
AN173-13A		1							R	5306-182-1523	G1AN
AN173-14A		1							R	5306-182-1552	G1AN
AN173-15A	17 - 27	2							R	5306-180-3343	G1AN
AN173-3A	172	1									
AN173-5A	172	1									
	357										
AN173-6	358	4									
AN173-6A	163	5							R	5306-182-1519	G1AN
	171										
	172	1									
	181 - 36										
	188 - 38										
	357										
AN173-7A	171	10							R	5306-182-1520	G1AN
	188 - 32										
	271										
	357										
	358										
AN173A7	183 - 59	1									
	183 - 68										
AN174-10	160	4							R	5306-292-6140	G1AN
	198 -134										
AN174-10A	138 - 15	4							R	5306-292-6178	G1AN
	176 - 46										
	176 - 98										
	182 -106										
	183 -104										
	205 -103										
AN174-11	172 - 53	1									
	179 - 6										
AN174-11A	175 - 20	7							R	5306-292-6180	G1AN
	182 - 32										
	183 - 33										
	205 - 29										
	205 -113										
	358										
AN174-12	160	12							R	5306-080-1738	G1AN
	172	1									
	172 - 22	1									
	172 - 33	1									
	172 - 52	1									
	172 - 60	1									
	172 - 77	1									
	175 - 3										
AN174-12A	86 - 13	14							R	5306-292-9294	G1AN
	113 - 53										
	176 - 66										
	180 -108										
	181 - 17										
	182										
	183										
	184 -124	2									
	185 - 84										
	205 - 91										
AN174-13	172	1									
	175 - 5										
AN174-13A	80 - 38	12							R	5306-182-1795	G1AN
	128 - 74										
	128 - 87										
	138 - 39										
	155 - 19										
	174 - 15										
	174 - 67										
	175 - 46										
	180	1									
	180 -131										
	184 - 7										
	184 - 46	1									
	205 - 94	1									
AN174-14A	80 - 35	1									
AN174-15A	80 - 31	5							R	5306-182-1797	G1AN
	182 - 10										
	183 - 10										
	184 - 28	1									
	194 - 34										
	358										
AN174-16	175 -100	1									
AN174-17A	179 - 29	3							R	5306-182-1799	G1AN
AN174-20A	205 - 51	3							R	5306-182-1800	G1AN
AN174-21A	182	2							R	5306-182-1801	G1AN
	183										
	198 -170										
	358										
AN174-22A	89 - 77	3									
AN174-23A	174 - 3	3							R	5306-182-1803	G1AN
AN174-24	138 - 6	3							R	5306-180-1743	G1AN
AN174-24A	PG. 1002	3							R	5306-180-2758	G1AN
AN174-25	176 - 51	1									
AN174-25A	174 - 55	6							R	5306-180-2759	G1AN
	174 - 84										
	184 -130	1									
	185 - 90										
	198 -128										
	198 -152										
	270 - 83										
AN174-26A	176 - 66	1									
AN174-34A		1							R	5306-180-2766	G1AN

PART NUMBER	FIGURE AND INDEX	TOTAL QTY.	MICRO-FILM NUMBER	MAINTENANCE CODE DATA: SOURCE CODE	INST'L CAPABILITY	PRE-INST'L CAPABILITY	RECOVERABILITY	SUPPORT EQUIPMENT	FEDERAL STOCK NUMBER DATA: COGNIZANCE CODE	FEDERAL STOCK NUMBER	MFG. CODE (TSMC)
AN174-42A	188 - 9	1							R	5306-638-5798	G1AN
AN174-5A	21 -144	2									
	21 -145										
	175										
AN174-6A	16 - 59	6							R	5306-206-4910	G1AN
	16 - 62										
	16 - 66										
	180 - 85										
	180 -116										
AN174-7A	16 - 49	9							R	5306-206-5748	G1AN
	16 -172										
	21 -146										
	113 - 52										
	175 - 57										
	168 - 11										
	188 - 21										
	168 - 71										
	168 - 78										
	358										
AN174-8A		2									
AN174A11	13 - 8	3									
AN174A12A	182 - 41	2									
	183 - 42										
AN174C13		2							R	5305-180-1722	G1AN
AN174H10A		4							R	5306-292-8285	G1AN
AN174H11A		4									
	125	4									
AN174H12A	358	1							R	5306-285-5327	G1AN
AN174H4A	176 - 61	4									
AN174H5A	138 - 42	2									
AN174H6A	155 - 4	4									
AN175-10	16 - 35	2									
AN175-11A	16 - 37	2									
AN175-12A	168 - 63	1							R	5306	
	189 - 30										
	205 - 76										
	205 - 79										
	358										
AN175-13A	90 - 11	2							R	5306-283-0143	G190
AN175-14A		1							R	5306-182-1892	G190
AN175-15		1							R	5306-180-0470	G1AN
AN175-31A	186 - 9	2							R	5306-292-8256	G1AN
	189 - 18	1									
AN175-33	182 -113	1							R	5300-C00-0421	G1AN
AN175-34A	188 - 53	1									
	189 - 18										
	358										
AN176-10A	PG. 1008	3									
AN176-11A	182 -101	4									
	183 - 99										
AN176-12A	176 - 42	2									
AN176-14A		2									
AN176-15A	176 - 35	2									
AN176-17	182 - 56	2									
	183 - 56										
	358										
AN176-17A		1									
AN176-20A	182 - 66	4									
	183 - 85										
AN176-24A	182 - 89	4									
	183 - 86										
AN176-52A		1									
AN176-53A	205 - 70	1									
AN176-74A	182 - 92	8									
	183 - 91										
AN176C10		1							R	5306-639-2420	G1AN
AN177-10A	16	2									
AN177-12A	16	4									
AN177-17	143 - 8	2							R	5306-292-6153	G1AN
AN177-17A	143 - 12	2									
AN178-14A		2									
AN179-21	154 - 24	4							R	5306-165-0191	G190
	156 - 11										
	358										
AN179-23		2									
AN179-33	164 -102	2									
	357										
AN180-20A	141	1									
AN180-37	PG. 1013										
	PG. 1022										
	355 -154	1							R	5306-551-7598	G1AN
AN182-24A	90 - 1	2									
AN1921CUR		1									
AN200J53	36 - 29	2									
AN200KP4	80 - 27	8									
	179										
	188 - 19										
	198 -172										
AN200KP5		4									
AN200KP6	51 - 4	1		M		O					
AN200KS3	96	8									
AN200KS3L	181 - 30	1		M		O					
	182										
AN200KS4	81 - 2	18									
	131 - 48										
	131 - 51										
	155 - 22										
	174 - 6										
	175 - 31										
	179 - 21										
	179 - 23										
	179 - 24										
	180										
	184 -134	1									
AN200KS5	91	4									

PART NUMBER	FIGURE AND INDEX	TOTAL QTY.	MICRO-FRM NUMBER	MAINTENANCE CODE DATA: SOURCE CODE	INST'L CAPABILITY	PRE-INST'L CAPABILITY	RECOVERABILITY	SUPPORT EQUIPMENT	FEDERAL STOCK NUMBER DATA: COGNIZANCE CODE	FEDERAL STOCK NUMBER	MFG. CODE (TSMC)
	92 - 8										
	180 - 86										
	180 -120										
AN200KS6	91 - 49	2									
	194										
AN200K3L	51 - 52	9									
	163										
	195 - 23										
	204 - 42										
AN201KD4A	201 - 10	2									
AN201KP10A	179 - 18	2									
AN201KP12A	191 - 8	10									
	191 - 16										
	191 - 30										
	191 - 45										
	192 - 8										
	192 - 19										
AN201KP3A	19 - 67	20									
	190 - 14										
	191 - 57										
	191 - 67										
	192 - 38										
	192 - 46										
	197										
	198 - 76										
AN201KP4		2									
AN201KP4A	83 - 5	33									
	92										
	155 - 10										
	174 - 76										
	175 - 67										
	175 - 93										
	176 - 8										
	176 - 29										
	179 - 20										
	180										
	164 -132	2									
AN201KP5A	189 - 22	2									
	189 -100										
AN201KP6A	175 - 94	2									
AN201KP8A	128 - 95	7									
	128 -103										
	131 - 60										
	138 - 48										
	155 - 26										
AN201K4A	189 - 95	2									
AN206DSP3		1									
AN206DSP4	180 - 48	2									
	191 - 15										
AN206DSP5	87	4									
AN207DPP4	175 - 33	1									
AN207DP3	195	1									
AN207DP4	180 - 12	1									
AN207DP4A	180	1									
AN207D4		1									
AN210-1B	180	3							R	3020	
	196 - 56										
	196 - 59										
	196 - 65										
	197 - 24										
	198 - 19										
	200										
AN210-2B	195	8							R	3020-293-4019	
	197 - 6										
	197 - 9										
	198 - 5										
	198 - 8										
	204										
AN210-4B	184 -114	1									
	186 - 27										
	186 - 36										
AN214-2	200 - 99	1									
AN218P4		1		M		O					
AN219-2	182 - 2	43							R	3020-287-7919	X110
	183 - 2										
	184 - 70	1									
	188 - 28										
	195	1									
	196 - 54										
	196 - 71										
	196 - 96										
	196 -102										
	197 - 13										
AN219-2A	182 - 5	2									
	358										
AN219-4	86 - 26	26									
	86 - 35										
	181 - 10										
	195										
	197 - 36										
	198 - 31										
	200										
	201 - 23										
	203										
	204 - 25										
AN219-4A	86 - 39	5							R	3020-287-9661	X110
	182 - 6										
	182 - 7										
	183 - 5										
	183 - 6										
	358										
AN219A2	197 - 52	6		M		O			R	1600-C04-5140	X110
	197 - 59										
	197 - 67										
	197 - 70										

PART NUMBER	FIGURE AND INDEX	TOTAL QTY.	MICRO-FILM NUMBER	MAINTENANCE CODE DATA: SOURCE CODE	INSTL CAPABILITY	PRE-INSTL CAPABILITY	RECOVERABILITY	SUPPORT EQUIPMENT	FEDERAL STOCK NUMBER DATA: COGNIZANCE CODE	FEDERAL STOCK NUMBER	MFG. CODE (TSMC)
	198 - 47										
	198 - 54										
	198 - 62										
	198 - 65										
AN219A4	86 - 48	2		P1					R	9020-287-9661	X110
	86 - 52										
	197 - 53										
	198 - 48										
AN220-1	188 - 5	2		M		O					
	189 - 2										
AN220-2	184	4									
	185 - 42										
	185 - 46										
	185 - 79										
AN220-2A	188 - 45	1									
	189 - 7										
AN220-3A	188 - 45	1							R	5020-528-5036	X110
	189 - 6										
	358										
AN220A2		1									
AN220A3		1							R	5020-528-5036	X110
AN220A4	362 - 5	1									
	362 - 7										
AN220SW428		2									
AN227-155	PG. 1004	2									
AN227-16	PG. 1004	2									
AN227-195	PG. 1004	2									
AN227-20	PG. 1004	2									
AN227-23L		4							R	5325-276-7784	
AN227-6	PG. 1003	2									
AN227-7	PG. 1003	2									
AN227-8	PG. 1004	2									
AN227-9	PG. 1004	2									
AN229-4BL357	PG. 1004	1									
AN23-10	30 - 63	4							R	5306-151-1962	G1AN
	58 - 27										
	58 - 96										
	58 -114										
	58 -142										
	63 - 3										
	200 -122										
	200 -125										
AN23-10A	195 - 16	1							R	5306-150-9906	G1AN
AN23-11	57 - 30	6							R	5306-151-1963	G1AN
	57 - 34										
	59A- 49										
	196 - 50										
	200 - 29										
AN23-11A	194 - 15	4							R	5306-150-9907	G1AN
	194 - 18										
	195										
AN23-12	41 - 11	4							R	5306-151-1964	G1AN
	55 - 24										
	58 -121										
	59A- 17										
	62 - 9										
	199 - 40										
	200 -109										
AN23-12A	316 - 58	2							R	5306-150-9908	G1AN
AN23-13	65 - 25	5							R	5306-151-1965	G1AN
	86 - 58										
	225 - 5										
	225 - 34										
	259 -142										
AN23-13A	45 -100	5							R	5306-150-9909	G1AN
	51 - 50										
	195 - 88										
AN23-14	19 - 53	13							R	5306-151-1966	G1AN
	30 - 59										
	86 - 61										
	184 - 32	1									
	184 - 39	1									
	185 - 27										
	195 - 69										
	259 -148										
AN23-14A	45 - 61	2							R	5306-150-9910	G1AN
	45 - 98										
AN23-15	19 - 74	6							R	5306-151-1967	G1AN
	83 - 46										
AN23-15A	12 - 69	2							R	5306-150-9911	G1AN
	45 -129										
	196 - 57										
AN23-16		6							R	5306-151-1968	G1AN
AN23-16A	195	2							R	5306-150-9912	G1AN
AN23-17	200 -132	2							R	5306-151-1969	G1AN
AN23-18	59A- 55	4							R	5306-151-1970	G1AN
	83 - 18	1									
	204 - 19										
AN23-19	58 -110	1									
AN23-19A	19 - 79	6							R	5306-150-9915	G1AN
	195 - 28										
	195 - 32										
	195 - 69										
AN23-20	200 -112	1							R	5306-151-1972	G1AN
AN23-20A	195 - 20	2							R	5306-150-9916	G1AN
AN23-21	193 - 4	2							R	5306-151-1973	G1AN
	203 - 14										
AN23-22	83 - 65	3							R	5306-151-2301	G1AN
AN23-25	119	1									
AN23-25A	190 - 12	3							R	5306-156-2527	G1AN
	316 - 21										
AN23-27A	45 - 90	7							R	5305-156-2400	G1AN
	56 - 52										
	60 - 25										
	67 - 3										

PART NUMBER	FIGURE AND INDEX	TOTAL QTY.	MICRO-FILM NUMBER	MAINTENANCE CODE DATA: SOURCE CODE	INSTL CAPABILITY	PRE-INSTL CAPABILITY	RECOVERABILITY	SUPPORT EQUIPMENT	FEDERAL STOCK NUMBER DATA: COGNIZANCE CODE	FEDERAL STOCK NUMBER	MFG. CODE (TSMC)
AN23-30	19 - 71	6							R	5306-151-2309	G1AN
AN23-32	187 - 5	3							R	5306-151-2311	G1AN
AN23-48	58 -126	1							R	5306-151-2395	G1AN
AN23-60		1							R	4730-186-9950	G250
AN23-8	199 - 24	6							R	5306-151-1960	G1AN
	199 - 29										
AN23-9	56 - 24	12							R	5306-151-1961	G1AN
	56 - 43										
	59A- 91										
	63 - 18										
	196 - 79										
	199 - 20										
AN230A10	113	53									
AN230B51	PG. 1004	2									
AN230B10	58 - 44	20									
	58 -164										
	58 -172										
	63 - 43										
	63 - 52										
	63 - 55										
AN230B20	55	9									
	57										
	57A										
AN230W820	55	9									
	57										
	57A										
AN24-10	55	2							R	5305-156-2694	G1AN
AN24-11	11 - 4	2							R	5306-156-2695	G1AN
AN24-12		1							R	5306-156-2696	G1AN
AN24-13	186 - 74	2							R	5306-156-2697	G1AN
AN24-13A	259 -210	4							R	5305-174-3968	G1AN
	260 - 21										
	316 - 46										
AN24-14	19 - 60	3							R	5306-156-2698	G1AN
AN24-14A	45 -120	7							R	5306-156-2283	G1AN
	45 -138										
	57										
	259 -113										
	259 -131										
AN24-15	30 - 4	8							R	5306-156-2699	G1AN
	195										
	316 - 8										
AN24-15A	45 -132	2							R	5306-156-2284	G1AN
	45 -157										
AN24-16	19 - 45	4							R	5306-156-2700	G1AN
	191 - 70										
	192 - 49										
	200 -117										
AN24-16A	143	2							R	5306-156-2285	G1AN
AN24-17	11 - 3	6							R	5306-156-2701	G1AN
	56 - 56										
	60 - 29										
AN24-17A		2							R	5306-156-2286	G1AN
AN24-18	68 - 40	3							R	5306-156-2702	G1AN
	75										
AN24-18A		1							R	5306-156-2287	G1AN
AN24-19A	195	2							R	5306-156-2288	G1AN
AN24-22A	65 - 45	1									
AN24-23	203 - 37	1							R	5306-151-0525	G1AN
AN24-24	30 - 67	4							R	5306-151-0526	G1AN
	55	1									
	56 - 3										
	75 - 27										
AN24-27	43 - 70	2							R	5306-151-0529	G1AN
AN24-30	316 - 71	2							R	5306-151-0532	G1AN
AN24-31	71 - 58	4							R	5306-151-0533	G1AN
AN24-32	187 - 13	2							R	5300-C00-0527	G1AN
AN24-32A	48 - 61	12							R	5306-156-2391	G1AN
AN24-34	25 - 7	6							R	5300-C00-0928	G1AN
AN24-34A	66 - 57	1									
AN24-36	25 - 10	2							R	5306-151-0536	G1AN
AN24-46A		2							R	5306-156-2295	G1AN
AN24-48A		2							R	5306-156-2296	G1AN
AN24-54A	26 - 38	2							R	5306-151-0007	G1AN
AN24-8	335 - 96	2									
	349 - 78	4									
AN240-5	PG. 1004	1									
AN25-13	56 - 29	2							R	5306-144-3849	G1AN
AN25-15	55 - 19	6							R	5306-144-3851	G1AN
	57 - 19										
	58 -106										
	141 - 40										
AN25-19	141 - 37	2							R	5306-144-3855	G1AN
AN25-21	259 -152	2							R	5306-144-3851	G1AN
AN25-22	56 - 5	1									
AN25-24	25 - 31	1							R	5306-144-3860	G1AN
AN25-30		2							R	5306-144-3866	G1AN
AN25-31	316 - 95	1									
AN253-1-125		3									
AN253-1-150	334 - 72	2									
	334 -173										
AN253-1-67	199 - 2	3									
AN253-1-7625	334 -185	2									
	334 -195										
AN253-12-156	340	1									
AN253-2-1000	44 - 49	4									
	44 - 59										
AN253-2-11.875		1									
AN253-2-1125	71	1									
AN253-2-1187	362	1									
AN253-2-13375	334 -100	1									
AN253-2-1400	9 - 8	1									
AN253-2-1450	61 - 74	2									
	335 - 25	1									
AN253-2-156		1									

PART NUMBER	FIGURE AND INDEX	TOTAL QTY.	MICRO-FILM NUMBER	MAINTENANCE CODE DATA: SOURCE CODE	INST'L CAPABILITY	PRE-INST'L CAPABILITY	RECOVERABILITY	SUPPORT EQUIPMENT	FEDERAL STOCK NUMBER DATA: COGNIZANCE CODE	FEDERAL STOCK NUMBER	MFG. CODE (TSMC)
AN253-2-1562	334	1									
AN253-2-1543	334 -194	1									
AN253-2-1662		2									
AN253-2-178	334	1									
AN253-2-200	44 - 27	2									
	334										
AN253-2-2064	349 - 15	1									
AN253-2-2219	334	1									
AN253-2-240	331 - 38	5									
AN253-2-243	331 - 41	4									
AN253-2-2438	334	1									
AN253-2-287	334	1									
AN253-2-325	334 - 47	1									
AN253-2-356		2									
AN253-2-381	334 -136	1									
AN253-2-413		2									
AN253-2-425	349	1									
	349	1									
	349	1									
AN253-2-440	334 -140	1									
AN253-2-460	47 - 43	1									
AN253-2-4875	74	1									
AN253-2-500	347	8									
	348										
AN253-2-550	335 - 60	1									
AN253-2-594	349 - 17	1									
AN253-2-675		2									
AN253-2-696	334 -128	1									
AN253-2-700	39 - 82	1									
AN253-2-825	349 - 16	1									
AN253-2-9.25	333	1									
AN253-2-938	78 - 80	2									
AN253-2-968	71 - 44	1									
AN253-2-975	335	1									
AN253-3-062	195 - 2	2									
AN253-3-128	187 - 18	2									
AN253-3-150	179	2									
AN253-3-693	331 - 37	1									
AN253-4-128	187 - 16	2									
AN253-4-137	361 - 26	1									
AN253-4-2444	42 - 4	1									
AN253-4-400		1									
AN253-4-406	193 - 11	1									
AN253-4-761	39 - 74	1									
AN253-4-763	39	1									
AN2552-3A	234 - 1	1							R	5935-204-8827	D336
	235 - 1										
AN257HYC4-950	72 - R2	2									
AN265-1032		6									
AN2690-8	136	2									
AN2691-4	154	1									
AN271812	184 - 49	1									
AN27188	PG. 1010	1									
AN3-10	59 - 46	1							R	5306-144-3649	G1AN
AN3-10A	12 - 5	51							R	5306-151-0784	G1AN
	58										
	64 - 84										
	64 - 95										
	75 - 30										
	83 - 72										
	95 -137										
	97 -138										
	112 - 8										
	141										
	172 - 38	3									
AN3-11		2							R	5305-144-3650	G1AN
AN3-11A	12 - 56	38							R	5306-151-0783	G1AN
	36 - 2										
	36 - 26										
	54 - 62										
	65 - 7										
	71 - 69										
	94 - 41										
	112 - 38										
	113 - 12										
	196 - 16										
	204										
	333 - 93										
	355										
AN3-12		3							R	5306-144-3651	G1AN
AN3-12A	11 - 16	36							R	5306-51 -0782	G1AN
	93										
	124										
	126										
	127										
	193 - 84										
	195 - 91										
	196 - 21										
	205 - 96	1									
	259 -176										
	355										
AN3-13	54 - 16	2							R	5306-144-3652	G1AN
	195										
AN3-13A	11 - 18	9							R	5306-151-0781	G1AN
	54 - 35										
	54 - 55										
	54 - 67										
	75 - 15										
	78 - 25										
	193 - 28										
	197 - 10										
	198 - 9										
	200 - 75										
	205 - 21										
	205 - 21	3									

PART NUMBER	FIGURE AND INDEX	TOTAL QTY.	MICRO-FILM NUMBER	MAINTENANCE CODE DATA: SOURCE CODE	INST'L CAPABILITY	PRE-INST'L CAPABILITY	RECOVERABILITY	SUPPORT EQUIPMENT	FEDERAL STOCK NUMBER DATA: COGNIZANCE CODE	FEDERAL STOCK NUMBER	MFG. CODE (TSMC)
AN3-14	44	4							R	5306-144-3653	G1AN
AN3-14A	PG. 1005										
	51 - 30	9							R	5306-151-0780	G1AN
	63 - 32										
	66 - 30										
	93										
	139 - 1										
	141										
	205 - 21										
	253										
	323										
AN3-15A	PG. 1019										
	PG. 1026										
	153 - 6	12							R	5306-151-0779	G1AN
	154										
	259 - 26										
	259 - 95										
	259 - 58										
	259 - 63										
	259 -117										
	259 -136										
	355										
AN3-16	164	4							R	5306-144-3655	G1AN
	183 - 73										
AN3-16A	34 - 28	43							R	5306-151-0778	G1AN
	64 - 57										
	134										
	135										
	153										
	154										
	158	2									
	159										
	162										
	184										
	204 - 41										
	349 - 64	2									
AN3-17	PG. 1006	2									
AN3-17A	34 - 7	21							R	5306-151-0777	G1AN
	67 - 13										
	93 - 74										
	126										
	127										
	164										
	165 - 55										
	182 - 63										
	183 - 64										
	186 - 31										
	259 -199										
	260										
	321										
AN3-20A	41 - 57	16							R	5306-151-0776	G1AN
	78 - 75										
	94										
	96										
	101										
	102										
	103										
	124										
	187 - 9										
	331 - 6										
AN3-21	259 -214	4							R	5306-144-3658	G1AN
	316 - 4										
AN3-21A	134	6							R	5306-151-0775	G1AN
	135										
	136										
	321										
AN3-22A	123	12							R	5306-151-0774	G1AN
	124										
	126 - 56										
	127 - 52										
	134										
	135										
	150										
	153										
	154										
	158	2									
	159										
	225 - 13										
AN3-23	PG. 1010	1									
AN3-23A	94	27							R	5306-180-1948	G1AN
	164										
	165										
	170 - 2										
	225 - 48										
	225 - 65										
	259 - 11										
	259 - 87										
AN3-24A	35 - 35	8							R	5306-150-9881	G1AN
	198 - 74										
	259 -164										
	321										
	322										
AN3-25A	16 -124	6							R	5306-150-9874	G1AN
	42 - 56										
	198 -105										
	225 - 18										
	225 - 53										
	259 - 44										
	259 - 90										
	259 -256										
	311 - 10										
	311 - 41										
	312 - 9										
	316 - 54										
AN3-3	173 - 84	1									

PART NUMBER	FIGURE AND INDEX	TOTAL QTY.	MICRO-FILM NUMBER	MAINTENANCE CODE DATA: SOURCE CODE	INSTL CAPABILITY	PRE-INSTL CAPABILITY	RECOVERABILITY	SUPPORT EQUIPMENT	FEDERAL STOCK NUMBER DATA: COGNIZANCE CODE	FEDERAL STOCK NUMBER	MFG. CODE (TSMC)
AN3-3A	37	20							R	5306-150-9221	G1AN
	53 - 47										
	72 - 35										
	103 - 66										
	150										
	173 - 16										
	173 - 40										
	221 - 28										
	221 - 39										
	255 - 19										
	279										
	295 - 32										
	295 - 43										
	314 - 65										
	319 - 55										
	349 - 51	2									
	349 - 79	2									
AN3-31A	316 - 55	1							R	5306-150-9878	G1AN
AN3-33A	55 - 37	5							R	5306-150-9880	G1AN
	57 - 59										
	57A- 21										
	123										
	125										
	225 - 15										
AN3-35A		2							R	5306-151-2153	G1AN
AN3-36A	241 - 31	2									
	241 - 52	1									
	241 - 70	1									
AN3-4	95	10							R	5306-144-3646	G1AN
	119										
	255 - 16										
	349 - 35	1									
AN3-4A	10 - 57	127							R	5305-151-0788	G1AN
	39 - 31	127							R	5305-151-0788	G1AN
	39 - 36										
	39 - 61										
	41 - 25										
	44 -134										
	52 - 56										
	53 - 46										
	72 - 36										
	72 - 37										
	96 - 58										
	98										
	100										
	264 - 61										
	264 - 70										
	269										
AN3-46A	241 - 53	1									
AN3-5	58 -157	16							R	5306-144-3645	G1AN
	86 - 3										
	86 - 6										
	86 - 10										
AN3-5A	12 - 6	30							R	5306-151-0787	G1AN
	12 - 7										
	12 - 8										
	13 - 39										
	13 -103										
	33 - 7										
	37										
	39 - 29										
	39 - 30										
	39 - 37										
	43 - 92										
	184 - 62	2									
AN3-6	59A- 9	8							R	5306-144-3647	G1AN
	205 - 38										
	219 - 24										
AN3-6A	13 - 26	121							R	5306-151-0786	G1AN
	21 - 95										
	21 - 98										
	21 -116										
	35 - 3										
	36 - 5										
	36 - 9										
	38 - 32										
	38 - 40										
	39 - 34										
	43 - 93										
	125										
	172 - 47	1									
	172 - 55	4									
	184 -143	4									
	334										
AN3-7	54 - 44	8							R	5306-144-3648	G1AN
	54 - 51										
	59 - 59										
	195 - 97										
	195 -112										
	197 - 25										
	198 - 20										
AN3-7A	21 -121	73							R	5306-050-0785	G1AN
	36 - 11										
	38 - 39										
	39 - 18										
	43 - 94										
	44 -125										
	47 - 35										
	51 - 20										
	54 - 63										
	60 - 6										
	172 - 37	1									
	172 - 48	1									
	184 -150	4									
	337 - 10	2									

PART NUMBER	FIGURE AND INDEX	TOTAL QTY.	MICRO-FILM NUMBER	MAINTENANCE CODE DATA: SOURCE CODE	INSTL CAPABILITY	PRE-INSTL CAPABILITY	RECOVERABILITY	SUPPORT EQUIPMENT	FEDERAL STOCK NUMBER DATA: COGNIZANCE CODE	FEDERAL STOCK NUMBER	MFG. CODE (TSMC)
AN3-9A		4									
AN3H-4A		6									
AN3H11A		4							R	5306-182-2062	G1AN
AN3H12A	149 - 14	4							R	5306-182-2069	G1AN
AN3H14A	53 - 63	1							R	5306-182-2005	G1AN
AN3H3A	89	32							R	5306-182-2056	G1AN
	95 - 89										
	96 - 22										
	97 - 92										
	101 -109										
	102 - 85										
	102 -112										
	103 - 74										
	103 -121										
	337 - 27	4									
AN3H4A	98 - 37	6							R	5306-182-2057	G1AN
	99 - 42										
	99 - 64										
	100 -145										
	101 - 77										
	102 - 53										
	103 - 35										
	178 - 4										
	194 - 28										
	328 - 54										
	335 - 72	2									
	335 - 78	4									
AN3H5A	13 - 37	8							R	5306-182-2058	G1AN
	13 -101										
	95 -102										
	95 -111										
	97 -104										
	97 -112										
	121 - 32										
	193 - 63										
	328 - 58										
	358										
AN3H6A	13 - 28	12							R	5306-182-2059	G1AN
	55										
	57 - 25										
	95 -101										
	95 -139										
	97 -103										
	97 -140										
	110 - 22										
	196										
AN301KP4A	198 -141	2									
AN3017-6		1									
AN3021-1	256 - 5	2							R	5930-232-6528	D334
	278 - 3										
	305 - 12										
	306 - 16										
AN3021-2	256 - 7	3							R	5930-642-9227	D334
	275 - 6										
	279 - 34	1									
	300 - 23										
	301 - 18										
	305 - 9										
	305 - 10										
	306 - 13										
	306 - 14										
AN3021-3	267 - 2	6		P1	F	O	C		R	5930-548-5130	D334
	271 - 9										
	288										
	293 - 20										
	300 - 20										
	301 - 15										
AN3021-5	278	1							R	5930-548-9699	D334
AN3021-6	230 - 7	1							R	5930-108-4218	D334
AN3021-7	236	1							R	5930-231-1518	DANN
	272 - 2										
	284 - 69										
AN3022-1		1							R	5930-513-3107	D334
AN3022-11	251 - 16	2							R	5930-513-3109	D334
	299 - 20										
AN3022-2	251 - 1	4							R	5930-501-3906	D334
	256 - 6										
	264 - 75	1									
	305 - 11										
	306 - 15										
	315 - 15										
	318 - 10										
AN3022-3	292 - 7	4							R	5930-501-3905	D344
AN3022-6	284 - 61	1							R	5930-642-9670	D334
AN3022-7	236 - 9	1							R	5930-224-5096	D334
	249 - 6										
AN3025-2	234 - 53	2							R	5945-474-4111	Z150
	235 - 52										
	279 - 23										
	297 - 20										
	298 - 11										
AN3027-1		2							R	5930-228-2946	D334
AN3027-11	279	1									
	306 - 9										
AN3027-2	251 - 6	3							R	5930-237-6947	D334
	315 - 18										
	318 - 13										
AN3027-3	208 - 15	3							R	5930-231-1513	D334
	220 - 4										
	224 - 22										
	227 - 38										
	231										
	236 - 10										
	237 - 3										
	241 - 60	1									

Part Number	Figure and Index	Total Qty.	Micro-film Number	Source Code	Instl Capability	Pre-Instl Capability	Recoverability	Support Equipment	Cognizance Code	Federal Stock Number	Mfg. Code (TSMC)
	249										
	250 - 10										
	282 - 17										
AN3027-6	229 - 17	2							R	5900-C00-8872	D334
	236 - 8										
	242 - 2										
	254 - 4										
	299 - 24										
	315 - 12										
	318 - 7										
AN3027-7	218 - 11	3							R	5930-501-3894	D334
	220 - 3										
	224 - 6										
	229										
	236										
	237 - 2										
	246										
	250 - 9										
	270										
	271										
	287A- 34										
AN3027-8	231	7							R	5930-112-5209	D334
	247										
	257 - 4										
	305 - 6										
	305 - 7										
	306 - 10										
	306 - 11										
	315 - 20										
	318 - 15										
AN3028-3		1							R	5930-243-4283	D334
AN304-1032		1									
AN305-632		2									
AN3050-6		2							R	5975-250-6328	D334
AN3050-8		2							R	5975-501-4616	D334
AN3054-10		1							R	5975-497-2331	D334
AN3054-12		6							R	5975-497-2332	D334
AN3057-10A		1									
AN3057-12		1							R	5935-380-2352	D334
AN3057-12A		1									
AN3057-16A		1							R	5935-223-0576	D334
AN3057-4A		4							R	5995-240-0173	D334
AN3057-8		2							R	5935-258-0604	D334
AN3057-8A		1		P1					R	5935-252-2739	D334
AN3058-12		3							R	5975-284-9253	D334
AN3066-12		3							R	5975-497-2313	D334
AN308-2-2		2									
AN31L-4R	200	1									
AN310-10	PG. 1013										
	PG. 1022										
	355 -150	2							R	5310-167-1291	G1AN
AN310-12	122	4							R	5310-167-1292	G1AN
	123										
	125										
AN310-3	33	21							R	5310-167-1284	G1AN
	44										
	55										
	56 - 21										
	56 - 41										
	57 - 27										
	57 - 31										
	58 -140										
	58 -154										
	59A- 28										
	63										
	184 - 37	1									
	196										
AN310-4	33	21							R	5310-167-1285	G1AN
	54 - 23										
	56										
	60										
	163										
	172	1									
	172	1									
	172 - 20	1									
	172 - 31	1									
	172 - 50	2									
	172 - 58	1									
	172 - 75	1									
	174 - 44										
	175 - 28										
	175 - 97										
	180 - 10										
AN310-5	52 - 18	9							R	5310-167-1286	G1AN
	182 -110										
	198 -114										
	200 - 55										
AN310-6	59A- 41	1									
	182 - 5										
	183 - 53										
	358										
AN310-7	64 -107	3							R	5310-167-1288	G1AN
	143 - 14										
AN310-9	PG. 1005										
	154	4							R	5310-167-1290	G1AN
	156 - 15										
	358										
AN310C4	329 - 3	8							R	5310-157-1280	G1AN
	329 - 22										
AN310C5	329 - 9	8							R	5310-167-1281	G1AN
	329 - 28										
AN3100-20-18S		2									
AN3100-28-12S		1									
AN3100-28-12SW		1									
AN3100-28-12SX		1									

Part Number	Figure and Index	Total Qty.	Micro-film Number	Source Code	Instl Capability	Pre-Instl Capability	Recoverability	Support Equipment	Cognizance Code	Federal Stock Number	Mfg. Code (TSMC)
AN3100-28-21S		1									
AN3100-32-7S		1									
AN3100A10SL4P		1									
AN3100A18-1P		2							R	5935-191-4649	
AN3100A20-18S		2							R	5935-259-2720	
AN3100A20-27S		3							R	5935-259-7522	
AN3100A23-12SW		1									
AN3100A24-28P		1							R	5935-259-2728	
AN3100A28-11S		1									
AN3100A28-12SW		1									
AN3100A28-15S		1							R	5935-257-9149	
AN3100A28-21S		1							R	5935	
AN3100C28-11P		1									
AN3100C28-11PW		1							R	5935-260-2423	
AN3100C28-12P		1									
AN3100C28-12PW		3									
AN3100C28-12PX		3									
AN3100C28-12PY		2									
AN3100C28-16P		1									
AN3100C28-16PW		1									
AN3100C28-16PY		1									
AN3100C28-21P		4									
AN3100C28-21PX		2							R	5935-258-9919	D336
AN3100C28-21S		1									
AN3100C32-6P		1									
AN3100C36-10P		1									
AN3100C36-7P		1							R	5935-500-7122	D336
AN3101A22-14S		2									
AN3101B-16S-1S		1									
AN3101E10SL-4P		1									
AN3102-10SL-3P		4									
AN3102-10SL-4P		1									
AN3102-14S-6S		1									
AN3102-18-1P	270 - 29	1							R	5935-193-3550	D336
AN3102-18-11S		1		P1							
AN3102-20-18S		1		P1							
AN3102-20-22P		1									
AN3102-22-14P		1									
AN3102-22-19S		3							R	5935-513-2847	D336
AN3102-22-4S		1									
AN3102-28-12S		1		P1							
AN3102-28-12SW		1		P1					R	5900-C00-8418	D336
AN3102-28-12SX		1		P1							
AN3102-28-21P		1									
AN3102-28-21S		1		P1							
AN3102-32/7S		1									
AN3102A-14S-5S		1									
AN3102A-14S-6P	269	1									
AN3102A-24-28P		1		P1							
AN3102A-28-21P	284	1									
AN3102A10SL3P	349 - 74	1									
AN3102A14S2S		1		P1					R	5935	
AN3102A14S5S		1							R	5935-230-1561	
AN3102A18-1P	270 - 61	1									
AN3102A18-1S		2		P1					R	5935-258-3885	
AN3102A20-22S		1		M		F					
AN3102A20-27P	336 - 17	1									
	349 - 79	1									
AN3102A20-27S		1							R	5935-149-3238	
AN3102A24-28P		1							R	5935-193-2929	
AN3102A28-11S		1		P1							
AN3102A28-15S		1		P1					R	5935	
AN3102A28-21S		2		P1					R	5900-C00-8417	D336
AN3102A36-9S		1									
AN3102C20-22P		1		P1					R	5935-549-9561	D336
AN3102C24-28P		2		P1							
AN3102C28-11P		1		P1					R	5935	
AN3102C28-11PW		1									
AN3102C28-11PX		1		P1					R	5935-642-0996	D336
AN3102C28-12P		2		P1					R	5935-201-4162	D336
AN3102C28-12PW		2		P1							
AN3102C28-12PX		4		P1							
AN3102C28-12PY		2		P1					R	5935-642-0995	D336
AN3102C28-16PW		1		P1							
AN3102C28-16PY		1		P1							
AN3102C28-21P		4		P1							
AN3102C28-21PX		2		P1					R	5935-502-4416	
AN3102C32-6P		1		P1					R	5935-549-8800	D336
AN3102C32-7S		1		P1					R	5935-665-7961	D336
AN3106-10SL-4S		1									
AN3106-28-21P	209 - 1	1									
AN3106A18-1S		1									
AN3106A24-28S		1							R	5935-201-5452	
AN3106A24-28SW		1							R	5935	
AN3106B10SL3S		1									
AN3106B10SL4S		1									
AN3106B16S1P		1									
AN3106B18-1P		1									
AN3106B18-1S		1									
AN3106B16S1P		1									
AN3106B18-1P		1									
AN3107-18-11S		1							R	5935-204-9505	
AN3107B10SL4S		1									
AN3108-10SL3S		1									
AN3108A10SL4S		1									
AN3108A24-5S		1									
AN3108A24-7S		1									
AN3108B20-27P		1							R	5935-262-9341	
AN3115-1		1							R	5935-201-8072	D336
AN3116-1		1									
AN3116-2		1							R	5935-201-6487	DANN
AN3117-1	117 - 25	2									
	349 - 24	1									
AN3121-319	203	20									
	213										

PART NUMBER	FIGURE AND INDEX	TOTAL QTY.	MICRO-FILM NUMBER	MAINTENANCE CODE DATA: SOURCE CODE	INSTL CAPABILITY	PRE-INSTL CAPABILITY	RECOVERABILITY	SUPPORT EQUIPMENT	FEDERAL STOCK NUMBER DATA: COGNIZANCE CODE	FEDERAL STOCK NUMBER	MFG. CODE (TSMC)
	225										
	229										
	234										
	235										
	242										
	245										
	247										
	256 - 40										
AN3124-307	241 - 11	1									
AN3124A	322	2									
AN3131-303	233	1									
	241 - 19	1									
	256										
AN3131-313		2									
AN3140-321	284A	2									
AN3140-327	213	6									
	233										
	256 - 36										
	259										
	260										
	264										
	278										
	289 - 6										
	284										
	286										
	318	1									
AN315-12	331 - 11	4									
AN315-3	12 - 24	10							R	5310-167-1343	G1AN
	38 - 22										
	65 - 67	3									
	67 - 33										
	266 - 22										
AN315-3L	195	1									
AN315-3R	12 - 26	23							R	5310-167-1343	G1AN
	12 - 37										
	13 -135										
	13 -145										
	45 - 65										
	91 - 36										
	98 -146										
	112										
	131 - 41										
	259 -145										
	316 - 60										
	338 - 47										
	339 - 80										
	342	1									
AN315-38	195 - 82	1									
AN315-4	264 - 67	4									
AN315-4R	64 - 90	2							P	5310-167-1344	G1AN
AN315-5R		2									
AN315-6D		2									
AN315-8R	PG. 1005	2									
AN315C3R	264 - 29	2									
	264 - 51	4									
	334 - 73										
	334 -174										
	334 -186										
	334 -196										
AN315C4R	264 - 22	6									
AN315C6	PG. 1008	3									
AN3151-1		1									
AN3151-2	234 - 19	1							R	6140-256-8336	D336
	235 - 19										
AN3156-3	234 - 38	2							R	6140-309-4375	
	235 - 38										
AN3156-8		2									
AN3157-2	203 - 6	2									
	213 - 29										
	225										
AN3157-6		2									
AN3157-7	229 - 9	1									
AN3158-1	241 - 6	1							P	6220-513-7570	D336
AN3158-1A	241 - 6	1									
AN3158-4		1							R	6220	
AN316-3R		1									
AN316-4	11 - 11	12									
	30 - 62										
	44 -114										
	83 - 15										
	83 - 49										
	260 - 13										
	278 - 19										
	335A- 23										
	350										
AN316-4R	25 - 15	42							P	5310-497-3803	G1AN
	35 - 45										
	35 - 56										
	41 - 38										
	45 - 43										
	45 - 74										
	65 - 55	1									
	67 - 25										
	69 - 12										
	75 - 48										
AN316-5	PG. 1016										
	PG. 1024										
	41 - 21	6									
	44										
	68 - 7										
	176 - 50										
	180										
	182 - 39										
	183 - 41										
	193 - 27										

PART NUMBER	FIGURE AND INDEX	TOTAL QTY.	MICRO-FILM NUMBER	MAINTENANCE CODE DATA: SOURCE CODE	INSTL CAPABILITY	PRE-INSTL CAPABILITY	RECOVERABILITY	SUPPORT EQUIPMENT	FEDERAL STOCK NUMBER DATA: COGNIZANCE CODE	FEDERAL STOCK NUMBER	MFG. CODE (TSMC)
	198 -175										
	204 - 64										
	204 - 65										
AN316-5R	45 -129	37							R	5310-285-1667	G1AN
	45 -143										
	64 - 12										
	64 - 30										
	65 - 26										
	66 - 23										
	67 - 2										
	67 - 22										
	78 - 57										
	163 -116										
	184 -127	1									
	347 - 12										
	348 - 17										
AN316-6	176 - 21	1									
	205 - 98										
AN316-6L	176 - 88	1									
AN316-6R	175 - 49	5							R	5310-167-1300	G1AN
	175 - 55										
	175 - 74										
	175 - 76										
	180										
	204 - 6										
AN316-7	63	4									
AN316-7L	176 -117	1									
AN316-7R	56 - 44	2							R	5310-167-1302	G1AN
	362										
	364 - 27										
AN316-8	PG. 1003										
	PG. 1015										
	PG. 1023										
	355 -157	3									
AN316-8R	51 - 54	2							R	5310-167-1304	G1AN
	205 - 7										
	362A- 10	1									
AN316-9	199 - 3	2									
AN316C4R	259 - 71	5									
	274 - 18										
	341 - 23										
AN316R6		1									
AN3160-10		1							R	5925-153-4507	D334
AN3160-5	235	8									
	251 - 2										
	291 - 3										
	315 - 16										
	315 - 17										
	318 - 11										
	318 - 12										
AN3161		1									
AN3161P10		7							R	5925-175-5209	D334
AN3161P15	235	3									
	282										
	301 - 25										
AN3161P20	234	6							R	5925-175-5212	D334
	235										
	243										
	244										
	300 - 28										
	300 - 29										
	301 - 40										
	301 - 41										
AN3161P25	226	2							R	5925-513-2383	D334
	281										
	302 - 17										
AN3161P35	234	2							R	5928-175-5222	D334
	235										
	243										
	244										
	300 - 30										
	300 - 32										
	301 - 42										
	301 - 43										
AN3161P36		1									
AN3161P5	234	7							R	5925-154-0370	D334
	235										
	262 - 1										
	278 - 1										
	300 - 42										
	301 - 28										
AN3167-1	278 - 22	1							R	5930-090-4164	D334
AN3168-2	230 - 9	1							R	5930-090-4141	D334
AN3178-1	315 - 42	2							R	5950-093-7494	D336
	315 - 42										
	318 - 34										
AN319-3		1									
AN3198-1		4		M		O			R	5325-174-2893	GH80
AN3198-4		2									
AN320- 4	172 - 78	1									
AN320-10	66 - 16	3							R	5310-176-8114	G1AN
	154										
AN320-12	26 - 11	2							R	5310-176-8115	G1AN
AN320-14	68 - 21	2							R	5310-176-8116	G1AN
	69 - 1										
AN320-16	2 - 14	2							R	5310-176-8117	G1AN
	366 - 22										
AN320-3	19 - 51	85							R	5310-176-8107	G1AN
	19 - 55										
	19 - 69										
	19 - 72										
	41										
	44										
	54 - 42										
	54 - 49										

PART NUMBER	FIGURE AND INDEX	TOTAL QTY.	MICRO-FILM NUMBER	MAINTENANCE CODE DATA: SOURCE CODE	INSTL CAPABILITY	PRE-INSTL CAPABILITY	RECOVERABILITY	SUPPORT EQUIPMENT	FEDERAL STOCK NUMBER DATA: CONTINUANCE CODE	FEDERAL STOCK NUMBER	MFG. CODE (TSMC)
	58 - 24										
	58 - 94										
	59A- 6										
	184 - 30	1									
AN320-4	11 - 1	59							R	5310-176-8108	G1AN
	19 - 43										
	19 - 58										
	25 - 2										
	33										
	43 - 73										
	47 - 3										
	55										
	56 - 1										
	59A- 2										
	66 - 37										
	172	1									
	172	1									
	172	1									
	172 - 2	1									
	172 - 6	1									
	172 - 16	1									
AN320-5	25 - 36	26							R	5310-176-8109	G1AN
	52 - 94										
	55										
	56 - 4										
	56 - 27										
	57										
	67 - 9										
	91 - 5										
	117 - 11										
	141 - 39										
AN320-6	27 - 27	11							R	5310-176-8110	G1AN
	119 - 43										
	144										
	182 -130										
	182 -148										
	193 - 72										
AN320-7	PG. 1006										
	26 - 16	4							R	5310-176-8111	G1AN
	45 - 21										
	51 - 1										
	138 - 2										
	176 - 58										
	183 -116										
AN320-8	68 - 28	9							R	5310-176-8112	G1AN
	89 - 36										
	122										
	123										
	125										
	182 -172										
	183 -179										
	362A- 31										
	364 - 47										
AN320-9	154	6							R	5310-176-8113	G1AN
	156 - 14										
	164										
	357										
	358										
AN320C3		1							R	5310-264-1240	G1AN
AN320C4	173 - 67	1									
AN320C5	178	4							R	5310-433-0989	G190
AN320C6	328 - 23	3							R	5310-269-6247	G190
	328 - 32										
	328 - 37										
AN320D14	26 - 50	2							R	5310-268-7301	G1AN
AN3210-1	230 - 11	1							R	5930-242-9970	D334
	291 - 12										
	295 - 25										
AN3223-1		12							R	5930-636-3598	D334
AN3224-2	296	8							R	5975-243-0156	D334
	300										
	301										
	305 - 15										
	306 - 19										
AN3225	272	1									
AN3225-1	290	2							R	5930-243-4285	D334
	299 - 21										
AN3226-3		1							R	5930-239-0405	D334
AN3227-1		1							R	5930-108-6749	D334
AN3227-2		1							R	5930-513-3090	D334
AN3227-3	246 - 5	3							R	5930-112-5129	D334
	249										
	250										
	279										
	300 - 21										
	301 - 16										
AN3227-5		1							R	5930-108-6718	D334
AN3227-7	249	1							R	5930-669-7558	D334
	250 - 6										
	299 - 23										
AN3229-1	300 - 14	1									
	301 - 9										
AN3230-2	238 - 2	1							R	5930-548-4326	D334
	300 - 15										
AN3234-1	213	1							R	5900-C00-8816	D334
	339 - 61										
AN3249-1	234	2							R	5935-299-7811	E212
	235										
	251 - 38										
	251 - 39										
	251 - 40										
	295 - 5										
AN3249-2	234	7							R	5935-257-7415	E212
	235										
	251 - 41										

PART NUMBER	FIGURE AND INDEX	TOTAL QTY.	MICRO-FILM NUMBER	MAINTENANCE CODE DATA: SOURCE CODE	INSTL CAPABILITY	PRE-INSTL CAPABILITY	RECOVERABILITY	SUPPORT EQUIPMENT	FEDERAL STOCK NUMBER DATA: CONTINUANCE CODE	FEDERAL STOCK NUMBER	MFG. CODE (TSMC)
	295 - 4										
AN925-1032	127	3									
AN3291-4		1									
AN330-3	200 -123	1									
AN3303-1	209 - 37	1							R	5945-232-3987	D334
	295 - 40										
AN3304-1	213 - 42	2							R	5945-501-6179	D334
	214 - 21										
AN3310-1	221 - 6	9							R	5945-232-3987	D334
	234										
	259 -264										
	259 -267										
	275 - 4										
	278 - 38										
	279 - 25										
	288 - 8										
	291 - 5										
AN3310-2	221 - 6	10		P1	F	0	C		R	5945-542-9702	D334
	235										
	251										
	259										
	275 - 4										
	278										
	279 - 25										
	281										
	282										
	288 - 8										
	291 - 5										
	295 - 38										
	295 - 39										
AN3311-1	218 - 10	9							R	5945-502-6642	D334
	227 - 5										
	227 - 6										
	227 - 7										
	227 - 8										
	227 - 9										
	227 - 10										
	227 - 11										
	227 - 12										
	227 - 13										
	243 - 18	1									
AN3311-2	122 - 16	39		P1	F	0	C		R	5945-522-4216	DANN
	209 - 42										
	212 - 14										
	218 - 10										
	220 - 9										
	220 - 10										
	222 - 13										
	226 - 9										
	228 - 18										
	229										
	247										
	251 - 44										
	314 - 71										
	319 - 62										
AN3312-1	213 - 11	3							R	5900-C00-8571	D334
	279 - 24										
	297 - 29										
	298 - 4										
	307 - 8										
AN3312-2	297 - 29	2							R	5945-539-5376	DANN
	298 - 4										
AN3320-1	261 - 10	1							R	5945-238-9826	D334
	307 - 5										
AN3333-1	284 - 59	1									
AN3337-1	269 - 35	1									
	269A- 23	1									
AN335-4	234 - 39	1									
	235 - 39										
AN335-428		14									
AN3350-2	222 - 8	10							R	5945-257-0317	D334
	222 - 9										
	230 - 17										
	230 - 18										
	234										
	235										
	241 - 4										
	246										
	251										
	281 - 11										
	295 - 42										
AN3352-1	264 - 6	2							R	5945-250-8838	D334
AN3353-1	226 - 5	2							R	5945-180-8324	D334
	234 - 52										
	235 - 51										
	297 - 26										
	298 - 7										
AN3353-2		1							R	5945-302-2449	D334
AN3370-2	234 - 49	3							R	5945-232-5772	D334
	234 - 50										
	234 - 51										
	235 - 48										
	235 - 49										
	297 - 21										
	297 - 22										
	297 - 23										
	298 - 9										
	298 - 10										
AN3380-2	235 - 50	1							R	5945-500-7195	D334
	298 - 8										
AN340-8	221 - 32	2							R	5310-176-8133	G1AN
AN340-8	221 - 35	2							R	5310-176-8135	G1AN
	254 - 47	2									
AN341-10	297 - 7	3							R	5310-222-0672	G1AN
	298 - 15										

PART NUMBER	FIGURE AND INDEX	TOTAL QTY.	MICRO-FILM NUMBER	MAINTENANCE CODE DATA: SOURCE CODE	INST'L CAPABILITY	PRE-INST'L CAPABILITY	RECOVERABILITY	SUPPORT EQUIPMENT	FEDERAL STOCK NUMBER DATA: COGNIZANCE CODE	FEDERAL STOCK NUMBER	MFG. CODE (TSMC)
AN341-4	33 - 23	5									
AN341-416	210 - 15	2							R	4310-222-0676	G1AN
AN341-6	251 - 29	65							R	5310-222-0674	G1AN
	287										
	287A										
	357										
AN341-616	234 - 11	5							R	5310-222-0671	G1AN
	234 - 77										
	234 - 96										
	235 - 11										
	235 - 76										
	235 - 95										
	238 - 15										
	279 - 11										
	297 - 4										
	298 - 12										
AN341-632		15									
AN341-832		1									
AN3420-6		1		P1					R	5340-285-7703	D334
AN3432-6-14		2		P1					R	5305-206-4688	D334
AN3432-624-28		4									
AN3432-624-29		2							R	5306-638-3526	D336
AN3432-624-32	234 - 17	2							R	5306-558-8492	DANN
	235 - 17										
	279 - 17										
AN3433-2-2		13		M		F					
AN3433-2-3		2									
AN3433-2-6	318	1									
AN3434-1	240 - 16	108							R	5940-549-7691	D336
	287A										
	357										
AN3434-2	251 - 25	28							R	5940-272-2912	D336
AN3435-2-1		1									
AN3436-1-10		2									
AN3436-1-11		2									
AN3436-1-12		2									
AN3436-1-13		1		M		F					
AN3436-1-15		1									
AN3436-1-16		1		M		F					
AN3436-1-2	287 - 48	2		P1	M	O	N		R	5940-178-0137	D336
	287A- 56										
	357										
AN3436-1-3		1									
AN3436-1-4	251 - 26	4		M		O					
AN3436-1-5		3									
AN3436-1-6		2		M		F					
AN3436-1-7		1									
AN3436-2-1		5							R	5940-178-0137	D336
AN3436-2-11		2									
AN3436-2-12		4									
AN3436-2-13		2		P1							
AN3436-2-15		4									
AN3436-2-16		5									
AN3436-2-2		5									
AN3436-2-3		5									
AN3436-2-4		4									
AN3436-2-5		2									
AN3436-2-6		6									
AN3436-2-7		3									
AN3436-2-8		2		M		F					
AN3436-243		2									
AN3436-8		1									
AN3437-1-2		1									
AN345-10	259 -178	2							R	5310-176-8138	G1AN
AN345-416	54 - 20	3							R	5310-176-8140	G1AN
	54 - 46										
AN3456-1-2	357	1									
AN346-428	76 - 24	2									
AN350-1032	PG. 1009										
	PG. 1010										
	234 - 26	2							R	5310-146-8442	G1AN
	235 - 26										
AN350-4		2							R	5310-146-8442	G1AN
AN350-8	PG. 1010	1									
AN3600-02		1									
	10	1									
AN3600-2-048	201 - 8	3									
AN362C428	65	1									
AN363-032	100	24									
AN363-1032	PG. 1013										
	PG. 1022										
	14	18							R	5310-274-9365	G1AN
	89										
	112 - 10										
	113										
	355 -103										
	355 -112										
	357										
	358										
AN363-17	335A- 3	1									
AN363-426	188 - 46	6									
AN363-428	41	22							R	5310-274-9409	G1AN
	57										
	76 - 40										
	77										
	113 - 49										
	182 -104										
	182 -179										
	183 -102										
	189 - 10										
	204 - 57	1									
AN363-524	14	6							R	5310-274-9410	G1AN
	76 - 48										
	83 - 81										
	90 - 13										
	90 - 14										
	110 - 5										
	131 - 16										
AN363-6-1032		4									
AN363-624	14	6							R	5310-274-9407	G1AN
	182 - 84										
	182 - 87										
	182 - 90										
	182 - 99										
	183 - 83										
	183 - 86										
	183 - 89										
	183 - 97										
AN363-632	242	40							R	5310-274-8867	G1AN
	271 - 26										
	278 - 9										
	278 - 12										
	278 - 26										
	350 - 74										
AN363-720	14	8							R	5310-274-9364	G1AN
	15										
	16 - 39										
	16 - 41										
	85 - 13										
AN363-820	14	1									
AN363-832	74 - 33	4							R	5310-274-8866	G1AN
	270										
AN363-918	164	8							R	5310-274-9405	G1AN
	357										
AN363C-832		4									
AN363CN1032	274	4									
AN363C1032	6	51							R	5310-263-2862	G1AN
	50										
	52										
	55 - 31										
	57 - 53										
	57A- 24										
	74										
	98 - 5										
	171 - 75										
	172 -124	1									
	172 -129	1									
	172 -132	4									
AN363C424		2									
AN363C428	50	26							R	5310-497-3898	G1AN
	52 - 8										
	76 - 7										
	76 - 13										
	99 - 6										
	99 - 11										
	100 - 9										
	100 - 29										
	100 - 36										
	101 - 7										
AN363C524	329 - 14	24							R	5310-263-2863	G1AN
AN363C624		2							R	5310-275-2069	G1AN
AN363C632	274 - 3	4							R	5310-275-2070	G1AN
	274 - 6										
AN363C720	132 - 32	1							R	5310-266-4399	G1AN
AN363C832	209	8							R	5310-274-9404	G1AN
AN364-1016	141	1									
AN364-1018	19 - 18	4							R	5310-222-4253	G1AN
	84 - 85										
AN364-1032	5	135							R	5310-275-2027	G1AN
	6										
	10 -139										
	11 - 40										
	12 - 38										
	12 - 52										
	12 - 57										
	13 - 25										
	13 - 27										
	13 - 36										
	83 - 29										
AN364-1216	2 - 6	4							R	5310-274-9378	G1AN
	343 - 1										
	344 - 1										
	345 - 1										
	345A- 1										
	346 - 1										
	347 - 1										
AN364-1414	23	36							R	5310-275-2034	G1AN
	68 - 58										
	68 - 64										
AN364-1416		6									
AN364-1614		2							R	5310-274-8329	G1AN
AN364-1614C	113 - 21	6									
AN364-24		2									
AN364-320		1									
AN364-414		6									
AN364-428	6	160							R	5310-275-2026	G1AN
	12 - 93										
	13										
	16 -213										
	19 - 23										
	19 - 24										
	19 - 47										
	19 - 83										
	21 - 90										
	26 - 42										
	100 -177										
	333 - 89										
AN364-428C	104 - 16	4									
	105 - 25										
	358										

PART NUMBER	FIGURE AND INDEX	TOTAL QTY.	MICRO-FILM NUMBER	MAINTENANCE CODE DATA: SOURCE CODE	INST'L CAPABILITY	PRE-INST'L CAPABILITY	RECOVERABILITY	SUPPORT EQUIPMENT	FEDERAL STOCK NUMBER DATA: COGNIZANCE CODE	FEDERAL STOCK NUMBER	MFG. CODE (TSMC)
AN364-524	6	54							R	5310-274-9368	G1AN
	13 - 1										
	13 - 2										
	13 - 49										
	13 - 90										
	19 - 1										
	21 - 30										
	47 - 69										
	56 - 61										
	58 - 86										
AN364-524C	52 - 23	12									
AN364-6	175 - 88	1									
AN364-624	6	51							R	5310-275-2015	G1AN
	13 - 70										
	13 - 91										
	13 - 92										
	13 - 93										
	16 -181										
	16 -185										
	19 - 87										
	21 -140										
	24										
AN364-632	46 - 18	43							R	5310-275-2003	G1AN
	175										
	189 - 65										
	189 - 69										
	234 - 84										
	234 - 86	2									
	234 - 89										
	235 - 83										
	235 - 88										
	270 - 23										
	270 - 40										
	295 - 26										
AN364-634		1									
AN364-720	45 -119	10							R	5310-275-2011	G1AN
	45 -133										
	89										
	182 -162										
	183 -163										
	362 - 53										
AN364-720C	83 - 88	6							R	5310-275-2033	G1AN
AN364-820	2 - 10	17							R	5310-275-2042	G1AN
	13 - 59										
	13 -108										
	14										
	15										
	45 - 86										
	83 - 67										
	99 -101										
	100 -204										
	247										
AN364-832	10 -142	37							R	5310-274-9367	G1AN
	13 - 62										
	33 - 54										
	47 - 42										
	86 - 42										
	196 - 44										
	226										
	234 - 44										
	235 - 85										
AN364D1018	26 - 22	2							R	5310-275-2077	G1AN
AN364D1216		1							R	5310-275-2075	G1AN
AN364D1614	26 - 8	4							R	5310-274-9374	G1AN
	26 - 37										
AN364D720		1							R	5310-275-2058	G1AN
AN365-10	198 -103	4									
AN365-1015		2									
AN365-1018	362A	3							R	5310-266-4400	G1AN
AN365-1032	5	1162							R	5310-275-1994	G1AN
	6										
	9 - 11										
	10										
	11 - 13										
	12										
	13 - 13										
	13 -111										
	17 - 14										
	17 - 25										
	43 - 96										
	47 - 30										
	57A- 19										
	96 - 60										
	172	1									
	172	1									
	172	4									
	172 - 35	2									
	172 - 42	3									
	184 - 33	4									
	184 - 41	1									
	184 - 60	2									
	210 - 51	3									
	241 - 47	2									
	241 - 65	1									
	319 - 56	2									
	337 - 30	4									
	342	1									
	342	1									
	342	1									
	349 - 66	2									
AN365-1032C		1							R	5310-282-0512	G1AN
AN365-1216	334 -153	8									
AN365-128		2									
AN365-1414	23	8							R	5310-275-2060	G1AN
	68 - 67										

PART NUMBER	FIGURE AND INDEX	TOTAL QTY.	MICRO-FILM NUMBER	MAINTENANCE CODE DATA: SOURCE CODE	INST'L CAPABILITY	PRE-INST'L CAPABILITY	RECOVERABILITY	SUPPORT EQUIPMENT	FEDERAL STOCK NUMBER DATA: COGNIZANCE CODE	FEDERAL STOCK NUMBER	MFG. CODE (TSMC)
AN365-1812	91 - 19	2							R	5310-197-2286	G1AN
AN365-932		2									
AN365-35A	364 - 30	2									
AN365-4	175	1									
AN365-4-40NC	339 - 58	2									
AN365-4-40NC2		4									
AN365-416	17 - 20	2									
AN365-426	174	2									
AN365-428	6	730							R	5310-197-2279	G1AN
	11 - 35										
	12 - 70										
	12 - 72										
	12 - 74										
	13 - 7										
	14										
	16 -129										
	16 -132										
	16 -210										
	47 - 74										
	59A										
	65 - 31	1									
	65 - 34	1									
	184 - 26	1									
	184 - 44	1									
	184 - 57	4									
	184 - 71	1									
	184 - 74	1									
	184 - 89	2									
	184 - 92	3									
	184 -107	1									
	184 -111	1									
	184 -122	2									
	184 -128	1									
	282 - 11										
	340 - 10										
	347 - 52										
	348 - 47										
AN365-428C		4							R	5310-282-0511	G1AN
AN365-440	9 - 31	54							R	5310-197-2298	G1AN
	9 - 58										
	17										
	58 - 45										
	210										
	210 - 55	4									
	219 - 6										
	240 - 13										
	251 - 23										
	269 - 32										
	269A- 17	6									
	269A- 26	4									
	269A- 30	4									
	270 - 30										
	284A- 4										
	319	18									
	335	8									
	336	4									
AN365-48		1									
AN365-482		2									
AN365-516	79	3									
AN365-524	11 - 19	194							R	5310-274-8874	G1AN
	12 - 11										
	16 - 89										
	16 - 92										
	16 -100										
	16 -103										
	31 - 14										
	34										
	38 - 28										
	38 - 31										
	59A- 24										
	125										
	334										
	347 - 14										
	348 - 19										
AN365-524C		2									
AN365-624	6	53							R	5310-275-2087	G1AN
	11 - 31										
	16										
	17										
	45										
	47 - 54										
	64 - 34										
	64 - 58										
	64 - 70										
	66 - 51										
	333										
	334										
AN365-632	39	102							R	5310-274-8884	G1AN
	41 - 69										
	53 - 28										
	53 - 33										
	59 - 5										
	84 - 90										
	99										
	124										
	189 - 24										
	189 - 80										
	241 - 46	4									
	241 - 71	2									
	282 - 15										
	284A- 8										
	285A- 10										
	285A- 64										
	340										
AN365-6424		4									

PART NUMBER	FIGURE AND INDEX	TOTAL QTY.	MICRO-FILM NUMBER	MAINTENANCE CODE DATA: SOURCE CODE	INST'L CAPABILITY	PRE-INST'L CAPABILITY	RECOVERABILITY	SUPPORT EQUIPMENT	FEDERAL STOCK NUMBER DATA: COGNIZANCE CODE	FEDERAL STOCK NUMBER	MFG. CODE (TSMC)
AN365-720	6	16							R	5310-275-2089	G1AN
	7										
	78 - 16										
	78 - 52										
	116 - 32										
	362 - 27										
	364 - 21										
AN365-820	360 - 10	20									
	362 - 20										
	362 - 33										
	362A- 16										
	363 - 15										
	364 - 10										
	364 - 14										
	366 - 13										
	366 - 18										
	366 - 27										
	366 - 32										
AN365-832	6	178							R	5310-197-2284	G1AN
	13 - 32										
	13 - 44										
	15										
	18										
	33 - 26										
	36 - 24										
	44										
	47										
	203 - 45										
	269	16									
	269	16									
	269A- 21	6									
	269A- 48	4									
	286A- 9										
	319 - 63										
	335 - 36	5									
	349	2									
AN365-918	116 - 37	4							R	5310-266-4402	G1AN
	362A										
AN365B632	317	2							R	5310-266-4422	
	318										
AN365B832		4							R	5310-26 -4406	G1AN
AN365C10H5	203 - 3	1									
AN365D428A	26 - 65	2							R	5310-263-2860	G1AN
AN366-F428	6	1									
AN366F1032	35	10									
	71										
AN366F428	203	4							R	5310-497-3856	G1AN
AN366F524	31	62									
	42										
	44										
AN366F632		4									
AN373F1032	35	22									
	71										
AN380-C3-6	362A	2									
AN380-2-1		12									
AN380-2-2	PG. 1007										
	172	1									
	172	1									
	172	1									
	172	1									
	173										
	347										
AN380-2-3		1									
AN380-3-2		2									
AN380-3-3	PG. 1007	2									
AN380-3-4		1									
AN380-3-5		2									
AN380-4		1									
AN380-4-10		2									
AN380-4-6	358	4									
AN380C2-2	172	1									
	172	1									
	172	1									
	172	1									
	173										
AN380C2-3	358	2									
AN381-2-12		3							G	5315-234-1854	
AN381-3-12		1									
AN381-3-20		1							G	5315-241-7330	
AN381-3-3		1									
AN381-3-8	362A	1									
AN381-4-18		2									
AN381-4-24		1									
AN381-4-40		2									
AN385-824		4									
AN386-1-6A		2									
AN386-1-7A	194 - 10	2							P	5315-198-8093	GM80
AN386-2-11A	45 -107	4							P	5315-197-9181	GM80
	83 - 31										
AN386-2-8A	68 - 20	2							P	5315-197-3208	GM80
	75 - 63										
AN386-2-9A	45 -112	8							P	5315-197-3210	GM80
	45 -156										
AN386-4-22A	21	4									
AN391-41	48 - 74	1									
AN392-11	53 - 59	8							P	5315-235-1157	GM80
	338 - 45										
	338 - 56										
	339 - 83										
	339 - 99										
AN392-13	51 - 55	2							P	5315-235-1156	GM80
	278 - 15										
	341 - 4	1									
AN392-17	41 - 61	12							R	5315-235-1154	GM80
AN392-19	56 - 7	4									

PART NUMBER	FIGURE AND INDEX	TOTAL QTY.	MICRO-FILM NUMBER	MAINTENANCE CODE DATA: SOURCE CODE	INST'L CAPABILITY	PRE-INST'L CAPABILITY	RECOVERABILITY	SUPPORT EQUIPMENT	FEDERAL STOCK NUMBER DATA: COGNIZANCE CODE	FEDERAL STOCK NUMBER	MFG. CODE (TSMC)
AN392-21	2								R	5315-235-1152	GM80
AN392-23	45 - 53	1									
AN392-25	54 - 36	1							R	5315-235-1150	GM80
AN392-27	203 - 18	1							R	5315-235-1149	GM80
AN392-43	47 - 11	1							R	5315-235-1141	GM80
AN392-49	44 -119	4									
AN392-67	213 - 58	4							P	5315-224-7900	GM80
AN392-9	9 - 16	8							R	5315-235-1158	GM80
	338 - 54										
	339 - 92										
AN393-11	32 - 20	10							R	5315-235-1203	GM80
	35 - 77										
	54 - 17										
	58 - 7										
	58 -190										
	59 - 41										
	259 - 80										
	259 -103										
	259 -121										
	259 -193										
AN393-12	60 - 7	1									
AN393-13	34 - 22	39							R	5315-235-1202	GM80
	35 - 46										
	41 - 45										
	42 - 42										
	42 - 62										
	42 - 76										
	44 - 11										
	44 - 44										
	83 - 61										
	259 - 4										
	334										
	335 - 43	1									
AN393-15	64 - 1	3							R	5315-235-1201	GM80
	65 - 50	1									
	65 - 53	1									
	200 - 30										
	225 - 7										
	259 - 43										
AN393-17	44	3							R	5315-235-1200	GM80
	54 - 69										
	65 - 47	1									
AN393-19	25 - 28	5							R	5315-199-3790	GM80
	42 - 68										
	62 - 3										
	200										
	225 - 40										
AN393-21	25 - 21	4							R	5315-235-1224	GM80
AN393-23	42 - 71	1									
AN393-29	PG. 1016										
	PG. 1018										
	PG. 1024										
	204 - 20	6							R	5315-235-1199	GM80
	204 - 20	1									
	355 -188										
	355 -205										
AN393-31	62 - 20	2							R	5315-235-1187	GM80
AN393-33	35 - 31	20							R	5315-235-1188	GM80
	41 - 54										
	42 - 51										
	58 - 19										
AN393-35	219 - 29	1							R	5315-235-1189	GM80
AN393-41	347 - 5	4							R	5315-235-1239	GM80
	348 - 6										
AN393-49	34 - 13	6							R	5315-235-1235	GM80
AN393-55		2							R	5315-235-1232	GM80
AN393-57	41 - 48	6							R	5315-235-1231	GM80
AN393-69	35 - 37	3							P	5315-281-7361	GM80
AN393-7	42 - 47	6							R	5315-235-1204	GM80
	53 - 43										
	58 - 99										
AN393-81	18 -137	1							R	5315-597-8100	GM80
	357										
AN393-9	32 - 19	21							R	5315-235-1184	GM80
	35 - 75										
	42 - 21										
	62 - 5										
	185 - 64										
	259 - 50										
	259 -153										
	259 -243										
	260 - 10										
	260 - 17										
AN393D4		1									
AN394-11	83 - 53	4							R	5315-235-1190	GM80
AN394-15		2							R	5315-235-1182	GM80
AN394-17	12 - 29	5							R	5315-235-1181	GM80
	117 - 18										
	333 - 79										
	335A- 25										
AN394-19	34 - 33	3							R	5315-235-1180	GM80
	335A- 20										
AN394-21	12 - 19	6							R	5315-235-1179	GM80
AN394-23	61 - 25	1							R	5315-235-1178	GM80
AN394-25	30 - 75	2							R	5315-235-1177	GM80
	333 - 85										
AN394-27	30 - 2	2							R	5315-235-1176	GM80
AN394-29	62 - 2	2							R	5315-235-1175	GM80
	203 - 82										
AN394-39	12 - 49	4							R	5415-235-1193	GM80
AN394-47	43 - 29	2							R	5315-235-1216	GM80
AN394-69	117 - 12	1							R	5315-235-1220	GM80
AN394-77	12 - 46	2							R	5315-235-1197	GM80
AN394-79	PG. 1007	2									
AN395-17	122	2							R	5315-235-1242	GM80

PART NUMBER	FIGURE AND INDEX	TOTAL QTY.	MICRO-FILM NUMBER	MAINTENANCE CODE DATA: SOURCE CODE	INSTL CAPABILITY	PRE-INSTL CAPABILITY	RECOVERABILITY	SUPPORT EQUIPMENT	FEDERAL STOCK NUMBER DATA: COGNIZANCE CODE	FEDERAL STOCK NUMBER	MFG. CODE (TSMC)
	212										
AN395-21		2							R	5315-235-1244	GH80
AN395-416L		6									
AN395-428		2									
AN396-27	48 - 11	2							R	5315-245-4221	GH80
	362 - 24										
AN396-41	PG. 1010	1									
AN396-43	80 - 21	1									
AN396-57	80 - 12	1									
AN4-10	163	5							R	5306-144-3707	G1AN
	191 - 6										
	203										
AN4-10A	16 -215	203							R	5306-151-1426	G1AN
	21 -116										
	33 - 14										
	38 - 36										
	39 - 16										
	43										
	45 -162										
	50 - 49										
	59A										
	64 - 5										
	64 - 8										
	76 - 9										
	96 - 36										
AN4-11	68 - 34	2							R	5306-144-3708	G1AN
	197 - 14										
AN4-11A	25 - 64	157							R	5305-151-1423	G1AN
	33 - 4										
	38 - 23										
	50 - 54										
	68 - 12										
	76 - 9										
	76 - 15										
	78 - 42										
	80 - 17										
	86 - 38										
	96 - 15										
	96 - 26										
	184 - 73	1									
	184 - 79	1									
AN4-12	25 - 26	8							R	5306-144-3709	G1AN
	201 - 18										
	259 -249										
AN4-12A	12	42							R	5305-151-1422	G1AN
	43										
	45 - 2										
	51 - 60										
	83 - 56										
	107 - 36										
	108 - 29										
	150										
	183 -191										
	188 - 27										
	193 - 32	1									
	347 - 33										
	348 - 48										
AN4-13	186 - 70	6							R	5306-144-3710	G1AN
AN4-13A	12	27							R	5305-151-1421	G1AN
	38	1									
	43 - 4										
	43 - 66										
	44										
	46 - 21										
	58 - 53										
	59A										
	98 - 96										
	98 -106										
	99 -129										
	99 -136										
AN4-14		2							R	5306-151-2667	G1AN
AN4-14A	45 - 51	27							R	5305-151-1420	G1AN
	58 - 52										
	65 - 36	1									
	83 - 22										
	180 - 95										
	182										
	183										
	184 - 10										
	184 -113	1									
	196 - 55										
	347 - 34										
	348 - 49										
AN4-15	PG. 1005										
	191 - 27	8							R	5306-151-2666	G1AN
	191 - 50										
	192 - 5										
AN4-15A	107 - 22	13							R	5305-151-1419	G1AN
	180 -112										
	186 - 50										
	191 - 41										
	192 - 15										
	195										
	196										
	200 - 62										
	204										
	363 - 42										
AN4-16	192 - 29	13							R	5306-151-2665	G1AN
AN4-16A	43 - 79	15							R	5305-151-1418	G1AN
	43 - 80										
	56 - 32										
	64 - 65										
	144 - 37										
	180 - 69										
	180 -100										

PART NUMBER	FIGURE AND INDEX	TOTAL QTY.	MICRO-FILM NUMBER	MAINTENANCE CODE DATA: SOURCE CODE	INSTL CAPABILITY	PRE-INSTL CAPABILITY	RECOVERABILITY	SUPPORT EQUIPMENT	FEDERAL STOCK NUMBER DATA: COGNIZANCE CODE	FEDERAL STOCK NUMBER	MFG. CODE (TSMC)
	184 -109	1									
	185 - 73										
	197 - 37										
AN4-17	191 - 60	2							R	5306-151-1006	G1AN
	192 - 36										
AN4-17A	41 - 67	10							R	5306-151-1417	G1AN
	98 - 87										
	98 -113										
	99 -120										
	99 -141										
	100 -160										
	106 - 3										
	173										
	184 - 14										
	185 - 14										
AN4-20	83 - 8	1							R	5306-151-1005	G1AN
AN4-20A	2	12							R	5306-151-1416	G1AN
	68 - 46										
	78 - 67										
	105 - 20										
	182 - 76										
	183 - 75										
	191 - 64										
	192 - 43										
	358										
AN4-21		4									
AN4-21A	65 - 4	12							R	5305-151-1415	G1AN
	66 - 54										
	100										
	101 - 38										
	103 -168										
	116 - 90										
	164 - 82										
	165 - 75										
	193										
	196										
	366 - 8										
AN4-22	93 - 11	16							R	5306-151-1003	G1AN
	94 - 5										
	95 - 9										
	97 - 4										
AN4-22A	12	4							R	5306-151-1414	G1AN
	101 - 37										
	103 -167										
AN4-23	195	1							R	5306-151-1002	G1AN
AN4-23A	PG. 1003										
	PG. 1009										
	107 - 5	17							R	5306-151-1413	G1AN
	111 - 17										
	123										
	125										
	126										
	127										
	155										
	193 - 44										
AN4-24A	PG. 1003										
	PG. 1008										
	69 - 26	8							R	5306-151-1412	G1AN
	124										
	126										
	127										
AN4-25A	PG. 1007										
	69 - 7	6							R	5306-151-1411	G1AN
	126										
	127										
	196 - 97										
	316 - 36										
AN4-26	200	2							R	5306-151-1143	G1AN
AN4-27A	13 -141	8							R	5305-151-1409	G1AN
	13 -151										
	112 - 35										
AN4-30A	64 - 8	2							R	5305-151-1408	G1AN
	200 - 67										
AN4-31A	36 - 13	2							R	5306-151-1407	G1AN
AN4-32A	331	4							R	5305-151-1406	G1AN
AN4-33A		8							R	5306-151-1405	G1AN
AN4-34A	PG. 1006										
	155	1									
AN4-35A	200 -135	1							R	5305-151-1403	G1AN
AN4-37A	361 - 40	1							R	5305-150-9105	G1AN
AN4-4A	104 - 48	2									
	105 - 58										
	116										
	334 -145										
	355										
	358										
	PG. 1013										
	PG. 1022										
AN4-40A	111 - 27	1									
AN4-5		4							R	5306-144-3704	G1AN
AN4-5A	20 - 17	164							R	5306-151-1427	G1AN
	39 - 14										
	39 - 25										
	61 -115										
	93 - 7										
	93 - 25										
	94 - 18										
	94 - 28										
	95 - 4										
	95 - 23										
	96 - 18										
	96 - 46										
	96 - 54										
	100 -183										
	100 -197										

PART NUMBER	FIGURE AND INDEX	TOTAL QTY.	MICRO-FILM NUMBER	MAINTENANCE CODE DATA: SOURCE CODE	INSTL CAPABILITY	PRE-INSTL CAPABILITY	RECOVERABILITY	SUPPORT EQUIPMENT	FEDERAL STOCK NUMBER DATA: COGNIZANCE CODE	FEDERAL STOCK NUMBER	MFG. CODE (TSMC)
	104 - 2	15									
	104 - 52	2									
	184 - 91	2									
	264 - 69	4									
AN4-6A	12 - 76	130							R	5306-151-1426	G1AN
	21 - 92										
	23 - 64										
	31 - 11										
	35 - 21										
	39 - 15										
	44										
	50 - 47										
	59										
	59A- 86										
	72 - 7										
	104 - 45	4									
	184 - 59	4									
	184 - 94	3									
	347 - 31										
	348 - 46										
AN4-61A		2							R	5306-151-1293	G1AN
AN4-67A	43 - 28	2							R	5306-151-1287	G1AN
AN4-7	80 - 43	3							R	5306-144-3706	G1AN
	316 - 13										
AN4-7A	16 -212	134							R	5305-151-1425	G1AN
	21 - 97										
	21 -113										
	35 - 82										
	38										
	39 - 5										
	39 - 24										
	43										
	48 - 66										
	51 - 21										
	334 - 49										
AN4DD61A	26 - 54	2							R	5306	
AN4H	20 - 42	AR							R	5306	
AN4H-5A		1									
AN4H-6A		1									
AN4H11A	95 -179	2							R	5306-182-1959	G1AN
	97 -181										
AN4H15A	201 - 1	3							R	5306-182-1963	G1AN
AN4H16A	53 - 54	2							R	5306-182-1964	G1AN
AN4H23A	111 - 16	1							R	5306-182-2039	G1AN
AN4H3A	11 - 25	4							R	5306-182-2014	G1AN
AN4H4A	20 - 14	24							R	5306-182-2015	G1AN
	20 - 24										
	20 - 34										
	104 - 49	1									
	105 - 59										
	131 - 1										
AN4H5A	20 - 26	65							R	5306-182-2016	G1AN
	20 - 36										
	93										
	94										
	95										
	97 -188										
	99 - 84										
	100 -184										
	104 - 21	4									
	104 - 28	4									
	104 - 35	4									
	349 - 53	4									
AN4H6A	95 -159	12							R	5306-182-2017	G1AN
	97 -159										
	98 - 73										
	99 -106										
	100 -209										
	111 - 9										
	349 - 57	4									
	358										
AN4H7A	89 - 48	1							R	5306-292-8252	G1AN
AN4D44		3									
AN4D44-1	PG. 1019										
	PG. 1022										
	104	1									
	105										
	122 - 2										
	122 - 4										
	123 - 5										
	125 - 3										
	136 - 3										
	137 - 3										
	355										
	355	1									
	355	1									
	355	1									
AN4D45-1	PG. 1013										
	PG. 1022										
	239 - 5	2									
	355										
AN415-1-1	PG. 1010	1									
AN415-2	58 -168	2							R	5315-194-2455	GH80
	63 - 48										
	333 - 74										
	334 -204										
AN416-2	PG. 1016										
	334 - 39	1									
	355										
	PG. 1024										
AN42-13	75 - 3	2							R	5305-271-6872	G1AN
AN42-13A	PG. 1007	1									
AN42-27		1									
AN42-3A	86 - 66	1							R	5306-271-6862	G1AN
AN42-4	44 - 10	2							R	5306-260-7570	G1AN
AN42-4A	35 - 22	2									
	35 - 87										
	47 - 46										
AN42-5	44 - 43	5							R	5306-260-7571	G1AN
	74 - 42										
	203 -101										
AN42-5A	35 - 84	1									
AN42-6		1							R	5306-260-7572	G1AN
AN42-6A	83 - 96	2							R	5305-271-6847	G1AN
AN42B-C4A	335 - 45	1									
AN42B4		1									
AN426AD5-4		2							R	5320-117-6881	G191
AN426AD5-6		4							R	5320-117-6883	G191
AN43-14A	65 - 33	1									
	PG. 1007										
AN43-32A	34 - 23	2									
AN43-33A		2									
AN435-6-10	58 - 74	1									
AN435M4	58 -152	1									
AN436-2	34 - 24	2									
AN44-23A	71 - 48	2									
AN45-10A	11 - 23	4									
AN450C8B14		6									
AN46-25A	11 - 34	2									
AN46A		2									
AN470-6-4	193 - 97	2									
AN470AD4-5		3							R	5320-177-6827	G191
AN470AD5-4		2							R	5320-117-6837	G191
AN481-12P	44 - 14	1									
AN481-4P	44 - 46	1									
AN486-2		2							R	5340-257-3765	
AN486-3	195	2							R	5340-257-3768	
AN486-4	35 - 44	2							R	5340-257-3767	
	35 - 55										
	41 - 37										
	42 - 41										
	42 - 65										
AN5-10A	59 - 38	18							R	5305-145-7036	
	59A										
	80 - 48										
	91 - 41										
	116 - 45										
AN5-11	45 - 33	4							P	5306-151-1721	G1AN
	PG. 1006										
	PG. 1008										
AN5-11A	38 - 26	24							R	5305-150-9103	
	50										
	56 - 49										
	59 - 37										
	59A										
	60 - 22										
	74 - 41										
	113 - 36										
	PG. 1006										
AN5-12	PG. 1008	3									
AN5-12A	52 - 32	12							R	5305-151-2627	
	58 -150										
	59										
	59A										
	74 - 38										
	188 - 4										
	189 - 3										
	362 - 46										
	362A- 34										
	364 - 5										
	PG. 1004										
AN5-13A	38 - 29	45							R	5305-151-2626	
	40 - 20										
	43 -107										
	56 - 50										
	59A- 26										
	60 - 23										
	61 - 90										
	116 - 44										
	118 - 27										
AN5-14A	66 - 25	8							R	5306-151-1284	
	366 - 52										
AN5-15A	184 -119	1									
	185										
	186 - 42										
	188 - 44										
	189 - 8										
	358										
	366 - 5										
AN5-16	185 - 45	2							R	5306-151-1716	G1AN
AN5-16A	40 - 21	3							R	5305-151-2625	G1AN
	185 - 41										
AN5-17A	12 - 15	3							R	5306-151-2624	
	56 - 66										
	60 - 39										
AN5-20A		8							R	5306-151-2623	
AN5-21	200 - 57	4							P	5306-151-1713	G1AN
AN5-21A	12 - 16	2							R	5306-151-2622	
	40 - 13										
AN5-22A	45 - 15	4							R	5306-151-2621	
	56 - 67										
	60 - 40										
AN5-23A	382	1									
AN5-24A	56 - 65	8							R	5306-151-2619	
	60 - 38										
	362										
AN5-27A	12 - 78	4							R	5306-151-2616	
	45 - 4										
	PG. 1006										
AN5-33A	61 - 30	5							R	5306-151-2612	

PART NUMBER	FIGURE AND INDEX	TOTAL QTY.	MICRO-FILM NUMBER	MAINTENANCE CODE DATA: SOURCE CODE	INSTL CAPABILITY	PRE-INSTL CAPABILITY	RECOVERABILITY	SUPPORT EQUIPMENT	FEDERAL STOCK NUMBER DATA: COGNIZANCE CODE	FEDERAL STOCK NUMBER	MFG. CODE (TSMC)
AN5-34A	57 - 37	2							R	5306-150-9236	G1AN
AN5-35A	PG. 1006										
	363 - 27	2									
AN5-36A	12 - 77	2							R	5306-150-9235	
	363 - 13										
	363 - 60										
AN5-37A	363 - 32	4									
	363 - 61										
AN5-4A		8							R	5306-150-9533	
	110 - 9	4									
AN5-40A	363 - 26	4									
	363 - 33										
AN5-41A	363 - 29	6									
	363 - 55										
AN5-42A	363 - 56	2									
AN5-5A	61 -100	2									
	287 - 46										
AN5-6	51 - 7	2									
AN5-6A	76 - 31	11							R	5306-150-9101	
	110 - 7										
	205 - 65										
AN5-7A	43 -123	22							R	5306-150-9102	
	50										
	55 - 18										
	61 -104										
	76 - 50										
	83 - 84										
	362 - 41										
	362A- 21										
	364 - 41										
	PG. 1006										
AN5H-4	110	1									
AN5M21A		4									
AN5M4A		4							R	5306-182-2023	
AN5M5A	31 - 9	8							R	5306-182-2024	
	31 - 17										
AN5H7A	101	12							R	5306-182-2026	
	102										
AN500-6-8		2									
AN500-8-10	36 - 22	4							R	5305-206-0919	G192
AN500A8-8		4									
AN500A8B	271 - 21	4									
AN500AC10-7		8							R	5300-C00-7274	G192
AN500AC8-7	328	8							R	5305-156-2679	G192
AN500A10-5	63 - 27	2							R	5305-264-2189	G192
AN500A4-3	188 - 34	3									
AN500A4-5	189 -106	3									
AN500A4-6	295	3							R	5305-151-0397	G192
AN500A4-7	210	4									
AN500A6		2							R	5305-281-4170	G192
AN500A6-16	271 - 30	4									
AN500A6-4	95 -151	2									
AN500A6-5	96	24							R	5305-151-0390	G192
	97 -149										
	98 - 99										
	98 -120										
	99 -133										
	99 -150										
	100 -168										
	102 -152										
	103 -109										
	104 - 25	2									
	104 - 32	2									
	104 - 39	2									
AN500A6-6	93	12							R	5305-151-0389	G192
	94										
	95										
	96 - 31										
	97										
	99										
	100										
AN500A8-4	122	4							R	5305-151-0363	G192
	212										
AN500A8-6		4							R	5305-151-0365	G192
AN500A8-8		4									
AN500C6-8	330 - 23	2									
AN501-10-10	173 - 51	4									
AN501-10-7		2									
AN501-10-8	173 - 30	8									
	173 - 54										
AN501AC10-10		4							R	5300-C00-7295	G192
AN501A10-20	151 - 42	4							R	5305-264-2159	G192
AN501A10-40		1							R	5305-271-7833	G192
AN501A10-5		1							R	5305-156-2718	G192
AN501A10-7		2							R	5305-156-2716	G192
AN501A10-8	29 - 27	20							R	5305-637-9292	G192
	151 - 8										
	213										
	338 - 39										
	339 - 21										
AN502-10-12	65 - 17	1							R	5305-271-5228	G192
AN502-10-26	65 - 69	4									
	179 - 5										
AN502-10-6	128 - 65	6							R	5305-150-9213	G192
	128 -105										
AN502-10-8	99 - 90	10							R	5305-497-3967	G192
	100 -193										
	110 - 16										
	355 -212										
	PG. 1018										
	PG. 1024										
AN502-10R10	127	3									
AN502-416-18	131 - 96	1									
AN502-416-8	25 - 6	3							R	5305-271-5238	G192
	133 - 15										

PART NUMBER	FIGURE AND INDEX	TOTAL QTY.	MICRO-FILM NUMBER	MAINTENANCE CODE DATA: SOURCE CODE	INSTL CAPABILITY	PRE-INSTL CAPABILITY	RECOVERABILITY	SUPPORT EQUIPMENT	FEDERAL STOCK NUMBER DATA: COGNIZANCE CODE	FEDERAL STOCK NUMBER	MFG. CODE (TSMC)
AN502-6-4		4							R	5305-271-5217	G192
AN503-10-8		2							R	5305-145-7017	G192
AN503-6-4	210 - 24	19									
	242										
AN503-6-6	PG. 1011	7									
AN503-8R10	286A- 15	3									
AN504-2-3		2									
AN504-6R8	366	2									
AN504-8R11		2									
AN507-10-12		2									
AN507-10-18	235	4									
	279										
AN507-10-22	235	2									
	279										
AN507-10R12	224	1									
AN507-10R17	122	8									
	209 - 27										
AN507-10R6	342	1									
	342	1									
	342	1									
AN507-10R7	52 - 65	16									
AN507-1032-10	59 - 19	2							R	5305-271-8216	
AN507-1032-12		3									
AN507-1032-14	12 - 40	2							R	5305-271-8218	G192
AN507-1032-7	112 - 31	12							R	5305-271-3630	G192
AN507-1032D16	338 - 29	4									
AN507-1032R10	47 - 75	42							R	5305-151-0253	G192
	55										
	57										
	57A										
	195										
	269A- 24	4									
	284										
	284A- 14										
	285A- 17										
	306										
	338										
	339										
	350 - 49										
AN507-1032R12	285 - 18	24							R	5305-151-0252	G192
	285 - 28										
	337 - 17	4									
	338										
AN507-1032R14	262	6							R	5305-151-0251	G192
	338 - 21										
AN507-1032R16	234 - 10	10							R	5305-150-9750	G192
	279 - 10										
	338 - 28										
	339 - 60										
	339 - 72										
AN507-1032R18	338 - 32	5							R	5305-150-9749	G192
	338 - 34										
AN507-1032R20	337 - 33	2									
AN507-1032R22	337 - 52	2									
AN507-1032R30	56 - 39	2							R	5305-150-9743	G192
AN507-1032R32	56 - 38	2							R	5305-150-9742	G192
AN507-1032R6	68 - 2	2							R	5305-151-0256	G192
AN507-1032R7		4									
AN507-1032R8	12 - 10	28							R	5305-151-0254	G192
	17										
	55										
	57A										
	74 - 9										
	88 - 79										
	93 -157										
	122 - 11										
	195	1									
	209										
	337 - 13	6									
AN507-1032R9	337 - 18	4									
	337 - 40	8									
AN507-4R6	357	4									
AN507-4R7		7									
	285A	2									
AN507-4R8	17 - 59	1									
AN507-428B12		4									
AN507-428R10	31 - 5	8									
AN507-428R8	88 - 35	16							R	5305-156-2414	G192
AN507-440-4		2							R	5305-271-8193	G192
AN507-440-5		2							R	5305-271-8190	G192
AN507-440-6	296 - 8	6							R	5305-174-3898	G192
	305 - 24										
	306 - 28										
AN507-440R10	58 - 47	82							R	5305-151-2075	G192
	334 -119	7									
AN507-440R5	33 - 21	1									
AN507-440R6	240 - 14	2									
	334 - 92	19									
AN507-440R7		2							R	5305-151-2079	G192
AN507-440R8	9 - 34	3							R	5305-151-2077	G192
	9 - 41										
	284A- 6										
	333										
AN507-6R12	302 - 18	2									
AN507-6R13	310	2									
AN507-6R6	241 - 15	12									
AN507-6R7		4									
AN507-624R28	13	1							R	5305-359-0293	G192
AN507-632-10	271 - 28	2							R	5305-271-8088	G192
	357										
AN507-632-8	357	2									
AN507-632B7	300	2									
AN507-632R12	300	2							R	5305-144-3954	G192
	301										
	319 - 71	2									

PART NUMBER	FIGURE AND INDEX	TOTAL QTY.	MICRO-FILM NUMBER	MAINTENANCE CODE DATA: SOURCE CODE	INSTL CAPABILITY	PREHSTL CAPABILITY	RECOVERABILITY	SUPPORT EQUIPMENT	FEDERAL STOCK NUMBER DATA: COGNIZANCE CODE	FEDERAL STOCK NUMBER	MFG. CODE (TSMC)
AN507-632R16	189 - 82	2									
AN507-632R19	278 - 11	2									
AN507-632R28	234 - 91	2									
	235 - 90										
AN507-632R32	234 - 92	2									
	235 - 91										
AN507-632R5	61 - 17	1							R	5305-144-3949	G192
AN507-632R6	46	16									
	241										
	264 - 76	2									
	311 - 37										
	312 - 5										
AN507-632R7	244 - 3	22							R	5305-144-3951	G192
	296										
	300										
	301										
	305										
	306										
	313										
AN507-632R8	59 - 13	24							R	5305-144-3952	G192
	219 - 11										
	241										
	284A- 10										
	285A	2									
	300										
	301										
	305										
	306										
	337 - 16	2									
AN507-8R14	234 - 88	2									
	235 - 87										
AN507-8R5	243 - 25	6									
	244 - 24										
AN507-832-8	74 - 32	1									
AN507-832R10	76 - 21	14							R	5305-151-2285	G192
	285A										
	300										
AN507-832R18	279	2									
AN507-832R20	235 - 10	2									
AN507-632R24	305 - 35	6							R	5305-151-2279	G192
	306 - 39										
AN507-832R32		3							R	5305-151-2277	G192
AN507-632R4	270 - 21	6									
AN507-832R5		6							R	5305-151-2288	G192
AN507-832R6	71 - 14	19							R	5305-151-2290	G192
	71 - 76										
AN507-832R7	243 - 5	6							R	5305-151-2287	G192
	270 - 18										
	270 - 27										
	284 - 9										
	285 - 86										
	285 - 88										
	300										
AN507-832R8	13 - 79	78							R	5305-151-2286	G192
	33 - 24										
	76 - 20										
	122										
	212										
	243 - 7										
	244 - 5										
	269A- 19	4									
	285 - 84										
	285 - 85										
	285A										
	338 - 24										
	339 - 37										
AN507-832R9	285 - 14	10									
AN507B6R4	271	1									
	278 - 33										
AN507UB6R4	271	1									
	278 - 34										
AN50710R17	209 - 17	6									
AN508-4-3	296	4									
	300										
	301										
	305										
	306										
	318										
AN508-4-40		1									
AN509-10-10	3 - 23	8							R	5305-271-6076	G192
AN509-10-11	7 - 29	24									
	78 - 5										
	78 - 33										
	80 - 11										
	335 - 11	8									
AN509-10-13	10 -127	15									
	41 - 41										
	87 - 24										
	357										
AN509-10-14		3									
AN509-10-15	42 - 80	10									
	335 - 10	10									
AN509-10-16	50 - 39	4									
	357										
AN509-10-17		4									
AN509-10-18		2									
AN509-10-23	71 - 62	3									
	71 - 73										
AN509-10-26	316 - 5	2									
AN509-10-37	259 - 12	1									
AN509-10-6	39	28									
AN509-10-8	335 - 49	28									
AN509-10-9	335 - 48	4									
AN509-10RG		23									
AN509-10RS		4									

PART NUMBER	FIGURE AND INDEX	TOTAL QTY.	MICRO-FILM NUMBER	MAINTENANCE CODE DATA: SOURCE CODE	INSTL CAPABILITY	PREHSTL CAPABILITY	RECOVERABILITY	SUPPORT EQUIPMENT	FEDERAL STOCK NUMBER DATA: COGNIZANCE CODE	FEDERAL STOCK NUMBER	MFG. CODE (TSMC)
AN509-10R10	3 - 21	307							R	5305-151-1549	G192
	9 - 20										
	9 - 22										
	10 - 2										
	10 - 3										
	10 - 54										
	10 - 72										
	10 - 82										
	12										
	15 -215										
AN509-10R11	3 - 25	143							R	5305-151-2523	G192
	5 - 12										
	6 - 7										
	9 - 14										
	10 - 45										
	10 - 49										
	10 - 50										
	11 - 42										
	18										
	21										
	334 - 14										
AN509-10R12	5 - 13	151							R	5305-151-2524	G192
	6										
	10 - 4										
	10 - 5										
	10 - 8										
	10 - 9										
	10 - 12										
	10 - 83										
	10 -104										
	10 -105										
	123										
	125										
	172	1									
	184 - 35	4									
	335 - 9	2									
AN509-10R13	3 - 17	60							R	5305-274-0309	G192
	6 - 9										
	6 - 10										
	6 - 17										
	7 - 2										
	10 - 25										
	10 - 26										
	10 - 27										
	10 - 30										
	10 - 31										
	172	1									
	172 - 44	1									
	334 -115										
AN509-10R14	5 - 3	52							R	5305-151-2522	G192
	5 - 5										
	5 - 14										
	10 - 35										
	10 - 36										
	10 - 37										
	10 - 38										
	12										
	17										
	18 - 35										
	172 - 45	4									
	334 - 15										
	342 - 24	2									
	342 - 43	2									
AN509-10R15	5 - 15	63							R	5305-151-2521	G192
	6 - 6										
	6 - 11										
	6 - 18										
	7 - 1										
	10 - 15										
	10 - 17										
	10 - 19										
	10 - 44										
	10 - 47										
	172 - 46	1									
AN509-10R16	6 - 12	8							R	5305-274-0563	G192
	6 - 16										
	7 - 3										
	93 -130										
	172	2									
	173										
	193 - 87										
	234 - 37										
	235 - 37										
AN509-10R17	60 - 12	12							R	5305-151-2519	G192
	171 - 24										
	176 - 11										
	186 - 63										
	193 - 83										
	193 - 89	1									
	357										
AN509-10R18	6 - 13	15							R	5305-151-2518	G192
	6 - 15										
	7 - 4										
	9 - 43										
	9 - 48										
	41 - 27										
	41 - 29										
	197 - 81										
	198 - 79										
	198 - 82										
AN509-10R19	6 - 26	12							R	5305-151-2517	G192
	38 - 6										
	38 - 14										
	83 - 11										
	171 - 25										

PART NUMBER	FIGURE AND INDEX	TOTAL QTY.	MICRO-FILM NUMBER	MAINTENANCE CODE DATA: SOURCE CODE	INSTL CAPABILITY	PRE-INSTL CAPABILITY	RECOVERABILITY	SUPPORT EQUIPMENT	FEDERAL STOCK NUMBER DATA: COGNIZANCE CODE	FEDERAL STOCK NUMBER	MFG. CODE (TSMC)
	357										
AN509-10R20	11 - 43	3							R	5305-151-2536	G192
	60 - 18										
	259 - 20										
	259 - 95										
AN509-10R21	63 - 31	4							R	5305-151-2535	G192
	92 - 23										
	259 - 77										
AN509-10R22	41 - 15	4							R	5305-151-2534	G192
	60 - 17										
	171 - 89										
	255 - 27										
	357										
AN509-10R24		2							R	5305-151-2532	G192
AN509-10R25	6 - 35	6							R	5305-273-5405	G192
	35 - 50										
	56 - 53										
	60 - 26										
AN509-10R26	56	2							R	5305-274-0553	G192
	60										
	259 -135										
AN509-10R27	6 - 45	16							R	5305-273-5406	G192
	73 - 9										
AN509-10R28	92 - 33	7							R	5305-151-2410	G192
AN509-10R29	61 - 4	4							R	5305-273-5407	G192
AN509-10R36	6 - 44	1							R	5305-151-2406	G192
AN509-10R38	188 - 85	1							R	5305-151-2405	G192
AN509-10R40	188 - 81	1									
AN509-10R46	30 - 51	2							R	5305-151-2401	G192
	333 - 61										
AN509-10R5	219	4							R	5305-273-5400	G192
	357										
AN509-10R6	6 - 1	63							R	5305	
	6 - 2										
	6 - 8										
	9 - 4										
	9 - 5										
	9 - 45										
	9 - 46										
	9 - 47										
	10 - 42										
	10 - 43										
	337 - 25	6									
	343 - 12										
	345A- 12										
	347 - 28										
AN509-10R7	3 - 16	266							R	5305-273-5402	G192
	5 - 11										
	9 - 24										
	9 - 29										
	9 - 36										
	17 - 22										
	33 - 28										
	33 - 45										
	39 - 40										
	70 - 19										
	349 - 33	9									
AN509-10R8	3 - 13	198							R	5305-182-1343	G192
	4 - 4										
	9 - 28										
	9 - 39										
	10 - 21										
	10 - 22										
	17 - 56										
	35 - 11										
	35 - 12										
	39 - 35										
	333 -113										
	334 - 95										
	336 - 8	3									
	342 - 10	1									
	342 - 32	2									
	342 - 49	2									
	342 - 57	1									
	349 - 44	4									
AN509-10R9	9 - 3	219							R	5305-273-5404	G192
	10 - 53										
	12										
	32 - 8										
	33 - 35										
	42										
	43										
	44 -121										
	44 -129										
	71 - 51										
	342 - 54										
	342 - 56										
AN509-10R9R2		7									
AN509-1011	PG. 1006	4									
AN509-1015		4									
AN509-1032		40									
AN509-1032-R8	336 - 5	3									
AN509-1032R12		4									
AN509-1032R14		10									
AN509-1032R16		14									
AN509-1032R8	337 - 55	2									
AN509-1037		1									
AN509-11		16									
AN509-4R19		1									
AN509-416-R13	329 - 19	4									
AN509-416-11	70	18									
	72 - 23										
AN509-416-13	31 - 3	8									
	100 -175										
AN509-416-14	87 - 25	6									

PART NUMBER	FIGURE AND INDEX	TOTAL QTY.	MICRO-FILM NUMBER	MAINTENANCE CODE DATA: SOURCE CODE	INSTL CAPABILITY	PRE-INSTL CAPABILITY	RECOVERABILITY	SUPPORT EQUIPMENT	FEDERAL STOCK NUMBER DATA: COGNIZANCE CODE	FEDERAL STOCK NUMBER	MFG. CODE (TSMC)
	87 - 27										
	166 - 72										
AN509-416-15	31 - 16	4									
AN509-416-16	16 - 17	20									
AN509-416-26	76 - 46	4									
AN509-416R11	345A-29	4							R	5305-274-0551	G192
AN509-416R12	18	64							R	5305-274-0552	G192
	58 - 69										
	59 - 36										
	59A- 80										
	333										
AN509-416R13	33 - 68	20							R	5305-273-5420	G192
	48 - 35										
	58 - 15										
	87 - 10										
	116 - 64										
	209 - 6										
	355										
	PG. 1016										
	PG. 1024										
AN509-416R14	53 - 21	14							R	5305-274-0494	G192
	176 -144										
	282 - 9										
	333										
	363 - 65										
AN509-416R15	10 - 61	6							R	5305-274-0495	G192
	176 -140										
AN509-416R16	10 - 62	84							R	5305-274-0496	G192
	10 - 67										
	14 - 42										
	39 - 11										
	176 -101										
	176 -136										
	176 -145										
	259 -216										
	333 - 58										
	363 - 37										
AN509-416R18	65 - 10	5							R	5305-271-6041	G192
	176 -137										
	176 -141										
	335A										
AN509-416R19	45 - 54	2							R	5305-271-6042	
	356										
	363 - 47										
	363 - 75										
AN509-416R20	68 - 15	2							R	5305-272-4641	
AN509-416R22	333	16									
AN509-416R23	11 - 37	8							R	5305-262-7478	
AN509-416R25	191 - 13	1							R	5305-271-6070	
AN509-416R26	333 -111	2							R	5305-271-6067	
AN509-416R27	335 - 59	2									
AN509-416R34	188 - 75	1									
AN509-416R37		2							R	5305-272-4935	
AN509-416R38	52	1									
AN509-416R39	52 - 50	1									
AN509-416R9	58 -102	1							R	5305-273-5396	
AN509-516-12	78 - 4	1									
AN509-516R13	44 - 37	24							R	5305-271-7225	G1AN
AN509-516R14	43 - 32	100							R	5305-271-7218	
	43 - 57										
	44 - 38										
	365 - 29										
AN509-516R15	43 - 56	48							R	5305-271-7217	
AN509-516R16	44 - 34	4							R	5305-271-7220	
	54 - 8										
AN509-516R17	54 - 7	4							R	5305-271-7219	
AN509-516R18	44 - 36	8							R	5305-271-7222	
AN509-516R19	44 - 35	2							R	5305-271-7136	
AN509-516R20	334 -214	22									
AN509-516R36	30 - 74	2							R	5305-274-0808	
AN509-516R60		4									
AN509-6R6	41 - 68	2									
AN509-6R7	41 - 77	2									
AN509-6R8	39	4									
AN509-616R15		24									
AN509-616R20	334 -220	12									
AN509-616R24	333	4							R	5305-206-1941	
AN509-616R29		1									
AN509-8-10	10 -128	2									
	18										
	357										
AN509-8-13	33 - 10	4									
	349										
	349	1									
	357										
AN509-8-14	18 -135	2									
	357										
AN509-8-6	357	2									
AN509-8-8	349	1									
	349	1									
AN509-8-9	33 - 11	3									
	357										
AN509-8R10	6 - 32	23							R	5305-271-5018	
	44 - 42										
	151 - 11										
AN509-8R11	6 - 33	14							R	5305-271-5015	
	9 - 26										
	44 - 19										
	65										
AN509-8R12	10 -141	6							R	5305-271-5016	
	13 -127										
	44 -142	1									
AN509-8R13	193 - 20	2									
	13 - 64	4							R	5305-271-5020	
AN509-8R14	234 - 74										

PART NUMBER	FIGURE AND INDEX	TOTAL QTY.	MICRO-FILM NUMBER	MAINTENANCE CODE DATA: SOURCE CODE	INST'L CAPABILITY	PRI-INST'L CAPABILITY	RECOVERABILITY	SUPPORT EQUIPMENT	FEDERAL STOCK NUMBER DATA: COGNIZANCE CODE	FEDERAL STOCK NUMBER	MFG. CODE (TSMC)
	295 - 73										
	298 - 12										
AN509-8R15	32 - 6	10							R	5305-271-5021	
	33 - 30										
	44 - 9										
	48										
	PG. 1007										
AN509-8R17	PG. 1006	4									
AN509-8R30	2 - 9	2									
AN509-8R6	44 - 65	36							R	5305-271-6078	
AN509-8R8	33 - 51	17							R	5305-271-6038	
	151 - 10										
	209 - 3										
AN509-8R9	33 - 50	13							R	5305-271-5017	
	44 - 30										
	44 - 62										
	47 - 36										
	63 - 2										
	334 -148										
AN509-816A28	363 - 17	4									
AN509C10-6	354 - 29	4									
AN509R10-8		5									
AN510B5-5	354 - 16	8									
AN515-10-8		6							R	5305-151-2751	
AN515-10R8		8									
AN515-2-3	330 - 37	4							R	5305-151-3556	G192
AN515-4-12		2							R	5305-151-3582	G192
AN515-4-14		2							R	5305-151-3583	G192
AN515-4R7	347 - 7	4									
AN515-4R10	269A- 28	4									
	285A										
	287A- 40										
	333										
AN515-4R12	219 - 8	1							R	5305-151-1381	
AN515-4R14		4							R	5305-151-1382	
AN515-4R16	339 - 60	2									
AN515-4R3	365	4									
AN515-4R4	284	2							R	5305-151-1499	
	285 - 77										
	287 - 28										
AN515-4R5	251 - 28	38							R	5305-151-1500	
	284 - 23										
	285 - 23										
	285 - 61										
	285 - 69										
	285 - 92										
	314 - 1										
	314 - 2										
	319 - 1										
AN515-4R6	PG. 1015										
	PG. 1024										
	285A	16							R	5305-151-1377	
	295 - 41										
AN515-4R7	210	29							R	5305-151-1378	
	210 - 53	4									
	269A- 15	8									
	270 - 32										
	270 - 64										
	284 - 22										
	285A										
	287 - 23										
	346A	4									
AN515-4R8	269	4									
	285A- 16	8							R	5305-151-1379	
	333										
	335	8									
	336	4									
AN515-440R7	334 -122	9									
AN515-6-4	112 - 28	4							R	5305-151-3586	G192
AN515-6-6	102 - 95	6							R	5305-151-1847	G192
	102 -122										
	105 - 83										
	103 -130										
AN515-6-7		2							R	5305-151-1848	G192
AN515-6R10	84 - 95	40							R	5305-151-1232	G192
	99										
	100										
	189 - 74										
	282 - 13										
	285A- 13										
	322										
	355										
	PG. 1025										
AN515-6R12	124	16							R	5305-151-1233	G192
	126										
	152 - 40										
	175										
	276 - 14										
AN515-6R15	127	4									
AN515-6R16		2									
AN515-6R18	234 - 69	16							R	5305-151-1236	G192
	235 - 67										
	238 - 7										
	270 - 94										
	271										
	278 - 24										
	284 - 12										
	287 - 56										
	295 - 15										
	295 - 28										
AN515-6R20	225 - 75	16							R	5305-151-1237	G192
	230 - 10										
	234 - 68										
	238 - 6										
AN515-6R24	350 - 68	2							R	5305-151-1238	G192

PART NUMBER	FIGURE AND INDEX	TOTAL QTY.	MICRO-FILM NUMBER	MAINTENANCE CODE DATA: SOURCE CODE	INST'L CAPABILITY	PRI-INST'L CAPABILITY	RECOVERABILITY	SUPPORT EQUIPMENT	FEDERAL STOCK NUMBER DATA: COGNIZANCE CODE	FEDERAL STOCK NUMBER	MFG. CODE (TSMC)
AN515-6R26	235 - 68	2									
AN515-6R28		2									
AN515-6R3	175	4									
	223										
AN515-6R4	53 - 25	12							R	5305-151-1227	G192
	53 - 30										
	95 -133										
	96										
	97 -134										
	102 -150										
	103 -142										
AN515-6R5	210 - 16	3							R	5305-151-1228	G192
AN515-6R6	230 - 5	56							R	5305-151-1229	G192
	236										
	242										
	251 - 21										
	255 - 7										
	255 - 22										
	295 - 33										
	255 - 40										
	270 - 12										
	271 - 15										
	292										
	295 - 13										
AN515-6R7	255	166							R	5305-151-1230	G192
	270 - 42										
	271 - 38										
	284 - 60										
	296 - 19										
	300 - 27										
	301 - 22										
	302 - 9										
	302 - 10										
	302 - 19										
	314 - 31										
	314 - 32										
	319 - 26										
	340										
AN515-6R8	189 - 25	8							R	5305-151-1231	G192
	209 - 46										
	213 - 31										
	241 - 34										
	241 - 44	4									
	270 - 36										
	273 - 7										
	278 - 14										
	285A- 12										
	287A- 26										
	287A- 45										
	299										
	319 - 65										
AN515-632R7	303 - 8	34									
AN515-8-12		1							R	5305-151-1565	G192
AN515-8-14		1							R	5305-151-1566	G192
AN515-8-16		2							R	5305-151-1567	G192
AN515-8-7	74 - 35	1									
AN515-8R10	86 - 46	73							R	5305-144-3721	G192
	198 -181										
	203 - 47										
	203 - 58										
	204										
	213										
	223										
	227 - 19										
	227 - 27										
	227 - 34										
	241 - 62	2									
	286A- 11										
AN515-8R12	211	16							R	5305-144-3722	G192
	240 - 12										
	PG. 1009										
AN515-8R14	214 - 1	7							R	5305-144-3723	G192
	266 - 14										
AN515-8R16	PG. 1009	8									
AN515-8R18	196 - 46	2							R	5305-144-3725	G192
	226										
AN515-8R20	266 - 19	4									
AN515-8R22	126	16							R	5305-271-6331	G192
	127										
	255 - 10										
	255 - 39										
	266 - 20										
	273										
	276 - 19										
AN515-8R24	124	4							R	5305-144-3727	G192
	255 - 32										
	266 - 9										
	355										
	PG. 1016										
	PG. 1025										
AN515-8R28	283 - 9	4									
AN515-8R5	270 - 57	4									
	302										
AN515-8R6	34 - 41	16							R	5305-144-3718	G192
	209										
	214 - 3										
	226										
	279										
	308										
AN515-8R7	76	29							R	5305-144-3719	G192
	122										
	198 -147										
	198 -179										
	212										
	213 - 67										

PART NUMBER	FIGURE AND INDEX	TOTAL QTY.	MICRO-FILM NUMBER	MAINTENANCE CODE DATA: SOURCE CODE	INST'L CAPABILITY	PRE-INST'L CAPABILITY	RECOVERABILITY	SUPPORT EQUIPMENT	FEDERAL STOCK NUMBER DATA: COGNIZANCE CODE	FEDERAL STOCK NUMBER	MFG. CODE (TSMC)
	214 - 16										
	234 - 46										
	287 - 30										
	287 - 32										
	287 - 34										
AN515-8R8	55	128							R	5305-144-3720	G192
	57										
	57A										
	213 - 47										
	213 - 54										
	220 - 8										
	225										
	228 - 14										
	234										
	235 - 45										
	240 - 6										
	241 - 39	2									
	269 - 16	16									
	269 - 23	16									
	269A- 50	4									
	286A- 2										
	287A- 20										
	314 - 74										
AN515-8R9	213	4									
	365 - 47										
AN515PB4-3		3									
AN515PB4-5	354 - 32	2									
AN515R14	241 - 7	2									
AN5158RT	300	4									
AN516-6R8	241 - 73	2									
AN520-10	325 - 1	1									
AN520-10-10	45 - 27	4							R	5305-151-2768	G192
	121 - 13										
AN520-10-30	322	2							R	5305-151-2774	G192
AN520-10-5	29 - 29	2							R	5305-151-2764	G192
	84 - 69										
AN520-10-7	323	2							R	5305-151-2767	G192
AN520-10-8	45 - 29	18							R	5305-151-2767	G192
	89										
	178 - 24										
AN520-10-8-2		2									
AN520-10M8		4									
AN520-10R		3									
AN520-10R10	42 - 29	133							R	5305-144-3820	G192
	43 - 98										
	55										
	57										
	57A										
	58 - 36										
	91 - 7										
	116 - 81										
	123										
	124										
	125										
	143										
	314 - 70										
	319 - 61										
	343										
	345A										
AN520-10R11	92 - 16	1									
AN520-10R12	17 - 32	40							R	5305-144-3821	G192
	17 - 42										
	17 - 51										
	44 -126										
	86 - 31										
	125										
	210										
	213										
	234										
	235										
	279										
	334										
	343										
	347 - 10										
AN520-10R14	44 -127	19							R	5305-144-3822	G192
	213										
	224 - 12										
	293 - 5										
	349 - 21	4									
	352										
	355										
	357										
	PG. 1018										
	PG. 1022										
AN520-10R16	332	3							R	5305-144-3823	G192
	337 - 35	3									
	355										
	358										
	PG. 1018										
	PG. 1022										
AN520-10R18		4							R	5305-144-3824	G192
AN520-10R20	351	2							R	5305-144-3825	G192
	358										
AN520-10R22	234	4							R	5305-144-3826	G192
	279										
	358										
AN520-10R24	295 - 21	3							R	5305-144-3827	G192
	332										
	358										
AN520-10R26	39 - 22	2							R	5305-144-3828	G192
	270 - 89										
AN520-10R28		2							R	5305-144-3829	G192
AN520-10R30	210 - 48	3									
AN520-10R36		4							R	5305-271-8389	G192
AN520-10R4		4									

PART NUMBER	FIGURE AND INDEX	TOTAL QTY.	MICRO-FILM NUMBER	MAINTENANCE CODE DATA: SOURCE CODE	INST'L CAPABILITY	PRE-INST'L CAPABILITY	RECOVERABILITY	SUPPORT EQUIPMENT	FEDERAL STOCK NUMBER DATA: COGNIZANCE CODE	FEDERAL STOCK NUMBER	MFG. CODE (TSMC)
AN520-10R5	47	2							R	5305-144-3816	G192
	152 - 31										
AN520-10R6		4									
AN520-10R7	47	6							R	5305-144-3818	G192
	58 - 35										
	72										
	74 - 10										
	78 - 30										
	150										
	178										
	210										
	228 - 7										
	271 - 46										
	285A										
	295 - 23										
AN520-10R8	21 - 35	217							R	5305-144-3819	G192
	55										
	57										
	57A										
	78 - 35										
	98 - 57										
	99 - 82										
	102 -143										
	210 - 44	4									
	241	4									
	264 - 4	2									
	269	3									
	269 - 10	4									
	269 - 19	4									
	287A- 58										
	319 - 53										
AN520-10R9	39 - 88	16									
	270 - 10										
	270 - 96										
AN520-1032	355 -104	2									
AN520-1088	222	2									
AN520-11	325 - 2	1									
AN520-4R19	330 - 27	4									
AN520-40R8		1									
AN520-416-10	324 - 1	3							R	5305-145-6895	G192
AN520-416-11		1									
AN520-416R	105 - 27	2									
AN520-416R14	342 - 6	2									
AN520-416R16	PG. 1008	2									
AN520-416R20	104 - 18	2									
AN520-417R7	68 - 27	1									
AN520-6-12		2							R	5305-156-2818	G192
AN520-6-4	219 - 13	4							R	5305-151-2229	G192
AN520-8R10	271	2									
AN520-8R14	360 - 21	2									
AN520-8R8	287A- 32	4									
AN520C10R10	328	2									
AN520C10R7		4									
AN5201OR12	345A	3									
AN526-C632-6	354 - 21	3									
	354 - 26										
AN526-1032R8	59 - 10	2							R	5305-151-2233	G192
	59 - 17										
AN526-1032R9	180 - 60	9							R	5305-151-2234	G192
AN526-428R14	340 - 4	2									
AN526-632R8	59 - 7	3							R	5305-144-3915	G192
AN526-832R10		3									
AN526-832R8	352	4							R	5305-144-3809	G192
	353										
AN526C1032-7	354 - 3	4									
	354 - 25										
AN528-10R10		1									
AN530-2-6		2									
AN530-4-4		2									
AN530-4R4		2							R	5305-167-2296	G192
AN530-6-4	PG. 1007	2									
AN530-8R6	114	2									
AN535-00-2	128	22									
	131										
	138										
	141 - 51										
	142 - 30										
	143 - 19										
	145 - 29										
	146 - 14										
	155 - 76										
	157 - 17										
	166 - 28										
AN535-2-4	89 - 83	4									
AN535-4-4	89 - 55	2									
AN535-6-6	PG. 1009	2									
AN535-8-6	362	18									
	364										
AN545-2-3		4									
AN5534-1	240 - 18	1		M		O			R	5905-344-0132	V170
AN5538-1		1							R	5940-197-9795	D336
AN5538-2		1							R	5940-229-7564	D336
AN5544-3	239 - 2	2									
	355 -234										
	PG. 1013										
AN554B-1		2							R	5940-222-0321	D336
AN554B-3		2							R	5940-222-0322	D336
AN565-1032M8		2									
AN565-6M8		1									
AN565A4-3		2									
AN565A4-5	200 - 2	1									
AN565A8M4		1							R	5305-292-7786	G192
AN565B8H5	196 - 6	1									
AN565B845		1									
AN565C10H5	203 - 3	1							R	5305-292-4583	G192

PART NUMBER	FIGURE AND INDEX	TOTAL QTY.	MICRO-FILM NUMBER	MAINTENANCE CODE DATA: SOURCE CODE	INSTL CAPABILITY	PRI-INSTL CAPABILITY	RECOVERABILITY	SUPPORT EQUIPMENT	FEDERAL STOCK NUMBER DATA: COGNIZANCE CODE	FEDERAL STOCK NUMBER	MFG. CODE (TSMC)
AN565D-632H8	284A- 26	1									
AN565DH3		2									
AN565D10H6	63 - 36	1							R	5305-292-4555	G192
AN565D1032H4		1									
AN565D6H3	112 - 19	4							R	5305-141-4394	G192
AN565D6H5	213	2							R	5305-292-4544	G192
AN565D8H3	203 - 5	4							R	5305-292-4543	
	296 - 9										
	305 - 23										
	306 - 27										
AN565D8H6	296 - 10	3							R	5305-292-4581	
	305 - 22										
	306 - 26										
AN565F1032H10	341 - 35	1									
AN567-1032P8	338 - 19	1									
AN5743L2	315 - 58	2							R	6645-526-4395	V170
	318 - 45										
AN5760L4B	315 - 47	1									
	318 - 42										
AN5766T4		1									
AN577T7A	322 - 93	1									
AN5771-7A	152 - 38	1									
AN5771-7B	152 - 38	1									
AN5771-77A		1									
AN5771T4C	321 - 74	1							R	6685-634-9105	V170
AN5771T7A	124 - 91	12									
	126 - 76										
	127 -100										
AN5771T7B	124 - 91	12							R	6685-531-4799	V170
AN5800-1	52	1							R	9905-634-1473	V170
AN5808-1	317 - 2	4							R	5340-634-7440	V170
	318 - 71										
AN5808-2	317 - 3	6							R	6695-321-3231	V170
	318 - 70										
AN5816-2	219 - 1	3							P	6610-515-5770	V170
	219 - 14										
	275 - 8										
AN5820T2	223 - 48	2									
	315 - 51										
AN5823-1		2							P	6605-346-1516	V170
AN5825-7	315 - 50	2									
	318 - 51	1									
AN6-10A	89 - 29	12							R	5306-180-1502	
	215										
	216										
	298 - 22										
AN6-12		4							R	5306-151-1339	G1AN
AN6-12A	48 - 55	2							R	5306-180-1484	G1AN
AN6-14	144 - 28	1							R	5306-151-1337	G1AN
AN6-14A	216	4									
	360 - 36										
	PG. 1007										
AN6-15A	360 - 32	8							R	5306-180-1487	G1AN
	366 - 68										
	PG. 1007										
AN6-16A	78 - 61	9							R	5306-180-1488	G1AN
	144 - 29										
	185 - 91										
	331 - 2										
AN6-17A		1									
AN6-20	45 - 32	2							R	5306-167-3686	G1AN
AN6-20A	47 - 58	3							R	5306-180-1490	G1AN
	64 - 60										
	66 - 49										
	144 - 36										
AN6-21		6							R	5306-167-3687	G1AN
AN6-21A	64 - 37	1							R	5306-180-0301	G1AN
AN6-22	78 - 71	1							R	5306-167-3688	G1AN
AN6-22A	360 - 20	8							R	5306-180-0302	G1AN
AN6-23A	64 - 89	1							R	5306-180-0303	G1AN
AN6-24	366 - 43	2							R	5306-167-3690	G1AN
AN6-25A	366 - 48	2									
AN6-27A	365 - 11	4									
AN6-30A	365 - 15	4									
AN6-31A	365 - 7	4									
AN6-33A	365 - 25	4									
	365 - 35										
AN6-36A		1							R	5305-180-0001	G1AN
AN6-40A	33 - 19	1							R	5305-275-9561	G1AN
AN6-5A		1							R	5305-180-0238	G1AN
AN6-53A	360 - 7	1									
AN6-6A	205 - 83	1									
AN6-7		2									
AN6-7A	297 - 12	3							R	5305-180-0240	G1AN
	298 - 27										
	298 - 33										
AN6A14	79 - 17	1									
AN6A15	79 - 18	1									
AN6H6A	191 - 46	4							R	5306	
	191 - 54										
	192 - 25										
	192 - 32										
AN6H7A	65 - 40	1									
	346 - 35										
	347 - 48										
AN6003T12A	352 - 38	1							R	1660-535-8844	Y120
	353 - 21										
AN6014-1	353 - 9	1							R	1660-540-1066	Y120
AN615-8R8		2									
AN620A-1	29 - 31	2									
	84 - 67										
AN6223C3	138 - 27	1									
AN6227		4							R	5330-298-0350	
AN6227-1	131 - 91	12							R	1660-531-4730	GA20
	132 - 24										
	141 - 55										
	155 - 72										
	160 - 16										
	164 - 95										
	165 - 88										
	165 - 91										
	357										
									R	5330-297-6894	GB90
										OR	
									R	1650-514-5710	Y120
										OR	
AN6227-11	141 - 67	4							R	2915-527-9025	ZSTA
	146 - 10										
	155 - 44										
	206 - 14										
									R	5330-514-3556	NVIK
										OR	
AN6227-12	128 -114	10							R	1650-526-4308	YCNL
	131 - 63										
	138 - 51										
	149 - 38										
	155 - 29										
	168 - 19										
	169 - 3										
	284 - 30										
									R	5330-298-6254	ZPED
										OR	
AN6227-13	84 - 69	4									
	155 - 41										
	155 - 66										
AN6227-14	128 - 54	26							R	2840-368-5044	PWXT
	128 - 62										
	131 - 82										
	138 - 60										
	146 - 18										
	155 - 59										
									R	5330-298-6201	ZPED
										OR	
									R	2995-531-4672	GB90
										OR	
AN6227-15	131 - 77	5							R	5330-515-3885	A120
	131 - 93										
	168 - 22										
AN6227-16	128 - 49	7							R	2945-514-4703	Y120
	128 - 57										
	138 - 32										
	138 - 56										
	147 - 20										
	155 - 55										
									R	1650-531-4809	YWTK
										OR	
AN6227-17	131 - 64	7							R	1650-527-9591	YCNL
	169										
	191 - 20										
	191 - 34										
	192 - 21										
									R	5330-298-6203	ZPED
										OR	
AN6227-18	128 -112	8							R	5330-599-2886	GB90
	138 - 52										
	142 - 24										
	155 - 30										
	166 - 18										
	167 - 14										
									R	1650-531-2047	YGCO
										OR	
AN6227-19	145 - 25	6							R	2995-641-4027	PWXT
	149 - 28										
	156 - 22										
									R	5330-641-2637	MCHA
										OR	
AN6227-2	206 - 20	1							R	5330-514-3556	NVTK
									R	1650-526-4310	YCNL
										OR	
AN6227-21	128 - 9	11							R	1660-515-4091	Y120
	128 - 21										
	128 - 24										
	128 - 40										
	350 - 67										
									R	5330-298-6206	ZPED
										OR	
AN6227-22	84 - 18	8							R	1650-526-4313	YCNL
	131 - 15										
	168 - 10										
AN6227-23	138 - 30	7							R	5330-292-7563	GB90
	141 - 65										
	143 - 32										
	350 - 91										
									R	1660-515-4092	Y120
										OR	
	351 - 61										
AN6227-24	156 - 28	1							R	1650-530-0709	YWTK
AN6227-26	146 - 20	4							R	6615-527-9897	GB90
AN6227-27	169	3							R	2995	
	206 - 7										
AN6227-29	149 - 35	4							R	5330	
	166 - 20										
	167 - 17										
AN6227-3	131 - 20	6							R	5330-514-3557	NVIK
	140 - 18										
	145 - 18										
	353										
									R	1650-526-4311	YCNL
										OR	
									R	1660-515-4088	Y120

PART NUMBER	FIGURE AND INDEX	TOTAL QTY.	MICRO-FILM NUMBER	MAINTENANCE CODE DATA: SOURCE CODE	INSTL CAPABILITY	PRE-INSTL CAPABILITY	RECOVERABILITY	SUPPORT EQUIPMENT	FEDERAL STOCK NUMBER DATA: COGNIZANCE CODE	FEDERAL STOCK NUMBER	MFG. CODE (TSMC)
										OR	
AN6227-31	84 - 24	1									
AN6227-32	29 - 14	8							R	5330-634-9091	GB90
	206 - 18										
AN6227-33	128 - 15	4									
	128 - 26										
AN6227-36	84 - 49	1									
AN6227-37	192 - 18	4									
	206 - 12										
AN6227-43		1									
AN6227-44	27 - 11	2									
AN6227-47	27 - 14	2									
AN6227-48		2									
AN6227-5	29 - 19	5							R	2840-368-5050	PWXT
	84 - 45										
	131 - 69										
	155 - 52										
	167 - 22										
									R	5330-291-4870	ZPED
										OR	
									R	1650-530-0710	YPDI
										OR	
AN6227-6	131 - 71	4							R	1660-531-4466	GA20
	155 - 49										
	155 - 68										
	328 - 25										
	328 - 35										
	328 - 40										
	328 - 52										
									R	1650-526-4303	YCNL
										OR	
									R	4730-527-8662	GB90
										OR	
									R	5330-514-3560	NVIK
									R	1720-663-4588	KCAG
										OR	
AN6227-7	27 - 22	16							R	5330-641-2639	NCHA
	27 - 22	1									
	84 - 52										
	140 - 16										
	142 - 32										
	142 - 32	1									
	147 - 16										
	155 - 18										
	161 - 15										
	161 - 19										
	350										
									R	1660-515-5151	Y120
										OR	
AN6227-8	164 - 91	2							R	1650-526-4314	YCNL
	165 - 84										
AN6227-9	124 - 96	2									
	126 - 96	10							R	1560-531-2043	AKAT
	142 - 27										
	142 - 27	1									
	147 - 10										
	167 - 3										
									P	2925-640-9793	ZSNT
										OR	
									R	1650-526-4312	YCNL
										OR	
									R	5330-599-2635	NCHA
										OR	
AN6227B	27	1									
AN6227B-44	27	1									
AN6227B-47	27	1									
AN6227B10	337 - 9	1									
	342 - 35										
	349 - 4										
AN6227B11									R	2915-641-5036	RWXT
										OR	
	119 - 34	3							R	5330-292-3762	GB90
	337 - 5	2									
	342 - 37										
	342 - 39										
	349 - 84	3									
AN6227B12									R	5330-297-6306	YAIR
	334 - 8										
	334 - 13										
	335 - 8	2									
	339 - 8										
	339 - 13										
	340 - 5										
	342 - 2										
	342 - 18										
	342 - 20										
AN6227B13									R	5330-297-6006	NBPD
										OR	
									R	2840-641-7132	PWXT
										OR	
									R	2915-641-5037	PWXT
										OR	
	333 - 5	8							R	6115-522-7631	ZSMA
	334										
	335 - 4	1									
	338 - 2										
	338 - 6										
	339 - 4										
	342 - 16										
AN6227B15									R	5330-599-2986	GB90
										OR	
	351 - 82	1							R	2915-641-4743	NBPD
AN6227B9	351 - 87	1									
AN6227H13		3									
AN6230-1	84 - 76	4							R	5330-297-6287	YAIR

PART NUMBER	FIGURE AND INDEX	TOTAL QTY.	MICRO-FILM NUMBER	MAINTENANCE CODE DATA: SOURCE CODE	INSTL CAPABILITY	PRE-INSTL CAPABILITY	RECOVERABILITY	SUPPORT EQUIPMENT	FEDERAL STOCK NUMBER DATA: COGNIZANCE CODE	FEDERAL STOCK NUMBER	MFG. CODE (TSMC)
	128 - 28										
	169 - 5										
AN6230-13	132 - 16	2							R	5330-634-8581	GB90
	206 - 16										
AN6230-14	132 - 20	6							R	1660-515-4090	Y120
AN6230-15	84 - 41	2									
	84 - 57										
AN6230-2	143 - 25	6							R	5330-297-6897	YAIR
	156 - 25										
AN6230-25		2									
AN6230-3	131 - 12	2							R	5330-297-6290	YAIR
	131 - 37										
AN6230-4	169	1							R	5330-599-3111	GB90
AN6230-6	149 - 30	4							R	1560-530-2109	ADGA
	166 - 24										
									R	5330-141-4139	NMSC
										OR	
AN6230-7	145 - 15	2							R	5330-292-7562	
AN6230-8	84 - 20	9									
	84 - 29										
	128 - 11										
	128 - 19										
	131 - 25										
AN6231-9	145 - 24	1									
AN6231A1	141 - 58	5							R	1650-640-8555	GB90
	160 - 11										
AN6231A12	84 - 8	2							R	1650-640-8560	GB90
	131 - 33										
AN6231A2	146 - 5	2							R	1650-640-8541	GB90
AN6231A29		1							R	1650	
AN6231A3	143 - 35	2							R	1650-640-8558	GB90
AN6231A33	27 - 7	2									
AN6231A4		1							R	1650-517-0159	GB90
AN6231A8	157 - 21	2									
	166 - 14										
	167 - 10										
AN6231A9	149 - 23	5							R	1650-640-8544	GB90
	156 - 18										
AN6232-2		1									
AN6232-3/8	143 - 37	1									
AN6232C1-9/16	161 - 12	1									
AN6232C10-3/16		1									
AN6232C2	160 - 13	2									
AN6232C2-3/16	146 - 8	1									
AN6232C2-3/8		1									
AN6232C2-9/16		1									
AN6232C3-15/16	128 - 12	1									
AN6232C3-9/16	149 - 25	1									
	156 - 20										
AN6232C4-3/16	84 - 10	1									
	131 - 23										
AN6232C9.62		1									
AN6232C9-5/8		1									
AN6232C9-7/16		1									
AN6235-2A	169 - 2	1							R	1650-242-9426	Y120
AN6235-3A	169	1							R	1650-252-0590	Y120
AN6238-1		2							R	5330-196-6695	GB90
AN6244-1	128 - 27										
	169 - 4	8							R	5330-186-4943	GB90
AN6244-4	169	2							R	5330-186-4937	GB90
AN6244-6		4							R	5330-186-4939	GB90
AN6244-8	128 - 10	12							R	5330-186-4941	GB90
	128 - 18										
AN624584	150 - 22	1							R	1650-511-2010	YAPC
AN624584		1									
AN6246-15		1							R	5330-186-4143	
AN6246-27	169	2									
AN6246-29		2							R	5330-186-4121	
AN6246-30		2							R	5330-186-4122	
AN6246-40		2									
AN6246-43		2							R	5330-186-1321	
AN6246-44	27 - 10	4							R	5330-186-4118	
AN6246-47	27 - 13	4							R	5330-186-1322	
AN6246-7	27 - 23	2							R	5330-196-6720	
AN6246-9		2							R	5330-186-4137	
AN627B13		1									
AN6270-4-11	219 -118	5									
	219 -125										
	219 -126										
AN6270-4-12	317 - 21	2									
	318 - 64										
AN6270-4-13		1									
AN6270-4-14	317 - 14	2									
	318 - 62										
AN6270-4-15		1									
AN6270-4-15-3/4		1									
AN6270-4-16	223 - 46	3									
	317 - 8										
	317 - 15										
	318 - 65										
AN6270-4-17	219 -132	5									
	219 -134										
	219 -135										
	317 - 11										
	317 - 13										
	317 - 18										
	318 - 61										
	318 - 63										
AN6270-4-19 1/2		3									
AN6270-4-19-1/2	350 - 58	1									
AN6270-4-20	219 -133	3									
	317 - 19										
AN6270-4-22		2									
AN6270-4-7-1/2	219 -123	1									
AN6270-4-8-1/2	219 -122	1									

PART NUMBER	FIGURE AND INDEX	TOTAL QTY.	MICRO-FILM NUMBER	MAINTENANCE CODE DATA: SOURCE CODE	INST'L CAPABILITY	PRE-INST'L CAPABILITY	RECOVERABILITY	SUPPORT EQUIPMENT	COGNIZANCE CODE	FEDERAL STOCK NUMBER DATA: FEDERAL STOCK NUMBER	MFG. CODE (TSMC)
AN6270-4-9		2									
AN6270-4-9-1/2	219 -125	2									
	219 -126										
AN6270-6-12		1									
AN6277-4	149 - 12	1							R	1600-C02-1229	Y120
AN6279-6CD	124 - 27	3							R	1650-287-4675	X110
	126 - 49										
	127 - 94										
	134										
	135										
	136										
AN628-9012D		1									
AN6280-4	122 - 42	6							Q	4820-433-3832	G250
	123 - 60										
	123 - 64										
	123 -152										
	125 - 51										
	125 - 79										
	133 - 3										
AN6280-6	123 - 36	15							R	4820-433-3833	G250
	124 - 4										
	124 - 61										
	124 - 69										
	125 - 33	1									
	126 - 10										
	126 - 16										
	126 - 72										
	127 - 10										
	127 - 16										
	127 - 77										
AN6280-8	136 - 34	6							R	4820-433-3834	G250
	136 - 76										
	137 - 36										
	137 - 95										
	153 - 3										
	154 - 3										
	358										
AN6283-3		1									
AN6287-1	27 - 1	1							R	1620-485-6186	G311
	84 - 30										
	124 - 88										
	126 - 83										
	127 -109										
	152 - 32										
AN6289-12D	130 - 3	1							P	4730-277-5077	G250
	136										
	355										
	PG. 1020										
	PG. 1027										
AN6289-16		1							R	4730-277-5096	G250
AN6289-16D	137	7							R	4730-277-5095	G250
	355										
	PG. 1020										
	PG. 1021										
	PG. 1026										
	PG. 1027										
AN6289-3	84 - 35	1							R	4730-277-6374	G250
AN6289-4	63 - 22	131							P	4730-277-6372	G250
	122										
	123 - 58										
	123 - 73										
	123 - 87										
	123 - 96										
	125										
	126 - 38										
	134										
AN6289-5	321	2							R	4730-277-5086	G250
	323 - 16										
AN6289-6	122 - 61	92							P	4730-277-5084	G250
	123 -110										
	124 - 58										
	124 - 71										
	125										
	126 - 19										
	126 - 52										
	127 - 19										
	127 - 57										
	127 - 70										
AN6289-6D	PG. 1020	1							R	4730-277-5083	G250
AN6289-8	136										
	137 - 93										
	324 - 12										
	358										
AN6289-8D	134 - 78	5							P	4730-277-5081	G250
	135										
	136										
	137										
	140 - 9										
	355										
	PG. 1020										
	PG. 1021										
	PG. 1027										
AN6289D12	124	8							R	4730-277-5077	G250
	126										
	127										
AN6289D16	350 - 92	1									
AN6289D3	84 - 71	1		M		O					
AN6289D4	84 - 12	4							R	4730-277-6371	
	165										
	223										
	295										
AN6289D5	223 - 19	3							P	4730-277-5085	G250
	295										
AN6289D6		13									
AN6289D8	136 - 37	12							P	4730-277-5081	G250

PART NUMBER	FIGURE AND INDEX	TOTAL QTY.	MICRO-FILM NUMBER	MAINTENANCE CODE DATA: SOURCE CODE	INST'L CAPABILITY	PRE-INST'L CAPABILITY	RECOVERABILITY	SUPPORT EQUIPMENT	COGNIZANCE CODE	FEDERAL STOCK NUMBER DATA: FEDERAL STOCK NUMBER	MFG. CODE (TSMC)
	136 - 49										
	137 - 39										
	137 - 58										
	150 - 11										
	153										
	154										
	170										
AN6290	326 - 4	1									
AN6290-10	131 - 73	3							R	5330-298-6192	
	196										
	269A- 9	2									
	355										
	PG. 1020										
	PG. 1027										
AN6290-12	84 - 62	12							R	5330-251-8839	GB90
	124										
	125										
	126										
	127										
	130 - 5										
	131 - 86										
	136										
	136	1									
	137										
	140 - 6										
	155 - 16										
	355										
	PG. 1013										
AN6290-16	137	2							R	5330-297-9913	GB90
	355										
	PG. 1020										
	PG. 1021										
	PG. 1026										
	PG. 1027										
AN6290-2	131 - 84	1							R	5330-285-0936	GB90
AN6290-3	27 - 29	6							R	5330-285-9839	GB90
	84 - 36										
	84 - 72										
	328 - 27										
AN6290-4	63 - 20	350							R	5330-285-9838	GB90
	66										
	84 - 13										
	122 - 41										
	123 - 48										
	123 - 56										
	123 - 71										
	123 - 80										
	123 - 85										
	123 - 94										
	124 - 37										
	125 - 43										
	125 - 50										
	143 - 74										
AN6290-5	29 - 22	10							R	5330-285-9839	GB90
	125	2									
	163 -105										
	223										
	295										
	321										
	323 - 13										
AN6290-6	122 - 58	262							R	5330-298-6252	GB90
	123 - 68										
	123 -107										
	123 -116										
	124 - 35										
	124 - 60										
	124 - 67										
	124 - 99										
	125 - 57										
	125 -121										
	126 - 21										
	126 - 50										
	143 - 71										
AN6290-8	29 - 24	68							R	5330-285-9841	GB90
	122										
	123										
	124 - 75										
	154 - 76										
	154 - 80										
	155										
	156 - 35										
	156 - 44										
	156 - 76										
AN6290-8D		1									
AN6290-9	PG. 1019	2									
AN6290D6		4									
AN6291-12	124	7							R	5330-186-1296	GB90
	126										
	127										
	130 - 4										
	136										
	355										
	PG. 1020										
	PG. 1027										
AN6291-16	137	8									
	355										
	PG. 1020										
	PG. 1021										
	PG. 1026										
	PG. 1027										
AN6291-3	84 - 37	2							R	5330-186-4046	GB90
	84 - 73										
AN6291-4	63 - 21	142							R	5330-186-4047	GB90
	84 - 14										
	122										

PART NUMBER	FIGURE AND INDEX	TOTAL QTY.	MICRO-FILM NUMBER	MAINTENANCE CODE DATA: SOURCE CODE	INSTL CAPABILITY	PRE-INSTL CAPABILITY	RECOVERABILITY	SUPPORT EQUIPMENT	FEDERAL STOCK NUMBER DATA: COGNIZANCE CODE	FEDERAL STOCK NUMBER	MFG. CODE (TSMC)
	123 - 59										
	123 - 72										
	123 - 86										
	123 - 95										
	124 - 43										
	125										
	126 - 39										
	127 - 39										
AN6291-5	223	4							R	5330-186-1204	GB90
	295										
	321										
	923 - 15										
AN6291-6	122 - 60	115							R	5330-186-1295	GB90
	123 -109										
	123 -118										
	124 - 59										
	124 - 70										
	125										
	126 - 20										
	126 - 51										
	127 - 20										
	127 - 56										
	127 - 71										
AN6291-8	134 - 77	20							R	5330-186-1380	GB90
	134 - 81										
	135										
	136 - 36										
	136 - 48										
	137 - 38										
	137 - 57										
	137 - 92										
	140 - 10										
	150 - 12										
AN6292-6-11-1/2		1									
AN6292-6-12		1							R	4720-212-8238	
AN6292-6-13-1/2		1							R	4700-000-4163	G260
AN6292-6-16		1							R	4720-202-8867	
AN6292-6-18-1/2	122 - 21	1							R	4720-212-8240	G250
	123 - 19										
	358										
									P	4720-203-0099 OR	G250
AN6292-6-20	125 - 19	1							R	4720-289-6055	
	358										
AN6292-8-0137		1									
AN6292-8-13		1							R	4700-000-4172	G260
AN6292-8-14-1/2	122 - 8	1							P	4720-212-8255	G250
	123 - 6										
	136 - 25										
	137 - 15										
	355 - 37										
	355 - 58										
	355 - 67										
	PG. 1019										
	PG. 1021										
	PG. 1022										
	PG. 1027										
AN6292-8-15		1									
AN6292-8-18-1/2	136 - 14	1									
	137 - 26										
	355 - 51										
	355 - 65										
	PG. 1019										
	PG. 1020										
	PG. 1022										
	PG. 1026										
AN6292-8-22		1							R	4720	
AN6297-8-27-1/2	125 - 14	1									
	355 - 45										
	PG. 1019										
	PG. 1022										
AN6292-8-34	135 - 76	1									
AN6292-8-37-1/2	134 - 29	1									
	358										
AN6299-6		1									
AN635-1032		1									
AN637-120	355	1									
AN5532-1A	223 - 28	1							R	4730-098-4259	GB90
AN6538-2	223 - 23	1							R	4820-527-4330	Y120
AN6538-3	223 - 8	1									
AN658-3	181	4							R	4030-273-3089	G313
AN659-1		45									
AN659-2		1									
AN659-26		89									
AN659-3		1									
AN659-4		8									
AN663C2	197	1									
	198										
AN663C3	188	1							R	4030-273-3073	G313
	203										
AN664-C3	195	1									
AN664-2		2							R	4030-267-7107	
AN664C2	53	5							R	4030-273-3081	G313
	58 - 40										
	86										
	117 - 42										
	184										
	184 - 68	1									
	196										
	197										
	198										
	PG. 1017										
	PG. 1025										
	334 - 35										
AN664C3	35 - 62	13							R	4030-272-7750	G313

PART NUMBER	FIGURE AND INDEX	TOTAL QTY.	MICRO-FILM NUMBER	MAINTENANCE CODE DATA: SOURCE CODE	INSTL CAPABILITY	PRE-INSTL CAPABILITY	RECOVERABILITY	SUPPORT EQUIPMENT	FEDERAL STOCK NUMBER DATA: COGNIZANCE CODE	FEDERAL STOCK NUMBER	MFG. CODE (TSMC)
	35 - 67										
	35 - 72										
	42 - 10										
	42 - 17										
	180										
	182										
	183										
	188										
	195										
AN664C5	56 - 15	4							R	4030-132-9171	G313
	184										
	184 - 96	1									
	164 -102	1									
	185										
	188										
	189										
AN665-21L	32	2							R	5340-530-5352	X110
	35 - 65										
AN665-21R	58 -147	3							P	5340-530-5353	X110
AN665-34R	333 - 78										
	335A- 24										
AN666-3RH	200	1									
AN667-2	47	2							R	4030-273-3087	G313
	53	1									
AN667-3	42 - 11	3							R	4030-273-3086	G313
	42 - 18										
	47										
	203										
AN667-4	334	1									
AN667-7	PG. 1006	4									
	PG. 1008										
AN667-8	PG. 1008	3									
AN668-10	PG. 1006	1									
AN668-2	86	1									
AN668-3	200	2							R	4030-132-9182	G313
	203										
AN668-7	PG. 1006	4									
	PG. 1008										
AN668-8	PG. 1008	3									
AN669L2LH	86	1							R	4030-132-9208	G313
AN669L2RH	86	1							R	4030-132-9207	G313
AN669L3LH	180	4							R	4030-132-9220	G313
	181										
	182										
	183										
	196										
	203										
	204										
AN669L3RH	180	1							R	4030-132-9221	G313
	203										
AN669L4RH	362	2							R	4030-132-9213	G313
AN669L5LH	184	2							R	4030-132-9216	G313
	185										
AN669S2LH	197	2							R	4030-132-9238	G313
	198										
	199										
AN669S2RH	197	2							R	4030-132-9219	G313
	198										
	199										
AN669S3L	32	2									
	35 - 66										
AN669S3LH	195	3							R	4030-132-9222	G313
	196										
	200										
	203										
AN669S3RH	195	3							R	4030-132-9223	G313
	196										
	200										
	203										
AN669S5LH	184	5							R	4030-132-9218	G313
	184 -103	1									
	185										
	188										
AN669S5RH	184	5							R	4030-132-9237	G313
	184 - 97	1									
	185										
	188										
AN6770-4-17		1									
AN7-11	PG. 1006	3									
AN7-13A	362 - 29	4									
	364 - 23										
AN7-17A	45 -137	2							R	5306-182-1347	
AN7-21A		16							R	5306-180-0262	
AN7-22A	78 - 54	2							R	5306-180-0263	
AN7-24A		2							R	5306-182-1350	
AN7-30A	78 - 19	2							R	5306-180-0199	
AN7-31A		4									
AN7-32A	85 - 9	2									
AN7-6	205 - 31	1									
AN7H5A	66 - 20	1							R	5306	
AN724016C	355	1									
AN73-3	102 - 25	3									
AN731-1	300	1									
AN735-10	356 - 18	1							P	5340-193-0102	GM80
AN735-44		2							R	5340-193-0153	GM80
AN735D20	358	2									
AN735D24	358	1									
AN735D32	358	1									
AN735D40	358	2									
AN737RM107	351	4							R	4730-278-9138	GM80
AN737RM114	355 - 85	1							R	4730-274-1161	GM80
	PG. 1015										
	PG. 1023										
AN737RM30	119 - 46	2							R	4730-202-8664	GM80
	119 - 52										

PART NUMBER	FIGURE AND INDEX	TOTAL QTY.	MICRO-FILM NUMBER	MAINTENANCE CODE DATA: SOURCE CODE	INSTL CAPABILITY	MIS-INSTL CAPABILITY	RECOVERABILITY	SUPPORT EQUIPMENT	FEDERAL STOCK NUMBER DATA: COGNIZANCE CODE	FEDERAL STOCK NUMBER	MFG. CODE (TSMC)
AN737RM34	223	4							R	4730-274-1163	GH80
AN737RM38	350	4							R	4730-202-8666	GH80
	352										
	353										
AN737RM44	351	10							R	4730-202-8663	GH80
AN737RM46	119 - 49	32							R	4730-202-6917	GH80
	350										
AN737RM48	350	2							R	4730-274-3095	GH80
AN737RM56	350	12							R	4730-274-1160	GH80
	351										
AN737RM58	350	2							R	4730-202-8812	GH80
	351										
AN737RM74	350	14							R	4730-202-9346	GH80
	351										
AN737TW46	173 - 60	1							R	4730-278-0426	GH80
AN74-45		2									
AN74-13	45 -102	4							R	5306-151-0731	G1AN
AN74A-14		3									
AN74A-15		2									
AN74A-16		1									
AN74A14	102 - 28	3									
AN74A15	101 - 50	2							R	5306-151-0413	G1AN
	103 -180										
AN74A16	101 - 51	1							R	5306-151-0412	G1AN
	103 -181										
AN74A3	269	4									
	269	4									
	321										
	323										
AN74A5	274 - 25	2							R	5306-151-0421	G1AN
AN742-14	355 -114	1							R	5340-197-0672	GM80
	PG. 1013										
	PG. 1022										
AN742-20	321	4							R	5340-193-2649	GH80
	323										
AN742-4	361 - 3	1							R	5340-196-9943	GH80
	361 - 11										
	361 - 17										
AN742D10	343										
	349A										
	357	1							R	5340-193-2651	GH80
AN742D16	351 - 46	2							R	5340-186-3416	GH80
	351 - 51										
AN742D16C	PG. 1013	3							R	5340-229-7711	GH80
	PG. 1022										
AN742D24	352	1							R	5340-186-3408	GH80
AN742D7		10							R	5340-186-3390	GH80
AN742F5	198	1									
AN742F8	198 -180	1									
AN743-12		1									
AN743-13		1							R	5310-275-1994	G1AN
AN749-1-3	276 - 21	1									
AN749-1-4	10 -129	1							R	6150-194-7887	D336
	18 -158										
	357										
AN749-1-5	274 - 7	1									
AN749-3-3	5 - 6	3									
	13 - 55										
	17 - 8										
	39 - 66										
	39 - 89										
	42 - 28										
	44 - 29										
	44 - 41										
	44 - 61										
	71 - 41										
	247 - 42										
AN749-3-4	17 - 34	3							R	6150-186-3996	D336
	19 - 75										
	35										
	35	1									
	36 - 6										
	39 - 79										
	44 - 8										
	47 - 39										
	74 - 31										
	358										
AN749-3-5	17 - 15	6									
	17 - 33										
	44 -104										
	75 - 35										
	89 - 46										
	247 - 41										
AN749-3-6	5 - 4	2							P	6150-186-4028	D336
	12 - 71										
	17 - 9										
	47 - 45										
	47 - 51										
	209 - 14										
AN749-3-8		1									
AN749-3-9	358	1									
AN75A10	362	2							R	5306-151-0799	G1AN
AN75A7	362	2							R	5306-151-0800	G1AN
AN7503-21		2									
AN7503-31	25 - 54	2							R	5310-272-0716	G192
	26 - 30										
AN751A2	48	1									
	274 - 5										
AN751B2-4	44	1									
AN7510-1	89 - 31	21									
	340 - 33	1									
AN7510-2	343	16									
	345A										
	346A	1									
	347										

PART NUMBER	FIGURE AND INDEX	TOTAL QTY.	MICRO-FILM NUMBER	MAINTENANCE CODE DATA: SOURCE CODE	INSTL CAPABILITY	MIS-INSTL CAPABILITY	RECOVERABILITY	SUPPORT EQUIPMENT	FEDERAL STOCK NUMBER DATA: COGNIZANCE CODE	FEDERAL STOCK NUMBER	MFG. CODE (TSMC)
	348 - 52										
AN756D20	111 - 7	2							R	4730-289-0788	G250
AN76A41	104	1									
	105										
AN76A47	98 - 77	2							R	5306-180-2688	G1AN
	99 -110										
	100 -213										
	100 -214										
	358										
AN76A50		3									
AN76A51	104 - 12	1									
	105 - 13										
AN761D20	111 - 6	2							R	4730-202-8677	G250
AN765-16	PG. 1013	3							R	5330-527-8107	GB90
	PG. 1022										
AN781-1	253 - 9	7							R	5975-250-6869	D334
AN783D12	355 -123	3							R	4730-203-7272	G250
	PG. 1013										
	PG. 1022										
AN783D6	94 -174	1							R	4730-277-5131	G250
AN783D8	94 -186	1							R	4730-277-5029	G250
AN784-4	63 - 24	1							R	4730-277-5136	G250
AN784-6		1							R	4700-C00-4039	G250
AN784D6	93 - 83	1							R	4730-277-5132	G250
	93 - 85	1									
AN791-5		1							R	4730-287-0258	G250
AN795-3	353 - 8	1							R	4730-433-3451	G250
AN8-14A	362A- 13	2									
	PG. 1007	1									
AN8-16A	366 - 19	20									
	366 - 20										
	366 - 34										
	PG. 1007										
AN8-20A	113 - 15	4									
AN8-21A	69 - 23	4							R	5306-180-0202	
	113										
	116 - 31										
AN8-26A	366 - 64	2									
AN8-32A		2									
AN8-34A	362A- 14	4									
AN8-35	362 - 95	4									
AN8-35A	364 - 12										
	364 - 32										
AN8-40A	362 - 22	2									
	366 - 56										
AN8-42A	364 - 16	2									
AN8-50A	366 - 29	2									
AN8-52A	360 - 12	2									
AN8-70A	83 - 69	2									
AN8H11A	119 - 37	4									
AN8H6A	191 - 9	3							R	5305	
	191 - 23										
	192 - 1										
AN803-12D		2									
AN804-4	355 -139	3							R	4730-278-9383	G250
	PG. 1017										
	PG. 1025										
AN804-4D	219 - 71	4									
	219 -108										
AN804-6D	94 - 69	1									
AN806-A		1									
AN806-3		1							R	4730-289-0430	G250
AN806A	PG. 1010	1									
AN806D6	93 -120	2							R	4730-287-0112	G250
	93 -134										
AN807-4D	52 - 26	2							R	4730-187-0881	G250
	351 - 76										
AN814-2D	131 - 83	1							R	4730-433-9298	G250
AN814-4D	135	1							R	4700-C00-4007	G250
AN814-4DL	355 - 31	1							R	4730-287-0093	G250
	PG. 1013										
AN814-4L	328 - 43	2									
AN814-46		1									
AN814-6D	130 - 8	3							R	4730-289-5940	G250
	156 - 30										
AN814-8D	140 - 13	1							R	4730-287-0101	G250
AN815		1									
AN815-12	93 - 21	3							R	4730-187-0489	G250
	94 - 14										
	95 - 19										
	97 - 14										
AN815-12D	355	1							R	4730-186-9831	G250
AN815-16D	116 - 13	3							R	4730-186-9832	G250
	116 - 17										
AN815-24D	97 - 75	1									
AN815-4	128 - 72	5							R	4730-187-3484	G250
	133 - 11										
	138 - 33										
	349 - 48	1									
	355 -137										
	PG. 1013										
	PG. 1017										
	PG. 1022										
	PG. 1025										
AN815-4D	66 - 66	18							R	4730-186-9811	G250
	107 - 3										
	144 - 31										
	219 - 40										
	219 - 44										
	219 - 54										
	219 - 59										
	219 - 68										
	219 - 77										
	219 - 93										
AN815-5D	223 - 33	2							R	4730-186-9819	G250

PART NUMBER	FIGURE AND INDEX	TOTAL QTY.	MICRO-FILM NUMBER	MAINTENANCE CODE DATA: SOURCE CODE	INST'L CAPABILITY	PRE-INST'L CAPABILITY	RECOVERABILITY	SUPPORT EQUIPMENT	FEDERAL STOCK NUMBER DATA: COGNIZANCE CODE	FEDERAL STOCK NUMBER	MFG. CODE (TSMC)
	223 - 37										
AN815-6	355 -195	1							R	4730-187-0486	G250
	355 -226										
	PG. 1015										
	PG. 1016										
	PG. 1018										
	PG. 1022										
	PG. 1024										
AN815-6D	43 -116	15							R	4730-186-9826	G250
	43 -120										
	93 - 78										
	93 -101										
	93 -112										
	93 -114										
	93 -118										
	93 -124										
	93 -128										
	93 -144										
	349 - 87	1									
AN815-6D		1									
AN815-8D	93 -149	11							R	4730-186-9827	G250
	94 - 45										
	94 - 72										
	94 -139										
	94 -169										
	94 -181										
	95 -189										
	97 -202										
	97 -206										
	116 - 10										
AN815D12	125	2									
	136										
	PG. 1019										
	PG. 1022										
AN815D6	136	2									
	PG. 1019										
	PG. 1022										
	PG. 1027										
AN815D8	122 - 10	1									
	123 - 8										
	136										
	PG. 1019										
	PG. 1022										
AN816-4	351	1							R	4730-187-0840	G250
AN816-4D	317 - 9	3							R	4730-240-5905	G250
	317 - 10										
	317 - 20										
	318 - 59										
AN816-5-4D	352 - 16	1							R	4730-196-9585	G250
AN816-5D	352 - 21	1							R	4730-187-0088	G250
AN816-6-2D	352 - 19	1							R	4730-240-5904	G250
AN816-6D	43 -115	1							R	4730-196-9580	G250
AN818-18D		4							R	4730-222-1915	G250
AN818-24D		1									
AN818-4	PG. 1018	7							R	4730-222-1912	G250
	PG. 1025										
	PG. 1026										
AN818-4D	351	1							R	4730-433-3194	G250
AN818-6C	355	1							R	4730-595-3890	G250
	PG. 1018										
	PG. 1024										
AN818-6D	43 -118	4							R	4730-497-4460	G250
	98										
AN818-8D		8							R	2730-433-3195	G250
AN819-16Z		4							R	4730-277-5100	G250
AN819-24Z		1									
AN819-4	PG. 1018	7							R	4730-289-0225	G250
	PG. 1025										
	PG. 1026										
AN819-6C	355	1							R	4730-595-3102	G250
	PG. 1018										
	PG. 1024										
AN819-6Z	43 -114	4							P	4730-277-4800	G250
	43 -119										
	98 -103										
AN819-8Z		8							P	4730-277-5372	G250
AN821-4D	223 - 44	2							R	4730-194-1041	G250
	295 - 37										
AN821-5D	223 - 35	1							R	4730-194-1042	G250
AN821-6		1									
AN821-6D	93 -116	6							R	4730-194-1034	G250
	93 -122										
	93 -126										
	94 -132										
	94 -136										
	94 -141										
	94 -145										
AN821-8D	93 -138	2							R	4730-194-1043	G250
	93 -142										
AN822-4		1							R	4730-231-4009	G250
AN822-4D	219 -124	5							R	4730-186-9961	G250
	223 - 47										
	317 - 7										
	317 - 16										
	318 - 57										
	350 - 57										
	351										
AN822-5D	354 - 37	1							R	4730-186-9967	G250
	354 - 39										
AN822-6D	320 - 47	2							R	4730-186-9968	G250
	323 - 2										
AN823-4D	223	6							R	4730-186-9951	G250
	317 - 17										
	318 - 58	2									
AN823-5D	354 - 40	1							R	4730-186-9980	G250
AN823-6D		1							R	4730-186-9950	G250
AN824-4D	219 - 19	5							R	4730-279-0872	G250
	219 - 62										
	219 -104										
	357										
AN824-6D	93 -103	2							R	4730-278-9373	G250
AN824-8D	94 - 93	3							R	4730-279-0873	G250
	94 -112										
	94 -119										
	116 - 71										
AN825-4	351 - 97	1							R	4730-277-9305	G250
AN826-4D	317 - 12	5							R	4730-277-5035	G250
	318 - 60										
AN832-12D	100 - 59	4							R	4730-277-6418	G250
	100 - 66										
	100 - 69										
	352 - 42										
	353 - 18	1									
AN832-4	63 - 25	3							P	4730-277-6438	G250
	125 - 52	1									
	328 - 42										
AN832-4D	122 - 43	14							R	4730-277-6445	G250
	123 - 61										
	124 -110										
	126										
	127										
	141 -103										
	142										
	143 - 76										
	144 - 34										
	150 - 42										
	150 - 42	1									
	295 - 35										
AN832-47		1									
AN832-6	95 - 68	1							R	4730-277-6448	G250
	97 - 68										
	358										
AN832-6D	43 - 53	5							R	4730-277-6836	G250
	94 - 77										
	94 -126										
	124										
	126										
	127										
	136 - 59										
	137 - 67										
AN833-10D	223 - 12	1									
AN833-12D	93 - 32	8							R	4730-197-2919	G250
	94 - 30										
	95 - 30										
	97 - 25										
AN833-16D	137 - 10	3							R	4730-197-2920	G250
	355										
	PG. 1021										
	PG. 1027										
AN833-4	63 - 8	7							R	4730-231-3026	G250
	273 - 11										
	349 - 45	3									
	355 - 79										
	PG. 1016										
	PG. 1024										
AN833-4D	93 - 87	19							R	4730-194-1089	G250
	94 -149										
	144 - 30										
	144 - 38										
	149 - 11										
	219 - 74										
	219 - 84										
	219 - 96										
	219 -102										
	219 -106										
AN833-5D	223 - 17	3							R	4730-194-1090	G250
	223 - 40										
	295 - 34										
	352 - 30										
AN833-6D	93 - 68	8							R	4730-197-2916	G250
	93 - 70										
	93 - 95										
	93 -107										
	93 -151										
	94 - 67										
	94 - 82										
	94 -118										
	94 -129										
	94 -157										
AN833-8D	93 - 47	4							R	4730-197-2917	G250
	93 -140										
	94 - 55										
	94 -131										
	136										
	355 -142										
	PG. 1017										
	PG. 1021										
	PG. 1025										
	PG. 1027										
AN834-10D	93 - 52	2							R	4730-277-5164	G250
	94 - 50										
	223 - 3										
AN834-4D	136 - 7	11							R	4730-277-5107	G250
	136 - 20										
	137 - 8										
	137 - 19										
	219 - 99										
	219 -101										
	355										
	PG. 1020										

PART NUMBER	FIGURE AND INDEX	TOTAL QTY.	MICRO-FILM NUMBER	MAINTENANCE CODE DATA: SOURCE CODE	INSTL CAPABILITY	PRE-INSTL CAPABILITY	RECOVERABILITY	SUPPORT EQUIPMENT	FEDERAL STOCK NUMBER DATA: COGNIZANCE CODE	FEDERAL STOCK NUMBER	MFG. CODE (TSMC)
	PG. 1021										
	PG. 1026										
	PG. 1027										
AN837-10D	223 - 11	1							R	4730-187-0000	G250
AN837-12D	100 - 57	5							R	4730-194-1081	G250
	100 - 61										
	100 - 64										
	100 - 68										
	136 - 22										
	PG. 1021										
	PG. 1027										
AN837-16D	137 - 23	1							R	4730-194-1082	G250
	355										
	PG. 1020										
	PG. 1026										
AN837-4	128 - 71	12							R	4730-230-8710	G250
	133 - 9										
	133 - 10										
	273 - 13										
	355 - 80										
	PG. 1013										
	PG. 1016										
	PG. 1022										
	PG. 1024										
AN837-4D	122 - 6	13							R	4730-186-9996	G250
	123 - 3										
	125 - 6										
	219 - 53										
	219 - 65										
	351 - 94										
	355										
	PG. 1020										
	PG. 1026										
	PG. 1027										
AN837-5D	223 - 18	1							R	4730-186-9998	G250
AN837-6	PG. 1013	2							R	4730-231-3948	G250
	PG. 1022										
AN837-6D	93 - 99	3							R	4730-186-9997	G250
	96 - 52										
	103 -187										
	136 - 19										
	355										
	PG. 1021										
	PG. 1027										
AN837-8D	93 -136	10							R	4730-186-9999	G250
	94 - 74										
	94 - 97										
	94 -166										
	137 - 14										
	355										
	PG. 1013										
	PG. 1021										
	PG. 1022										
	PG. 1027										
AN840-4		1							R	4730-277-6387	G250
AN849-16D	350 - 90	1							R	4730-639-9886	G250
AN893-12D	138 -107	2							R	4730-231-1330	G250
	152 - 7										
	324 - 7										
	324 - 19										
	325 - 10										
AN893-151D	136 - 21	1							R	4730-186-9511	G250
	355										
	PG. 1021										
	PG. 1027										
AN893-16D	137 - 13	5							R	4730-186-9512	G250
	355										
	PG. 1013										
	PG. 1021										
	PG. 1022										
	PG. 1027										
AN893-2	320	3							R	4730-188-8091	G250
AN893-2D	123 - 70	3							R	2730-231-1325	G250
	139 - 10										
	139 - 38										
AN893-3	322	1									
AN894D10-8	93 - 49	2							R	4730-277-4740	G250
	94 - 47										
AN894D6-4	93 - 92	9							R	4730-188-8029	G250
	94 -154										
	94 -162										
	122 - 45										
	124 - 38										
	125 - 56	1									
	152 - 19										
AN9-11	342 - 55										
AN9-11A	362A- 25	8									
	364 - 44										
AN9-13A	362A- 18	4									
	365 - 2										
AN9-14A	365 - 39	4									
AN9-16	PG. 1009	4									
AN9-16A	116 - 35	8							R	5306-180-1511	G825
AN900-34	118 - 6	2							P	5330-199-5898	GB90
AN901-10A	223	1							P	5310-196-6680	GB90
AN901-12A	352	1							P	5310-196-6685	GB90
AN901-4A	320	8							P	5310-196-6676	GB90
AN901-5A	352 - 31	6							P	5310-196-6677	GB90
AN901-6A	158	2									
AN911-1D	352 - 17	1							P	4730-186-7783	G250
AN913-1	118 - 8	3							R	4730-188-3509	G250
	351										
AN916-816L	33 - 17	2									
AN917-1D	352 - 18	1							R	4530-287-3699	G250
AN919-10D	95 -185	1							R	4730-188-8027	G250
AN919-12D	93 - 97	6							R	4730-187-3585	G250
	93 -105										
	94 -107										
	94 -178										
	108 - 5										
	339 -123										
AN919-6		3									
AN919-6D	93 - 85	2							R	4730-187-3580	G250
	93 -146										
	94 - 85										
	94 - 89										
	94 -158										
	94 -177										
AN924-10D	93 - 51	4							R	4700-C00-3963	G250
	94 - 49										
	124										
	126										
	127										
	152 - 34										
AN924-12D	93 - 33	13							R	5310-433-3206	G250
	94 - 31										
	95 - 31										
	97 - 26										
	100 - 70										
	125										
	352										
	353										
AN924-3D	353	3							R	5310-266-0498	G250
AN924-4	123	28							R	5310-282-9550	G250
	162										
	163										
	164										
	273										
	321										
	322										
	349										
	349	3									
	349	1									
	350 - 22										
	351										
	353 -140										
AN924-4D	93 - 88	75							R	5310-208-5304	G250
	94 -150										
	122 - 44										
	123 - 62										
	123 - 82										
	124 -111										
	125 - 53										
	126										
	127										
	129										
	136										
	143 - 77										
AN924-5D	352 - 32	3							R	5310	
	354 - 36										
AN924-6	95	14							R	5310-282-7817	G250
	97										
	122										
	123										
	153										
	154										
	320										
	321										
	322										
	358										
AN924-6D	43 - 54	86							R	4700-C00-3961	G250
	93 - 71										
	93 - 82										
	93 - 94										
	94 -124										
	94 -127										
	94 -156										
	94 -164										
	94 -175										
	94 -186										
	123 -113										
	125 - 54										
	143										
AN924-62		1									
AN924-8	137 - 81										
	137 - 97										
	358										
AN924-8D	93 - 46	11							R	4700-C00-3962	G250
	94 - 54										
	94 -167										
	136 -101										
	137										
	153 - 35										
	154	1									
	154 - 36										
	154 - 36	1									
	355 -144										
	358										
	PG. 1013										
AN924D10	223	1									
AN924D4	PG. 1013	1									
AN924D6	126	6									
	127										
	156 - 1										
	163										
AN926-4D	350 - 24	1							P	4730-277-5154	G250
AN926-6		2									
AN926-6D	139 - 17	1							R	4730-277-5024	G250
AN927-4	63 - 23	2							R	4730-230-8714	G250
AN927-4D	152 - 35	1							R	4730-277-2454	G250

PART NUMBER	FIGURE AND INDEX	TOTAL QTY.	MICRO-FILM NUMBER	MAINTENANCE CODE DATA: SOURCE CODE	INSTL CAPABILITY	PRE-INSTL CAPABILITY	RECOVERABILITY	SUPPORT EQUIPMENT	FEDERAL STOCK NUMBER DATA: COGNIZANCE CODE	FEDERAL STOCK NUMBER	MFG. CODE (TSMC)
AN929-12	100 - 71	2									
AN929-4	219	4							R	4730-278-5006	G250
	357										
AN929-4D		2									
AN929-6	43 - 55	5							R	4730-377-6539	G250
	94 -123										
	94 -130										
	94 -188										
AN929-8	355 -125	1							R	4700-C00-3729	G250
	PG. 1013										
	PG. 1022										
AN931-16-22		1									
AN931-3-5	232	4							R	5325-531-1808	GB90
	270 - 91										
AN931-5-9	213 - 39	4							R	5325-249-6340	GB90
	311 - 32										
AN931A12-23		2							R	5325-263-6648	GB90
AN931A8S13	63 - 9	1									
AN932-2	30 - 37	2							R	4730-278-3462	G250
AN932-4D	141 - 92	1									
AN933-6D		2									
AN935-CL		2									
AN935-10	84 - 66	24							R	5300-C00-9685	G192
	118 - 9										
	298 - 16										
AN935-10L	179 - 4	6							R	5310-167-0662	G192
	264 - 30	2									
	264 - 52	4									
AN935-4	219	4									
AN935-4L	93 - 22	1							R	5310-167-0694	G192
AN935-416L	264 - 25	6									
AN935-6	223	4							R	5310-639-2039	G192
AN935-6L	95 -134	5							R	5310-167-0696	G192
	97 -155										
	241										
	271 - 31										
AN935-616	234 - 78	6							R	5310-167-0674	G192
	235 - 77										
	238 - 16										
	298 - 13										
AN935-716L	362	1							R	5310-167-0675	G192
	364 - 28										
AN935-8L	213 - 68	4							R	5310-167-0659	G192
	264 - 48	2									
	276										
AN935-816L	360 - 15	2							P	5310-167-0677	G192
AN935B10	297 - 8	3							P	5310-167-0669	G192
AN935B416	274 - 19	8							R	5310-184-8970	G192
	274 - 26										
AN935B6		2									
AN935B616	234 - 1	10							R	5310-184-8971	G192
	235 - 1										
	279 - 1										
	297 - 5										
	298 - 25										
	298 - 30										
	298 - 35										
AN935B616L	234 - 97	2									
	235 - 96										
AN936-A6		2									
AN936-A8		4									
AN936-D8L		6									
AN936-48		4									
AN936A10	219	4							R	5310-167-0878	G192
AN936A1016	287	16									
AN936A2		2							R	5310-167-0873	G192
AN936A4	284	4							R	5310-167-0875	G192
	285										
	287										
AN936A416	278 - 21	1							R	5310-167-0719	G192
AN936A416B	303	4							R	5310-167-0856	G192
	304										
AN936A6	102 - 96	16							R	5310-167-0876	G192
	102 -123										
	103 - 84										
	109 -131										
	112 - 29										
	221 - 34										
	234 - 71										
	235 - 70										
	330 - 24										
	330 - 26										
AN936A6R	251 - 30	60							P	5310-638-5389	G192
	287A										
	337										
AN936A616B	234 - 12	8							R	5310-167-0858	G192
	235 - 12										
	279 - 12										
	303										
	304										
AN936A7168D		1									
AN936A7168S	315	1									
AN936A8	122	4									
	212										
	221 - 37										
	270 - 58										
AN936A816	205	1							P	5310-264-1341	G192
AN936B10		4							R	5310-167-0869	G192
AN936B16B	234 - 1	1							R	5310-264-1341	G192
AN936B48		4									
AN936B416	210 - 14	2							R	5310-167-0870	G192
AN936B6	210 - 17	3							R	5310-167-0867	G192
AN936B616B	235 - 1	1									
	279 - 1										
AN936DL8	270 - 22	6									

PART NUMBER	FIGURE AND INDEX	TOTAL QTY.	MICRO-FILM NUMBER	MAINTENANCE CODE DATA: SOURCE CODE	INSTL CAPABILITY	PRE-INSTL CAPABILITY	RECOVERABILITY	SUPPORT EQUIPMENT	FEDERAL STOCK NUMBER DATA: COGNIZANCE CODE	FEDERAL STOCK NUMBER	MFG. CODE (TSMC)
AN936D10		4							R	5310-197-3137	G192
AN936D4		9									
AN937D4	326 - 7	1							R	4730	
AN937D8	136 - 45	4							R	4730	
	136 -104										
	137 - 56										
AN938-8	137 - 85	1							R	4730-277-5056	G250
	358										
AN938-8D	94 -180	1									
AN938D4	152 - 20	2							R	4730-277-5157	G250
	158 - 10										
	322 - 37										
AN938D6	122 - 59	7							R	4730-277-5026	G250
	123 -117										
	126 - 22										
	127 - 22										
	127 - 90										
	152 - 14										
	153 - 41										
	154 - 42										
	163										
	358										
AN938D8	136 -105	3							R	4730-277-5055	G250
	137 - 50										
	163										
AN939-12D	355	1									
AN939-4	320	2							R	4730	
	322										
AN939-4D	126	2									
	127										
	143 - 75										
AN939-5D	321 - 3	1									
AN939-6D	124	2									
	127 - 76										
	136										
	137										
	355										
AN939-8D	355	1									
AN939D12	126 - 2	5							R	4730-277-2461	
	127 - 2										
	136										
	PG. 1019										
	PG. 1027										
AN939D4	124 - 41	13							R	4730-278-3682	G250
	124 -109										
	141 - 91										
	141 -102										
	142										
	143	1									
	144										
	150 - 41										
	163 - 62										
	163 - 69										
AN939D5	323 - 14	1							R	4730-277-2456	G250
AN939D6	126 - 9	4							R	4730-278-3689	G250
	127 - 9										
	138										
	152 - 12										
	PG. 1019										
	PG. 1022										
	PG. 1027										
AN939D8	122	4							R	4730-277-2458	G250
	123										
	136										
	150 - 13										
	355										
	PG. 1019										
	PG. 1022										
AN941-12D	355	1									
AN941-6D	126	1							R	4730-277-2457	G250
	127										
AN941-8D		1									
AN941D12	124 -124	1							R	4730-277-6430	G250
	PG. 1019										
	PG. 1022										
	125										
AN941D4	144	5							R	4730-277-6429	G250
	164 -113										
	357										
AN941D6	124	1							R	4730-277-2457	G250
AN941D8	136	1							R	4730-640-5052	G260
	137										
	324 - 15										
AN944-101	40 - 5	29							R	4730-255-2689	
	40 - 8										
	66 - 4										
	66 - 47										
	67 - 17										
	71 - 39										
	75 - 55										
	78										
	84 - 3										
	160 - 20										
AN944-101-100	186 - 23	1									
AN944-201	86 - 59	9									
	160 - 7										
	184										
AN944-301	36 - 19	7							R	4730-222-0981	
	66 - 48										
	84 - 82										
	186 - 68										
AN945-4D		1									
AN945-4P	23	8									
	98										
AN96B10	341 - 34	1									

PART NUMBER	FIGURE AND INDEX	TOTAL QTY.	MICRO-FILM NUMBER	MAINTENANCE CODE DATA: SOURCE CODE	INSTL CAPABILITY	PRE-INSTL CAPABILITY	RECOVERABILITY	SUPPORT EQUIPMENT	FEDERAL STOCK NUMBER DATA: COGNIZANCE CODE	FEDERAL STOCK NUMBER	MFG. CODE (TSMC)
AN960D10L		16									
AN960-D10	35 - 85	2									
AN960-10	298 - 17	3									
AN960-10L	29 - 28	3							R	5310-167-0834	G192
AN960-1016	26 - 23	8							R	5310-167-0825	G192
AN960-1416	26 - 51	3							R	5310-167-0827	G192
AN960-1616	26 - 9	4							R	5310-167-0828	G192
	26 - 36										
AN960-3L		2							P	5310-167-0830	G192
AN960-4		2							P	5310-167-0815	G192
AN960-416	26 - 41	1							R	5310-167-0819	G192
	26 - 46										
AN960-416L		5							R	5310-167-0835	G192
AN960-428	50	4									
AN960-516		2							R	5310-167-0820	G192
AN960-516L		1							R	5310-167-0836	G192
AN960-616	27 - 26	23							R	5310-167-0821	G192
	33 - 18										
	298 - 14										
AN960-616L		4							R	5310-167-0837	G192
AN960-716		1							R	5310-167-0822	G192
AN960-716L		1							R	5310-167-0838	G192
AN960-8L		4							R	5310-167-0833	G192
AN960-816L		1							R	5310-167-0839	G192
AN960CU13	95	2							R	5310-167-0791	G192
AN960CV13	97	2									
AN960C10L	34 - 26	4							R	5310-167-0812	G192
AN960C413		2									
AN960C516		16							R	5310-167-0803	G192
AN960C6		2							R	5310-167-0799	G192
AN960C6L		4									
AN960C816		1							R	5310-167-0806	G192
AN960DA		2									
AN960D10	35 - 23	150							R	5310-167-1723	G192
	35 - 51										
	38										
	39										
	50 - 40										
	59 - 44										
	67 - 14										
	78 - 73										
	118										
AN960D10L	34 - 9	131							R	5310-167-0752	G192
	34 - 21										
	34 - 34										
	35 - 38										
	35 - 68										
	38 - 41										
	41 - 36										
	41 - 56										
	50										
	59 - 40										
	116										
	PG. 1004										
	222										
	251										
AN960D3	71	2							R	5310-167-0736	G192
	203 - 17										
AN960D4	203 - 13	98							R	5310-167-0737	G192
	PG. 1003										
	PG. 1004										
AN960D416	36 - 24	72							R	5310-167-0740	G192
	36 - 37										
	39 - 6										
	41 - 63										
	43										
	65 - 35	2									
	78 - 64										
	200 - 61										
	225 - 23										
	225 - 67										
	259 - 65										
AN960D416L	34 - 16	8							R	5310-167-0754	G192
	35										
	43 - 5										
	225 - 26										
	355										
	PG. 1016										
	PG. 1024										
AN960D428	50	16									
AN960D516	38 - 27	61							R	5310-167-1724	G192
	38 - 30										
	50										
	59										
	59A										
	200 - 56										
	200 - 56	1									
AN960D516L	52 - 17	58							R	5310-167-0755	G192
	59										
	59A- 66										
AN960D6	41 - 60	4							R	5310-167-0738	G192
	41 - 70										
	53 - 27										
	53 - 32										
	59 - 12										
	61 - 16										
AN960D616	39 - 8	5							R	5310-167-1729	G192
	64 - 35										
	78 - 60										
AN960D716	PG. 1015	2							R	5310-167-0741	G192
	PG. 1023										
AN960D716L	26 - 17	1							R	5310-184-8986	G192
AN960D8	273	13							R	5310-167-0739	G192
	274										
	355										

PART NUMBER	FIGURE AND INDEX	TOTAL QTY.	MICRO-FILM NUMBER	MAINTENANCE CODE DATA: SOURCE CODE	INSTL CAPABILITY	PRE-INSTL CAPABILITY	RECOVERABILITY	SUPPORT EQUIPMENT	FEDERAL STOCK NUMBER DATA: COGNIZANCE CODE	FEDERAL STOCK NUMBER	MFG. CODE (TSMC)
	PG. 1016										
	PG. 1024										
	PG. 1025										
AN960D8L	44	1							R	5310-184-8987	G192
AN961-10	297 - 9	6							R	5310-264-1390	G192
AN961-4		4									
AN961-416	295	4							R	5310-194-0635	G192
	304										
AN961-6	251 - 31	60							R	5310-194-0634	G192
	287A										
	357										
AN961-616	234 - 1	10							R	5310-187-2413	G192
	235 - 1										
	279 - 1										
	297 - 6										
	298 - 23										
	298 - 28										
	298 - 34										
	304										
	353										
AN961-8	71	4							R	5310-264-1389	G192
AN961-816		2									
AN966-18	180 - 8	1									
AN970-3	65 - 13	9							R	5310-167-0765	G192
	328 - 55										
	328 - 59										
AN970-4	191 - 63	4							R	5310-167-0766	G192
	191 - 73										
	192 - 42										
	192 - 52										
AN975-1-6A	58 - 3	2									
AN975-3	45 -111	16							R	5310-167-0685	G192
	45 -154										
	68 - 19										
	75 - 65										
	83 - 30										
	194 - 9										
AN975-5	21	4							R	5310-167-0687	G192
AN995C32-12		2									
AN995C41		5									
AN995F41		1									
AN995F47		1									
AN995N40	355 - 17	AR									
AN996-12	PG. 1007	1									
AN996-18	175 - 26	1							R	5340-257-0209	P130
AR6-1	64 - 24	1									
AS-578/ARA-25	209 - 12	1									
AS-578A/ARA-25	209 - 16	1							R	5826-524-4363	FANN
AS-786/A		1									
AS578/ARA25		1									
AT-229/APG-30	213 - 64	1									
AT-233/APG-30		1							R	5983-318-1296	FANN
AT-234/APX	122 - 4	1									
	212 - 4										
AT-488/APG-30		1									
AT-561/APG	213 - 64	1							R	1270-636-3992	FANN
AT-571/A		1							R	5826-524-6625	FANN
AT-6	64 - 40	21									
	64 - 87										
AT-7	45 -117	2							R	3110-108-7468	G730
AT-719	355 -102	1		P					R	1560-336-2644	X110
	PG. 1013										
	PG. 1022										
AT208-2	209 - 32	1		P1					R	1660-505-8163	X110
	353 - 29										
AT209-2		1									
AV168-1197D	111 - 21	1							R	1650-511-2046	YGCO
AV168-1307D	111 - 21	1		P1	F	O	R		R	2915-640-1016	YGCO
	249 - 18										
	250 - 22										
AV168B1307D		1							R	2915-640-1016	YGCO
AV2A-1390B		1							R	4820-032-7896	YGCO
AW-1-1/2-12-AF-11	84 - 70	1									
AW-3-1/2-T50		2									
AW-3-1/2-T53		2							R	5325-297-9637	GH80
AW1-1/2-12AF11		1							R	6685-663-5269	VGAR
AW3-1/2T50	PG. 1005	1									
AW3-1/2T53	PG. 1005	1									
AYLH53235		1									
AYLZH53235		1		P1					R	5845-500-6569	D334
AYLZH53235	270 - 15	1									
	270 - 41										
A1214	PG. 1007	1									
A12382	354 - 49	1									
A12918	354 - 18	1									
A13-141	96	1									
	102										
	103										
A1663-022-1	328	2		M		O			R	1620-697-2593	X110
A17397		1							R	5930-669-8104	D334
A1921	281 - 10	1									
	282 - 6										
A2500-048		57							R	5310-638-2028	G190
A3074R	262 - 9	1		P1					R	5930-501-2293	D334
	288 - 15										
A3122-16	223 - 16	5							R	4730-278-0428	GH80
	223 - 20										
	223 - 30										
A3122-16-59		7									
A3122-6		1									
A3122-8	219	4									
A3122-8-59		4							R	4730-289-5667	GH80
A323	PG. 1003	1									
A3235-SS-020	75 - 11	8									
A3235-020SS		16									

PART NUMBER	FIGURE AND INDEX	TOTAL QTY.	MICRO-FILM NUMBER	MAINTENANCE CODE DATA: SOURCE CODE	INST'L CAPABILITY	PRE-INST'L CAPABILITY	RECOVERABILITY	SUPPORT EQUIPMENT	FEDERAL STOCK NUMBER DATA: COGNIZANCE CODE	FEDERAL STOCK NUMBER	MFG. CODE (TSMC)
A3475-020		2									
A3475-020-24A	88	2							R	5310-639-7423	G192
A3613	178	3							R	5310-373-5513	X110
A393-31	62 - 21	1									
A4-5/E4-2	284 - 67	1									
A4-5E4-2		1							R	5930-258-5803	D334
A407		1							R	5340-370-4096	GH80
A4139-4		1							R	6220-519-0751	D336
A4139-5		1							R	6220-519-0729	D336
A4139-6		1							R	6220-519-0730	D336
A4950-A		2							R	6720-299-5894	DGMC
A520-10R10	209	14									
A5222		1							R	1680-438-2481	X110
A5299-24		1									
A5885-327	284 - 64	2									
A5890		7							R	5210-283-9614	D336
A5928-2		1							R	5340-634-7882	GH80
A5929-1		1							R	5300-C01-2164	GH80
A60156	134 - 62	1									
A6020-8	136 - 40	1									
	137 - 42										
A605		1		M		O			R	5340-514-2486	GH80
A627	366 - 17	7									
A6329	193 - 53	8		P1	F	O	S				
	205 - 12										
A6338		30		P1	F	O	C		R	1680-370-8509	X110
A6745-24		1							R	6220-548-0196	D336
A6815-24	315	2									
A6912-831-1	49 - 14	1									
A6912-832-1	39	1							R	2640-433-0571	GH80
A6938-632		4									
A6939-632-.375	152 - 39	4							R	5310-208-3466	G190
A6939-632-20A		4									
A6939-632-24A	315 - 61	91									
	315 - 71										
	315 - 76										
	318										
A6989		5							R	4710-639-9573	X110
A7000-24-810	96	3									
	102										
	103										
A7033	205 - 6	1									
A7038-1	205 - 4	1									
A7079-24		1									
A7236090	328 - 4	4									
A7505-24		1		P1	F	O	S		R	6220-500-2434	DGMC
A8-229	PG. 1017	2							R	4730-289-8391	G290
	PG. 1025										
A8-501	PG. 1017	2									
	PG. 1025										
A8069	284	1							R	5355-600-6007	DGMC
A823	PG. 1007	1									
A8938-632-.062		4							R	5310-208-3467	G190
A8938-632-24A	276 - 13	8									
A8939-632-.091	322	4									
A8943-632-.375	322	4									
A8944-632		4									
A9-4		1							R	5930-098-4987	D444
A9169-1	284	1									
A9171-1	284 - 70	1									
A9172-1	284	1									
A9173-1	284	1									
A950-004-12-80-0230		2									
A9810-1		1		P1	F	O	C		Q	5930-594-7133	D334
B/MBEU/10300	57A- 1	1									
B-1112	83 - 37	1									
B-112	83	1									
B-118	83 - 33	1									
B-4	175 - 53	1									
B-4789	256 - 17	1							R	6220-212-7888	D336
	315										
	318										
B-4876-R		1							R	6210-396-0037	DGMC
B-4876R	256 - 31	1									
B-55	341	2		M		O					
B-61447-A		2		M		O			R	5945-502-2897	D334
B-61477-A	341 - 43	1									
B-63952-001	341	1									
B-6600	256 - 10	6							R	6210-300-3550	DGMC
	256 - 11										
	256 - 29										
	264										
	315										
B-6601	256 - 14	3							R	6210-300-3551	DGMC
	256 - 20										
	256 - 21										
	315										
	318										
B-6602	256 - 12	1							R	6210-026-9993	DGMC
	315										
B-6603	205 - 14	2		P1					R	6210-300-3553	DGMC
	256 - 9										
	315										
	318										
B-6606	256 - 16	1							R	6210-300-3554	DGMC
	315 - 78										
B-6620		1		P1	F	O	S		R	6210-300-3555	DGMC
B-6621	256 - 15	3							R	6210-300-3556	DGMC
	256 - 18										
	256 - 22										
	315 - 64										
	318										
B-6771		1							R	6210-513-2629	D336
B-68	51 - 14	2									
B-68-POH	17 - 48	4							R	3110-227-3591	G730

PART NUMBER	FIGURE AND INDEX	TOTAL QTY.	MICRO-FILM NUMBER	MAINTENANCE CODE DATA: SOURCE CODE	INST'L CAPABILITY	RE-INST'L CAPABILITY	RECOVERABILITY	SUPPORT EQUIPMENT	FEDERAL STOCK NUMBER DATA: COGNIZANCE CODE	FEDERAL STOCK NUMBER	MFG. CODE (TSMC)
	17 - 50										
	19 - 32										
B-701	328 - 20	4		P1	F	O	S		R	1005-216-2968	B210
	328 - 21										
B-78		2		M		O			R	5940-187-5128	D336
B-78-POH	19 - 10	1							R	3110-277-0428	G730
B-8720R	256	1									
B-8725	256 - 13	1									
	318										
B-8728	256	1									
	318										
B-8729	318	1		P	F	O	S				
B-95		2									
B-95P		2							R	3110-227-3591	
B-9685-1	235 - 15	1									
BA-7R01T		1									
BD6-2		2							Q	5940-031-2663	
BG-11510-C		1									
BG29A-1	264 - 64	1									
BG29A-3		1									
BG29B-1		1									
BG29B-3	266 - 11	1									
BL-CL-5-.500R		2									
BL-CL-5-0.500R	122	2									
	212										
BL-CL-6-0.700		1		P1							
BL-CL-6-0.800	264 - 14	1									
BL-CL-6-0-800		1							R	5340-535-9567	GH80
BL-H-6-0.500R	365 - 17	1									
BL-HG-4-1.400	348	1									
BL-HG-6-4813		1									
BL-HG-6-5.125	334 - 30	1									
BL-H6-8-10.250	334 - 91	1									
BL-PP-3-4.000	PG. 1003	1									
BL-SL-7-1.625R	365 - 43	1									
	365 - 51										
BL-ST-4-1.400	347	1									
	348 - 45										
BL-ST-5-0.812		1									
BL-ST-5-0.812R	362A- 32	1									
	364 - 8										
BL-ST-8-1.00	PG. 1009	2									
BL-ST-6-2.100R	366 - 45	2									
BL-ST-7-0.800		2									
BL-ST-7-0.800R	364 - 20	2									
BL-ST-8-0.875R	362A- 8	2									
BL-ST-8-2.100R	366 - 61	2									
BL-ST-8-2.800R		2									
BL-ST-8-4.400R	366 - 26	2									
BL-ST4-2.200R	366 - 39	2									
BL-ST5-1.300R	366 - 2	2									
BL-1032-9		1									
BL-10332-13	355 - 25	1									
	PG. 1013										
BL-10332-15	355 - 26	1									
	PG. 1013										
BL-10332-17	355 - 24	1									
	PG. 1013										
BL-10332-19	355 - 23	1									
	PG. 1013										
BL-10332-3	355	1							R	1680-098-2357	X110
	PG. 1013										
BL-10332-5	355	1							R	1680-098-2358	X110
	PG. 1013										
BL-10332-7	355	1							R	1680-098-2359	X110
	PG. 1013										
BL-10332-9	355	1							R	1680-098-2360	X110
	PG. 1013										
BL-10615-13	355 - 20	1									
	355 - 22										
	PG. 1013										
BL-10615-15	355 - 19	1									
	355 - 21										
	PG. 1013										
BL-10615-3	355	2							R	1680-098-2361	X110
	PG. 1013										
BL-10615-5	355	1							R	1680-333-7811	X110
	PG. 1013										
BL-10883-3	355	1									
BL-10883-13	355	1		P1	F	O	S		R	1680-606-3730	X110
	PG. 1013										
BL-10883-15	355	1							R	1680-590-7463	X110
	PG. 1013										
BL-10883-17	355	1		P1	F	O	S		R	1560-613-9476	X110
	PG. 1013										
BL-10883-19	355	1		P1	F	O	S		R	1680-606-3729	X110
	PG. 1013										
BL-10883-3	355	1		P1					R	1680-698-2685	X110
	PG. 1013										
BL-10883-5	355	1		P1					R	1680-698-2686	X110
	PG. 1013										
BL-10883-7	355	1		P1					R	1680-698-2687	X110
	PG. 1013										
BL-10883-9	355	1		P1					R	1560-568-5162	X110
	PG. 1013										
BL-3-2.1875R	PG. 1007	1									
BL-4-.500		1		P1							
BL-4-0.500	333 80	1									
BL-4-0.700	61 - 22	1							R	5340-526-1470	GH80
BL-4-1.000	363 - 22	2									
	363 - 50										
BL-4-5.160	335 - 75	1									
BL-5-0.812	362 - 50	1									
BL-5-1.700	PG. 1003	1									
BL-6-1.100	360 - 28	2									

PART NUMBER	FIGURE AND INDEX	TOTAL QTY.	MICRO-FILM NUMBER	MAINTENANCE CODE DATA: SOURCE CODE	INSTL CAPABILITY	PRE-INSTL CAPABILITY	RECOVERABILITY	SUPPORT EQUIPMENT	FEDERAL STOCK NUMBER DATA: COGNIZANCE CODE	FEDERAL STOCK NUMBER	MFG. CODE (TSMC)
BL-6-4.750	360 - 4	1									
BL-7-0.875	363 - 7	2									
BL-7-1.125	362 - 8	2									
	363 - 6										
BL-7-1.625	363 - 21	2									
BL-8-10		10							R	5320-291-0403	G191
BL-8-10.250		1									
BL-8-11		11							R	5320-637-6085	G190
BL-8-13		1							R	5320-141-2726	G191
BL-8-2.300	PG. 1003	1									
BL-8-4		4							R	5320-030-1707	G190
BL-8-5		4									
BL-8-6		4									
BLR-6445GC		4									
BLR6445GC	80 - 3	1									
	80 - 7										
BLX-32-1	59A- 85	3									
	63 - 4										
BLX-7752		1									
BLX32-1		2									
BL10883-19		1		P1	F	0	S		R	1680-606-3729	X110
BL8-10	78 - 43	2									
BL8-11	78 - 44	2									
BL8-4	20 - 4	2									
BOS-5-18-123	223 - 27	1							R	1660-590-0856	X110
BRA-5	12 - 18	6									
	12 - 28										
	12 - 34										
BRA-8-OH	362	4									
BSR16000GC	26 - 40	1									
	27 - 3										
BSR19000GC		4									
BSR4000C	26 - 20	1									
BS51156		1		M		0					
BUORD1207111		4		M		0					
BZ-2RW-T8225	270 - 96	1									
BZ-2RW-T8255		1									
BZ-7RQ1T	271 - 44	1									
	278 - 29										
B11114	354 - 17	1									
B1118		1							R	3110-277-0430	
B11240	205 - 5	1									
B11242-2	205 - 8	1									
B11253	354 - 1	1									
B11537	354 - 2	1									
B118P		1							R	3110-271-0005	
B3457		1							R	6220-376-2193	DGMC
B4-22-A-50RN	PG. 1003	1									
B4-22-Z-50RN		1									
B4600F 1/2 MM		1							R	5330-202-4861	GB90
B538	51 - 26	2									
B6602	205 - 14	1									
B6771-1		1							R	6210-513-2629	D336
B6771-2		1							R	6620-284-0407	D336
B8720R	318	1		P1	F	F	C		R	6220-600-1965	DGMC
B8725		1		P1	F	0	C		R	6220-602-4211	DGMC
B8728		1		P1	F	0	C		R	6220-589-1340	DGMC
B9685-1		1		P1	F	F	C		R	6220-600-5006	DGMC
C/2612/AWW-1	286A	1									
C-10FA-548	257 - 3	1									
C-1015/ARC-27A	209 - 1	1							R	5821-563-0322	FANN
C-1150/APX-6B		1									
C-1159/APX-6B	207 - 8	1							R	5840-091-0470	FANN
	208 - 8										
C-1272/APA-89	207 - 7	1							R	5840-323-0226	FANN
	208 - 7										
C-1763/ARN-21A	211 - 1	1									
C-3519	210 - 29	1							R	5945-502-4072	D444
C-38-01	231	1									
	350 - 87										
C-760B/A	208 - 5	1							R	5985-041-1166	FANN
	210 - 1										
C-775/APG-30	207 - 2	1							R	5840-036-6391	FANN
	208 - 2										
	213 - 25										
CA-3106-RR-28-125		1									
CA06BR28-15P		1		P1	F	0	C		R	5935-549-3836	D336
CA18933-2007	286A	1									
CB-47	316 - 73	2									
CB70B1EF106V		1									
CCA4300	98 - 80	2							R	4820-202-6014	G250
	99 - 96										
	99 -113										
	100 -199										
	100 -211										
	113 - 55										
	358										
CF-1	362	4									
CF14-125	95 - 79	2							R	5340-608-6320	GH80
	95 -127										
	97 - 78										
	97 -129										
CF14-150	93 - 58	4							R	5340-589-4318	G250
	94 - 60										
	95 - 37										
	95 - 71										
	97 - 31										
	97 - 71										
CF14-200	95 - 44	7							R	5340-608-6321	GH80
	95 - 52										
	97 - 39										
	97 - 41										
	97 - 43										
	97 - 49										
	97 - 51										

PART NUMBER	FIGURE AND INDEX	TOTAL QTY.	MICRO-FILM NUMBER	MAINTENANCE CODE DATA: SOURCE CODE	INSTL CAPABILITY	PRE-INSTL CAPABILITY	RECOVERABILITY	SUPPORT EQUIPMENT	FEDERAL STOCK NUMBER DATA: COGNIZANCE CODE	FEDERAL STOCK NUMBER	MFG. CODE (TSMC)
	99 - 15										
	100 - 31										
	103 - 14										
	103 -164										
CF14-21200	96 - 3	1									
CF14-250	95 - 55	3							R	5340-608-6322	GH80
	95 - 59										
	97 - 54										
	97 - 58										
	97 - 60										
CKL100V6C		30							R	5320-243-3958	G191
CM11029	247	1							R	5800-C02-9048	E222
	256 - 3										
	288										
	305 - 27										
	306 - 31										
CM11030	233	1									
	305 - 28										
	306 - 32										
CM15C300J	210 - 18	1		P1					R	1680-569-2281	X110
CM2430	116 - 15	2		P1					R	6110-093-5604	FANN
CN-112/APG-30		1									
CN112/APG-30	213 - 26	1									
CONTROL UNIT AERO 1B	311 - 23										
	311 - 24										
	311 - 25										
	311 - 26										
CONTROL UNIT AERO 2A	311 - 27										
	311 - 28										
	311 - 29										
	311 - 30										
	311 - 44										
	311 - 44	1									
	311 - 45										
	311 - 45	1									
	311 - 46										
	311 - 46	1									
	311 - 47										
	311 - 47	1									
CP54B4EF254M	270 - 19	1									
	270 - 45										
CP70B1EF106V	215 - 9	1							R	5910-161-4037	F632
	216 - 9										
	248 - 2										
	295 - 26										
CR-10-1	316 - 26	2									
CR1T8-4-4		1							R	5320-030-1794	G191
CTSBA2126P/R5K		1									
CTSBA2126P±R5K	207 - 3	1									
	208 - 3										
	213 - 15										
CTS409BA2126P±P		1									
CV-279/A9N	211 - 2	1							R	5800-C03-2212	FANN
CW155A/U		1									
CYZP204	270 - 25	1		P1					R	5945-500-6688	D334
	270 - 55										
C10FA-548	317 - 6	1									
	318 - 67										
C10620-1	193 - 62	1		P1	F	0	S		R	1680-569-2567	X110
C10620-2	193	1		P1	F	0	S		R	1680-569-2568	X110
	194 - 25										
C11-11100	98 - 11	2									
C11-11125	95 - 79	2							R	4730-305-1509	G260
	95 -127										
	97 - 78										
	97 -129										
	358										
C11-11150	93 - 58	1									
	94 - 60										
	95 - 37										
	95 - 71										
	97 - 31										
	97 - 71										
C11-11200	95 - 44	7							R	4730-698-0492	G260
	95 - 52										
	96 - 3										
	97 - 39										
	97 - 41										
	97 - 43										
	97 - 49										
	97 - 51										
C11-11250	95 - 55	3							R	4700-C00-4238	G260
	95 - 59										
	97 - 54										
	97 - 58										
	97 - 60										
	358										
C11-21100	98 - 11	2									
C11-21125	97 - 78	1									
	97 -129										
C11-21150	93 - 58	2									
	94 - 60										
	95 - 37										
	95 - 71										
	95 - 79										
	97 - 31										
	97 - 71										
C11-21200	95 - 44	7									
	95 - 52										
	96 - 3										
	97 - 39										
	97 - 41										
	97 - 43										

PART NUMBER	FIGURE AND INDEX	TOTAL QTY.	MICRO-FILM NUMBER	MAINTENANCE CODE DATA: SOURCE CODE	INSTL CAPABILITY	PRE-INSTL CAPABILITY	RECOVERABILITY	SUPPORT EQUIPMENT	FEDERAL STOCK NUMBER DATA: COGNIZANCE CODE	FEDERAL STOCK NUMBER	MFG. CODE (TSMC)
	97 - 49										
	97 - 51										
	99 - 15										
	100 - 31										
C11-21250	95 - 55	2									
	95 - 59										
C1159/APX-6B	122 - 14	1									
	212 - 12										
C1272/APA-89	122 - 13	1									
	212 - 11										
C155-25-12	122	9							R	4730-098-4274	G250
	123										
	125										
	136										
	355										
	PG. 1019										
	PG. 1022										
C155-25-16	137	1									
	355										
	PG. 1019										
	PG. 1022										
C155-25-6		1									
C155-25-8	122	6							R	4730-098-4273	G250
	123										
	125										
	136										
	137										
	355										
	PG. 1019										
	PG. 1022										
C1703/ARC-27A	208 - 4	1									
	209 - 1										
C1763/ARM-21A	207 - 6	1									
	208 - 6	1									
C38-01		1		P1	F	O	S		R	1660-601-7606	Y120
C6808-2	194 - 25	1		P1	F	O	S		R	1680-098-2384	X110
C6808-3	199 - 82	2		P1	F	O	S		R	1680-098-2385	X110
C720		4							R	1005-521-0974	B210
C7299-5	205 - 17	1		P1					R	3010-345-6925	X110
C755/APG30		1									
C7586-2		1							R	1680-098-2386	X110
C7744-24	193 - 41	2		P1	F	O	S		R	1680-098-2387	X110
C7855-6-200	215	1							R	5925-575-9351	D334
	216										
	234	1									
	235										
	303										
	304 - 34										
C883		1		P1	F	O	S		R	4520-031-2600	D444
C9284		2		P1	F	O	S		R	1680-098-2388	X110
C9397	184	2		P1					R	2995-338-1055	X110
	185										
	295 - 3										
C9398-206	184 - 1	1		P1	F	O	S		R	1680-601-0285	X110
	185 - 1										
	295 - 2										
C9398-208		1		P1					R	1680-569-9388	X110
C9398-235		2		P1	F	O	R				
D/M TYPE 312		1		P1					R	5800-C03-4247	F733
D-1830		2							R	1680-640-8846	X110
D-1830-1	178 - 26	2							R	1680-510-8215	X110
	178 - 27										
	243 - 14										
	244 - 12										
D-1830-2	178 - 26	2							R	1680-575-9482	X110
	178 - 27										
	243 - 14										
	244 - 12										
	270										
D-1840-1	270 - 79	1							R	1680-203-1664	X110
D-1840-2	190 - 11	1		P1	F	O	R		R	1680-203-1669	X110
	270 - 79	1									
D-1840-3		1							R	1680-569-2374	X110
D-1840-4	92 - 44	1							R	1680-640-8806	X110
	271 - 33										
D-1845-1		1									
D-1870	51 - 6	1							R	1680-333-7810	X110
	230 - 21										
D-1870-1	51 - 6	1							R	1680-589-6269	X110
	230 - 21										
D-1890	243 - 13	2							R	1680-640-8843	X110
D-1899-1		1							R	1680-640-8842	X110
D-1900	173 - 13	1		P1	F	O	R		R	1680-323-3446	X110
	173 - 14										
	178 - 1										
	178 - 2										
	243 - 12										
	244 - 10										
	244 - 11										
D-1900-2	173 - 19	1							R	1680-605-8289	X110
	173 - 14										
	173 - 15										
	178 - 1										
	178 - 2										
	178 - 3										
	243 - 12										
	244										
D-1900-3	173 - 14	1							R	1680-629-4160	X110
	173 - 15										
	178 - 3										
D-5730-5-24	241 - 12	2							R	6220-500-1185	D336
D-5730A5-24	241 - 12	2							R	6220-504-0497	DGMC
D-6270-1	241 - 55	1									
D-6975-1	241 - 13	1		P1					R	6220-284-0721	D336
D-7220B	224 - 11	1							R	6220-500-0511	D336
D-7220B-24	221 - 8	1									
D-7365-1-24		1							R	6620-500-0511	D336
D-7670-1	241 - 20	1		P1					R	6210-643-1157	D336
D-7670-2	241	1		P1							
D-8545-1	234 - 63	8		P1	F	O	C		R	6220-565-3526	DGMC
	235 - 62										
	245 - 4										
	256 - 37										
	258 - 4										
	262 - 5										
	267 - 7										
	288 - 5										
	290 - 4										
	291 - 11										
D-9880-1	269 - 26	1									
	269 - 41	1									
D-9880A-1	269	1									
DAC2279-1		1									
DA10757		1									
DA6-2		1							R	5940-031-2665	D446
DB6-2		1									
DIC2529		2		P1					R	5935-201-2860	D336
DIC2531		1							R	5935-665-7863	D334
DIC2532		3		P1		O	N		R	5900-C00-7721	D336
DIC2533		3		P1			O		R	5935-201-2836	D336
DIC2665		1		P1	F	O	S		R	1680-505-8336	X110
DMS8700-19S		2									
DPP4	182	2							R	3110-142-4434	G730
	183										
DSRP-4	128 - 78	4							R	3110-271-0011	G730
	180										
DT-2R-A7	224 - 5	1							R	5930-548-4586	D394
	225 - 73										
DW4	200 - 63	1		M		O			R	3110-158-6295	G730
DW5	180 - 22	2									
	180 - 49										
DY-84/ARM-14	210 - 33	1							R	5800-C03-2340	FANN
D100-328	209 - 44	1							R	1680-505-8163	X110
	352 - 46										
	353 - 23										
D13A003		1							R	1680-315-6195	YFLR
D13A003M		1							R	1680-564-6591	Y120
D1540-1		1							R	1680-203-1664	X110
D1640-4	270	1									
D1890	172 - 49	1									
D379	218 - 9	4							R	6130-635-2049	D336
	259 -268										
	308 - 15										
	308 - 16										
	309 - 13										
D6-1001-5L-3A	362 - 1	2									
D6083A-1	284	1									
D6085A-1	284	1									
D674648	PG. 1003	1									
D7220B24		1							R	6220-500-0511	D336
D7671-1		1							R	6220-564-1277	D336
D7671-2		1							R	6220-564-1278	D336
D7720B24		1									
D8-17531D		1							R	2915-602-0848	Y120
D8051		1		P1		O	C		R	1280-601-7561	B210
D8061A-1	284 - 63	1									
D8062A-1	284	1									
D8067A-1	284	1									
D8545-1		1							R	6220-565-3526	F632
D899853-1		2									
D899853-2		2									
E-13560	PG. 1020	1									
	PG. 1026										
E-54807-1		1									
EA-90002-8A	127 - 79	1									
EA90002-8		1							R	1650-561-3638	Y120
									R	1650-561-3638	Y120
EA774-A-1283		1									
EA774-B-1284		1									
EA774-C-1285		1									
EA774-D-1286		1									
EA804FMK-1474	247	1		P1	F	O	S				
EA804FMK1474		1							R	6680-569-3053	VTKM
EA804FML-1473	247	1		P1	F	O	S				
EA804FML1473		1							R	6680-569-3052	V170
EA805FMM-1472	247	1									
EA805FMM1472		1							R	6680-569-3055	V170
EA808FMN-1472		1		P1	F	O	S				
EA816-BAC-10		1									
EA816-BAC-9		1									
EA816CFC22		1									
EA856-AA-15-5	315 - 52	1		P1					R	6680-308-3024	VIZS
EA856-FAF-12		1									
EA856-FAF-19		1		P1	F	O	R				
EA856-FAF-20		1									
EA856-MCF-20		1									
EA856AA15-5	247	1									
EA856FAF-19	247	1							R	6680-314-2209	VJDE
EA856MFC-20	247	1							R	6680-587-7345	VJCX
	315 - 87										
	318 - 54										
EA856MFC-27	247	1									
	318										
EA858-FAF-19	315 - 53	1									
EA9103R		1									
EA9104		1									
EA9107R		1							R	5935-539-0322	V170
EA9107S		1									
EA9112		1									
EA922NM-1215F		2									

PART NUMBER	FIGURE AND INDEX	TOTAL QTY.	MICRO-FILM NUMBER	MAINTENANCE CODE DATA: SOURCE CODE	INSTL CAPABILITY	PRI-INSTL CAPABILITY	RECOVERABILITY	SUPPORT EQUIPMENT	FEDERAL STOCK NUMBER DATA: COGNIZANCE CODE	FEDERAL STOCK NUMBER	MFG. CODE (TSMC)
EA939-8-1		1							R	5340-338-1185	V170
EA939C5		1									
EA940-M-1211G		1									
EA940CM-1211		1		P1							
EA940CM-1947		1		P1					R	6680-663-8651	VUHA
EA940G-1211		1									
EA940G-1211F	247	1									
EA940G-1947F	247	1							R	6680	
EA940H-1211E	247 - 32	1									
EA940H-1947E	247 - 34	1									
EA940H-1947G		1									
EA941-DM-1214F		1									
EA941-FM-1213F		1									
EA941DM-1214F	247 - 36	1									
EA941DM-1214G		1									
EA941FM-1213F	247 - 37	1									
EA941FM-1213G		1									
EA941G-1214E	247	1									
EA941H-1213E	247	1									
EA992-AA-1216E		2									
EA992-AB-1217E		2									
EA992-AB-1219E		2									
EA992-AC-1218E		2									
EA992-AC-1220E		2									
EA992-GPL-1477		2									
EA992-KM-1216		2		P1	F	O	S				
EA992-LM-1218		2		P1							
EA992-LM-1220		2		P1	F	O	R				
EA992-NM-1215		2							P	6680-663-8676	VUHC
EA992-NM-1217		2		P1	F	O	R		R	6680-663-8658	VUHD
EA992-NM-1219		2		P1					R	6680-663-8666	VUHE
EA992AA-1216		2									
EA992AA-1216F	247	2									
EA992AB-1215E	247	2									
EA992AB-1217E	247	2									
EA992AB-1219E	247	2									
EA992AC-1218E	247	2									
EA992AC-1220E	247	2									
EA992GPC-1477		2									
EA992GPK-1479	247	2		P1	F	O	S		R	6680-569-3054	V170
EA992GPK-1481	247	2							R	6680-569-3056	V170
EA992GPL-1477	247	2							R	6680-569-3058	V170
EA992GPL-1478	247	2		P1	F	O	S		R	6680-569-3059	V170
EA992GPL-1480	247	2		P1	F	O	S		R	6680-569-3060	V170
EA992GPM-1476	247	2		P1	F	O	S		R	6680-569-3057	V170
EA992KM-1216F	247 - 14	2									
EA992LM-1218F	247 - 17	2									
EA992LM-1220F	247 - 19	2							P	6680	
EA992NM-1215F	247 - 15	2							R	6680	
EA992NM-1217E	247 - 16	2							P	6680	
EA992NM-1219F	247 - 18	2									
EB-048	12	836							R	5310-269-6797	G190
	14										
	15										
	16 - 5										
	16 -203										
	16 -224										
	18 - 19										
	18 - 54										
	18 - 76										
	18 -123										
	180 -176										
	180 -181										
	195										
EB-054	2	642							R	5310-269-6797	G190
	12										
	14										
	15										
	16 -225										
	18 - 73										
	18 - 85										
	18 - 88										
	18 -151										
	19 - 5										
	180 -140										
	180 -144										
EB-064	2	158							R	5310-275-0707	G190
	14										
	15										
	16 -154										
	16 -178										
	18 -188										
	23 - 13										
	23 - 26										
	24										
	25 - 68										
EB-070	14	2							R	5310-375-0705	G190
	16 -148										
	24										
EB-080	14	38							R	5310-433-1262	G190
	15										
	16 -191										
	16 -162										
	16 -165										
EB-098	32 - 15	8							R	5310-275-0709	G190
	89										
EB-108	32 - 5	4							R	5310-433-1263	G190
EB-126	70 - 1	2							R	5310-275-0708	G190
	358										
EB-144	89	2							R	5310-433-1264	G190
	91 - 23										
EC226	PG. 1004	AR									
ED602	182 - 75	1							R	1680-522-4618	X110
	270 - 77										
	358										

PART NUMBER	FIGURE AND INDEX	TOTAL QTY.	MICRO-FILM NUMBER	MAINTENANCE CODE DATA: SOURCE CODE	INSTL CAPABILITY	PRI-INSTL CAPABILITY	RECOVERABILITY	SUPPORT EQUIPMENT	FEDERAL STOCK NUMBER DATA: COGNIZANCE CODE	FEDERAL STOCK NUMBER	MFG. CODE (TSMC)
EG70A6	262 - 10	1		P1	F	O	R		R	6680-620-2762	VAKS
EM1400	56 - 46	1							R	1680-379-4596	X110
	60 - 19										
EM1400-1	56 - 46	1		P1					R	1680-320-2533	X110
	60 - 19										
	272 - 5										
EN-52-022-094-0750		1							R	5315-271-7511	GH80
EN-52-028-125-0375		1							R	5315-238-1584	GH80
EN-52-028-125-1062		1							R	5315-597-2502	GH80
EPG-211	196 - 47	1							R	5930-548-5581	D334
	226 - 7										
	281 - 9										
EPG-212	196 - 47	1		P1					R	5930-503-3933	D334
	226 - 7										
	281 - 9										
	282 - 5										
EQ-1293	26 - 34	1									
EQ-1294	26 - 35	1									
EQ1293		1									
EQ1294		1									
ES-054		3									
ETAW-4		11									
E1008	PG. 1005	3									
E1028	PG. 1004	1									
E13560	137 - 18	1		P1	F	O	R		R	1650-613-9479	ZVIK
E1572-3	PG. 1006	1									
E1572-5	PG. 1008	3									
E1572-7	PG. 1006	1									
E1581	PG. 1006	1									
	PG. 1008										
E1757-1		1		P1	F	O	R				
E1790	PG. 1008	7									
E1938-3	PG. 1005	1							R	1730-320-8143	SNAA
E1938-4	PG. 1005	1							R	1730-320-8144	SNAA
E1939-11	PG. 1005	1		P1	F	O	S		R	1730-320-8145	SNAA
E1939-12	PG. 1005	1		P1	F	O	S		R	1730-320-8147	SNAA
E1941	PG. 1005	1							R	1730-098-2442	SNAA
E1949-5	PG. 1008	3									
E1957	PG. 1005	1		P1	F	O	C		R	1730-098-2443	SNAA
E1959	PG. 1007	1	DJ101								
E1960	PG. 1007	1									
E1961	PG. 1003	1		P			S		R	1650-218-9366	SNAA
E1963	PG. 1007	1	DJ192								
E1964-11	PG. 1007	2	DJ238	P1			S		R	1730-320-8163	SNAA
E1965	PG. 1007	2	DJ239	P1			S		R	1650-218-9369	SNAA
E2089-11	PG. 1004	1		P	M	O	S		R	4920-575-5141	SNAA
E2127	PG. 1010	1		P			C		R	1560-315-5656	SNAA
E2196	PG. 1004	1									
	PG. 1010										
E2461	PG. 1010	2		P			S		R	1730-521-9628	SNAA
E2462	PG. 1010	1									
E2463	PG. 1010	1									
E2464	PG. 1010	2									
E2525	PG. 1007	2									
E2535	PG. 1005	1		P1			S		R	1730-560-2267	SNAA
E2535-11	PG. 1005	2		P1					R	1730-560-2268	SNAA
E2535-21	PG. 1005	2		P1					R	1730-560-2269	SNAA
E2535-3	PG. 1005	AR									
E2535-5		AR									
E2552	PG. 1005	1							R	1730-098-2445	SNAA
E2561	PG. 1007	2									
E2562	PG. 1007	1							R	1560-094-6498	SNAA
E2563	PG. 1007	1									
E2565	PG. 1007	1									
E2566	PG. 1007	1									
E2568	PG. 1007	1		P1			S		R	1560-303-8555	SNAA
E2569	PG. 1007	1									
E2581	PG. 1005	1							R	1500-C00-1927	SNAA
E2582	PG. 1005	4									
E2590	PG. 1006	1	DN125	P			S		R	1730-294-3603	SNAA
E2592	PG. 1006	1									
E2593	PG. 1006	1									
E2594	PG. 1010	1		P			S		R	1730-098-2446	SNAA
E2595	PG. 1010	1		P			S		R	1730-098-2447	SNAA
E2598	PG. 1007	1		P			S		R	1730-294-3602	SNAA
E2599	PG. 1008	1									
E2600	PG. 1008	1									
E2601	PG. 1008	1									
E2602	364 - 45	1	DR345								
E2605	360	1		P1			R		R	1730-320-8164	SNAA
	PG. 1005										
E2605-3	360 - 1	2							R	1730-098-2448	SNAA
E2605-5	360 - 2	1									
E2606-1	360 - 9	1									
E2606-2	360	1									
E2607	360 - 17	2									
E2608	360 - 8	2									
E2609-1	360 - 25	1									
E2609-11	360 - 26	1									
E2610	360 - 29	1									
E2611	360 - 37	1									
E2612	360 - 38	1									
E2613	360 - 22	2									
E2615		1									
E2615-3		1									
E2615-5		1							R	1730-098-2450	SNAA
E2617	PG. 1007	1									
E2618	360 - 24	2									
E2619	360 - 23	2									
E2623	360 - 14	2									
E2627	364 - 1	1	DR323								
	PG. 1007										
	PG. 1027										
E2627-3	364 - 48	2									
E2627-7	364 - 49	2									

PART NUMBER	FIGURE AND INDEX	TOTAL QTY.	MICRO-FILM NUMBER	MAINTENANCE CODE DATA: SOURCE CODE	INSTL CAPABILITY	PRE-INSTL CAPABILITY	RECOVERABILITY	SUPPORT EQUIPMENT	FEDERAL STOCK NUMBER DATA: COGNIZANCE CODE	FEDERAL STOCK NUMBER	MFG. CODE (TSMC)
E2628	361	2		P1			S		R	1730-037-2250	SNAA
	PG. 1003										
E2628-101	361	2		P1			S		R	4920-945-9428	SNAA
	PG. 1003										
E2628-11	361	1									
E2628-15	361 - 16	1									
E2628-17	361	2							R	1730-567-7914	SNAA
E2628-3	361 - 1	1									
	361 - 9										
E2628-7	361 - 3	1									
	361 - 11										
	361 - 17										
E2628-9	361	1							R	U730-037-2251	SNAA
E2629	PG. 1004	1		P			S		R	1560-512-8077	SNAA
E2630-1	PG. 1003	1		M		O			R	1680-370-4705	XABN
E2630-2	PG. 1003	1		M		O					
E2631	PG. 1004	1		P			S		R	1560-512-8078	SNAA
E2632	PG. 1005	2		P			S		R	1560-512-8079	SNAA
E2633	PG. 1005	1		P			S		R	1500-C00-1933	SNAA
E2634	PG. 1005	2		M		O			R	1680-091-1694	XABN
E2635	PG. 1004	2		P			S		R	1730-098-2451	SNAA
E2636	PG. 1005	2		P	F	O	C		R	1730-098-2452	SNAA
E2637-3	PG. 1005	2		P	F	O	C		R	1500-C00-1934	SNAA
E2639	PG. 1008	2		P1			S		R	1730-098-2453	SNAA
E2640	364 - 46	1	DR344								
E2640-15	364	2									
E2640-17	364	2									
E2641	PG. 1003	2		P			S		R	1730-037-2252	SNAA
E2642	PG. 1004	2		P			S		R	1730-037-2253	SNAA
E2643	PG. 1004	2							R	1730-037-2254	SNAA
E2644	PG. 1004	1							R	5120-521-0707	SNAA
E2645	PG. 1005	1		P1			S		R	1730-037-2255	SNAA
E2646	PG. 1005	2									
E2648	361 - 24	1									
E2649	361 - 13	1									
E2650	PG. 1004	1									
E2651	361 - 6	1		M		O			R	1730-037-2256	SNAA
E2652	361 - 4	1							R	1730-098-2454	SNAA
E2666	PG. 1005	1									
E2667	PG. 1005	1									
E2668	PG. 1005	1									
E2669	76	2									
E2672-11	PG. 1005	1		P1			S		R	1730-098-2455	SNAA
E2672-12	PG. 1005	1		P1			S		R	1730-098-2456	SNAA
E2673	PG. 1005	1									
E2674-11	PG. 1010	1									
E2675	PG. 1010	1	DQ107	P			C		R	5120-571-5452	SNAA
E2700	PG. 1007	1									
E2711-1	362 - 3	1									
E2711-11	362 - 6	1									
E2711-13	362 - 4	1									
E2711-2	362 - 9	1									
E2713	PG. 1007	1									
E2715	361 - 41	3							R	1730-310-5082	SNAA
E2716-3	361 - 32	1									
	361 - 38										
E2716-5	361 - 33	1									
	361 - 39										
E2716-7	361 - 34	1									
E2717	361 - 27	1							R	1730-310-5089	SNAA
E2718	361 - 28	1									
E2719-1	362 - 12	1									
E2719-2	362 - 11	1									
E2720	362 - 14	1									
E2720-7	362 - 15	2									
E2721	362 - 10	1									
E2722	362 - 16	4									
E2723	362	1									
E2724	PG. 1007										
	PG. 1027										
	362	1		P1					R	1730-305-1646	SNAA
E2725-1	362 - 18	2									
E2725-2	362	2									
E2726	362 - 2	1									
E2727	363	1	DP290	P1					R	4920-604-2693	SNAA
	PG. 1006										
E2727-201		1									
E2727-21	363 - 49	1									
E2727-31	363 - 1	1									
E2727-32	363 - 2	1									
E2727-41	363 - 20	1									
E2727-61	363 - 14	4									
E2729-3	363 - 43	2									
	363 - 71										
E2730-3	363 - 9	1									
E2730-4	363 - 10	1									
E2731-3	363 - 8	2									
E2733	363 - 52	1									
	365 - 32										
E2734	363 - 51	1									
	365 - 31										
E2735	363 - 57	2									
E2736	363 - 34	2									
	363 - 62										
E2737	363 - 28	2									
E2738	363 - 48	2									
	363 - 76										
E2739-1	363 - 29	1									
E2739-2	363	1									
E2741	363 - 19	2									
E2743-1	PG. 1010	1	DL201						R	5120-544-4539	SNAA
E2744	PG. 1010	1	DN297								
E2745	PG. 1010	1	DR343								
E2745-7	PG. 1010	1	DR343								
E2746		1	DN251	P			C		R	5120-571-5453	SNAA
E2746-11	PG. 1010	1									
E2747	PG. 1006	1	DN300	P			S		R	1730-571-5454	SNAA
E2748	PG. 1006	2									
E2749	361 - 21	1							R	1730-574-7490	SNAA
E2750	361 - 19	1	DR 77						R	1730-567-7903	SNAA
E2753	362	1									
E2754-1	362 - 23	1									
E2754-2	362	1									
E2755-1	362 - 42	1									
	362A- 20										
	364 - 42										
E2755-2	362 - 43	1									
	362A- 19										
	364 - 43										
E2756	362	2									
	364 - 24										
E2756-11	362 - 32	1									
	364 - 29										
E2757	362	2									
E2758	362	2									
E2759	362 - 37	2									
	364 - 34										
E2760	362 - 38	1									
E2761		1									
E2761-11	362A- 22	1									
	364 - 38										
E2762	362 - 52	1									
E2763	362 - 49	1									
	362A- 36										
	364 - 7										
E2764	362 - 48	1									
	362A- 35										
	364 - 6										
E2765	362 - 51	1									
	364 - 9										
E2765-3	362A- 33	1									
E2769	362 - 26	1									
	362A- 3										
	364 - 19										
E2770-3	362 - 50	1									
	364 - 25										
E2770-5	362 - 31	1									
	364 - 26										
E2771	362 - 47	1									
	362A- 37										
	364 - 2										
E2773	362 - 13	1									
E2774	PG. 1008	5									
E2775	PG. 1008	2									
E2801	PG. 1010	2									
E2804	PG. 1010	2									
E2812	PG. 1004	1									
E3555	PG. 1006	1									
E3567	PG. 1010	1									
E3579	PG. 1008	1		P1			S		R	1730-535-8742	SNAA
E3580	PG. 1008	1									
E3581	PG. 1008	1									
E3582	PG. 1008	1									
E3583	PG. 1005	1									
E3584	PG. 1005	1		P			C		R	1730-535-9672	SNAA
E3669-1	364 - 17	1	DR321								
E3669-2	364 - 18	1	DR321								
E3757	PG. 1010	1	DL233	P			C				
E3764	PG. 1003	1	DN269	P			C		R	1730-524-8297	SNAA
E3776	366 - 1	1	DJ123								
E3777	366 - 24	2									
E3789	366	1									
E3789-21	366 - 11	1									
E3789-31	366 - 9	1									
E3789-5	366 - 10	1									
	366 - 12										
E3792	366 - 25	1									
E3793	366 - 49	2									
E3794	366 - 65	2									
E3795		2									
E3796	366 - 57	2									
E3797	366 - 30	2									
E3798	366 - 40	1									
E3798-5	366 - 44	2									
E3799	366 - 21	1									
E3800	366 - 37	2									
E3802	366 - 36	2									
E3804	366 - 58	2									
E3805	366 - 53	2									
E3806	366 - 69	2									
E3807		2									
E3817	PG. 1006	2	DQ109								
E3819	366 - 59	2									
E3820	366 - 35	2									
E3829	366	1	DJ124								
	PG. 1008										
E3830	365 - 8	2									
E3836	365 - 38	2	DN101								
	PG. 1006										
E3837	365 - 1	1	DR185								
	PG. 1006										
E3837-13	365 - 26	2									
E3837-3	365 - 37	1									
E3837-5	365 - 16	2									
E3837-9	365 - 36	2									
E3838	365 - 44	1									
E3839	365 - 46	1									
E3840	365 - 50	1									
E3841	365 - 52	1									
E3842	365 - 42	1									

PART NUMBER	FIGURE AND INDEX	TOTAL QTY.	MICRO-FILM NUMBER	MAINTENANCE CODE DATA: SOURCE CODE	INST'L CAPABILITY	PRE-INST'L CAPABILITY	RECOVERABILITY	SUPPORT EQUIPMENT	FEDERAL STOCK NUMBER DATA: COGNIZANCE CODE	FEDERAL STOCK NUMBER	MFG. CODE (TSMC)
E3842-5	365	2									
E3843	365 - 49	1									
E3844	365 - 22	1									
E3845	365 - 48	1									
E3846	365 - 30	2									
E3847	365 - 12	2									
E5109-2		1		P1	M	O	R		R	6125-553-1625	D334
E6041	PG. 1004	2	DO 64						R	1730-098-2451	SNAA
E6042	PG. 1003	1	DP117						R	1730-600-2086	SNAA
E6045	PG. 1010	1							R	4920-590-8298	S110
E6046	PG. 1010	1									
E6076	365	1	DN102						R	1730-603-8463	SNAA
	PG. 1006										
E6084	PG. 1009	2	DN 20								
E6085	PG. 1009	1	DP169						R	1730-604-2692	SNAA
E6098		1							R	1730-606-0374	SNAA
E6107	PG. 1003	2	DN282	P			C		R	1730-600-2087	SNAA
E6124	PG. 1010	1									
E6400		1									
E6408	120	1									
E6409	120	2									
E6409-101	120	1									
E6411		1									
E6442	251 - 20	1							R	6645-031-2750	D444
E6449		1									
E6551	362A	1							R	1730-608-0948	SNAA
E6551-3	362A- 26	2									
E6552-1	362A- 6	1									
E6552-2	362A- 7	1									
E6553	362A- 1	1									
E6554	362A- 24	1									
E6555	362A- 2	2									
E6556	362A- 4	2									
E6557	362A- 28	2									
E6560	362A- 30	2									
E6561	362A- 29	2									
E6565	362A	2									
E6565-11	362A- 11	1									
E799		1									
F-200-11	7 - 12	1									
F-21065	250	5		P1					R	2915-294-2540	Y120
	288										
F-21065-2	250	5									
	288										
F-21065-2X	250	1							R	2915-554-4549	Y120
	288										
F-5/8-NM	184 - 18	2							P	5310-390-7945	G190
	185 - 18										
F-70785	120	1									
	229 - 10										
	256 - 43										
F-70920	220 - 14	1		X1					R	2915-594-1749	Y120
F-8300-24	99 - 98	1							R	2915-528-6218	Y120
	250 - 8										
F-8300-25		1									
F-8300-34		1									
F-8300-36	250	1									
FA-50002-8A		1									
FA2035	249	1									
	250										
F8-048	16 -115	2									
FC3333		1									
FC3398		1									
FC3500-30		1							R	1680-607-8440	X110
FC3532	355 -194	1		P1					R	1560-323-4371	X110
	355 -219										
	PG. 1016										
	PG. 1024										
FC3537		1							R	1680-508-6878	X110
FC3582	PG. 1018	1									
FC3628	PG. 1018	1		P1	F	O	C		R	1680-53A-8786	X110
	PG. 1024										
FL3C3		1									
FL3C6	204 - 15	1							R	3110-143-2997	G730
FNA-324	92	1									
FNA324		1		P1					R	9905-205-1606	V170
FR-5-A1-110	352 - 20	1							P	1660-541-4112	YECP
FR4-5	128 - 86	2									
FR4-5L		2							R	3110-277-0433	G730
FR5-A1-110		1							P	1660-541-4112	YECP
F5-71		1							P	5930-669-8741	D334
F5-77	255 - 3	1							P	5930-548-4725	D334
	315										
	318										
FT-983	99 - 63	1		P1	F	O	S		P	1680-505-8506	X110
	100 - 80										
	100 -144										
	101 - 76										
	102 - 52										
	103 - 34										
FT-986	99 - 41	1							R	1680-505-8507	X110
FT983		1							P	1680-505-8506	X110
F10DAC-X		15									
F10DAC4		15									
F10DAY		10									
F10DA316		19									
F10DA4		10									
F10FA-X		1									
F10FAD		2							R	5340-535-9569	G190
F10FA316		7									
F10FA4		1									
F10FA416		2							R	5340-535-9570	G190
F148-1	215	1							P	6105-500-4188	D444
F148-2		1		P1	F	O	R		P	6125-500-1794	D334
F164-5	10 - 87	10									

PART NUMBER	FIGURE AND INDEX	TOTAL QTY.	MICRO-FILM NUMBER	MAINTENANCE CODE DATA: SOURCE CODE	INST'L CAPABILITY	PRE-INST'L CAPABILITY	RECOVERABILITY	SUPPORT EQUIPMENT	FEDERAL STOCK NUMBER DATA: COGNIZANCE CODE	FEDERAL STOCK NUMBER	MFG. CODE (TSMC)
F1934-1032-2	10	56							R	5310-550-4611	G190
	122										
	212										
F1934-1032-3		5									
F1934-1032-4	10	80							R	5310-543-2598	G190
F1934-1032-6	9	6									
	10										
F200-10		2							R	5320-292-9051	G191
F200-11		1							R	5320-515-9188	G191
F200-3	87 - 23	172							R	5300-C01-3972	G191
F200-5		8							R	5320-205-7792	G191
F2000-10-1032	9	9							R	5310-208-2409	G190
	10										
F2000-10-428	10	12							R	5310-514-8188	G190
	21										
F2000-10-632		1							P	5310-550-0713	G190
F2000-1032	10	2									
F2000-428	21	4									
F2005		1							R	5320-205-7792	G191
F21065	249	1									
F21065-2	249	1									
F21065-2X	247	1							R	2915-554-4549	Y120
	249										
F21065-207		1							R	2915	
F260-12	6 - 27	4		M		O					
F260-5	87 - 26	8							R	5320-205-7867	G191
F2617		1									
F29242-1		1									
F34-14	25 - 13	8							R	3120-517-8837	G750
	45 - 41										
	67 - 24										
	75 - 49										
	83 - 14										
	83 - 48										
F347-14		1									
F416DA-X		2									
F416DA4		2									
FA16FA-X		1									
FA16FA316		2									
F416FA4		1									
F416FA816		3		P1			C		R	5340-608-1591	G192
F44-14	69 - 11	2							R	3120-433-4774	G750
F5000-10-1032	3	44									
	5										
	9										
	10										
	21										
	357										
F5000-10-428	10	36							R	5310-531-0573	G190
F5000-1032	21	2									
F5000-428	345A- 30	4									
F5000-832	76	6		M		O					
F70785		1							R	2915-589-1369	Y120
F8-DA-316		1									
F8-DA-4		3									
F8-FA-4		1									
F8-FA-416		2									
F8-FA-416		1									
F8DA-X		3									
F8FAD		4									
F8FA2016		2									
F8300-24	100 -201	1									
	249 - 15										
F8300-25	247	1							R	2915-608-6057	Y120
F8300-36		1		P1	F	O	S		R	2915-605-3017	Y120
F9242-1	63 - 1	1							R	2995-340-3431	X110
G-56778	179 - 1	1							R	1680-640-7690	D334
	226 - 8										
	251 - 9										
	254 - 6										
	263 - 4										
	270 - 3										
G-56778-A	222 - 11	1							R	1680-529-7935	D334
	226 - 8										
	254 - 6										
	263 - 4										
	270 - 3										
	283 - 4										
G-56778A	179 - 1	1									
	251 - 9										
G-57361-C	247 - 6	1									
G-57361-G	247 - 10	1									
G-57361-P	247	1									
G-58778	222 - 11	1									
G-6080	207 - 15	1							R	6110-522-3544	DGMC
	208 - 15										
	224 - 19										
	233 - 9										
	241 - 5										
G-7005-2-24	44 - 98	1		P1							
	44 -108										
	241 - 14										
G-7454	228 - 28	1									
G-7454A	228	1									
G-7455A-1	264 - 83	1									
	284 - 1										
	286 - 12										
	295 - 51										
G-8890		2									
G-8890-1	227 - 37	1		A		F					
	265										
	295 - 50										
G-8890-1A	227 - 37	1									
	295 - 50										
G-9515-1	227	1									

PART NUMBER	FIGURE AND INDEX	TOTAL QTY.	MICRO-FILM NUMBER	MAINTENANCE CODE DATA: SOURCE CODE	INSTL CAPABILITY	PRE-INSTL CAPABILITY	RECOVERABILITY	SUPPORT EQUIPMENT	FEDERAL STOCK NUMBER DATA: COGNIZANCE CODE	FEDERAL STOCK NUMBER	MFG. CODE (TSMC)
	265										
	268 - 3										
	295										
G-9515-1A	227	1									
	268 - 3										
	295										
GB-47	316 - 30	4									
GC-A1		1									
GG22B-1	265 - 10	1		P1					R	1280-300-8754	B210
GG22B1	264 - 45	1									
GH3-1/2	PG. 1005	2									
GH5	44 - 57	70							R	5325-432-9960	GH80
	71										
	315										
	318										
	334										
	343 - 29										
	345										
	347 - 24										
GH5-6		5									
GH5X-.622	348	82									
	347										
GH5X-.662	334										
	335										
	344										
	349										
GH5X66L		39									
GH51-8		1									
GK-32SM		1									
GT-2111		1							R	5945-578-2478	D334
GYZP204		1									
G1000-1032-10	33	1									
G1000-428-10-3	18	1									
	357										
G1000-428-10-4	18	2									
	357										
G342001		21									
G342001-SA1		13									
G342001-SA2		13									
G342006		18									
G342006-SA1		1									
G342006-SA2		1									
G51H-8	97 - 53	2									
	269 - 37										
	269A- 31	1									
G51H-C	227 - 28	1							R	5325-589-8459	GB90
G57361-C		1		P1					R	5945-324-7514	D334
G57361-D		1							R	5945-694-1490	D334
G57361-G		1		P1	F	O	C		R	5945-506-1891	D334
G7454A	264 - 1	1									
		1		P1	F	O	R		R	1095-624-3148	B210
G7455		1		P1					R	5975-548-5079	D334
G7455A-1	284 - 62	1									
	295 - 51										
G8060A	284	1									
G8225-2		1							R	6220-604-8572	DGMC
G8890-1		1							R	1290-390-4273	B210
	295 - 50	1									
G8890-1A	295	1									
G9440B-1		1							R	6220-542-6829	DGMC
G9515-1		1		P1	F	O	R		R	1290-607-8089	B210
	295	1		P1	F	O	R		R	1290-607-8089	B210
G9515-1A	265	1									
	295										
H-4602	340 - 28	1									
H-4603	340 - 29	1									
H-4604-2	340 - 26	1									
H-4604-3	340 - 27	1									
H-4731	340 - 25	1									
H-5000-.072-.142	347 - 33										
	347 - 36										
	347 - 39										
	347 - 42										
H-5000-.072-.156	343 - 18	7									
	343 - 22										
H-5000-.072-.179	343 - 19	3									
H-5000-040-081	71	1									
H-5000-063-188	334 -127	4									
	334 -132										
H-5000-064-096	39 - 78	1									
H-5000-064-115	39 - 77	3							R	5340-514-3073	GH80
H-5000-064-125	39 - 65	2							R	5340-205-6914	GH80
	333										
	334 - 80										
	347 - 25										
	348 - 37										
H-5000-064-142	334 - 42	2									
H-5000-064-154		8									
H-5000-064-156		8									
	347 - 9	16									
	348 - 11										
H-5000-064-158	348 - 17	8									
H-5000-064-188	334 - 97	1									
H-5000-069-125	333	2									
H-5000-072-132	344 - 19	7									
	345 - 19										
	346 - 20										
H-5000-081-081	47 - 37	2									
H-5000-081-164	349 - 38	3									
	349 - 40	3									
H-5000-156-156	44 -139	2							R	5340-514-3075	GH80
H-5000-91-102	340 - 24	1									
H-6095D-4.0-064-188A	333	1									
H-6095D-5.0-064-188A	333	1									
H-6300S-1.875-072-07		2									

PART NUMBER	FIGURE AND INDEX	TOTAL QTY.	MICRO-FILM NUMBER	MAINTENANCE CODE DATA: SOURCE CODE	INSTL CAPABILITY	PRE-INSTL CAPABILITY	RECOVERABILITY	SUPPORT EQUIPMENT	FEDERAL STOCK NUMBER DATA: COGNIZANCE CODE	FEDERAL STOCK NUMBER	MFG. CODE (TSMC)
H-6300S-2.5-072-072	344 - 17	4									
	345 - 17										
	346 - 18										
H-6300S-3-.072-.072	343 - 23	2									
H-6300S-4-072-072	344 - 26	5									
	345 - 26										
	348 - 25										
H-8700-74-7	343 - 10	6									
	347 - 26										
H-8708	343 - 11	4									
H-8708-1	343 - 11	4									
	347 - 27										
H-9176		4									
H-9176S		4									
	347 - 4	4									
	348 - 5										
H-9176S	348 - 4	4									
H-9176S		4									
H-9190	32	4							R	5340-566-5272	GH80
H-9190-S		4							R	5340-566-5272	GH80
H-9190S	44 - 68	4									
HA5B-3	206 - 6	1									
HE-450F1J		3									
HE-450FN	172 - 64	1									
	172 - 81	2									
HEC-G10	284A- 22	3									
HEL-4CREN		1							R	3120-586-0335	G750
HEL-4FN	176 - 87	1									
HEL-450FN		3									
HF-3	45 - 64	6							R	3120-661-9969	G750
	259 -146										
	259 -179										
	316 - 61										
HF-3G	19 - 82	6									
HK309	PG. 1011	1									
HM-3	19 - 80	14							R	3120-661-9968	G750
	45 - 86										
	67 - 32										
	259 -144										
	259 -177										
	316 - 62										
HM-3B	19	2							R	3120-661-7580	G750
HM-3D	19	2							R	3120-661-7578	G750
HM-4		6							R	3120-433-4782	G750
HML-4		1									
HML4		6							R	3120-337-0440	G750
HMX-4FG	45 -122	8							R	3120-662-9323	G750
	45 -142										
HMX-4G	64 - 11	19							R	3120-662-9293	G750
	64 - 29										
	67 - 23										
HP209	155 - 17	1									
HRA7	26 - 63	4									
HRBH-4-EFN	205 - 99	1									
HRBH-4ES		1									
HRBH4ES		1									
HRBL-L3E	259 - 30	1							R	3120-516-0567	G750
HRBL-3E	34 - 45	2							R	3120-497-4810	G750
	259 - 32										
HRBM-3EN		1									
HRBM-4E	68 - 8	2		M		D			R	3120-517-8831	G750
HSB-4	67 - 35	1									
HSBG-10	45 - 70	4							R	3120-661-7056	G750
	45 -151										
	395 -156										
	PG. 1015										
	PG. 1023										
HSBG-10SA	84 - 2	3							R	3120-662-9299	G750
	145 - 7										
	145 - 12										
	149 - 18										
	149 - 37										
	157 - 5										
	157 - 10										
HSBG-12SA	131 - 7	2							R	3120-293-6021	G750
	131 - 29										
HSBG-14SA	89 - 63	2		M		D			R	3120-516-0511	G750
	128 - 2										
HSBG-16S	2	2							R	3120-278-7688	G750
HSBG-16SA		2							R	3120-528-5522	G750
HSBG-20SA		4							R	3120-661-9958	G750
HSBG-3	21 - 39	6							R	3120-516-0560	G750
	21 - 43										
	21 - 47										
	190										
HSBG-4	30 - 6	8									
	67 - 8										
	68 - 3										
	183 -186										
HSBG-4A	75 - 40	2							R	3120-516-0496	G750
HSBG-4S	172 - 13	1									
	172 -121	1									
	176 - 95										
	176 -108										
	176 -116										
	176 -134										
HSBG-4SA	147	6		X1					R	3120-662-9312	G750
	160 - 6										
	160 - 22										
HSBG-5A	75 - 54	2							R	3120-516-0615	G750
HSBG-5S	183 -199	2							R	3120-278-7687	G750
HSBG-5SA	141 - 69	2							R	3120-278-7684	G750
HSBG-5S	182 -188	1									
HSBG-6	30 - 36	2							R	3120-516-0514	G750
	47 - 47										

PART NUMBER	FIGURE AND INDEX	TOTAL QTY.	MICRO-FILM NUMBER	MAINTENANCE CODE DATA: SOURCE CODE	INSTL CAPABILITY	PRE-INSTL CAPABILITY	RECOVERABILITY	SUPPORT EQUIPMENT	FEDERAL STOCK NUMBER DATA: COGNIZANCE CODE	FEDERAL STOCK NUMBER	MFG. CODE (TSMC)
HSBG-65		1							R	3120-278-7686	G750
HSBG-65A	183 -124	2							R	3120-916-0512	G750
HSBG-75A	138 - 64	2							R	3120-517-8709	G750
	143 - 22										
HSBG-75A	138 - 22	1									
HSBG-85A	89 - 10	1							R	3120-293-6019	G750
HSBG-9		4							R	3120-287-8602	G750
HSBG-95A	13 - 94	9							R	3120-862-9317	G750
	78 - 48										
	156 - 13										
	166 - 8										
	166 - 27										
HSBG-95A	167 - 25	1									
HS10-6-7-14	119 - 6	1									
HS10-8-3-9	347 - 15	4									
	348 - 20										
HS15-6	352	3							R	5306-038-3212	G1AN
HS15-8	14	71							R	5320-038-3213	G192
	18										
	357										
HS2018-6-7-22	119 - 5	1									
HS47-6-3		AR							R	5320-217-7548	G191
HS47-6-5		AR							P	5320-217-7540	G191
HS47-6-6		AR							R	5320-217-7541	G191
HS47-6-7		AR							R	5320-217-7542	G191
HS47-6-8		AR							R	5320-217-7543	G191
HS47-6-9		AR							R	5320-217-7544	G191
HS47-8-10		AR							R	5320-290-6738	G191
HS48-6-3		16							R	5320-391-7760	G191
HS48-6-4		14							R	5320-391-7761	G191
HS51P-8-5	14 -254	2							R	5320	
	14 -255										
HS51P-8-6	14 -253	1							R	5320-205-8552	G190
	14 -256										
HS52P-8-5	14 -247	13							R	5320-205-8686	G191
HS52P-8-6	14 -248	30							R	5320	
HS52P-8-7	14 -251	2							R	5320-205-8687	G191
	14 -252										
HS52P-8-8	14 -250	5							R	5320-205-7900	G190
	18 - 5										
HS52P8-8	357	3							R	5320-205-7900	G190
HS6M24		6									
HS63-101015-51		6									
HS7M-20		6									
HS98480	116 - 29	4							R	5310-596-5569	G190
HS98482	334 -160	8									
HTB3M		1							R	5120-315-3996	S231
HTB4M	PG. 1010	1							R	5120-315-3997	S231
HTB5M	PG. 1010	1							R	5120-315-3998	S231
HTB6M	PG. 1010	1							R	5120-315-3999	S231
HTB7M	PG. 1010	1							R	5130-315-4000	S231
HTB8M	PG. 1010	1							R	5130-315-4001	S231
HT3M-5	18 - 63	2									
HT3M-6		2									
HT3203M		1							R	5120-315-4003	S231
HT3304M	PG. 1010	1		P1			S		R	5120-315-4004	S231
HT3305M	PG. 1010	1		P1			S		R	5120-315-4005	S231
HT3306M	PG. 1010	1		P1			S		R	5120-315-4006	S231
HT3307M	PG. 1010	1		P1			S				
HT3308M	PG. 1010	1		P1			S				
HT3407M		1							R	5120-315-4007	S231
HT3408M		1							R	5120-315-4008	S231
HT4M-12		4									
HT4M-10	14 - 52	108							R	5306-638-9677	G190
	14 - 95										
	14 -118										
	14 -128										
	14 -132										
	14 -140										
	14 -179										
	14 -232										
	15 - 92										
	15 - 94										
HT4M-11	14 - 38	114							R	5306-638-9733	G190
	14 -114										
	14 -122										
	14 -124										
	14 -178										
	14 -182										
	14 -231										
	15 -107										
	15 -164										
	15 -170										
HT4M-12	12 - 73	80							R	5306-638-9737	G190
	14 - 9										
	14 -120										
	14 -123										
	14 -177										
	14 -183										
	15 -163										
	15 -171										
	15 -231										
	15 -233										
HT4M-12A		2									
HT4M-13	14 -106	30							R	5306-638-9706	G190
	14 -176										
	14 -184										
	15 -162										
	15 -172										
	18 - 41										
	195										
	247										
HT4M-14	14 -175	5							R	5306-638-9745	G190
	14 -183										
	15 -161										

PART NUMBER	FIGURE AND INDEX	TOTAL QTY.	MICRO-FILM NUMBER	MAINTENANCE CODE DATA: SOURCE CODE	INSTL CAPABILITY	PRE-INSTL CAPABILITY	RECOVERABILITY	SUPPORT EQUIPMENT	FEDERAL STOCK NUMBER DATA: COGNIZANCE CODE	FEDERAL STOCK NUMBER	MFG. CODE (TSMC)
HT4M-15	15 -173										
	14 - 29	32							R	5306-638-9722	G190
	14 - 49										
	14 - 55										
	14 -174										
	14 -186										
	15 -160										
	15 -174										
	15 -175										
HT4M-16	14 -173	6							R	5306-638-9734	G190
	14 -187										
	15 -159										
	100 -104										
	100 -105										
	100 -116										
	100 -117										
HT4M-17	14 -172	4							R	5306-638-9753	G190
	14 -188										
	15 - 83										
	15 -158										
	15 -176										
HT4M-18	14 -171	4							R	5306-638-9754	G190
	14 -189										
	15 - 67										
	15 -230										
HT4M-19	14 -170	8							R	5306-638-9684	G190
	15 -157										
	22 - 24										
	22 - 41										
HT4M-20	14 -119	3							R	5306-638-9721	G190
	14 -169										
	15 -156										
HT4M-21	14 -188	7							R	5306-638-9697	G190
	15 - 44										
	15 -155										
	22 - 23										
	22 - 40										
HT4M-22	15 - 13	7									
	15 -154										
HT4M-23	15 -153	1									
HT4M-24	15 -152	1									
HT4M-3	180 -178	1									
HT4M-4	14 -104	74							R	5306-638-9744	G190
	14 -107										
	14 -110										
	14 -243										
	14 -244										
	14 -261										
	18 - 1										
HT4M-43	180 -161	2									
	180 -167										
HT4M-5	14 - 33	34							R	5306-638-9743	G190
	14 - 62										
	14 - 65										
	14 -103										
	14 -108										
	14 -109										
	15 - 80										
	15 - 87										
	15 - 90										
	118										
HT4M-6	14 - 99	218							R	5306-638-9738	G190
	14 -102										
	14 -115										
	14 -245										
	14 -260										
	14 -270										
	15 - 75										
	15 -227										
	15 -238										
HT4M-7	14 - 47	166							R	5306-638-9740	G190
	14 - 89										
	14 - 91										
	14 -116										
	14 -125										
	14 -135										
	14 -137										
	14 -239										
	14 -246										
	14 -268										
HT4M-8	10 - 74	500							R	5306-638-9682	G190
	14 - 3										
	14 - 5										
	14 - 16										
	14 - 18										
	14 - 21										
	14 - 22										
	14 - 34										
	14 - 35										
	14 - 44										
HT4M-8A	6 - 29	4									
HT4M-9	14 - 24	156							R	5306-638-9735	G190
	14 - 25										
	14 - 36										
	14 - 37										
	14 - 54										
	14 - 63										
	14 - 96										
	14 - 98										
	14 -100										
	14 -127										
HT4M-9A	6 - 48	2									
HT47M11	14 - 93	9									
HT5M-10	14 -113	28							R	5306-638-9673	G190
	14 -129										

PART NUMBER	FIGURE AND INDEX	TOTAL QTY.	MICRO-FILM NUMBER	MAINTENANCE CODE DATA: SOURCE CODE	INSTL CAPABILITY	PRE-INSTL CAPABILITY	RECOVERABILITY	SUPPORT EQUIPMENT	FEDERAL STOCK NUMBER DATA: COGNIZANCE CODE	FEDERAL STOCK NUMBER	MFG. CODE (TSMC)
	14 -141										
	14 -181										
	14 -272										
	15 - 35										
	15 -103										
	15 -169										
	15 -197										
	15 -217										
HT5M-11	14 - 59	60							R	5306-638-9708	G190
	14 -130										
	14 -273										
	15 -167										
	15 -198										
	15 -237										
	18 - 83										
	180 -142										
	180 -146										
HT5M-11A	18 - 71	2									
HT5M-12	14 - 10	64							R	5306-638-9748	G190
	14 - 43										
	14 -265										
	15 - 20										
	15 - 51										
	15 -199										
	15 -210										
	15 -229										
	15 -276										
	16 - 56										
HT5M-13	14 - 84	34							R	5306-638-9724	G190
	14 -142										
	14 -266										
	15 -104										
	15 -124										
	15 -125										
	15 -200										
HT5M-14	15 -123	2									
HT5M-15	14 - 51	46							R	5306-638-9752	G190
	14 - 48										
	14 - 57										
	15 -102										
	15 -277										
HT5M-16	12 - 86	16							R	5306-638-9699	G190
	14 - 56										
	14 - 94										
HT5M-17	14 -144	10							R	5306-638-9723	G190
	18 - 18										
	15 - 49										
	15 - 85										
	15 -177										
	15 -275										
HT5M-18	15 - 66	4							R	5306-638-9676	G190
HT5M-19	14 -190	9							R	5306-638-9751	G190
	15 -178										
	16 -206										
	22 - 22										
HT5M-20	15 - 84	3							R	5306-638-9716	G190
HT5M-21	15 - 45	9							R	5306-648-9691	G190
	22 - 20										
	22 - 21										
	22 - 39										
HT5M-22	14 -167	10							R	5306-638-9710	G190
	15 - 14										
HT5M-23	14 -166	3							R	5306-638-9709	G190
	22 - 19										
	22 - 38										
HT5M-25	14 -209	9							R	5306-638-9712	G190
	15 -151										
HT5M-26	14 -211	10							R	5306-638-9747	G190
	15 -150										
HT5M-27A	12 - 90	2									
HT5M-28A	16 -216	6									
	16 -220										
HT5M-32	16 -135	2									
HT5M-35	117 - 26	1									
HT5M-41	16 - 9	2									
HT5M-5	117 - 27	6									
	117 - 28										
	117 - 30										
HT5M-6	117 - 29	6									
HT5M-7	14 - 46	50							R	5306-638-9780	G190
	14 - 86										
	14 - 88										
	14 - 90										
	14 -136										
	15 - 57										
	15 - 98										
	15 -114										
	15 -225										
	15 -226										
HT5M-8	14 - 50	250							R	5306-638-9679	G190
	14 - 60										
	14 - 72										
	14 - 73										
	14 - 83										
	14 - 85										
	14 - 87										
	14 -143										
	14 -235										
	15 - 21										
	18 - 45										
HT5M-9	14 - 92	130							R	5306-638-9785	G190
	14 -131										
	14 -180										
	14 -234										
	14 -242										

PART NUMBER	FIGURE AND INDEX	TOTAL QTY.	MICRO-FILM NUMBER	MAINTENANCE CODE DATA: SOURCE CODE	INSTL CAPABILITY	PRE-INSTL CAPABILITY	RECOVERABILITY	SUPPORT EQUIPMENT	FEDERAL STOCK NUMBER DATA: COGNIZANCE CODE	FEDERAL STOCK NUMBER	MFG. CODE (TSMC)
	14 -249										
	14 -271										
	15 -101										
	15 -105										
	15 -166										
	15 -168										
HT6M-11	14 -229	3							R	5306-638-9742	G190
HT6M-12	14 - 8	5							R	5306-638-9681	G190
	14 - 12										
	14 -264										
	15 -212										
	15 -240										
HT6M-13	15 -188	3							R	5306-638-9741	G190
HT6M-14	14 -202	4							R	5306-638-9726	G190
HT6M-15	14 - 7	16							R	5306-638-9727	G190
	14 - 13										
	14 - 14										
	14 - 30										
	14 -191										
	15 -186										
	15 -222										
	16 -152										
HT6M-15A	14 - 4	16									
HT6M-16	14 -192	8							R	5306-638-9685	G190
	14 -203										
	15 -220										
	16 -155										
HT6M-17	15 -185	10							R	5306-638-9707	G190
	22 - 8										
HT6M-18	14 -193	8							R	5306-638-9683	G190
HT6M-19	14 -194	8							R	5306-638-9702	G190
	14 -204										
	15 - 23										
	15 - 54										
	15 -184										
	22 - 18										
	22 - 36										
	25 - 66										
HT6M-19A	15 - 10	8									
	15 - 41										
HT6M-20	14 -150	6							R	5306-638-9698	G190
	15 -189										
	16 -183										
	316 - 82										
HT6M-21	14 -195	12							R	5306-638-9693	G190
	14 -205										
	15 - 43										
	15 -183										
	16 -187										
	22 - 17										
	22 - 35										
	316 - 84										
HT6M-22	14 -196	8									
	14 -206										
	15 - 12										
	15 -132										
	15 -190										
	16 -180										
	316 - 83										
HT6M-23	15 -182	4							R	5306-638-9692	G190
	16 -190										
	22 - 16										
	22 - 34										
	316 - 85										
HT6M-24	14 -197	3									
	14 -207										
	22 - 5										
HT6M-25	14 -198	12							R	5306-638-9720	G190
	15 -181										
	22 - 7										
	22 - 15										
	22 - 33										
HT6M-26	14 -210	16							R	5306-638-9719	G190
	22 - 4										
HT6M-27	15 -180	8							R	5306-638-9688	G190
	15 -191										
	22 - 6										
	22 - 14										
	22 - 32										
HT6M-28	15 -192	1									
HT6M-29	15 -179	1									
HT6M-30	15 -193	3									
HT6M-33	16 - 97	1									
HT6M-6	14 - 77	10							R	5306-638-9689	G190
	14 -240										
HT6M-7	14 -112	12							R	5306-638-9678	G190
	15 - 60										
	15 - 99										
	15 -225										
HT6M-8	14 - 2	10							R	5306-639-9718	G190
	14 - 15										
	14 - 17										
	14 - 20										
	14 - 33										
	14 - 40										
	15 - 3										
	15 - 25										
	15 - 36										
HT6M-8A	6	22									
	7 - 48										
HT6M-9	14 - 69	6							R	5306-638-9736	G190
	14 -263										
	14 -277										
	15 - 32										
HT6M15	14 - 28	1									

PART NUMBER	FIGURE AND INDEX	TOTAL QTY.	MICRO-FILM NUMBER	MAINTENANCE CODE DATA: SOURCE CODE	INST'L CAPABILITY	PRE-INST'L CAPABILITY	RECOVERABILITY	SUPPORT EQUIPMENT	FEDERAL STOCK NUMBER DATA: COGNIZANCE CODE	FEDERAL STOCK NUMBER	MFG. CODE (TSMC)
HT7M-10	14 -146	4							R	5306-638-9725	G190
	15 -128										
HT7M-11	14 -147	8							R	5306-638-9687	G190
	15 -129										
HT7M-12	14 -148	4							R	5306-638-9686	G190
	15 -130										
HT7M-13	14 -149	10							R	5306-638-9704	G190
	15 -131										
HT7M-14	14 -275	170							R	5306-639-5233	G190
	15 -203										
	15 -204										
	15 -208										
	24 - 13										
	24 - 14										
	24 - 19										
	24 - 20										
	24 - 22										
	24 - 25										
HT7M-15	14 -151	30							R	5306-638-9705	G190
	15 -133										
	15 -205										
	15 -209										
	24 - 97										
	24 - 98										
	24 - 99										
	24 -100										
	24 -104										
	24 -105										
	24 -106										
HT7M-16	14 -152	10							R	5306-639-5226	G190
	14 -236										
	15 -134										
	16 -146										
	24 - 47										
	24 - 78										
HT7M-17	14 -153	4							R	5306-638-9713	G190
	15 -135										
HT7M-18	14 -154	42							R	5306-639-5229	G190
	14 -276										
	15 -136										
	15 -206										
	22 - 9										
	22 - 10										
	22 - 11										
	22 - 27										
HT7M-19	14 -155	26							R	5306-639-5286	G190
	15 -137										
	24 - 34										
	24 - 40										
	24 - 65										
	24 - 72										
	24 - 96										
	24 -110										
HT7M-20	14 -156	10							R	5306-639-5227	G190
	15 -138										
	24 - 11										
	24 - 18										
	24 - 29										
	24 - 42										
	24 - 49										
	24 - 60										
	24 - 73										
	24 - 80										
	24 - 91										
HT7M-21	14 -157	14							R	5306-639-5222	G190
	15 -139										
	24 - 12										
	24 - 17										
	24 - 43										
	24 - 48										
	24 - 61										
	24 - 74										
	24 - 79										
	24 - 92										
HT7M-22	14 -158	5							R	5306-639-5225	G190
	22 - 37										
	24 - 26										
	24 - 57										
	24 - 88										
HT7M-23	14 -159	31							R	5306-639-5228	G190
	14 -274										
	15 -141										
	22 - 13										
	22 - 29										
	24 - 21										
	24 - 27										
	24 - 30										
	24 - 46										
	24 - 58										
	24 - 89										
HT7M-24	14 -160	12							R	5306-638-9715	G190
	15 -140										
	15 -142										
	15 -201										
	15 -202										
	22 - 25										
	22 - 30										
	24 - 15										
	24 - 53										
	24 - 83										
HT7M-25	14 -161	12							R	5306-638-9714	G190
	15 -143										
	22 - 26										
	22 - 31										
HT7M-26	14 -162	8							R	5306-638-9732	G190

PART NUMBER	FIGURE AND INDEX	TOTAL QTY.	MICRO-FILM NUMBER	MAINTENANCE CODE DATA: SOURCE CODE	INST'L CAPABILITY	PRE-INST'L CAPABILITY	RECOVERABILITY	SUPPORT EQUIPMENT	FEDERAL STOCK NUMBER DATA: COGNIZANCE CODE	FEDERAL STOCK NUMBER	MFG. CODE (TSMC)
	14 -163										
	14 -199										
	15 -144										
HT7M-27	15 -145	1									
HT7M-28	15 -278	4									
HT7M-29	15 -147	8							R	5306-638-9729	G190
	15 -280										
HT7M-30	15 -281	2							R	5306-637-9731	G190
HT7M-31	15 -282	26							R	5306-639-5271	G190
	24 - 35										
	24 - 41										
	24 - 64										
	24 - 71										
	24 - 77										
	24 - 95										
	24 -109										
HT7M-32	16 -106	2									
HT7M-33	15 -283	8							R	5306-638-9730	G190
HT7M-35	15 -284	12							R	5306-638-9728	G190
	22 - 12										
	22 - 28										
HT7M-41		6							R	5306-639-5221	G190
HT7M-43	24 - 16	6							R	5306-439-4586	G190
	24 - 52										
	24 - 84										
HT7M-8		4									
HT7M-8A	6 - 46	8									
	7 - 13										
	7 - 15										
HT7M-89	15 - 70	4									
HT7M-9	14 -145	9							R	5306-638-9694	G190
	14 -238										
	15 -126										
	16 - 40										
	16 - 43										
HT8M-11	14 - 78	4							R	5306-638-9674	G190
	15 - 58										
	15 -119										
HT8M-12		8							R	5306-638-9739	G190
HT8M-14		8							R	5306-638-9675	G190
HT8M-15	15 -214	2									
	16 -167										
HT8M-16	14 -237	2									
	16 -149										
HT8M-17	14 -230	2							R	5306-638-9703	G190
	16 -164										
HT8M-33	16 - 16	5									
	16 - 96										
HT8M-39	16 -119	2									
HT8M-6	15 - 61	3									
	15 -120										
HT8M-7	14 - 75	4							R	5306-638-9711	G190
HT8M16		4							R	5306-607-1739	G192
H165A5R-SL8	366 - 16	5									
H161-16	PG. 1010	1		P			C				
H5H-5000-.072-.142	343 - 15	2									
H5000-.072-.156	345A- 18	7									
	345A- 22										
H5000-.072-.179	345A- 19	3									
H5000-.081-.164	335 - 66	4									
H5000-.72-.142	345A- 15	2									
H5000-040-081		2		H		O			R	5340-598-2851	GH80
H5000-040-125	39 - 95	3									
H5000-063-.125		1									
H5000-063-.188		1									
H5000-063-.250		1									
H5000-064-.125		1							R	5340-205-6914	GH80
H5000-064-096		2							R	5340-205-6909	GH80
H5000-064-115		6							R	5300-C01-2659	GH80
H5000-064-128		1		P1							
H5000-064-142		2							R	5340-598-2847	GH80
H5000-064-179		2							R	5340-201-1797	GH80
H5000-064-188		1							R	5340-530-8004	GH80
H5000-064-312		1							R	5340-205-6886	GH80
H5000-069-125		2									
H5000-081-081		2									
H5000-081-164		3							R	5340-033-4610	GH80
H5000-102-125		2									
H5000-156-156		2							R	5300-C01-2662	GH80
H5000-2-064-115		1							R	5340-514-3073	GH80
H5000-75-MD		2									
H6086-KZ83		1									
H6086-KZ84		1									
H6095-4.0-064-1		2									
H6095-4.0-064-188A		1									
H6095-5.0-064-1		1									
H6095D-4.0-064-118A		1									
H6095D-5.0-064-189A		1									
H63-101015-51	44 - 93	6									
H63005-1.875-072-072	344 - 20	6							R	5340-620-3169	GH80
	345 - 20										
	346 - 21										
H63005-3-.072-.072	345A- 23	2									
H63005-4.5-.072-.135	343 - 16	3									
	345A- 18										
H63005-6.0-.072-.156	343 - 20	4									
	345A- 20										
H630051.875-.072.072	347 - 37										
H630053-.072-.072	347 - 43	2									
H630054.5-.072-.135	347 - 34	1									
H630056.0-.072-.072	347 - 40	2									
H63101015-51		2							R	5305-550-4244	G192
H65510325		1							R	5310-207-9445	G190
H8700-7A-7	345A- 10	2									
H8708	345A- 11	4									

PART NUMBER	FIGURE AND INDEX	TOTAL QTY.	MICRO-FILM NUMBER	MAINTENANCE CODE DATA: SOURCE CODE	INST'L CAPABILITY	PRE-INST'L CAPABILITY	RECOVERABILITY	SUPPORT EQUIPMENT	FEDERAL STOCK NUMBER DATA: COGNIZANCE CODE	FEDERAL STOCK NUMBER	MFG. CODE (TSMC)
H8708-1	345A- 11	4									
H90800-3		1									
H9190S		1							R	5340-566-5272	GH80
IAT3		1									
ID-250A/ARN		1							R	5826-517-1335	FANN
ID-251/ARN		1							R	5800-C03-2367	FANN
ID-307/ARN		1							R	5800-C03-2371	FANN
ID-351A		1							R	5800-C03-2379	FANN
ID-387/ARN		1									
ID210/ARN-21		1									
ID249B/ARN	210 - 35	4							R	5826-517-1336	FANN
	211 - 9										
	276 - 5										
	315 - 54										
	318 - 53										
ID251/ARN-14	210 - 38	1									
	276 - 15										
ID307/ARN-21	211 - 11	1									
	276										
ID310/ARN-21	211 - 7	1							R	5800-C03-2372	FANN
	315 - 56										
INDICATOR FUEL FLOW	318										
J-3690	271 - 37	1							R	6645-575-9356	D334
JG7044-E2		1		P1					R	6615-307-7002	B210
JG7044-E5		1									
JG7044D-5	266 - 6	1									
JG7044D-6	266 - 6	1									
JG7044D3	264 - 39	1									
JG7044D4		1									
JG7044E-6	266 - 15	1									
JG7044E-7	266 - 15	1									
JG7044E2	264 - 15	1									
JS-5		2							R	5930-201-4429	D334
JV-5		1							R	5930-376-5714	D334
JX55F	254 - 5	1		P1	F	0	C		R	2915-376-2121	F642
JY-20		2									
J41CM2531	39	1									
J65-W-16	355	1									
	PG. 1013										
J65-W-16A	355										
	PG. 1014										
J65-W-4B	355 - 1	1									
	PG. 1014										
KLS-4	205 - 96	1									
KLS-4SS		1							R	3120-439-4586	G750
KM610-32	41 - 65	2							R	5340-329-2917	GM80
KPAR16	194 - 32	1									
KPAR16-2	205 -114	1							R	3110-143-3005	G730
KSBG4S	271 - 20	1									
KS4A	138 - 41	2							R	3110-278-7148	G730
	175 - 13										
	175 - 23										
	175 - 54										
	175 - 73										
	176 - 19										
	176 - 30										
	180										
	182 - 29										
	183 - 30										
KU44-200-SH		1									
KU44-200-S4	PG. 1011	1									
KWB-4A		2									
KWB-4G	205 -116	2									
KWB-4G	205 -116	2									
KWB-6G	205 - 71	2									
KY-81/APA-89	122 - 3	1									
	212 - 3										
K03-19-205N		1		P1							
K03-21-30SN		1							R	5955-204-9224	D336
K06-19-1/2		1		P1	M	0	N		R	5935-502-1938	D334
K08-21-5/8		1									
K1031-1032	3	19									
K1100-1032	88	1									
K1131		40									
K1910-428	14	98							R	5310-511-6779	G190
	15										
	16										
	18										
K1910-524	14	106							R	5310-511-6780	G190
	15										
K2000-1032	10	2									
K2000-428	80	2									
K24A		2									
K3000-1032	9	40							R	5310-559-0489	G190
	10										
K3000-524	80	2									
K3000-82		1									
K3000-832	13	1									
K3100-1032	10	21									
K3290S-100SH	350 - 86	2									
K3290S-125		2									
K3290S-125SH	350 - 12	2									
K3290S-150		1									
K3290S-150SH	350 - 15	9									
	351										
K3290S-200SH	351	1									
K3290S-300SH	351	1									
K3290S-400SH	350 - 9	1									
K3290S-450SH	350 - 55	1									
K7000-06-6	284A	3									
K83501-1	104 - 5	2									
	105 - 6										
K83501-2		2									
LAUNCHER AERO 15A		6									
LA17491	213 - 66	2							R	5930-298-6237	GB90

PART NUMBER	FIGURE AND INDEX	TOTAL QTY.	MICRO-FILM NUMBER	MAINTENANCE CODE DATA: SOURCE CODE	INST'L CAPABILITY	PRE-INST'L CAPABILITY	RECOVERABILITY	SUPPORT EQUIPMENT	FEDERAL STOCK NUMBER DATA: COGNIZANCE CODE	FEDERAL STOCK NUMBER	MFG. CODE (TSMC)
LA17491P		2									
LDM462		1									
LEL-SE-16		1									
LM1330	93 - 9	1									
	94 - 3										
	95 - 7										
	97 - 2										
	195 -105										
LM13301	93 - 7	1		P1	F	0	S		R	2915-620-2876	Y120
	94 - 3										
	95 - 7										
	97 - 2										
LP509-8-9	286A- 14	2									
LR13301	93	1									
LS-3	45 - 49	1		M		0			R	3120-497-4759	G750
	67 - 27										
LS53	19	13							R	3120-433-4584	G750
	67 - 18										
LS54	12 - 33	3							R	3120-433-4585	G750
	69 - 15										
LS56	333 - 43	2							R	3120-433-4587	G750
	333 - 46										
	333 -108										
L221		1							R	5340-597-0903	GH80
L3000G		1									
L3000R		1							R	6220-295-2053	D336
M-101		1							R	5120-033-2155	S190
M-101A-11-40506070	280 - 3	1									
M-11123	83 - 25	2							R	3110-227-2416	G750
M-17	68 - 4	1									
M-21-8A-3.0		4							R	5340-200-3942	GH80
M-3	11 - 8	1							R	5935-513-2807	D336
									R	7510-272-3080	G332
										OR	
M-6	45 - 47	1							R	5340-597-0943	GH80
M-7	25 - 19	1							V	6660-641-613	
	30 - 79										
									V	5130-323-5093	
										OR	
M-8	30 - 55	1							R	7510-272-3083	G332
MA-2		1									
MC1603-1750	321 - 71	1		P1					R	1650-516-3588	Y120
MC1603-34.5	322 - 41	2							R	4820-202-5538	Y120
	326 - 17										
MC1621	94 - 33	1		P1	F	0	S		R	2915-590-0859	Y120
	94 - 34										
	97 - 28										
	97 - 28										
MC2644		1		P1					R	1650-516-3543	Y120
MC2644-1	217 - 3	1		P1					R	1650-541-0715	Y120
	321										
MC2644A		1									
MC2711	195 - 33	2							R	5930-090-4181	D334
	295 - 29										
MDF-10	287 - 11	5		P							
MDF-15	284 - 35	12		P					R	5920-284-9222	D336
	284 - 46										
	285 - 4										
	285 - 5										
	285 - 46										
	285 - 50										
	285 - 52										
	285 - 57										
	287 - 3										
	287 - 12										
MDF-2		2									
MDF-2-8/10		8		P							
MDF-20	284 - 34	3							R	5920-284-9221	D336
	284 - 44										
	285 - 44										
	285 - 49										
	285 - 51										
	285 - 58										
	287 - 5										
	287 - 13										
MDF-25	284 - 36	8									
	284 - 45										
	285 - 6										
	285 - 7										
	285 - 39										
	285 - 40										
	285 - 41										
	285 - 42										
	285 - 59										
	285A- 4										
	285A- 37										
	285A- 38										
	285A- 54										
	287 - 6										
	287 - 14										
	287A- 7										
MDF-3	269 - 25	3									
	269 - 40										
	269A	7									
	269A- 4	1									
	269A- 5	1									
	269A- 6	1									
	269A- 7	3									
	284 - 37										
	284 - 41										
	285 - 37										
	285 - 38										
	285 - 65										
MDF-35	284 - 39	1									
	284 - 43										

PART NUMBER	FIGURE AND INDEX	TOTAL QTY.	MICRO-FILM NUMBER	MAINTENANCE CODE DATA: SOURCE CODE	INSTL CAPABILITY	PRE-INSTL CAPABILITY	RECOVERABILITY	SUPPORT EQUIPMENT	FEDERAL STOCK NUMBER DATA: COGNIZANCE CODE	FEDERAL STOCK NUMBER	MFG. CODE (TSMC)
MDF-5	284 - 36	7		P					R	5920-280-4959	D336
	284 - 40										
	284 - 42										
	285 - 47										
	285 - 48										
	285 - 55										
	287 - 2										
	287 - 10										
MDF20		6		P					R	5920-280-5019	E50C
MDH2721	278 - 7	1							R	5930-090-4166	D334
MF1000-632		1									
MGE29-2	216	1		P1	F	0	R		R	6125-538-9974	D334
MG54B		1									
MG54C		1									
MG54D	215 - 1	1		P1	F	0	R		R	6125-538-9878	D334
	216 - 1										
MK-1 MOD-3	228 - 30	1									
MK-1 MOD-0		4									
MK-10		1									
MK-1000-428		4									
MK-11		1							R	2040-223-3688	G310
MK-12 MOD-3	328 - 1	4									
MK-2 MOD-0		1									
MK-22 MOD-1		1									
MK-25 MOD-0	213 - 6	1									
	213 - 21										
MK-25 MOD-1		1									
MK-3 MOD-1	228 - 29	1									
MK-3000-1032		14		M		0					
MK-3000-428		2									
MK-35 MOD-3	207 - 1	1									
	208 - 1										
	213 - 9										
MK-35 MOD-0		1									
MK-4 MOD-1	228	1									
MK-5 MOD-0	228	1									
MK-6 MOD-0	228	1							R	1055-212-8896	B210
MK-75 MOD-0	213 - 7	1									
MK-8 MOD-8	213 - 10	1									
MK-86 MOD-0	213 - 1	1									
	219 -130										
	221 - 29										
MK-87 MOD-0	213 - 4	1									
MK-9 MOD-3	328 - 2	2									
MK-9 MOD-4	328	2									
MK-9 MOD-5	328 - 2	2									
MK1-MOD3	264 - 10	1									
MK1000-1032	4	9							R	5310-638-9406	G190
	33										
	88										
MK1000-428	17	2									
MK3-MOD1	264 - 11	1									
MK3000-1032	33	7							R	5310-638-9077	G190
	39										
MK3000-428	33	1									
MK3000-832	34	16									
MK4-MOD1	264	1									
MK5-MOD0	264	1									
MK6-MOD0	264	1									
MOD-0-2		4									
MODEL 57	234 - 63	1							R	6220-569-4791	D444
	235 - 82										
	245 - 4										
	247 - 4										
	256 - 37										
	258 - 4										
	260 - 36										
	262 - 5										
	267 - 7										
	288 - 5										
	291 - 11										
MR-4	175 - 48	12							R	3110-159-1636	G730
	180										
	180	1									
MSD-3	287 - 4	4									
MS11918-4		1									
MS15001		8		M		0					
MS15001-1	11 - 39	57									
	12 - 35										
	16										
	20										
	26 - 7										
	27 - 2										
	45 - 26										
	45 -152										
	68 - 44										
	68 - 63										
	184 - 85	3									
MS15001-3	12 - 64	28							R	4730-050-4205	
	26 - 6										
	26 - 48										
	43 - 76										
	78										
	91 - 52										
	128 - 3										
	166 - 26										
	167 - 24										
	182 -190										
	184 - 86	1									
MS15001-4	13 - 95	10							R	4730-050-4207	
	25 - 35										
	45 - 71										
	65 - 76	1									
	75 - 39										
	182 -189										

PART NUMBER	FIGURE AND INDEX	TOTAL QTY.	MICRO-FILM NUMBER	MAINTENANCE CODE DATA: SOURCE CODE	INSTL CAPABILITY	PRE-INSTL CAPABILITY	RECOVERABILITY	SUPPORT EQUIPMENT	FEDERAL STOCK NUMBER DATA: COGNIZANCE CODE	FEDERAL STOCK NUMBER	MFG. CODE (TSMC)
	183 -200										
MS15002-3		28							R	4730-172-0015	
MS16036-10	55	1									
	57 - 23										
MS16036-10A	55 - 23	1									
	57										
MS16036-2	55	1							R	8400-C04-1686	GF50
	57										
MS16036-2A	55	1									
	57										
MS16036-5	55 - 20	1							Z	1680-516-819M	G650
	57 - 20										
MS16036-8	55 - 21	1							R	1680-319-9673	GF50
	57 - 21										
MS16036-9	55 - 22	1									
	57 - 22										
MS16068-1	55	1									
	56 - 9	1									
	57 - 18	1									
MS19512-4		1									
MS19513-237		1									
MS200002-9		1							R	5310-149-9127	
MS200004-13		1							R	5306-297-4253	
MS200004-16		1							R	5305	
MS20001-4-0850		1									
MS200010M20		1									
MS200018-92		2									
MS20002-10		2							R	5310-149-9126	
MS20002-12		4									
MS20002-4		4							R	5310-149-9132	
MS20002-5	72 - 15	4							R	5310-149-9131	G192
MS20002-6	72 - 11	2							R	5310-149-9130	G192
MS20002-7	16	4							R	5310-149-9129	G192
MS20002-8		2							R	5310-209-0295	
MS20002-9		6									
MS20002C10	333 - 3	6							R	5310-275-9211	G190
	334 - 2										
	335 - 2	1									
	338 - 4										
	339 - 2										
MS20002C12	334 -155	4									
	335 - 93	4									
	349 - 81	4									
MS20002C4		4							R	5310-149-9144	G192
MS20002C5	11 - 22	4							R	5310-209-3516	
	72 - 16										
MS20002C6	72 - 12	2							R	5310-149-9146	G190
MS20002C7	349 - 2										
MS20002C8	337 - 3	2									
	349 - 6										
MS20002C9	333 - 7	13							R	5310	
	334 - 6										
	334 - 10										
	335 - 6	2									
	338 - 8										
	339 - 8										
	339 - 10										
	340 - 2										
MS20004-10	14 -226	42							R	5305-274-5607	G190
	15 -272										
	16										
MS20004-11	14 -227	16							R	5305-274-5608	G190
	14 -228										
MS20004-12	15 -279	3							R	5306	
MS20004-13		4									
MS20004-14	15 -289	20							R	5306-206-1524	G190
	204 - 33										
MS20004-15	15 -291	6							R	5305-292-8154	G190
	174 - 62										
	174 - 91										
	182 -181										
MS20004-16	15 -271	16							R	5306-208-7388	G190
	15 -288										
MS20004-17	15 -270	4							R	5306-639-2944	G190
	15 -290										
MS20004-18		6							R	5306-C00-1202	G190
MS20004-19	16	2							R	5306-637-9893	G190
MS20004-20	174 - 63	6							R	5306-637-8632	G190
	174 - 92										
MS20004-21	16 -201	2							R	5306-515-7117	G190
MS20004-22		4							R	5306	
MS20004-23		2							R	5306-206-2683	D190
MS20004-24		1							R	5306	
MS20004-25	2	4							R	5306-297-4254	G190
MS20004-26	14 -220	43							R	5300-C00-1204	G190
	14 -222										
	14 -225										
	15 -255										
	15 -267										
MS20004-27	14 -217	30							R	5306-297-4285	G190
	14 -223										
	15 -259										
	15 -266										
MS20004-28	15 -248	14							R	5306-639-1760	G190
	15 -258										
	15 -265										
	174 - 80										
MS20004-29	14 -219	32							R	5306-297-4284	G190
	15 -242										
	15 -246										
	15 -297										
	15 -264										
	19 - 29										
	173 -111										
MS20004-30	2	23							R	5300-C00-1205	G190

PART NUMBER	FIGURE AND INDEX	TOTAL QTY.	MICRO-FILM NUMBER	MAINTENANCE CODE DATA: SOURCE CODE	INST'L CAPABILITY	PRE-INST'L CAPABILITY	RECOVERABILITY	SUPPORT EQUIPMENT	FEDERAL STOCK NUMBER DATA: COGNIZANCE CODE	FEDERAL STOCK NUMBER	MFG. CODE (TSMC)
	14 -221										
	15 -241										
	15 -245										
	15 -249										
	15 -260										
	15 -268										
	204 - 34										
MS20004-31	14 -214	4							R	5306-297-4286	G190
	14 -219										
	15 -149										
	15 -247										
	15 -292										
	15 -306										
MS20004-32	14 -215	4							R	5306-297-4283	G190
	15 -256										
	15 -293										
	15 -304										
	174 - 81										
MS20004-33	15 -296	8									
	15 -301										
	15 -303										
	15 -307										
MS20004-34	15 -305	2							R	5306-206-1366	G190
	174 - 82										
MS20004-35	15 -294	2									
MS20004-36	15 -295	2							R	5306-558-2764	G190
	16 -199										
MS20004-37		2							R	5306	
MS20004-4		37							R	5306-638-3216	G190
	14 -218	2									
MS20004-41	14 -216	2							R	5306-206-9641	G190
	15 -302										
	16 -197										
MS20004-6	16 - 2	42							R	5306-286-1975	G190
	16 - 7										
	16 - 64										
	16 - 68										
	16 - 72										
	16 - 76										
	16 - 82										
MS20004-7	17 - 66	8							R	5306-639-1794	G190
MS20004-8	16 - 51	23							R	5306-207-1069	G190
	16 -117										
	16 -168										
	16 -170										
MS20004-9		4							R	5306-639-1758	G190
MS20004H6	16 - 79	2									
MS20005-10	16	22							R	5306-292-8745	G190
	24 - 24										
	24 - 55										
	24 - 86										
MS20005-11		2							R	5306-637-8596	G190
MS20005-111	72 - 18	2									
MS20005-12	16	26							R	5306-292-6280	G190
MS20005-13	16	22							R	5306-639-1735	G190
MS20005-14		4							R	5306-206-1363	
MS20005-15	72 - 17	2							R	5306-292-8156	G190
MS20005-16	24 - 10	8							R	5306-207-1070	G190
MS20005-18	59A	2									
MS20005-24	2	2							R	5306-638-2685	G190
MS20005-27		2									
MS20005-29	2	2							R	5306-297-4277	G190
	19 - 7										
MS20005-30		2							R	5306-206-2685	G190
MS20005-31	2	4							R	5306-297-4278	G190
MS20005-32		2							R	5306-206-5813	G190
MS20005-33	2	2							R	5306-297-4259	G190
MS20005-34	15 -263	4							R	5306-297-4272	G190
MS20005-36	2	8							R	5306-639-1727	G190
MS20005-37	15 -244	4									
MS20005-38	15 -297	4							R	5306-637-7857	G190
MS20005-6	16 -114	8							R	5306-639-1785	G190
MS20005-7	16	22							R	5306-638-3141	G190
	17 - 62										
	17 - 65										
MS20005-8	16 -113	10							R	5306-637-9881	G190
	72 - 25										
MS20005-9	16 -207	10							R	5306-639-1748	G190
MS20006-10	15 -274	12							R	5306-206-7006	G190
	17 - 61										
	19 - 90										
MS20006-12	24 - 36	12							R	5306-638-9175	G190
	24 - 67										
	24 -102										
	70 - 7										
	358										
MS20006-13	2 - 24	2							R	5306-638-3223	G190
MS20006-14		2							R	5306-207-1075	G190
MS20006-15	15 -285	2							R	5306-297-7593	G190
	72 - 13										
MS20006-16		16							R	5306-206-2679	G190
MS20006-17	2 - 30	5							R	5306-297-4255	G190
	15 -269										
	16										
MS20006-18	16	4							R	5306-206-0804	G190
	331 - 4										
MS20006-19	2 - 23	6							R	5306-638-3173	G190
MS20006-20		4							R	5306-297-4274	G190
MS20006-21	15 -287	2							R	5305-276-5597	G190
MS20006-22		2							R	5306-208-7404	G190
MS20006-23	15 -286	2							R	5306-298-4814	G190
	23 - 10										
MS20006-24	23 - 12	8							R	5306-206-5812	G190
	23 - 35										
	23 - 42										
	23 - 49										
MS20006-25	23 - 11	6							R	5306-206-5817	G190
MS20006-26	15 -254	4							R	5305-206-0799	G190
	23 - 50										
MS20006-27	15 -251	2							R	5306-579-1504	G190
	23 - 43										
MS20006-28	23 - 36	3									
	23 - 44										
MS20006-29	15 -250	3							R	5306-292-8708	G190
	23 - 25										
	175 -108										
MS20006-30	23 - 37	2							R	5306-206-1529	G190
	23 - 45										
	68 - 55										
MS20006-31	15 -253	2							R	5306-297-4273	G190
MS20006-32	15 -252	3							R	5306-206-5815	G190
	23 - 38										
	23 - 46										
MS20006-33	23 - 39	1							R	5306-206-5818	G190
MS20006-34	2 - 19	9							R	5306-638-9424	G190
	23 - 1										
	23 - 40										
	23 - 47										
	68 - 56										
MS20006-36	23 - 2	2							R	5306-639-2985	G190
	23 - 51										
	175 - 81										
MS20006-40	23 - 21	2							R	5306-206-5816	G190
MS20006-41	23 - 3	4							R	5306-206-1517	G190
	23 - 23										
	49										
MS20006-43	23 - 4	2							R	5306-206-5810	G190
	49										
MS20006-45	23 - 24	2							R	5306-206-5811	G190
MS20006-46	23 - 22	2							R	5306-206-2684	G190
MS20006-48	23 - 25	2							R	5306-206-2696	G190
	45										
MS20006-6	17 - 10	4							R	5306-206-5814	G190
MS20006-8	16 -144	18							R	5306-297-4279	G190
	17 - 67										
	19 - 92										
MS20006-9	16	4							R	5306-286-3495	G190
	17 - 69										
MS20007-12		2							R	5306-297-4260	G190
MS20007-14		8							R	5306-206-9652	G190
MS20007-18	25 - 70	4							R	5306-637-8600	G190
MS20007-20	24 - 9	2							R	5306-297-4275	G190
MS20007-32		2							R	5306	
MS20007-33	2 - 27	6							R	5306-297-4256	G190
MS20007-34	2 - 22	4							R	5306-298-4823	G190
	15 -261										
MS20007-35	2 - 21	8							R	5306-207-7981	G190
	15 -262										
MS20007-36	2 - 20	2							R	5305-174-4742	G190
MS20007-37	2 - 28	4							R	5306-297-4262	G190
	15 -243										
MS20007-38	15 -299	2							R	5306-639-1729	G190
MS20007-39	2 - 29	3							R	5306-207-4105	G190
	15 -298										
MS20007-40	2 - 26	2							R	5306-297-4258	
MS20007-8		2							R	5306-297-4260	G190
MS20007C7	337 - 7	1									
MS20007H12		3									
MS20007H18		2									
MS20007H22	337 - 6	1									
	349 - 1										
MS20008-16	17 - 69	4							R	5305-206-0800	
MS20008-23		4							R	5306-292-6281	
MS20008-26		4							R	5306-206-2695	G190
MS20008H12		2									
MS20008H14		4									
MS20008H18	333 - 9	3							R	5306-637-9904	G190
	337 - 2	2									
	349 - 5										
MS20009-14	32 - 13	2							R	5306-576-6836	G190
MS20009-16		2							R	5306-206-2686	G190
MS20009H16		7									
MS20009H18	338 - 7	4							R	5306-638-3162	G190
MS20009H20	333 - 6	11									
	334 - 5										
	334 - 9										
	335 - 5	2									
	339 - 5										
	340 - 1										
MS20009H30	338 - 10	2							R	5306-206-1527	G190
	339 - 9										
MS20009H36		2							R	5306	
MS20009J30		1									
MS20010-100		2							R	5306-297-4257	
MS20010-104	15 -300	2									
MS20010H18	338 - 3	3							R	5306-550-0638	G190
MS20010H20	333 - 2	2									
	334 - 1										
	335 - 1	1									
	339 - 1										
MS20010H8		1									
MS20012-12	70 - 3	2									
	358										
MS20012H12	335 - 92	4									
	349 - 80	4									
MS20012H18		4									
MS20012H20	334 -158	4									
MS20014-32	91 - 20	2									
MS20014-36		3							R	5306-206-2694	G190
MS20014-37		1							R	5306-206-2689	G190

PART NUMBER	FIGURE AND INDEX	TOTAL QTY.	MICRO-FILM NUMBER	MAINTENANCE CODE DATA: SOURCE CODE	INSTL CAPABILITY	PRE-INSTL CAPABILITY	RECOVERABILITY	SUPPORT EQUIPMENT	FEDERAL STOCK NUMBER DATA: COGNIZANCE CODE	FEDERAL STOCK NUMBER	MFG. CODE (TSMC)
MS20014-39		8							R	5306-206-2688	G190
MS20014-40		1							R	5306-206-2688	G190
MS20014-41	23 - 34	3							R	5306-206-9642	G190
MS20014-42	23 - 33	6							R	5306-206-2692	G190
MS20014-43		2							R	5306-206-2687	G190
MS20014-46		6							R	5306	
MS20014-48	89 - 6	1							R	5306-639-2998	G190
MS20014-54		2							R	5306-206-2691	G190
MS20014-66	23 - 29	4							R	5306-206-2690	G190
	68 - 68										
MS20014-82		7							R	5306-206-2700	G190
MS20014-92		2							R	5306-206-2677	G190
MS20018-92	91 - 16	2							R	5306-638-3207	G190
MS20004-29		1									
MS20005-10		1							R	5306-292-8745	G190
MS20005-9		1							R	5306-639-1748	G190
MS20006-34		1							R	5306-638-9424	G190
MS20007-34		1									
MS20392-7-19	334 - 38	1									
MS20392-6-25	334 -203	1									
MS21025-31	26 - 29	2							R	5310-572-4564	G190
MS21097D8		1									
MS21818-6		1									
MS21900-6	93 -110	1							R	4730	
MS21900D4	358	4							R	4730-640-5098	G260
MS21901-4	321 - 67	2							R	4730-202-8859	G260
MS21901-4D	123 -158	4									
MS21901D4	129 - 4	4							R	4730-202-8858	G260
	136										
	143 - 67										
	144 - 25										
	149 - 2										
	323										
MS21901D6	122 - 23	4							R	4730-288-9860	G260
	123 - 21										
	124 -119										
	125 - 21										
	358										
MS21901D8	136 - 72	2									
	137 - 78										
	358										
MS21902-16	153 - 40	1									
MS21902-4	123 -101	4							R	4700-C00-4242	G260
	128 -115										
	138 - 33										
	320										
	322										
MS21902-4D		2									
	125	2									
MS21902-6	122	3							R	4700-C00-4243	G260
	123 - 27										
	134 - 45										
	134 - 63										
	137 -104										
	154 - 63										
	154 - 80										
	154 - 82										
	358										
MS21902-8	153 - 12	1									
	154 - 11										
MS21902DL		1									
MS21902DS	150 - 30	1									
MS21902D12	124 -123	4							R	4730-187-0500	G260
	125 - 95										
	125 -102										
	126										
	127										
	136 - 32										
	137 - 34										
	140 - 5										
MS21902D4	123 - 30	63							R	4700-C00-4245	G260
	124 - 40										
	124 - 76										
	124 -107										
	125 - 44										
	126										
	127										
	134 -103										
	135 - 74										
	136 - 60										
	137										
MS21902D6	122 - 72	72							R	4730-289-6089	G260
	122 - 78										
	123 -130										
	123 -136										
	124 - 68										
	124 -106										
	124 -118										
	125 - 67										
	125 - 94										
	125 -103										
	125 -124										
	126 - 54										
	127 - 59										
	127 - 74										
	143 - 70										
MS21902D8	124 - 76	18							R	4730-187-0511	G260
	136 - 43										
	136 - 55										
	136 - 81										
	136 - 94										
	136 - 95										
	137 - 51										
	137 - 63										
	137 -107										

PART NUMBER	FIGURE AND INDEX	TOTAL QTY.	MICRO-FILM NUMBER	MAINTENANCE CODE DATA: SOURCE CODE	INSTL CAPABILITY	PRE-INSTL CAPABILITY	RECOVERABILITY	SUPPORT EQUIPMENT	FEDERAL STOCK NUMBER DATA: COGNIZANCE CODE	FEDERAL STOCK NUMBER	MFG. CODE (TSMC)
	137 -112										
MS21903-D4	142 - 37	1									
MS21903-4	162 - 15	5							R	4700-C00-4069	G260
	163 - 97										
	320										
	322										
	358										
MS21903-4D		1									
	125	1									
MS21903-6	122 - 26	10							R	4730-640-7214	G260
	123 - 24										
	153 - 26										
	154 - 27										
	358										
MS21903-8	136 - 73	2							R	4730-274-4319	G260
	137 - 80										
	137 - 83										
	358										
MS21903D12		5							R	4730-640-5046	G260
	125 - 98										
	125 -106										
MS21903D4	142 - 37	13							R	4730-640-5850	G260
	143										
	144										
	152 - 17										
	158 - 11										
	159										
	163 - 60										
	163 - 67										
	163 - 90										
	164 -119										
	321 - 42										
	321 - 50										
MS21903D5	321 - 5	2							R	4730-640-5845	G260
	323 - 17										
MS21903D6	122 - 46	29							R	4730-640-7211	G260
	122 - 53										
	122 - 57										
	123 -111										
	123 -115										
	124 - 34										
	124 -100										
	125 - 24										
	125 - 55										
	125 - 99										
	125 -107										
	127 - 75										
	136 -118	1									
	142 - 3	1									
	321 - 7										
MS21903D8	136 -103	3							R	4700-C00-4247	G260
	150 - 10										
	374 - 11										
MS21904-4	322 - 78	1									
MS21904-4D	123 -147	4									
MS21904-6	137 -108	2									
	322 - 18										
	322 - 67										
MS21904D12	127 -102	3							R	4730-640-5093	G260
MS21904D4	141 - 74	13							R	4730-640-5091	G260
	164 - 31										
	164 - 37										
	164 - 75										
	165 - 26										
	165 - 45										
	357										
MS21904D6	129 - 24	5							R	4730-194-1066	G260
	136 - 61										
	137 - 68										
	141 - 83										
	142 - 43										
	143 - 58										
	144 - 16										
	320 - 51										
	323 - 5										
MS21904D8	136 - 42	3							R	4730-640-5091	G260
	136 - 96										
	137 - 44										
MS21905-4D	165 - 29	2									
MS21905-6	173 - 34	2							R	4730-595-0151	G250
MS21905-6D	141 - 87	2									
	142 - 47										
MS21905-8		1							R	4730	
MS21905D12	124 - 82	2							R	4730-640-0576	G260
	126 - 4										
MS21905D4	124 - 88	4							R	4730-640-1939	G260
	141 - 71										
	164 - 32										
	164 - 45										
	165 - 29										
	321 - 69										
MS21905D6	122 - 56	14							R	4730-640-5116	G260
	123 -124										
	124 - 23										
	125 - 36										
	125 - 64										
	126 - 13										
	127 - 13										
	127 - 48										
	136 - 62										
	137 - 69										
	141 - 14										
	143 - 62										
MS21905D8	136 - 56	2							R	4730-277-9276	G260
	137 - 45										

PART NUMBER	FIGURE AND INDEX	TOTAL QTY.	MICRO-FILM NUMBER	MAINTENANCE CODE DATA: SOURCE CODE	INSTL CAPABILITY	PRE-INSTL CAPABILITY	RECOVERABILITY	SUPPORT EQUIPMENT	FEDERAL STOCK NUMBER DATA: COGNIZANCE CODE	FEDERAL STOCK NUMBER	MFG. CODE (TSMC)
	137 - 64										
MS21906D12	127 - 4	1									
MS21906D6	124 - 6	3							R	4730-289-5498	G260
	129 - 33										
MS21907-12D		1									
	125 -112	1									
MS21907-4	84 - 11	3							R	4730	
	133 - 8										
MS21907-6	134 - 42	2							R	4730	
	153 - 22										
	154 - 21										
	162 - 3										
	358										
MS21907-8D		1									
	125 -113	1									
MS21907-8	136	2									
	137 - 96										
	358										
MS21907D12		1							R	4730	
MS21907D4	122 - 89	19							R	4730-640-1215	G260
	123 - 98										
	126 - 76										
	127 - 98										
	129 - 5										
	132 - 7										
	136 - 93										
	136 - 99										
	137 -111										
	158 - 67										
	166 - 2	1									
	321 - 80										
MS21907D6	123 -120	15							P	4730-278-8165	G260
	124 -114										
	126 - 11										
	127 - 11										
	129 - 14										
	136 - 54										
	136 - 63										
	136 -117										
	136 -119										
	137 - 60										
	137 - 70										
	150 - 37										
	159 - 34	2									
MS21907D8	122 - 62	2							R	4730-287-1119	G260
	136 - 83										
	137 -110										
MS21908-4	128 - 67	12							R	4700-C00-4250	G260
	153 - 11										
	153 - 45										
	154 - 10										
	154 - 46										
	163 - 94										
	163 -100										
	320 - 14										
	320 - 22										
	320 - 29										
	320 - 36										
	322 - 13										
MS21908-4D	136 -100	1									
MS21908-6	122 - 33	6									
	123										
	136 - 78										
	137 - 91										
	154 - 54										
	154 - 58										
	162 - 4										
	320 - 39										
	358										
MS21908-8	136 - 74	6									
	137 - 79										
	153 - 6										
	153 - 10										
	154 - 6										
	154 - 9										
	358										
MS21908DG		1									
MS21908D12	130 - 2	4							R	4730-640-0831	G260
MS21908D3	84 - 34	1		P1					R	4730-640-5089	G260
MS21908D4	123 - 97	75							R	4730-640-0830	G260
	123 -104										
	124 - 42										
	126 - 41										
	127 - 41										
	130 - 12										
	134										
	135 -101										
	136 - 84										
	137 -115										
	159 - 23	4									
	159 - 28	2									
	159 - 43	4									
MS21908D6	123 -121										
	123 -131										
	122 - 37	84							R	4730-278-8160	G260
	122 - 63										
	122 - 73										
	124 - 15										
	124 - 62										
	124 - 93										
	125										
	126 - 15										
	143 - 60										
	159 - 37	2									
MS21908D8	134 - 75	10							R	4730-640-5092	G260

PART NUMBER	FIGURE AND INDEX	TOTAL QTY.	MICRO-FILM NUMBER	MAINTENANCE CODE DATA: SOURCE CODE	INSTL CAPABILITY	PRE-INSTL CAPABILITY	RECOVERABILITY	SUPPORT EQUIPMENT	FEDERAL STOCK NUMBER DATA: COGNIZANCE CODE	FEDERAL STOCK NUMBER	MFG. CODE (TSMC)
	135 - 47										
	136 - 47										
	136 - 82										
	137 - 59										
	137 -109										
	140 - 8										
	170 - 4										
MS21909-4D	126	1									
	127										
MS21909-6	134 - 41	1							R	4730-278-2770	G250
	321 - 18										
MS21909-6D	134 -115	1									
	135 - 86										
	136 -135										
MS21909D4	148 - 7	3							R	4730-640-0817	G260
	164										
	321 - 62										
	322 - 91										
MS21909D6	124 - 57	13							R	4730-516-4824	G260
	125	2									
	126 - 33										
	127 - 33										
	132 - 1										
	136										
	137 -118										
	141 - 6										
	141 - 22										
	141 - 31										
	163 - 9										
	321 - 22										
MS21909D8	134 - 79	2							R	4730-277-9274	G260
	135 - 48										
	136 - 41										
	137 - 43										
MS21910D8-6		2									
MS21910-4	320	3							R	4730-278-2769	G250
	321 - 14										
	322										
MS21910-8	136 - 79	2									
	137 - 94										
	137 -106										
	358										
MS21910-8-6	137 - 86	2									
MS21910D12	124 - 79	1							R	4730-640-5119	G260
MS21910D4	127	3							R	4730-640-5115	G260
	139 - 29										
	164										
	165 - 17										
	321 - 72										
MS21910D6	124 - 8	5							R	4730-277-9256	G260
	136 -133										
	139 - 20										
	139 - 36										
	164 - 4										
	165 - 4										
	322 - 69										
MS21910D8	137 - 61	2							R	4730-277-9254	G260
MS21911-4	123 - 57	6							R	4730-278-8398	G250
	320										
	322										
MS21911-6	320	2							R	4730-278-8397	G250
	322										
MS21911-8	136 - 75	2									
	137 - 99										
	153 - 33										
	154 - 34										
	154 - 34	1									
	358										
MS21911D4	123 - 81	2							R	4730-640-5111	G260
	126 - 37										
	127 - 37										
	141										
	159 - 17	2									
MS21911D6	126 - 29	7							R	4730-277-9257	G260
	127 - 29										
	136 -112										
	136 -123										
	139 - 9										
	322 - 15										
MS21911D6-5		2									
MS21911D8	136 - 38	2							R	4730-277-9255	G260
	137 - 40										
	137 - 62										
MS21912-4	322 - 3	3									
	322 - 52										
MS21912-6	123 - 32	5							R	4700-C00-4255	G260
	123 - 43										
	134 - 43										
	134 - 67										
	153 - 19										
	154 - 18										
	154 - 57										
	154 - 73										
	358										
MS21912-8	136 - 80	2							R	4730-246-9519	G260
	137 -105										
	358										
MS21912D4	123 - 74	24							R	4730-640-5114	G260
	124 - 45										
	126										
	127										
	136 -120										
	142 - 11										
	142 - 16										
	143 - 42										

PART NUMBER	FIGURE AND INDEX	TOTAL QTY.	MICRO-FILM NUMBER	MAINTENANCE CODE DATA: SOURCE CODE	INST'L CAPABILITY	PRE-INST'L CAPABILITY	RECOVERABILITY	SUPPORT EQUIPMENT	FEDERAL STOCK NUMBER DATA: COGNIZANCE CODE	FEDERAL STOCK NUMBER	MFG. CODE (TSMC)
	148 - 8										
	152 - 37										
	159 - 46	2									
MS21912D6	124 - 72	13							R	4730-246-9520	G260
	125	2									
	126 - 59										
	126 - 69										
	127 - 62										
	127 - 86										
	134 -116										
	135 - 87										
	136 -132										
	136 -136										
	137 -117										
	159 - 14	2									
MS21914WDG10		2									
MS21915D4		1									
MS21915D6-4	136	4							R	4730	
	137										
MS21915D8-6	321 - 30	2							R	4730	
MS21916-4		2									
MS21916-6-4	162 - 5	12							R	4700-C00-4266	G260
	162 - 12										
	320 - 8										
	320 - 31										
	321 - 15										
	322 - 7										
	322 - 60										
	358										
MS21916-8-16	156	1									
MS21916-8-6	137 -101	5							R	4730-278-8392	G260
	153 - 14										
	153 - 28										
	153 - 31										
	154 - 13										
	154 - 29										
	154 - 32										
	358										
MS21916D-4	122 - 40	1									
MS21916D12-6		1							R	4730-640-5040	G260
	125 -122	1									
MS21916D12-8	124	1							R	4730-640-5042	G260
	125 -116	1									
MS21916D16-12	140	1									
MS21916D4	322	1									
MS21916D6-4	122 - 84	58							R	4730-640-7201	G260
	123 - 47										
	123 - 55										
	123 - 69										
	123 - 79										
	123 -142										
	124 - 52										
	125 - 46										
	125 - 49										
	125 - 72										
	126 - 24										
	126 - 35										
	127 - 24										
	143 - 64										
	143 - 73										
	159 - 40	2									
MS21916D6-5	125	2									
	321 - 4	2							R	4730-640-7200	G260
	323 - 12										
MS21916D8-4	163	1							R	4730-640-7200	G260
MS21916D8-6	136 - 39	20							R	4730-640-7199	G260
	136 - 46										
	136 - 77										
	136 - 97										
	136 -106										
	137 - 41										
	137 -113										
	150 - 1										
	150 - 7										
	153 - 2										
MS21917-3	84	2							R	4730-595-0147	G260
MS21917-4		38									
MS21917-6		36							R	4730	
MS21917-8		18							R	4730-279-6661	
MS21917D12		18							R	4730	
MS21917D16		2									
MS21917D4		252							P	4730	
MS21917D6		592							P	4730-640-5045	G260
MS21917D8		68							R	4730-497-4469	G260
MS21918-12		18							P	4730	
MS21918-16		2									
MS21918-3	84	2							R	4730-202-7889	G260
MS21918-4		281							R	4730-517-7787	G260
MS21918-6		571							R	4730-203-6944	G260
MS21918-8		86							R	4730-203-6945	G260
MS21918D4		4									
MS21918D7		2									
MS21919-DG23	342 - 27	1									
MS21919-DG26	342	1									
MS21919-DG30	342 - 28	1									
MS21919-DG34	342 - 29	1									
MS21919DC13	350 - 29	1									
MS21919DF11		3							R	5340-200-3054	
MS21919DF12	355 -228	5							R	5340-598-4116	GH80
	PG. 1018										
	PG. 1022										
MS21919DF13	PG. 1022	2							R	5340-664-8181	GH80
MS21919DF16	PG. 1022	2							R	5340-598-4134	GH80
MS21919DF20	PG. 1022	3							R	5340-514-3018	GH80
MS21919DF22	PG. 1022	1							R	5340-598-4119	GH80

PART NUMBER	FIGURE AND INDEX	TOTAL QTY.	MICRO-FILM NUMBER	MAINTENANCE CODE DATA: SOURCE CODE	INST'L CAPABILITY	PRE-INST'L CAPABILITY	RECOVERABILITY	SUPPORT EQUIPMENT	FEDERAL STOCK NUMBER DATA: COGNIZANCE CODE	FEDERAL STOCK NUMBER	MFG. CODE (TSMC)
MS21919DF24		2							R	5340-598-0147	
MS21919DF28		1									
MS21919DF5	355 -225	5							R	5340-290-0780	GH80
	PG. 1018										
	PG. 1022										
MS21919DF6		9							R	5340-290-0781	
MS21919DF8	355	4							R	5340-290-0783	GH80
	PG. 1018										
	PG. 1022										
MS21919DG10	212 - 21	2									
	358	3							R	5340-141-6999	GH80
MS21919DG11		1									
MS21919DG12	PG. 1014	9							R	5340-200-2723	GH80
	PG. 1019										
	PG. 1022										
MS21919DG13		10									
MS21919DG14		8									
MS21919DG15	358	I									
MS21919DG16	PG. 1014	5							R	5340-598-4195	GH80
MS21919DG17	PG. 1019	1		M		O			R	5340-598-4156	GH80
	PG. 1022										
MS21919DG18		3									
MS21919DG19	PG. 1014	3							R	5340-598-4197	GH80
MS21919DG20	321	12							R	5340-292-3614	GH80
	358										
	PG. 1014										
MS21919DG22	94 - 33	2									
	94 - 34										
	97 - 28										
	PG. 1014										
MS21919DG23		1							R	5340-205-6332	GH80
MS21919DG24	94 - 33	6							R	5340-205-6333	GH80
	94 - 34										
	97 - 28										
	355										
	PG. 1014										
MS21919DG26		5							R	5340-664-8154	GH80
MS21919DG28		3									
MS21919DG3	PG. 1014	6							R	5340-205-6300	GH80
MS21919DG32		5							R	5340-664-7301	GH80
MS21919DG4	351 -104	88							R	5340-205-6301	GH80
	351 -105										
	357										
	358										
	PG. 1014										
	PG. 1022										
MS21919DG5	355	13							R	5340-597-0156	GH80
	PG. 1014										
	PG. 1022										
MS21919DG6	357	231							R	5340-598-4173	GH80
	358										
MS21919DG7	178 - 23	22							R	5340-597-6123	GH80
MS21919DG8	358	39							R	5340-598-0597	GH80
	PG. 1014										
MS21919DG9		15									
MS21919DH13		1							R	5340-664-8184	GH80
MS21919DH14		1							R	5340-597-6160	GH80
MS21919DH16		1							R	5340	
MS21919DH20	350	19							R	5340-290-0783	GH80
MS21919DH24		3									
MS21919DH32	351	1									
MS21919DH6		3							R	5340-514-3010	GH80
MS21919DH7		19									
MS21919D20		2									
MS21919D28		6									
MS21919D40		5									
MS21919D6-7		8									
MS21919D620		2									
MS21919D67	173	1									
MS21919F10		2							R	5340-597-9408	GH80
MS21919F12	PG. 1022	2							R	5340-597-6153	GH80
MS21919F16	PG. 1022	1									
MS21919F19	PG. 1022	1							R	5340-550-5696	GH80
MS21919F22		1									
MS21919F4		4							R	5340-200-8027	
MS21919G10	178 - 28	2							R	5340-298-9409	GH80
MS21919H10		4							R	5340	
MS21919H12		8							R	5340-598-0148	
MS21919H14	355 -230	2									
	PG. 1014										
	PG. 1018										
	PG. 1022										
MS21919H15	358	2									
MS21919H16	358	3							R	5340-598-0168	
MS21919H19	358	1									
MS21919H2		6									
	358	1									
MS21919H4		15							R	5340-598-8864	GH80
MS21919H5		16									
MS21919H6	358	31							R	5340-205-6221	GH80
MS21919H7		1							R	5340	
MS21919H8		6									
MS21919H9		3							R	5340-598-4172	
MS21919SDG10		1									
MS21919SDG16		1									
MS21919WDC2		4									
MS21919WDG-6	285A- 77	1									
MS21919WDG10		31							R	5340-644-8162	GH80
MS21919WDG11		12							R	5340	
MS21919WDG12		7									
MS21919WDG13		9							R	5340	
MS21919WDG14		19							R	5340-286-9294	GH80
MS21919WDG15		5							R	5340	
MS21919WDG16		22							R	5340	
MS21919WDG17		5									

PART NUMBER	FIGURE AND INDEX	TOTAL QTY.	MICRO-FILM NUMBER	MAINTENANCE CODE DATA: SOURCE CODE	INSTL CAPABILITY	PRE-INSTL CAPABILITY	RECOVERABILITY	SUPPORT EQUIPMENT	FEDERAL STOCK NUMBER DATA: COGNIZANCE CODE	FEDERAL STOCK NUMBER	MFG. CODE (TSMC)
	285A- 23	1									
MS21919WDG18		11									
MS21919WDG19		3									
MS21919WDG2	189 - 27	14		M		0			R	5340-664-8165	GH80
	328 - 17										
	357										
MS21919WDG21		8							R	5340-664-7306	GH80
MS21919WDG22		13							R	5340	
MS21919WDG23		12									
MS21919WDG24		3									
MS21919WDG3		54							R	5340	
MS21919WDG32		1									
MS21919WDG4	213	54							R	5340-664-8171	GH80
	357										
MS21919WDG5		26							R	5340-200-8560	GH80
MS21919WDG6	284 - 51	84							R	5340-598-0146	GH80
	285 - 98										
	287 - 44										
	287A- 55										
MS21919WDG7	269	3									
	292	30							R	5340-200-8559	GH80
MS21919WDG8		44							R	5340-291-5347	GH80
MS21919WDG9	292 - 16	20							R	5340-286-9443	GH80
MS21919WDH6		12									
MS21919WD6-4		2									
MS21919WG12		3									
MS21919WG6-12		1									
MS21919WH10		1									
MS21919WH6		1							R	5340	
MS22903D6		1							R	4730-640-7211	G260
MS24143-D1	285A- 21	1									
MS24143-1	285 - 15										
MS24181D1	285A- 71	2									
	287A- 31										
MS24360	121 - 17	1							R	1680-698-5679	Y120
MS25002-3		1							R	5930-503-0322	D334
MS25008-1	229 - 73	1									
MS25010-3	271 - 50	42							R	6210-295-0383	D336
	293 - 17										
MS25010-3A	233 - 6	12									
	271 - 8										
	296 - 14										
	300 - 16										
	300 - 17										
	301 - 12										
	305 - 18										
	306 - 22										
	313 - 4										
	315 - 23										
	318 - 17										
MS25010-4	233	3							R	6210-283-9708	D336
	278 - 35										
MS25010-8	264 - 77	1									
MS25016-3		18							R	5430-548-9061	D444
MS25017-10	210	43							R	5925-173-7155	D334
	217										
	220 - 1										
	220 - 2										
	224										
	227										
	230										
	241										
	251										
	271										
	280	1									
	319 - 10										
MS25017-15	229 - 1	14							R	5925-173-7156	D334
	229 - 4										
	229 - 5										
	241										
	251										
	254										
	265										
	268										
	272	1									
	275										
	286 - 6	1									
	306 - 57										
	319 - 14										
MS25017-20	227	4							R	5925-173-7157	D334
	235										
	261										
	268										
	309 - 7										
	319 - 16										
	319 - 17										
	319 - 18										
MS25017-25	209	1									
	235	14							R	5925-258-9715	D334
	246										
	250 - 1										
	250 - 2										
	296										
MS25017-26		1									
MS25017-35	216 - 6	1							R	5925-173-7154	D334
	235										
	296										
MS25017-5	211	112							R	5925-173-7158	D334
	247										
	251										
	254										
	261										
	268										
	271										
	273										

PART NUMBER	FIGURE AND INDEX	TOTAL QTY.	MICRO-FILM NUMBER	MAINTENANCE CODE DATA: SOURCE CODE	INSTL CAPABILITY	PRE-INSTL CAPABILITY	RECOVERABILITY	SUPPORT EQUIPMENT	FEDERAL STOCK NUMBER DATA: COGNIZANCE CODE	FEDERAL STOCK NUMBER	MFG. CODE (TSMC)
	276										
	277 - 5										
	319 - 13										
MS25018		1									
MS25018-1	279 - 1	1							R	5935-204-5726	D336
MS25024-1	226 - 17	1							R	5945-204-9619	D444
MS25024-2	220 - 11	1							R	5945-553-9965	D334
	220 - 12										
	237										
MS25028-6	261 - 7	5							R	5930-259-7304	D334
	281 - 4										
	300 - 18										
	300 - 26										
	301 - 13										
MS25028-8	294	1									
	301 - 24										
MS25029-5	215 - 12	1									
	216 - 12										
	305 - 16										
	306 - 20										
MS25029-5 5	213 - 18	1									
MS25041-2	263	2							R	6210-284-1466	D336
	265 - 5										
	284 - 66										
	284A- 27										
	315 - 9										
	318 - 4										
MS25041-3		1									
MS25041-4		1									
MS25041-6	283 - 5	1							R	6210-635-3354	D336
	286 - 9										
MS25043-16C	287A- 41	1									
MS25043-20C	269A- 46	1									
MS25068-10	229 - 7	1							R	5930-548-9670	D334
	229 - 8										
MS25083-1BC3	21 - 36	3									
MS25083-1BC4	17 - 44	1									
MS25083-1BC5	17 - 43	1									
	17 - 52										
MS25083-2BB6	286A- 18	1									
MS25101-3	270 - 66	1									
MS25183-1452P	271 - 23	1									
MS29513-11		658							R	5330-248-3831	GB90
MS26751-4-0220		1									
MS28005-5	255 - 9	3							R	6685-515-4710	V170
	255 - 24										
	255 - 35										
	255 - 42										
MS28025-1	315 - 67	2									
	318 - 52										
MS28027-1	209 - 26	4									
	209 - 38	1									
	210 - 34										
	211 - 8										
	276 - 4										
	315 - 55										
	318 - 50										
MS28033-1	239 - 1	1							R	6680-C01-8950	VIWA
	315 - 45										
	318 - 40										
MS28039-11		1									
MS28042-4	318 - 76	1									
MS28074-2	233A- 2	1									
	318	1									
MS28513-218	101	1									
MS28720-6	122 - 34	7							R	1650-288-6908	Y120
	123 - 41										
	124 - 13										
	124 - 17										
	125 - 29										
	126 - 28										
	126 - 61										
	127 - 28										
	127 - 64										
	163 - 10										
	169 - 1										
MS28720-8	134 - 74	1							R	2915-289-4239	
	135 - 46										
	169										
MS2874-4-D324		1									
MS28740	328 - 22	1									
MS28740-20		1							R	4730-278-5690	
MS28740-20D	PG. 1026	1									
MS28740-8	PG. 1017	1							R	4730-278-8227	G250
	PG. 1025										
MS28741-0240	358	2									
MS28741-0250		2									
MS28741-12-0120	355 -126	1									
	PG. 1014										
MS28741-12-0127	136 - 27	1									
	355 - 56										
	PG. 1019										
	PG. 1022										
	PG. 1027										
MS28741-12-0134	125 - 8	2									
	136 - 8										
	355 - 41										
	355 - 49										
	PG. 1019										
	PG. 1022										
	PG. 1023										
MS28741-12-0240	122 - 15	1									
	123 - 19										
	355 - 33										
	PG. 1019										

PART NUMBER	FIGURE AND INDEX	TOTAL QTY.	MICRO-FILM NUMBER	MAINTENANCE CODE DATA: SOURCE CODE	INSTL CAPABILITY	PRE-INSTL CAPABILITY	RECOVERABILITY	SUPPORT EQUIPMENT	FEDERAL STOCK NUMBER DATA: COGNIZANCE CODE	FEDERAL STOCK NUMBER	MFG. CODE (TSMC)
	PG. 1023										
MS28741-12-0350	355 -122	9									
	PG. 1014										
	PG. 1023										
MS28741-12-350		1									
MS28741-16-0104		1									
MS28741-16-0122	137 - 24	1									
	355 - 64										
MS28741-16-0144		1									
MS28741-16-0174	137 - 11	1									
	355 - 68										
	PG. 1021										
	PG. 1027										
MS28741-20-015[illegible]	100 - 52	1									
	107										
	108										
MS28741-20-015[illegible]	108										
	98 - 22	1									
	99 - 27										
	107										
MS28741-4	328 - 22	1							R	4720-289-0750	PWAC
MS28741-4-0033	351 - 80	1									
MS28741-4-0090		1									
MS28741-4-0094	143 - 67	1									
MS28741-4-0100		2									
MS28741-4-0120	143	1									
MS28741-4-0124		1									
MS28741-4-0130	142 - 55	1									
MS28741-4-0134		1									
MS28741-4-0135	123 -155	1									
MS28741-4-0140	141 - 94	1									
	355 -202										
	PG. 1014										
	PG. 1023										
MS28741-4-0145	129 -154	1									
MS28741-4-0150		2									
MS28741-4-0152		1									
MS28741-4-0154		1							R	4720-203-3496	G260
MS28741-4-0160		2									
MS28741-4-0164	141 -105	2									
MS28741-4-0170	142 - 50	1									
MS28741-4-0174		2									
MS28741-4-0176	129 - 3	2									
	143 - 77										
MS28741-4-0184	273 - 12	1									
	355 - 81										
	PG. 1016										
	PG. 1025										
MS28741-4-0194		2									
MS28741-4-0224		2									
MS28741-4-024		2									
	125	1									
	355 -229	1									
	PG. 1018										
MS28741-4-0274		2									
MS28741-4-0324	123 - 97	1									
MS28741-4-0334		2									
MS28741-4-0490	355 - 39	3									
	PG. 1014										
	PG. 1023										
MS28741-4-104		1									
MS28741-4-1062	63 - 10	1									
MS28741-4-1342		1									
MS28741-4-9166		1									
MS28741-40033		1									
MS28741-6-0113	136 - 23	1									
	355 - 60										
	PG. 1019										
	PG. 1023										
	PG. 1027										
MS28741-6-0117		1									
MS28741-6-0122	PG. 1020	1									
	PG. 1026										
MS28741-6-0130	355 -146	1									
	PG. 1014										
MS28741-6-0134	137 - 8	2									
	355 - 69										
	PG. 1021										
	PG. 1027										
MS28741-6-0140		1									
MS28741-6-0156		1									
MS28741-6-0160	136 - 11	2									
	137 - 21										
	355 - 53										
	355 - 63										
	PG. 1019										
	PG. 1020										
	PG. 1026										
MS28741-6-0170		2									
MS28741-6-0174	122 - 22	1									
	358										
	123 - 20										
MS28741-6-0190	125 - 11	1									
	355 - 43										
	PG. 1019										
MS28741-6-0200	125 - 20	1									
	358										
MS28741-6-0210		2									
MS28741-6-0240		1									
MS28741-6-0250		2									
MS28741-6-0290	122 - 12	1									
	123 - 10										
	355 - 35										
	PG. 1019										
	PG. 1023										

PART NUMBER	FIGURE AND INDEX	TOTAL QTY.	MICRO-FILM NUMBER	MAINTENANCE CODE DATA: SOURCE CODE	INSTL CAPABILITY	PRE-INSTL CAPABILITY	RECOVERABILITY	SUPPORT EQUIPMENT	FEDERAL STOCK NUMBER DATA: COGNIZANCE CODE	FEDERAL STOCK NUMBER	MFG. CODE (TSMC)
MS28741-6-0300	355 -227	1									
	PG. 1018										
	PG. 1023										
MS28741-6-0334	96 - 51	2									
MS28741-6-0360		1									
MS28741-6-0414	355 -203	1									
	PG. 1014										
	PG. 1023										
MS28741-6-0430		2									
MS28741-6-0500	102 -152	2									
	103 -186										
MS28741-6-130	PG. 1023	1									
MS28741-6-160	PG. 1023	1									
MS28741-6-190	PG. 1023	1									
MS28741-8-0104		1									
MS28741-8-0190		1									
MS28741-8-0205	PG. 1023	1									
MS28741-8-0210	355 -124	1									
	PG. 1014										
MS28741-8-0290	134 - 30	1									
	135 - 27										
	358										
MS28741-8-0414		1									
MS28744-0324		1									
MS28748D16	PG. 1017	1							R	4730	
	PG. 1025										
MS2875-4-0192		2									
MS28750-200	PG. 1019	1									
MS28750D20-24	PG. 1019	1							R	4730	
	PG. 1026										
MS28751-4-0084	126 - 45	4							R	4720-202-8772	G260
	127 - 45										
	162 - 16										
	358										
MS28751-4-0090	163 - 25	1							R	4700-C00-4272	G260
	163 - 73										
MS28751-4-0094	143 - 7	2							R	4700-C00-4273	G260
MS28751-4-0100	156 - 28	1									
	159 - 30	1									
MS28751-4-0110	358	1									
MS28751-4-0114	144	4							R	4700-C00-4275	G260
	158 - 68										
	159 - 18	1									
	164										
MS28751-4-0120	163 - 20	1							R	4720-203-9736	G260
MS28751-4-0124	134 -102	1									
	135 - 75										
MS28751-4-0130	141 - 73	4							R	4700-C00-4276	G260
	158 - 29										
	159 - 29	1									
	163 - 71										
MS28751-4-0132	144 - 6	4									
MS28751-4-0134	124 - 48	1							R	4720	
MS28751-4-0140	125	1									
	158 - 69	2									
	159 - 19	1									
	163 - 95										
MS28751-4-0144	135 - 99	1							R	4720	
MS28751-4-0154	124	2							R	4720-203-3496	G260
	164										
MS28751-4-0160	163 - 24	2							R	4700-C00-4280	G260
	163 - 72										
MS28751-4-0164	143 - 43	1									
MS28751-4-0166		2									
MS28751-4-0170	134	2							R	4700-C00-4281	G260
	135										
	142 - 30										
	142 - 38										
MS28751-4-0174	143	1							R	4700-C00-4282	G260
MS28751-4-0180	144 - 7	1							R	4720-200-0496	G260
MS28751-4-0184	164 -120	4							R	4720	
MS28751-4-0190	125	1									
	129	1									
MS28751-4-0197		2									
MS28751-4-0200		2									
	125 - 87	1									
MS28751-4-0220		1									
	125	1									
MS28751-4-0240	123 -107								R	4720-200-0496	G260
MS28751-4-0274		1									
	125 - 86	1									
MS28751-4-0290	163 - 98	2							R	4720-142-1985	G260
MS28751-4-190		1									
MS28751-6-0164	154 - 56	2									
MS28751-6-0200	154 - 70	2									
MS28751-6-0220		2									
MS28751-6-0240	153 - 23	2							R	4720-529-0920	G250
	154 - 22										
	358										
MS28751-6-0250	153 - 25	2							R	4720-540-1627	G250
	154 - 26										
	358										
MS28782-1	141 - 54	4							R	5330-171-5052	GB90
	155 - 71										
	164 - 96										
	165 - 89										
MS28782-11	141 - 66	8							R	5330-171-5889	GB90
	146 - 9										
	155 - 43										
MS28782-12	143 - 39	8							R	5330-171-5048	GB90
	168 - 18										
MS28782-13	155 - 42	2									
	155 - 67										
MS28782-14	128 - 55	20							R	5330-171-6754	GB90
	128 - 63										

PART NUMBER	FIGURE AND INDEX	TOTAL QTY.	MICRO-FILM NUMBER	MAINTENANCE CODE DATA: SOURCE CODE	INSTL CAPABILITY	REMOVAL CAPABILITY	RECOVERABILITY	SUPPORT EQUIPMENT	FEDERAL STOCK NUMBER DATA: COGNIZANCE CODE	FEDERAL STOCK NUMBER	MFG. CODE (TSMC)
	138 - 61										
	146 - 17										
	155 - 58										
MS28782-15	168 - 21	4							R	5330-171-5897	GB90
MS28782-16	128 - 50	8							R	5330-171-5075	GB90
	128 - 58										
	138 - 31										
	138 - 57										
	147 - 19										
	155 - 54										
MS28782-18	128 -113	12							R	5330-171-6746	GB90
	138 - 53										
	142 - 23										
	155 - 31										
	157 - 24										
	166 - 17										
	167 - 13										
MS28782-19	145 - 26	10							R	5330-171-6740	GB90
MS28782-21	128 - 8	20							R	5330-171-6767	GB90
	128 - 20										
	128 - 23										
	128 - 39										
MS28782-22	84 - 17	4							R	5330-171-6757	GB90
	168 - 9										
MS28782-23	138 - 29	16							R	5330-171-6758	GB90
	141 - 64										
	143 - 31										
MS28782-24		2							R	5330-171-6760	GB90
MS28782-26	146 - 19	4							R	5330-171-6766	GB90
MS28782-27	157 - 14	6							R	5330-171-6695	GB90
MS28782-29	166 - 19	4							R	5330-171-5073	GB90
	167 - 1	6									
MS28782-3		4							R	5330-171-5074	GB90
	145 - 17	2									
MS28782-31	84 - 23	2							R	5330-171-5908	GB90
MS28782-33	128 - 14	8							R	5330-171-6770	GB90
	128 - 25										
MS28782-36	84 - 48	2							R	5330-171-5070	GB90
MS28782-4		4							R	5330-171-5063	
MS28782-48		2							R	5330-171-5062	
MS28782-5	84 - 44	4							R	5330-171-5044	GB90
	155 - 51										
	167 - 21										
MS28782-6	155 - 48	4							R	5330-641-0103	GB90
	155 - 69										
MS28782-7	84 - 51	16							R	5330-171-5042	GB90
	142 - 33										
	147 - 15										
	161 - 14										
	161 - 18										
MS28782-8		2							R	5330-171-5885	GB90
MS28782-9	142 - 26	9							R	5330-641-1571	GB90
	147 - 9										
	167 - 2										
MS28783-1	84 - 75	2							R	5330-171-6693	GB90
	143 - 24										
MS28783-14	132 - 25	2							R	5330-171-5072	GB90
MS28783-15	84 - 40	4							R	5330-171-5914	GB90
	84 - 56										
MS28783-2		4							R	5330-171-5893	GB90
MS28783-4	157 - 6	2							R	5330-171-5100	GB90
MS28783-6	166 - 23	4							R	5330-171-5099	GB90
MS28783-7	145 - 14	4							R	5330-171-5891	GB90
MS28783-8	84 - 19	8							R	5330-171-5051	GB90
	84 - 28										
MS28784-213	157 - 25	1									
MS28784-222	157 - 15	1							R	5330-297-9990	GB90
MS28784-226	157 - 7	1									
MS28884-16		2									
MS28885-16	98 - 7	8							R	4820-595-4423	G260
	116 - 17										
	116 - 74										
MS28885-24	95 - 73	1							R	4820-287-2247	G250
	97 - 74										
MS29196D8-6	137 - 46	5									
MS29511-32		1									
MS29512	PG. 1012	1									
MS29512-10	93 - 50	2							R	5330-263-8032	
	94 - 48										
MS29512-119	98	1									
MS29512-12	93 - 22	6							R	5330-263-8033	GB90
	93 - 34										
	94 - 15										
	94 - 32										
	95 - 20										
	95 - 32										
	97 - 23										
	97 - 27										
	98 - 51										
	99 - 55										
	338 - 13										
MS29512-16	98 - 8	4							R	5330-263-8034	GB90
	116 - 12										
	355										
	PG. 1014										
	PG. 1023										
MS29512-2	98 - 52	13							R	5330-263-8035	GB90
	98 - 55										
	98 - 92										
	98 -115										
	99 - 57										
	99 - 80										
	99 -125										
	99 -145										
	100 -180										

PART NUMBER	FIGURE AND INDEX	TOTAL QTY.	MICRO-FILM NUMBER	MAINTENANCE CODE DATA: SOURCE CODE	INSTL CAPABILITY	REMOVAL CAPABILITY	RECOVERABILITY	SUPPORT EQUIPMENT	FEDERAL STOCK NUMBER DATA: COGNIZANCE CODE	FEDERAL STOCK NUMBER	MFG. CODE (TSMC)
	101										
MS29512-218		1									
MS29512-24	96 - 41	3							R	5330-263-8036	GB90
	102 -141										
	103 -136										
	358										
MS29512-30	100 -155	1									
MS29512-4	93 - 89	18							R	5330-263-8028	GB90
	93 - 91										
	94 -151										
	94 -153										
	94 -159										
	94 -161										
	98 - 81										
	98 - 84										
	99 - 97										
	99 -114										
	100 -200										
	100 -219										
	104 - 6	2									
	104 - 8	2									
	349	3									
MS29512-5	99 - 99	1							R	5330-263-8029	GB90
	100 -202										
	100 -212										
	249										
MS29512-6	93 - 72	15							R	5330-263-8030	GB90
	93 - 77										
	93 - 79										
	93 - 81										
	93 - 84										
	93 - 93										
	94 -155										
	94 -163										
	94 -173										
	94 -184										
MS29512-8	93 - 39	7							R	5330-263-8031	GB90
	93 - 45										
	94 - 38										
	94 - 44										
	94 -168										
	94 -179										
	95										
	97										
	109 - 12										
	116 - 11										
MS29513	14	13							R	5330-599-0813	GB90
	15										
MS29513-10	10	1684							R	5330-599-2458	GB90
	13										
	14										
	15 -166										
	16										
	22										
	95 - 85										
	96 - 17										
	97 - 88										
	98 - 33										
	99 - 39										
MS29513-11	14	663							R	5330-248-3831	GB90
	15										
	16										
	22										
MS29513-111	116 - 40	1							R	5330-599-3060	GB90
MS29513-112	69 - 20	8							R	5330-248-3841	GB90
	109 - 7										
	113 - 18										
MS29513-116	109 - 6	2							R	5330-515-4788	GB90
MS29513-118		1									
MS29513-119	98 - 50	4							R	5330-250-0228	GB90
	98 - 51										
	99 - 58										
	99 - 56										
	338 - 13										
	338 - 14										
MS29513-12	14	53		M		0			R	5330-599-2741	GB90
	15										
	16										
	98 - 79										
	99 -112										
	100 -215										
	104 - 10	2									
	105 - 11										
	111 - 4										
	116 - 54										
MS29513-124	98 - 10	3							R	5330-528-8512	GB90
	99 - 51										
MS29513-125	10	2							R	5330-527-8113	GB90
	99 - 9										
	100 - 10										
	100 -123										
	101 - 22										
	103 -153										
	109 - 2										
MS29513-128	100 -171	2							R	5330-640-9941	GB90
	107										
	108 - 11										
MS29513-13	93	12							R	5330-640-9939	GB90
	103 - 27										
	103 -102										
	119 - 41										
	338										
MS29513-134		2							R	5330-641-0119	GB90
MS29513-137	98 -104	3							R	5330-527-9552	GB90
	98 -108										

PART NUMBER	FIGURE AND INDEX	TOTAL QTY.	MICRO-FILM NUMBER	MAINTENANCE CODE DATA: SOURCE CODE	INSTL CAPABILITY	PRE-INSTL CAPABILITY	RECOVERABILITY	SUPPORT EQUIPMENT	FEDERAL STOCK NUMBER DATA: COGNIZANCE CODE	FEDERAL STOCK NUMBER	MFG. CODE (TSMC)
	99 - 14										
	99 -135										
	99 -138										
	100 - 30										
	100 -172										
	101 - 10										
	102 - 11										
	103 -163										
MS29513-139	100 - 32	1							R	5330-252-6052	GB90
	103 -158										
MS29513-14	14	257							R	5330-248-3840	GB90
	15										
	16										
	22										
	24										
MS29513-142	247	10							R	5330-599-2730	GB90
MS29513-144	98 - 99	6							R	5330-530-1933	GB90
	98 -118										
	99 -128										
	99 -148										
	100 -163										
	106 - 9										
MS29513-145	100 -108	2							R	5330-527-8522	GB90
	339 -118										
MS29513-148	110 - 18	1									
MS29513-149	247	2							R	5330-530-3504	GB90
MS29513-15	94 -125	2							R	5330-248-3845	GB90
	94 -128										
	103 -161										
MS29513-155		1									
MS29513-16	16	5							R	5330-248-3845	GB90
MS29513-20	102 - 99	1							R	5330-291-3274	GB90
	102 -126										
	103 - 87										
	103 -134										
MS29513-210	338 - 27	8							R	5330-250-0221	GB90
	338 - 38										
	339 - 71										
MS29513-214	98 - 46	8							R	5330-527-8536	GB90
	116 - 1										
	338 - 15										
	339 - 25										
	339 -121										
MS29513-215	107 - 28	1							R	5330-530-1929	GB90
MS29513-216	113 - 59	3							R	5330-298-0339	GB90
	358										
MS29513-218	95 -172	24							R	5330-265-1075	GB90
	96										
	97 -174										
	97 -186										
	98										
	99										
	100 - 92										
	101 - 65										
	102 -139										
	103 -114										
	104 - 14	1									
	104 - 41	1									
MS29513-219	105 - 17	2							P	5330-298-9974	Z150
	349 - 85	1									
MS29513-22		2							R	5330-531-4639	GB90
	111 - 20	2									
MS29513-222	93 - 18	9							R	5330-599-2766	GB90
	94 - 11										
	95 - 16										
	95 - 99										
	95 -181										
	96 - 38										
	97 - 11										
	97 - 83										
	97 -179										
	97 -196										
	349 - 63	2									
MS29513-223	338 - 42	2							R	5330-599-2537	GB90
	339 - 26										
MS29513-224	334 - 54	1									
	339 -120	2							R	5300-599-2426	GB90
MS29513-225	95	2							R	5330-531-4847	GB90
	98 - 49										
	99 - 54										
MS29513-226	99 - 73	2							P	5330-263-5173	GB90
	100 - 89										
	100 -153										
	102 - 62										
	103 -171										
	104 - 43	1									
	105 - 52										
MS29513-227	100	2							R	5330-527-8115	GB90
	101 - 42										
	103 -175										
MS29513-228	93	7							R	5330-291-7537	GB90
	94										
	95										
	97										
	100 -120										
	104 - 23	1									
	104 - 37	1									
	105 - 52										
	105 - 46										
	110 - 11										
	112 - 17										
MS29513-229	101	5							R	5330-292-7591	
	102										
	104 - 30	1									
	105 - 39										

PART NUMBER	FIGURE AND INDEX	TOTAL QTY.	MICRO-FILM NUMBER	MAINTENANCE CODE DATA: SOURCE CODE	INSTL CAPABILITY	PRE-INSTL CAPABILITY	RECOVERABILITY	SUPPORT EQUIPMENT	FEDERAL STOCK NUMBER DATA: COGNIZANCE CODE	FEDERAL STOCK NUMBER	MFG. CODE (TSMC)
	107 - 14										
	107 - 27										
	108 - 21										
	121 - 21										
	121 - 30										
	121 - 40										
MS29513-23		6									
MS29513-231	93 - 19	17							R	5330-291-3073	GB90
	94 - 12										
	95 - 17										
	95 -135										
	95 -155										
	96 - 50										
	97 - 12										
	97 -136										
	97 -151										
	103 -145										
MS29513-232	97 -191	2							R	5330-297-6311	GB90
	100 -124										
	247										
	334 - 55										
	349 - 91	1									
MS29513-234	98 - 39	7							R	5330-251-9367	GB90
	99 - 44										
	100 -128										
	101 - 93										
	102 - 71										
	103 - 89										
	112 - 13										
	121 - 20										
	247										
MS29513-236	121 - 27	1							R	5330-291-3069	GB90
MS29513-237	95 - 91	8							R	5330-291-3078	GB90
	96 - 24										
	97 - 94										
	98 - 45										
	98 - 66										
	99 - 50										
	99 - 91										
	100 -194										
	103 - 76										
	103 -123										
	110 - 14										
MS29513-238	100 -131	3							R	5330-298-4944	GB90
	101 - 96										
	102 - 76										
	103 - 92										
MS29513-240	95	5							R	5330-297-9790	GB90
	97										
	99 - 66										
	100 - 74										
	100 -142										
	101 - 79										
	102 - 55										
	103 - 37										
MS29513-243	95 - 98	5							R	5330-265-8015	GB90
	96 - 33										
	96 - 34										
	97 -101										
	98										
	99										
	100										
	102 - 98										
	103 - 86										
	103 -103										
	103 -133										
	113 - 29										
MS29513-244	99 - 72	5							R	5330-292-7564	GB90
	100 - 88										
	100 -152										
	101 - 85										
	102 - 61										
	103 - 43										
MS29513-250	10	2							R	5330-291-3085	GB90
	99 - 2										
	100 - 3										
	101 - 4										
	102 - 2										
	103 -148										
MS29513-252	98 - 71	7							R	5330-527-8116	GB90
	99 -103										
	100 -207										
	104 - 4	2									
	105 - 5										
	358										
MS29513-253	96 - 56	3									
	102 -155										
	103 - 60										
	358										
MS29513-26		2							R	5330-265-1091	GB90
	113 - 22	2									
MS29513-261	247	2							R	5330-291-3275	
	358										
MS29513-263	111	1							R	5330-531-2924	GB90
MS29513-266	101 - 86	1									
MS29513-28	98	4							R	5330-527-8532	GB90
	99										
	105										
	249										
	358										
MS29513-325	93	16							R	5330-265-1096	GB90
	94										
	95 -156										
	95 -189										
	97 -157										

PART NUMBER	FIGURE AND INDEX	TOTAL QTY.	MICRO-FILM NUMBER	MAINTENANCE CODE DATA: SOURCE CODE	INSTL CAPABILITY	PRE-INSTL CAPABILITY	RECOVERABILITY	SUPPORT EQUIPMENT	FEDERAL STOCK NUMBER DATA: COGNIZANCE CODE	FEDERAL STOCK NUMBER	MFG. CODE (TSMC)
	97 -164										
	97 -171										
	112 - 14										
	112 - 45										
	349 - 61	2									
	349 - 90	1									
MS29513-327	112 - 52	8							R	5330-291-7341	GB90
MS29513-329	95 -142	14							R	5330-291-7335	GB90
	96										
	97 -144										
	100 - 95										
	100 -134										
	101 - 46										
	101 - 99										
	102 - 23										
	102 - 74										
	103 - 95										
	334 - 60										
MS29513-333	95 -106	17							R	5330-291-3082	GB90
	95 -114										
	95 -121										
	97 -108										
	97 -116										
	97 -123										
	358										
MS29513-336	103 - 44	1									
MS29513-350	101 - 4	1									
MS29513-352		1									
MS29513-4		1							R	5330-641-4354	GB90
MS29513-8	PG. 1014	2							R	5330-599-2749	GB90
	PG. 1023										
MS29514-1	110 - 21	1							R	2915-333-7970	Y120
MS29515-144		1									
MS29519-1	108 - 2	1							R	2915-569-4912	Y120
	110 - 25	1							R	2915-141-9445	Y120
MS29521-12		1							R	2915-523-6633	Y120
MS29521-20	93	2							R	2915-098-3535	Y120
	94										
	95										
	97										
	108 - 3										
MS29521-24	93 - 20	6							R	2915-098-3536	Y120
	94 - 13										
	95 - 18										
	95 -150										
	96 - 30										
	97 - 13										
	97 -148										
	102 - 94										
	102 -121										
	103 - 82										
MS29521-32	110 - 2	3							R	2915-098-3537	Y120
	112 - 27										
MS29523-14	15	6									
MS29524-1	110 - 24	2							R	5330-599-4450	Y120
MS29526-1	110 - 20	1							R	1600-C02-1376	Y120
MS29613-10		14									
MS29613-226	101 - 36	2									
MS3102A-24-28P	334	1									
MS3103H-16-95	287A- 36	1									
MS3103H-20-29P	284A- 3	1									
MS3103H-28-21P	284A- 7	2									
	287A- 42										
MS3103H-32-6P	287A- 46	1									
MS3103H-36-7S	287A- 50	1									
MS35043-80	210	1									
MS35214-27	284A- 28	3									
MS35333-80	286A- 16	3									
MS35337-44	269	4									
	269	4									
MS35337-49	362A	4									
MS35337-83	330 - 21	1									
MS51916D6-4		1									
MS90079-2-1	285A- 33	6									
	285A- 34										
	285A- 42										
	285A- 49										
	285A- 50										
	286A- 6										
	287A- 1										
MS90079-26-1	285A- 35	3									
	285A- 36										
	285A- 56										
	287A- 6										
MS90079-3-1	285A- 43	4									
	285A- 44										
	285A- 51										
	287A- 2										
MS90079-7-1	285A- 3	7									
	285A- 41										
	285A- 45										
	285A- 47										
	285A- 52										
	287A- 3										
MS90079-8-1	285A- 39	5									
	285A- 46										
	285A- 48										
	285A- 53										
	287A- 4										
MS90079-9-1	285A- 5	3									
	285A- 40										
	285A- 55										
	287A- 5										
MS91418-2BC5	269 - 22	2									
MS91418-2BF5	269 - 21	2									

PART NUMBER	FIGURE AND INDEX	TOTAL QTY.	MICRO-FILM NUMBER	MAINTENANCE CODE DATA: SOURCE CODE	INSTL CAPABILITY	PRE-INSTL CAPABILITY	RECOVERABILITY	SUPPORT EQUIPMENT	FEDERAL STOCK NUMBER DATA: COGNIZANCE CODE	FEDERAL STOCK NUMBER	MFG. CODE (TSMC)
MS92512-5	100 -201	1									
MS92513-13	116 - 23	4									
MT-1042/ARA-25	209 - 33	1							R	5821-563-1461	FANN
	209 - 35										
MT-1043/ARA-25	209	1							R	5800-C03-2441	FANN
MT-1054-2		1		M		0					
MT-1063/APA-89		1							R	5840-305-2255	FANN
MT-362A/A	122	1							R	5800-C03-2504	FANN
	212										
MT-827A/ARN-14	210	1							R	5826-338-6752	FANN
MT-707/APG-30	213	1							R	1270-224-6938	E313
MT-708/APG-30	213 - 27	1							R	5800-C02-6799	E313
MT-739/U	213 - 24	1							R	5841-513-3512	E313
MT-928/ARN-21	211	1							R	5800-C03-2568	FANN
MT-962/ARN-14	210	1							R	5826-338-6707	FANN
MT707/APG-30		1							R	1270-224-6938	E313
MT708/APG-30		1							R	5840-513-3493	E313
MT739/U		1							R	5841-513-3512	E313
MT822A/ARC-27	209	1							R	5821-355-9210	FANN
M1		1									
M1A1	63 - 26	1									
	63 - 28										
M101A11-40506070		1		P1	F	0	R		R	6610-601-0324	VAJN
M200	63 - 19	2		P1	F	0	S		R	1650-204-1821	Y120
M34-14	75 - 47	2		M		0			R	3120-517-9181	G750
	350										
M48P3101A28		1							R	5935-575-9353	D336
M48S-3106A-28		1									
M48S-3106A28		1									
M6		2							R	5340-597-0949	GM80
M-3603	271 - 37	1									
NAF1029-2		1									
NAF1077-3	234 - 65	1							R	5935-259-5630	D336
	235 - 64										
NAF1201-8		1							R	1680-267-1109	GF50
NAF1201-9	55 - 18	1							R	1680-267-1107	GF50
NAF312506-1	62 - 15	2									
NAF312508-2	62 - 18	1									
NAF312508-3	62 - 1	4									
NAF312516-1	62	3									
NAF400309-1	62 - 13	1									
NAF502535-1		1									
NAF502536		1									
NAF502536-1		1									
NAF502537		1									
NAF502537-2		1									
NAF602200-1	62 - 12	1							R	1680-203-8996	X110
NAF602200-9	62 - 16	1									
NAF604324		1									
NAF604324-1		1							R	1600-C04-6733	X110
NAF606148-1		1									
NAS-43DD-3-84		4									
NAS1203-3	347	6									
NAS143-10	32 - 6	2							R	5310-149-9126	G192
NAS143-10C	32 - 7	2							R	5310-149-9118	G192
NAS143-12	70 - 2	8							R	5310-149-9125	G192
	70 - 4										
	358										
NAS143-12C	89	4							R	5310-149-9119	G192
	358										
NAS143-14C	85 - 2	1							R	5310-149-9120	G192
NAS143-4C	69 - 18	4							R	5310-149-9144	G192
	78 - 10										
NAS143-5	32 - 3	10							R	5310-149-9131	G192
	43 - 23										
	72 - 24										
NAS143-5C	32 - 2	14							R	5310-149-9145	G192
	72 - 23										
	76 - 29										
	83 - 86										
NAS143-6	32 - 11	6							R	5310-149-9130	G192
	50										
	70 - 6										
	358										
NAS143-6C	50	10							R	5310-149-9146	G192
	70 - 8										
	91										
	358										
NAS143-7	83 - 89	4							R	5310-149-9129	G192
NAS143-7C	29 - 2	5							R	5310-149-9147	G192
	29 - 26										
NAS144-15	16 -130	6									
NAS144-18	78 - 11	4									
NAS144-23	43 - 11	2									
	48 - 22										
NAS144-24	43 - 15	2									
	48 - 23										
NAS144-25	43 - 16	2									
	48 - 24										
NAS144-26	43 - 17	2									
	48 - 25										
NAS144-27	43 - 18	2									
	48 - 26										
NAS144-28	43 - 19	2									
	48 - 27										
NAS144-29	43 - 20	2									
	48 - 28										
NAS144-30	48 - 29	1									
NAS144-31	48 - 30	1									
NAS144-34	34 - 20	2									
NAS144DH11	131 - 56	2									
NAS145-16	16 -105	4									
NAS145-18	16 - 94	6							R	5306-207-4106	G190
NAS145-20	16 -102	4							R	5306-292-8720	G1AN
NAS145-21A		2									

PART NUMBER	FIGURE AND INDEX	TOTAL QTY.	MICRO-FILM NUMBER	MAINTENANCE CODE DATA: SOURCE CODE	INSTL CAPABILITY	PRE-INSTL CAPABILITY	RECOVERABILITY	SUPPORT EQUIPMENT	FEDERAL STOCK NUMBER DATA: COGNIZANCE CODE	FEDERAL STOCK NUMBER	MFG. CODE (TSMC)
NAS145-24	16 - 91	3									
NAS145-25	76 - 28	4									
NAS145-25C	83 - 87	2									
NAS145-26	32 - 1	4							R	5306-269-6939	G190
NAS145-30		2									
NAS145-31	12 - 14	1									
NAS145DH20	121 - 6	3									
NAS146-20	16 - 13	4									
NAS146-21		1									
NAS146-24	16 - 14	3									
	16 - 15										
NAS146-26	32 - 9	8									
	50 - 44										
	116 - 51										
NAS146-41	64 - 19	1									
NAS146-49	64	1									
NAS146-50	64 - 77	1									
NAS146-66	91 - 28	1									
NAS146-77	91 - 27	3									
	91 - 58										
NAS146-80	91	1									
NAS146DH17		2									
NAS147-34	116 - 20	8							P	5306-292-8736	G1AN
NAS147DH19	116 - 39	4									
	119 - 40										
NAS147DH21		1									
NAS150-34	32 - 8	2									
NAS152-59		1									
NAS152-75		1									
NAS154DH68	85 - 1	1									
NAS178-12-7		1							R	5320-235-0351	G191
NAS178-6-3	358	8							R	5320-245-4185	G191
NAS178-6-4	358	12							R	5320-245-4186	G191
NAS178-6-5	358	2									
NAS179-10		20							R	5306-223-6095	G192
NAS179-6	118	20							R	5320-223-6093	G192
	358										
NAS179-8	118	38							R	5320-223-6094	G192
	347 - 16	4									
	348 - 21										
NAS182-24A		2									
NAS211-10		1									
NAS211-8	39	1									
NAS220-11	198 -148	4									
NAS220-15	13 - 34	4							R	5305-271-8690	G192
	13 - 46										
NAS220-9	341 - 40	6							R	5305-271-8692	G192
	341 - 41										
	341 - 42										
	PG. 1004										
NAS221-10	18 - 96	79							R	5305-149-9859	G192
	35 - 4										
	35 - 5										
	35 - 7										
	35 - 8										
	35 - 15										
	35 - 16										
	35 - 17										
	35 - 20										
	35 - 25										
	35 - 29	1									
	171 - 9	3									
	195	1									
NAS221-11	18 - 31	128							R	5905-165-5359	G192
	35 - 6										
	35 - 14										
	35 - 27										
	44 -132										
	71 - 3										
	80 - 10										
	116 - 60										
	118 - 21										
	118 - 40										
NAS221-12	197 - 47	9							R	5305-149-9896	G192
	198 - 42										
NAS221-13	43	18							R	5305-271-3506	G192
	92 - 39										
	195										
	203 - 24										
NAS221-15	10 - 48	1									
	92 - 40	8							R	5305-149-9898	G192
	116 - 85										
	359 - 12										
NAS221-16	355 -209	1							R	5305-149-9899	G192
	PG. 1018										
	PG. 1024										
NAS221-18	116 - 86	8							R	5305-149-9900	G192
	195										
	197 - 80										
	200 - 10										
NAS221-19	42 - 36	4							R	5305-275-1564	G192
NAS221-20	116 - 87	2							R	5305-271-7717	G192
NAS221-23	116 - 88	2							R	5305-271-7714	G192
NAS221-25		4									
NAS221-27	61 - 5	4							R	5305-271-3518	GU92
NAS221-38	197 - 76	1							R	5305-271-3512	G192
NAS221-4	44	1									
NAS221-6	46 - 40	1							R	5305-271-3516	GU92
NAS221-7	43	5									
NAS221-8	39 - 90	10									
	95										
	97										
	358										
NAS221-9	18 - 28	32							R	5305-194-9858	G192
	35 - 9										
	35 - 10										
	35 - 13										
	35 - 26										
	42 - 6										
	42 - 31										
	44 -135										
	87 - 19										
	89										
NAS222-11	335 - 33	3									
NAS222-14	58 -137	1									
NAS222-19	78 - 41	2									
	198 -138										
NAS222-20	51 - 41	4							R	5305-275-1564	G192
	52 - 45										
NAS222-22		2							R	5305-165-6957	G192
NAS222-8	87 - 16	3							R	5305-271-7715	G192
NAS223-15	119 - 26	4									
NAS223-2		4									
NAS223-22	119 - 27	4							R	5305-264-2195	G192
NAS224-10		2									
NAS224-44		1							R	5305-207-1166	G192
NAS225-16	116 - 41	2									
NAS225-18		1									
NAS2647-048		1									
NAS264B-048		10									
NAS333PA6	20 - 5	4									
NAS333P7	19 - 57	6									
NAS333CP-6		1							R	5305-527-4519	G190
NAS333CPA6	16 - 24	6									
NAS333CPA7		8							R	5305-531-0432	G190
NAS333CP5		3									
NAS333CP6	33	22							R	5305-527-4519	G192
NAS333PA4		3							R	5306-207-8739	G190
NAS333PA5	20 - 3	4									
	20 - 6	4									
NAS333PA6	20 - 2	4									
NAS333P13	195 - 62	2							R	5305-141-2608	G190
NAS334-CPA-10		1									
NAS334-16	174 - 30	2									
NAS334-17	174 - 47	2									
NAS334-44A	186 - 26	2									
NAS334-7	174 - 39	2							R	5305-149-9943	G190
NAS334A36	174 - 33	4									
NAS334CPA-7		13							R	5305-527-4520	G190
NAS334CPA10	6 - 36	22							R	5305-527-4570	G190
	6 - 43										
	7 - 28										
	7 - 37										
	18 -112										
	173 - 34										
	176 - 5										
	189 - 87										
	357										
NAS334CPA10-5	6 - 30	16							R	5305-530-9511	G190
	7 - 17										
	7 - 39										
	17 - 19										
NAS334CPA11	6 - 19	4							R	5305-531-0438	G190
	6 - 40										
	6 - 41										
	7 - 16										
	7 - 36										
	16 -134										
	17 - 2										
	17 - 4										
	173 - 27										
	175 - 45										
NAS334CPA11-5	17 - 16	22							R	5305-530-9512	G190
	17 - 36										
	17 - 39										
NAS334CPA12	7 - 19	8							R	5305-531-0439	G190
	7 - 34										
	17 - 40										
	171 - 31										
	171 - 65										
	175 - 21										
	175 - 43										
	175 - 70										
	357										
NAS334CPA13	7 - 35	1							R	5305-531-0440	G190
	176 - 16										
NAS334CPA13-5	7 - 20	1							R	5305-531-0441	G190
	189 - 47										
NAS334CPA14	7 - 26	4							R	5305-527-4566	G190
NAS334CPA14-5	17 - 37	2									
NAS334CPA17		2							R	5305-531-0444	G190
NAS334CPA21	89 - 37	4									
	155 - 24										
NAS334CPA24	175 - 87	1							R	5305-530-9509	G190
NAS334CPA30	176 - 6	1							R	5305-530-9509	G190
NAS334CPA31	182	2									
	183										
NAS334CPA5-5		4							R	5305-530-9507	G190
NAS334CPA6-5	18 -108	26							R	5305-527-4243	G190
	18 -109										
	18 -110										
	18 -111										
	357										
NAS334CPA7	10 - 70	238							R	5305-527-4520	G190
	16 -105										
	16 -121										
	18 -127										
NAS334CPA7-5	6 - 31	35							R	5305-527-4567	G190
	7 - 18										
	7 - 38										

PART NUMBER	FIGURE AND INDEX	TOTAL QTY.	MICRO-FILM NUMBER	MAINTENANCE CODE DATA: SOURCE CODE	INST'L CAPABILITY	PRE-INST'L CAPABILITY	RECOVERABILITY	SUPPORT EQUIPMENT	FEDERAL STOCK NUMBER DATA: COGNIZANCE CODE	FEDERAL STOCK NUMBER	MFG. CODE (TSMC)
	13 - 5										
	18 -124										
	173 - 21										
	173 - 24										
	195										
	292 - 15										
	357										
NAS334CP17	138 - 5	1									
NAS334CP21	138 - 7	1									
NAS334PA12	182 - 46	4							R	5305-282-9826	G190
NAS334PA13	12 - 88	6							R	5305-282-3615	G190
	174 - 18										
	180 -171										
	183 - 28										
	205 - 24										
	259 -1P2										
NAS334PA14	205 -103	2									
NAS334PA16	188 - 59	3							R	5305-527-4960	G192
	189 - 33										
	358										
NAS334PA20	174 - 2	2							R	5305-530-9508	G192
	182 - 27										
	358										
NAS334PA21		4									
NAS334PA24	92 - 12	12							R	5305-530-9509	G192
	128 - 91										
	128 - 98										
	182 - 24										
	183 - 25										
	358										
NAS334PA27	128 - 99	2									
NAS334PA30	186 - 34	2							R	5305-530-9506	G190
NAS334PA31	182 - 19	1							R	5305-530-9510	G190
	183 - 20										
	358										
NAS334P10	54 - 26	2							R	K305-531-0035	G190
NAS334P12	182	1									
	183										
NAS334P412	183 - 47	2									
NAS335A16	180 - 47	1									
NAS335A6	61 - 52	10									
	61 - 74										
	61 - 97										
NAS335A7	61 - 96	4									
NAS335CPA-7	18 -107	1									
NAS335CPA10	357	2									
NAS335CPA11-5	6 - 38	15									
NAS335CPA12-5	7 - 23	1									
NAS335CPA13	6 - 39	3									
	7 - 31										
NAS335CPA13-5	7 - 33	1									
NAS335CPA14	7 - 22	4									
	7 - 30										
	7 - 32										
	173 - 37										
NAS335CPA14-5	7 - 21	1									
NAS335CPA16	7 - 25	12									
	173 - 38										
NAS335CPA20	7 - 24	12									
NAS335CPA24		1									
NAS335CPA6		48									
NAS335CPA6-5		1									
NAS335CPA7	18 -129	4									
	21 - 83										
	21 -104										
	357										
NAS335CPA7-5	6 - 37	8									
NAS335PA16	45 - 18	16									
NAS335PA20	180 - 20	1									
NAS335PA25		2									
NAS335PA6		48							R	5306-207-8738	G190
NAS336CPA10-5	6 - 28	1									
	7 - 41										
NAS336CPA20	89 - 41	2									
NAS336CPA26	117 - 31	3									
NAS336CPA27	175 - 82	1									
NAS336PA20		2									
NAS336PA25		8									
NAS35CPA7		6									
NAS36CPA37	23 - 52	1									
NAS42-3-24	197	1									
	198										
NAS42-5-10	PG. 1006	1									
NAS42C5-8	65 - 39	1									
NAS42C6-18	54 - 6	4									
NAS42C8-4	209 - 8	4									
NAS42C8-7	209 - 11	4									
NAS420D3-28	200	2									
	201 - 13										
NAS42DD4-16	86	1									
NAS42DD4-24	197 - 51	2									
	198 - 46										
NAS42DD4-28	89 - 38	3									
	197										
	198										
	203										
NAS42DD4-40	86	2									
NAS42DD4-56	47 - 26	1									
NAS42DD4-57		2									
NAS42DD4-6	53 - 60	1									
NAS42DD4-72A	47 - 24	1									
NAS42DD4-76	201 - 4	1									
NAS42DD4-80	41 - 2	4									
NAS42DD457	203	2									
NAS42DD5-12	PG. 1004	1									
NAS42DD5-20	PG. 1004	1									
NAS42DD5-40	203	1									
NAS42DD5-96	187 - 22	2									
NAS42DD6-12	PG. 1005										
	117 - 32	8									
NAS42DD6-20	41 - 46	12									
NAS42DD6-36	200	2									
NAS42DD8-56	181	4									
	184										
	185										
NAS42DD8-64	180 - 70	1									
NAS42HT4-21	PG. 1011	1									
NAS420D-4-28		1									
NAS427K10	197 - 15	2							R	5315-282-0287	GH80
	197 - 73										
	200										
NAS427K11	197	4							R	5315-597-1525	GH80
	200										
	201 - 14										
NAS427K13	197 - 64	1									
NAS427K14	200 -101	1							R	5315-282-0296	GH80
NAS427K15	198 -100	2									
NAS427K16	195	2							R	5315-597-1504	GH80
	198 - 70										
	204 - 35										
NAS427K17	197	2							R	5315-597-1642	GH80
	198										
	204 - 26										
	204 - 31										
NAS427K18	197 - 11	2									
	197 - 57										
	198 - 10										
	198 - 52										
	198 - 59										
NAS427K21	197 - 40	3							R	5315-597-0633	GH80
	198 - 35										
	201 - 24										
	204 - 36										
NAS427K23	203	1							R	5315-597-1579	GH80
NAS427K25	195	2							R	5315-598-4709	GH80
NAS427K30	198 - 71	2									
NAS427K31	195	2							R	5315-598-4633	GH80
	197 - 74										
NAS427K34	195	2							R	5315-598-2803	GH80
NAS427K36	198 - 72	2									
	198 -102										
NAS427K44	200 - 85	1							R	5315-282-1531	GH80
NAS427K9	86 - 28	4							R	5315-597-1562	GH80
	86 - 37										
	86 - 41										
	86 - 50										
	86 - 54										
	195										
	197 - 22										
	198 - 17										
	198 - 93										
NAS427T10	184	1							R	5315-597-1587	GH80
	185										
	197 - 44										
	198 - 39										
	200 - 86										
NAS427T14	180 - 92	2							R	5315-597-2253	GH80
NAS427T18		4							R	5315-597-0837	GH80
NAS427T7	195	2							R	5315-514-0443	GH80
NAS427T9		8							R	5315-597-1529	GH80
NAS427W17	195	1									
NAS428-3-10	65 - 66	2									
NAS428-3-11	65 - 68	1									
NAS428-3-13		2							R	5306-286-1337	G190
NAS428-3-6	51 - 35	2							R	5306-286-1341	G190
NAS428-3-7	18	5							R	5306-286-1340	G190
NAS428-4-10	19 - 20	1							R	5306-286-1361	G190
NAS428-4-11	191 - 79	2							R	5306-286-1360	G190
	192 - 58										
NAS428-4-12	18 - 49	11							R	5306-286-1359	G190
	171 - 27										
	171 - 45										
	171 - 62										
	171 - 81										
	171 - 96										
	335A- 22										
	357										
NAS428-4-14	18 - 89	1							R	5306-286-1357	G190
NAS428-5-10	78 - 56	1							R	5306-288-1351	G190
NAS428H-14	180 - 24	2									
NAS428H4-11	184 - 24	1									
	185 - 23										
NAS428H4-12		1							R	5306-286-3319	G190
NAS428H4-14	181 - 9	2							R	5300-C00-0340	GIAN
NAS428H4-5	80 - 50	1							R	5306-207-4589	G190
NAS428H4-6	16 - 26	2							R	5306-207-4594	G190
	169 - 22										
NAS428H4-7	131 - 44	3							R	5306-207-4907	G190
	191 - 1										
NAS428H5-11	66 - 22	3							R	5306-286-2516	G190
	92 - 7										
NAS428H5-7	151 - 12	2							R	5306-315-7519	G190
NAS428KH4-10	128 - 96	6									
	138 - 45										
	155 - 12										
	182 -107										
	183 -105										
	205 - 59										
	358										
NAS428KH4-12	182 - 95	1									

PART NUMBER	FIGURE AND INDEX	TOTAL QTY.	MICRO-FILM NUMBER	MAINTENANCE CODE DATA: SOURCE CODE	INSTL CAPABILITY	REINSTL CAPABILITY	RECOVERABILITY	SUPPORT EQUIPMENT	FEDERAL STOCK NUMBER DATA: COGNIZANCE CODE	FEDERAL STOCK NUMBER	MFG. CODE (TSMC)
	183 - 93										
NAS428K3-10	38 - 21	2							R	5306-286-3297	G190
NAS43-1-18	284 - 14	4									
NAS43-3-24	284 - 13	4									
NAS43-3-10	74 - 48	2									
	74 - 50	2									
NAS43-3-20		2									
NAS43-3-21	17 - 28	2									
NAS43-3-24	45 - 81	2									
NAS43-3-26	18	1									
	357										
NAS43-3-30	333 - 66	1									
NAS43-3-32	17 - 29	2									
	260 - 27										
NAS43-3-34		2									
NAS43-3-40	358	1									
NAS43-3-48	358	3									
NAS43-3-6	42 - 91	4									
NAS43-3-8	260 - 26	2									
NAS43-4-104	200	1									
NAS43-4-12	334 - 50	3									
NAS43-4-192	PG. 1006	1									
NAS43-4-20	363 - 46	2									
	363 - 74										
NAS43-4-28	204 - 59	1									
	PG. 1014										
NAS43-4-32	PG. 1023	1									
NAS43-4-34	365 - 21	1									
NAS43-4-35	363 - 40	2									
	363 - 68										
NAS43-4-39	69 - 8	2									
NAS43-4-39S	43	1									
NAS43-4-63	193	2									
NAS43-4-68	196	1									
NAS43-4-80		2									
NAS43-4-9	48 - 70	2									
NAS43-5-28	42 - 54	4									
NAS43-6-40	360 - 35	1									
NAS43-6DD128	365	4									
NAS43-8-10	362 - 36	4									
NAS43-8-142	362A- 15	4									
NAS43-8-156	364 - 13	9									
	364 - 33										
NAS43-8-40	367A	2									
NAS43C12-128	83 - 41	1									
NAS43C3-31	35 - 39	4									
NAS43C3-56	34 - 12	2									
	35 - 40										
NAS43C3-64	66 - 31	1									
NAS43C3-82		2									
NAS43C3-96	187 - 8	2									
NAS43C4-24	186 - 39	2									
NAS43C4-35A	PG. 1007	1									
NAS43C4-82	34 - 19	2									
NAS43C4-88	41 - 66	2									
NAS43C5-14	41 - 53	12									
NAS43C5-28	35	4									
NAS43C6-29	34 - 17	4									
NAS43DD-1-32		1									
NAS43DD-3-12		1							R	5340-203-8967	G192
NAS43DD-3-16		1									
NAS43DD-3-20		1									
NAS43DD-3-8		3									
NAS43DD-3-88	210 - 50	3									
NAS43DD1-109	189 - 68	1									
NAS43DD1-12	177	1									
NAS43DD1-128	53 - 26	1									
NAS43DD1-133	53 - 31	2									
NAS43DD1-18	287 - 58	7									
NAS43DD1-20	84 - 92	2									
NAS43DD1-24	287 - 57	2									
NAS43DD1-29	189 - 72	1									
NAS43DD1-66	350 - 70	1									
NAS43DD10-8	355 -152	2									
	PG. 1014										
	PG. 1023										
NAS43DD12A		4									
NAS43DD3-10	164	4									
	165										
	357										
NAS43DD3-12A	213	7									
NAS43DD3-140	311 - 12	4									
	311 - 43										
	312 - 11										
NAS43DD3-16	44	3		M			O				
	93										
	141										
	259 -175										
	295										
	355										
	357										
	358										
	PG. 1014										
	PG. 1018										
	PG. 1023										
NAS43DD3-18		2									
NAS43DD3-184	55 - 38	2									
	57 - 60										
	57A- 22										
NAS43DD3-20	225 - 21	2									
	225 - 32										
	357										
NAS43DD3-21	311 - 2	8									
NAS43DD3-22	213	2									
	338 - 57										
	339 - 96										
NAS43DD3-24	225 - 38	1									
	355										
	357										
NAS43DD3-26	94 - 43	3									
	339 -105										
NAS43DD3-28	332	2									
	338 - 58										
	339 -106										
	357										
NAS43DD3-31	195	2									
NAS43DD3-32	93	7									
	355										
	PG. 1018										
	PG. 1023										
NAS43DD3-34	234 - 35	2									
	235 - 35										
NAS43DD3-36	203	1									
NAS43DD3-40	358	1									
NAS43DD3-42	78 - 74	4									
NAS43DD3-48	93	2									
	259 - 94										
	358										
NAS43DD3-56	225 - 14	3									
	332										
NAS43DD3-6A	213	2									
NAS43DD3-64	53 - 66	4									
	358										
NAS43DD3-68	338 - 61	1									
	339 -104										
NAS43DD3-72		1							R	4710-279-0426	G240
NAS43DD3-74	338 - 59	1									
	338 - 60										
	339 - 97										
NAS43DD3-76	270 - 98	2							R	5340-203-8968	G192
NAS43DD3-78		2									
NAS43DD3-84	34 - 27	2									
NAS43DD3-9	93 -133	2									
NAS43DD3D		2									
NAS43DD4-12	68 - 36	2									
NAS43DD4-20	123	2									
	125										
NAS43DD4-22	197 - 62	1									
	198 - 57										
NAS43DD4-24	50 - 28	1									
NAS43DD4-30	113 - 48	2									
	358										
NAS43DD4-32	124	6									
	126										
	127										
	274 - 21										
NAS43DD4-36	195	1									
NAS43DD4-48	351	1									
NAS43DD4-52	225 - 24	1									
	225 - 56										
NAS43DD4-84	52 - 51	2									
NAS43DD5-122	12	4									
NAS43DD5-50	362	1									
NAS43DD5-58	362	1									
NAS43DD6-12	225 - 20	1									
	225 - 51										
NAS43DD6-18	41 - 64	4									
NAS43DD6-57	41 - 49	3									
NAS46-4-36	176 - 27	1									
NAS46P4-21		1									
NAS463B-DD10	10	28		M			O		R	5310-638-6583	G192
	87										
	88										
NAS463C-DD10	10	2									
NAS463D-DD10	89	1									
NAS463F-DD10	10	14							R	5310-595-9702	G192
NAS463F-DD416		1							R	5310-522-0441	G192
NAS463FDD616		1							R	5310-638-6588	G192
NAS463T-DD10	10	2									
	88	2							R	5310-638-6577	G192
NAS463T-DD416	16	10									
NAS463W-DD10	88	4		M			O		R	5310-595-9695	G192
	91										
NAS463X-DD416H	345A- 31	4									
NAS463XDD10	347	9									
NAS463Y-DD416	21	4									
NAS464-P4A9	21 -119	1									
	21 -120										
NAS464-10A39		1									
NAS464-10A41	84 - 87	1									
NAS464-14-35		2							R	5306-639-2511	G190
NAS464-14-37		4									
NAS464-14-39		5							R	5306-639-2512	G190
NAS464-14-41		1									
NAS464-14-43		8							R	5306-639-2522	G190
NAS464-14-47		6									
NAS464-14-53		2							R	5306-639-2500	G190
NAS464-14-55		2							R	5306-639-2773	G190
NAS464-14-65		4							R	5306-292-5128	G190
NAS464-16-40	2 - 17	1									
NAS464-16A62	113 - 19	2									
NAS464-3-11	75 - 52	2							R	5306-293-0562	G190
NAS464-3-12	190 - 33	1							R	5306-283-0561	G190
NAS464-3-14	75 - 65	1							R	5306-283-0590	G190
NAS464-3-17	75 - 42	1							R	5306-639-2496	G190
NAS464-3-7	182 - 57	1							R	5306-292-5165	G190
	358										
NAS464-3A14	190 - 19	1							R	5306-283-0513	G190
NAS464-3A16	190 - 10	1							R	5306-283-0543	G190
NAS464-3A9	190 - 3	1							R	5306-287-1001	G190

PART NUMBER	FIGURE AND INDEX	TOTAL QTY.	MICRO-FILM NUMBER	MAINTENANCE CODE DATA: SOURCE CODE	INSTL CAPABILITY	PRE-INSTL CAPABILITY	RECOVERABILITY	SUPPORT EQUIPMENT	FEDERAL STOCK NUMBER DATA: COGNIZANCE CODE	FEDERAL STOCK NUMBER	MFG. CODE (TSMC)
NAS464-4-12	190 - 26										
	66 - 34	1							R	5306-207-0993	G190
	173										
NAS464-4-13	172 - 8	1									
	172 - 80	1									
NAS464-4-15	182 -147	2							R	5305-263-3512	G190
	182 -157										
NAS464-4-16	172	1									
	172 - 5	1									
	173 - 10										
NAS464-4-19		1							R	5306-207-1057	G190
NAS464-4-22		2							R	5306-206-7900	G190
NAS464-4-23	205 -109	2							R	5306-515-9166	G190
NAS464-4-28	172	1									
NAS464-4-33	172 - 18	1									
NAS464-4-36		1							R	5306-207-1068	G190
NAS464-4-37	117 - 20	2							R	5306-207-1012	G190
NAS464-4-53		1							R	5306-207-1009	G190
NAS464-4A-32		2									
NAS464-4A11	178 - 16	12							R	5306-260-9693	G190
	178 - 19										
	178 - 20										
NAS464-4A12	131 - 54	2							R	5306-207-1018	G190
NAS464-4A13	173 - 6	4							R	5306-207-1006	G190
	174 - 54										
	174 - 69										
	174 - 83										
	180 -148										
NAS464-4A14	178 - 17	5							R	5306-260-9694	G190
	180 -156	1									
NAS464-4A15	174 - 65	6							R	5306-207-1004	G190
	180 -132										
NAS464-4A16	19 - 49	3							R	5306-260-9695	G190
NAS464-4A17	180 - 7	2							R	5306-207-1005	G190
	180 - 37										
NAS464-4A18	180 -157	1							R	5306-207-1002	G190
NAS464-4A19	19 - 25	4							R	5306-639-2498	G190
	19 - 56										
	19 - 85										
	155 - 7										
	180 - 4										
	180 - 40										
NAS464-4A20	66 - 38	1							R	5305-260-9698	G190
NAS464-4A22	174 - 70	1									
NAS464-4A25	180 -153	2							R	5306-207-1015	G190
NAS464-4A30	174 - 73	2							R	5305-285-3933	G190
	180 -135										
	180 -154										
NAS464-4A32	91 - 2	6							R	5305-285-3934	G190
NAS464-4A41	92 - 2	1							R	5305-283-0559	G190
NAS464-4A5	174 - 57	2									
	174 - 86										
	358										
NAS464-4A59	174 - 52	2							R	5305-284-0553	G190
NAS464-4A6		2							R	5305-283-0555	G190
NAS464-4A7	174 - 58	2									
	174 - 87										
NAS464-4A8		2							R	5305-260-9690	G190
NAS464-4LA20		1									
NAS464-5-10	164 - 55	4							R	5306-292-5098	G190
	165 - 63										
NAS464-5-11	117 - 9	1							R	5306-292-5176	G190
NAS464-5-15	182 -140	1							R	5306-141-4763	G190
NAS464-5-19	182 -117	3							R	5306-292-5172	G190
	182 -129										
NAS464-5-20	58 - 89	1							R	5306-260-9700	G190
NAS464-5-24	178 - 25	4							R	5306-292-8555	G190
NAS464-5-27	182 -185	1							R	5306-141-4765	G190
NAS464-5-9	182 -161	2							R	5306-269-6957	G190
	183 -162										
NAS464-5A10	64	2									
NAS464-5A11	90	12									
NAS464-5A12	13 - 51	5									
	64										
	90 - 8										
NAS464-5A19	19 - 3	1									
NAS464-5A21	47 - 70	2									
NAS464-5A30	13	1									
	195										
NAS464-5A39	78 - 15	2									
NAS464-5A7		2									
NAS464-5A8	89 - 26	4									
NAS464-5A9	89 - 23	4									
	89 - 24										
NAS464-6-11	24 - 23	5							R	5306-260-9702	G190
	24 - 54										
	24 - 85										
NAS464-6-18	183 -141	2							R	5306-260-9704	G190
NAS464-6-27	182 -133	1									
NAS464-6-29	119 - 42	4							R	5306-292-5119	G190
NAS464-6-39	182 -151	1							R	5305-263-3519	G190
NAS464-6A11	19 - 89	2									
NAS464-6A20		2									
NAS464-6A26	13	1									
NAS464-6A30	13	1									
	195										
NAS464-6A31	13	1									
NAS464-6A47	91 - 33	1									
NAS464-6A49	91 - 32	4									
NAS464-6A51	91 - 34	3									
NAS464-6A53	91 - 31	3									
NAS464-6A55	91 - 29	2									
NAS464-6A65	91 - 26	1									
NAS464-6A8	89 - 25	2									
NAS464-6A9		2									

PART NUMBER	FIGURE AND INDEX	TOTAL QTY.	MICRO-FILM NUMBER	MAINTENANCE CODE DATA: SOURCE CODE	INSTL CAPABILITY	PRE-INSTL CAPABILITY	RECOVERABILITY	SUPPORT EQUIPMENT	FEDERAL STOCK NUMBER DATA: COGNIZANCE CODE	FEDERAL STOCK NUMBER	MFG. CODE (TSMC)
NAS464-7-14	182 -164	2							R	5306-286-1458	G190
	183 -165										
NAS464-7-30	45 - 23	2							R	5306-207-4023	G190
NAS464-7A10	89 - 12	2									
NAS464-7A22	45 - 36	2									
NAS464-8-50	89 - 33	2							R	5306-283-0574	G190
	182 -176										
	183 -182										
NAS464-8A20	13 - 61	2									
NAS464-8A24	13 -110	4									
NAS464-9-15	154 - 25	2							R	5306-639-2515	G190
	156 - 10										
	358										
NAS464-9-27	164 -106	2							R	5306-639-2507	G190
NAS464-9-43	164 -123	2							R	5306-559-0644	G190
	357										
NAS464A14-37	23 - 9	4									
NAS464A14-41	23 - 8	6									
NAS464A14-43	23 - 6	6									
	23 - 7										
NAS464A14-47	23 - 32	6									
NAS464A14-53	23 - 28	2									
NAS464A14-55	23 - 31	2							R	5300-C00-0405	G190
	68 - 60										
NAS464A14-66	23 - 30	2									
	68 - 63										
NAS464P10-18	154 - 69	2									
NAS464P10-20	154 - 68	2									
NAS464P12A43	343 - 3	6									
	345 - 3										
	345A- 3										
	346 - 3										
	346A- 3	2									
	347 - 3										
NAS464P3-25A	179 - 9	1									
NAS464P3-4		1									
NAS464P3A13	163	2									
NAS464P3A4	13 - 72	1									
	13 - 74										
NAS464P4-15	176 - 79	4									
NAS464P4-16	176 - 92	1							R	5306-637-0374	G190
NAS464P4-18	47 - 14	1									
NAS464P4-21	47 - 15	1									
NAS464P4-27		1									
NAS464P4-6		2									
NAS464P4A	14 -224	3									
NAS464P4A10		1							R	5306-639-2289	G190
NAS464P4A15	163	2									
NAS464P4A5		2									
NAS464P4A6	47 - 7	2									
	175 - 61										
NAS464P4A63		2									
NAS464P4A9	13 - 4	2									
	176 - 24										
NAS464P5-14	164 - 54	2									
	165 - 62										
NAS464P5-22	176 -129	3									
NAS464P5-6		1							R	5306-514-8151	G190
NAS464P5-7	176 - 72	2									
NAS464P5A12	13	2									
NAS464P5A14	13	2									
NAS464P5A27	89 - 81	1									
NAS464P5A45	89 - 73	2									
NAS464P5A6	47 - 8	1									
NAS464P6-14	183 -115	1									
NAS464P6-53		1									
NAS464P6A20	24 - 8	2									
NAS464P6A37	175 - 90	1									
NAS464P6A56		1									
NAS464P7A14	83 - 90	2									
NAS464R4A10	176 - 1	1									
NAS484P4A		3									
NAS497	78 - 47	4									
NAS50-100	146 - 4	2							R	5340-252-4719	GH80
NAS50-108	143 - 33	2							R	5340-252-4739	GH80
NAS50-112		1							R	5340-252-4738	GH80
NAS50-118	45	5							R	5340-252-4740	GH80
	132 - 12										
NAS50-137	179 - 17	1							R	5340-252-4735	GH80
NAS50-143	157 - 19	2							R	5340-256-2843	GH80
	166 - 12										
	167 - 8										
NAS50-145	145 - 20	4							R	5340-663-2750	GH80
NAS50-156	21 - 28	1							R	5340-252-4745	GH80
	21 -136										
NAS50-162	191 - 7	5							R	5340-252-4744	GH80
	191 - 44										
	192 - 18										
NAS50-168	84 - 6	2							R	5340-252-4769	GH80
	131 - 31										
NAS50-173	2 - 31	1							R	5340-252-4768	GH80
NAS50-200		1							R	5340-252-4764	GH80
NAS50-231		2							R	5340-252-6863	GH80
NAS50-250		1							R	5340-252-4683	GH80
NAS50-300	334 - 52	1									
NAS50-31		1									
NAS50-325	100 -130	3							R	5340-598-1214	GH80
	101 - 95										
	102 - 69										
	103 - 93										
NAS50-77	142 - 35	4							R	5340-514-1293	GH80
	182										
NAS50-93	141 - 60	2							R	5340-514-1278	GH80
NAS500W-0010	3	8							R	5310-595-9693	G190
NAS501-3-10A	264 - 34	2									

PART NUMBER	FIGURE AND INDEX	TOTAL QTY.	MICRO-FILM NUMBER	MAINTENANCE CODE DATA: SOURCE CODE	INSTL CAPABILITY	PRE-INSTL CAPABILITY	RECOVERABILITY	SUPPORT EQUIPMENT	FEDERAL STOCK NUMBER DATA: COGNIZANCE CODE	FEDERAL STOCK NUMBER	MFG. CODE (TSMC)
NAS501-3-11A	330 - 4	2							R	5306-550-3401	G190
NAS501-3-12A	330 - 3	3							R	5306-637-7689	G190
NAS501-3-21A		2									
NAS501-3-3A	172 -104	1									
NAS501-3-5A	172 -131	1									
	264 - 54	4									
NAS501-3-6A	171 - 78	7							R	5306-282-8545	G190
	172 -126	1									
	330 - 9										
	357										
NAS501-3-7A	171 - 77	5							R	5306-550-3428	G190
	171 - 92										
	330 - 8										
	357										
NAS501-3H5A	264 - 40	2									
NAS501-3H6A	264 - 37	2									
NAS501-4-13	264 - 13	1									
NAS501-4-17	179 - 74	2							R	5306-576-0174	G190
NAS501-4-4A		12							R	5310-543-2277	G190
NAS501-4-6	264 - 66	3									
NAS501-4-7	329 - 1	8							R	5306-206-9552	G190
	329 - 20										
NAS501-4-7A		8							R	5300-C00-0248	G190
NAS501-6-10	264 - 12	1									
NAS5077		2									
NAS509-10R10		7									
NAS51-100		1							R	5340-252-4751	GH80
NAS51-125	188 - 16	1							R	5340-252-4755	GH80
NAS51-18	59 - 48	4							R	5340-263-5994	GH80
NAS51-25	12 - 81	2							R	5340-263-2712	GH80
	143										
	219 - 27										
NAS51-37	51 - 15	7		M		O			R	5340-523-6471	GH80
	204 - 2										
	337 - 43	2									
	340 - 34	2									
NAS51-50	362	2							R	5340-252-4724	GH80
NAS51-62	355 -161	2							R	5340-252-4732	GH80
	PG. 1015										
	PG. 1029										
NAS51-87		2							R	5340-598-1064	GH80
NAS510-4-70	59A- 43	1									
NAS516-1	12	25							R	4730-277-4870	G250
	17										
	19 - 11										
	19 - 33										
	20										
	21 - 29										
	21 - 38										
	21 - 42										
	21 - 46										
	21 - 85										
	172 - 10	1									
	172 - 14	1									
	172 - 65	1									
	172 - 68	1									
	172 - 82	1									
	172 -118	1									
	172 -120	1									
NAS557-10A		8							R	5325-543-4449	GB90
NAS557-12B		3							R	5325-550-4615	GB90
NAS557-14A		19							R	5325-558-3484	GB90
NAS557-16C		3							R	5325-543-4450	GB90
NAS557-20A		1		P					R	5325-558-7653	GB90
NAS557-6	87 - 22	2									
NAS557-6B	87 - 21								R	5325-641-2651	GB90
NAS557-8A		46							R	5325-558-7654	GB90
NAS557-8B		8		P					R	5325-543-4448	GB90
NAS557-8C		6							R	5325-543-4447	GB90
NAS561-8-28	362A- 5	2									
NAS561C2-11	56 - 10	6									
NAS561C3-6	334 -208	1									
NAS561C4-16	117 - 48	2									
NAS561C6-8	334 -163	1									
NAS561C8-58	347	2									
	348 - 38										
NAS561P3-16	321	1									
NAS564-4A16		6									
NAS645-175LL	362A- 12	1									
NAS645-175RL	362A- 9	1									
NAS687A3	337	8									
NAS698A3	10	1									
NAS70A261-1000		8							R	5310-183-4360	G192
NAS705T2	287 - 62	2									
NAS93003-26		1									
NAVAER 01-60JKD501A	PG. 1003	1									
NAVAER 01-60JKD502	PG. 1003	1									
NAVAER 01-60JKD512	PG. 1003	1									
NAVAER 01-60JKE502	PG. 1003	1									
NAVAER 01-60JKE502A	PG. 1003	1									
NAVAER 2033	PG. 1003	1									
NAVAER 418	PG. 1003	1									
NAVAER 418A	PG. 1003	1									
NA101-080	16	2							R	5310-559-0920	G190
	17	1									
NA2647-040	24	1									
NA2647-048	10	22							R	5310-596-8119	G190
	13										
	16 - 71										
	16 - 78										
	16 - 81										
	17										
	18										
	357										
NA2647-054	16	30							R	5310-638-1964	G190
	17										
NA2647-064	16	32							R	5310-637-8266	G190
	17										
NA2647-070	16	142							R	5310	
	24										
	25										
NA2648-048	10	1697							R	5310-596-8122	G190
	16 - 75										
	16 -128										
	357										
NA2648-054	17	581							R	5310-596-8112	G190
	18										
	357										
NA2648-064	16	7							R	5310-596-8113	G190
NA2648-070	16	118							R	5310-596-8114	G190
	24										
NA2674-070		1									
NA2748-054	16	4									
NA401-02		4									
NA5-7311-1		1									
NA501-02									R	5310-551-6763	G190
NA54-2		2									
NA54-2L	PG. 1004	1									
NA5464A-14-55		2									
NE-51		1									
NK-520-10-4	219	4									
NK-520-6-4	219 - 2	4									
NK5-8-6	357	2									
NK515C6-13	264 - 16	8									
NK520-10-12		1							R	5305-297-7489	G192
NK520-6-4		4							R	5305-637-8406	G192
NM2669	118 - 16	1							R	1680-571-5410	X110
NSBG-12SA		1									
NS121-048		1944									
NS121-054		308									
NS121-064		38									
NS122-048		516									
NS122-054		246									
NS122-064		32									
NS122-070		262									
NO.10		1		M		O					
NO.10A		1		M		O					
NO.10AN		1		M		O					
N3609		1		P1	F	O	C		R	6645-612-7156	D334
N410250-632		4							R	5300-C00-7134	G192
N50-125S	95 - 79	1									
	95 -127	1									
	97 - 78	1									
	97 -129	1									
N50-150S	93 - 58	1									
	94 - 60										
	95	1									
	95 - 37	1									
	95 - 71	1									
	97 - 31	1									
	97 - 71	1									
N50-175S	112 - 5	1									
N50-200S	95 - 44	1									
	95 - 52	1									
	96 - 5										
	97 - 39	1									
	97 - 41	1									
	97 - 43	1									
	97 - 49	1									
	97 - 51	1									
	99 - 15	1									
	100 - 31										
	101 - 11										
	101 - 28										
N50-250S	95 - 55	1									
	95 - 59	1									
	97 - 54	1									
	97 - 58	1									
	97 - 60	1									
OWT-712	216 - 13	1									
PA-100-C2	198	2									
PA-100-N2	198	2									
PA-100-S2	198	2									
PAC2279	350 - 87	1							R	4820-095-0733	Y120
PAC2279-1	231 - 22	1							R	1660-516-3740	A120
	350 - 87										
PC 3 1/2	284A										
PC3-1/2	55	54							R	5325-291-9360	GH80
	57										
	207										
	208										
	264 - 80	4									
	284										
	295										
	296 - 2										
	300										
	302										
	319	4									
PC3-112	301	4									
PDCM60	235	1									
PDLM-60	235	3							R	5925-227-0396	D334
	286 - 2										
	286 - 3										
	304 - 31										
	304 - 32										
PDLM105	226 - 3	4							R	5925-259-8285	D334
	234										
	238 - 1										
	281 - 2										
	303 - 23										

PART NUMBER	FIGURE AND INDEX	TOTAL QTY.	MICRO-FILM NUMBER	MAINTENANCE CODE DATA: SOURCE CODE	INST'L CAPABILITY	PRE-INST'L CAPABILITY	RECOVERABILITY	SUPPORT EQUIPMENT	FEDERAL STOCK NUMBER DATA: COGNIZANCE CODE	FEDERAL STOCK NUMBER	MFG. CODE (TSMC)
PEI-116A	179 - 2	1									
	227 - 2										
	251										
	254										
	265 - 8										
	271 - 2										
	286 - 14										
PEI-116B	179 - 2	1							R	1680-529-7935	D334
	222										
	227 - 2										
	251										
	254										
	265 - 8										
	271 - 2										
	286 - 14										
PEI-116C	179 - 2	1		P1	F	O	R		R	1680-540-8005	D334
PEI-116C	222										
	227										
	227 - 2	1									
	251										
	254										
	259 -274										
	265										
	271										
	271 - 2	1									
	286 - 14										
PEI-118A	222	1									
PFSC3-1/2-38		1									
PF3-1/2-38	55	45							R	5325-281-6231	GH80
	207										
	208										
	264										
	284 - 58										
PF3 1/2-38	284A- 17										
PF3-1/2-38	295 - 16										
	300 - 7										
	301 - 5										
	302 - 5										
	305 - 3										
	306 - 5										
	314 - 77										
	314 - 84										
	319 - 68										
PGM200	215	1							R	5925-175-5198	D334
	216										
	234										
	235										
	303 - 24										
	304 - 34										
PK350-6	PG. 1004	1									
PK74XZ-4-4		4									
PK74XZ-6-3		6									
PK74X2-4-4	PG. 1006	4									
	PG. 1008										
	PG. 1009										
PK79XZ-6-4	14	229							R	5305-638-9998	G192
	15										
PK79XZ-6-6	61	9							R	5305-639-0022	G192
PL285B-8	95	2									
	93	2									
PL35		2							R	5315-230-6246	GH80
PP493A/APG-30	213 - 25	1							R	1270-504-0712	FANN
PR83-1/2	55	2							R	5325-141-2521	GH80
	57										
	57A										
	310 - 12										
	310 - 18										
PR83-1/2-38		2									
PR701A		1									
PR703		1							R	8030-531-9326	G600
PR9502AC	279 - 30	1							R	5945-323-1671	DGEC
PS3-1/2	55	54							R	5340-201-0272	GH80
	57A										
	264										
	284										
	284A										
	295										
	296										
	300										
	302										
	305										
	306										
	310										
	319										
PS3-1/2-38	57	2									
PS3-112	301	4									
P116-447-10-24A	PG. 1006	1									
P200-3		26									
P200-4		8							R	5320-637-2077	G191
P200-5		2							R	5320-292-9058	G191
P4055B		2		P1							
P6M200		1									
QA116		1							R	2995-037-2833	X110
QB2468-1		1									
QB70520-1	PG. 1011	1							R	4920-510-4290	T030
QB71520-1	PG. 1011	1									
QB72451-1	PG. 1011	1							R	4920-590-8668	TECP
QB72468-1	PG. 1011	1							R	4920-590-8674	TECP
QB73000-1	PG. 1011	1							R	3320-373-9376	T030
QB73298-1	PG. 1011	1							R	4920-590-8669	TECP
QB73299-1	PG. 1011	1							R	4920-590-8684	TECP
QB73381-1	PG. 1011	1							R	5120-590-8685	TECP
QB73389-1	PG. 1011	1							R	4920-590-8686	TECP
QB73390-1	PG. 1011	1							R	4920-590-8687	TECP
QB75509-1	PG. 1011	1							R	4920-590-8689	TECP
QB75623-1	PG. 1011	1							R	5220-590-8676	TECP
QB75629-1	PG. 1011	1							R	4920-590-8678	TECP
QB75692-1	PG. 1011	1							R	5220-590-8677	TECP
QB75673-1	PG. 1011	1							R	4920-601-0655	TECP
QB75677-1	PG. 1011	1							R	5120-590-8690	TECP
QB75681-1	PG. 1011	1							R	4920-590-8691	TECP
QB75698-1	PG. 1011	1							R	5120-590-8692	TECP
QB75900-1	PG. 1011	1							R	4920-590-8694	TECP
QB75907-1	PG. 1011	1							R	4920-590-8696	TECP
QB75926-1	PG. 1011	1							R	4920-590-8699	TECP
QC106		1									
QG107		1									
QG109		1									
QG110		2									
QJ101		1									
QJ123		1									
QJ124		2									
QJ125		2									
QJ127		2									
QJ128		1									
QQ121		2							R	2995-098-4180	X110
QQ122-500-1		1									
QQ133		1									
QQ138		1									
QS100-500		1							R	2995-037-2834	X110
QS103		1									
QS200-M245		2		M		O			R	4730-640-0207	PALE
QTI06		1									
QV103		1							R	2995-338-0051	X110
QV114		1									
QV115		1									
QX115-1		1									
QX117		1							R	2995-338-0052	X110
QX119		1									
QX120		1							R	2995-338-0053	X110
QX121		1									
QX124		1									
QX126-1		1									
QX129-1		1									
QX133		1									
QX134		1									
QX167-1		1									
QX168-1		1									
QX169-1		1									
QX186-1		1									
QX230		1									
QX233		1									
QX246		1									
QY166		1							R	2995-338-0054	X110
QY167		1									
QY171		1									
QY173-1		1									
QY174		1									
QY204-1		1									
QY205-1		1									
QY206		1							R	2995-037-2835	X110
QY206-1	213	1									
QY206-5	278	1									
QY287		1									
QY293		1									
QY349		1									
R-3800-4-9-5/R		1									
R-3800-6-8-0300		1									
R-4T		10							R	5340-281-9878	GH80
R-540/ARN-14C	210 - 32	1							R	5800-CD3-2727	FANN
RAD207SH-7.5L	78 - 51	2									
RA2-487-2	58 - 42	3									
RA2-487-3		2									
RA2258-2	197 - 32	1							R	4010-491-5532	G313
	198 - 27										
RA2258-3	195 - 37	2		M		O			R	4010-491-5533	G313
	203 - 75										
	203 - 77										
RA2482-2	PG. 1004	4									
PA2482-3	200	1		M		O			R	4030-515-6251	G313
RA2487-2	184	4		M		O			R	4030-530-0701	G313
	184 - 65	1									
	197										
	198										
	334 - 36	2									
	361 - 2										
	361 - 10										
	361 - 18										
	PG. 1004										
RA2487-3	195	1									
	200										
	203										
	204										
	334	1									
RA2487-4	PG. 1009	2									
RA2490-18	PG. 1005	2									
RA2500-2	86	2							R	4030-530-0703	G313
	197										
	198										
	199										
RA2500-3	35 - 61	18		M		O			R	4030-273-9277	G313
	35 - 68										
	35 - 71										
	196										
	200										
RA2610-2		6		P1					R	4030-431-5543	G313
RA2944-18	PG. 1005	4									
RBC-74220		4		M		O					
RBC74164	40 - 14	6							R	3110-159-1719	G730
	45 - 7										

PART NUMBER	FIGURE AND INDEX	TOTAL QTY.	MICRO-FILM NUMBER	MAINTENANCE CODE DATA: SOURCE CODE	INST'L CAPABILITY	PRE-INST'L CAPABILITY	RECOVERABILITY	SUPPORT EQUIPMENT	FEDERAL STOCK NUMBER DATA: COGNIZANCE CODE	FEDERAL STOCK NUMBER	MFG. CODE (TSMC)
RBC74220	78 - 58	1									
	80 - 20										
RB2085B-9		2									
RC20AE473K	284	1									
RC20A104K	284	1									
RC20GF102J	210	1									
RC20GF102K	210	1									
RC20GF511J	210	1									
RC21AE511J	210	1									
RC21AE511K	210	1									
RC30GF331M		1									
RC30GF337		1									
RD103SB-5L	96	14							R	5340-505-7766	G192
	102										
RD103SB-91	103	2									
RD103SB5L		2							R	5340-505-7766	G192
RD104SB-9L	338	28							R	5340-505-7767	G192
	339 -114										
RD185B-6		2									
RD205SB-5.5L	10	45							R	5340-209-8167	G190
	112										
	128 - 42										
	172 -138	1									
	173 - 12										
	194 - 23										
	264										
	334 -191										
	334 -225										
	335 - 86	3									
	335 - 88	10									
	338										
	339										
	340 - 39										
RD205SB-5.5L	338	4									
RD205SB.5L		11		P1					R	5340-209-8167	G190
RD205SB5.61	337 - 49	6									
RD206SB-6.5	138	2							R	5340-505-7768	G192
	188										
RD206SB-6.5L	16 - 29	25							R	5340	
	21										
	93										
	94										
	95										
	97										
	104	12									
	105										
	138 - 47										
	138 - 67										
	182										
	183										
	335 - 83	3									
RD206SB-6.52	183	1									
RD206SB-65L	182	1									
RD206SC-6.5L	176	1									
RD206SH-6.5L	180 - 28	2							R	5340-200-4029	G192
	184										
	185										
RD206SH65L	184	1									
RD206SB-6.5L	155	3									
RD208SB-9	334 -227										
RD208SB-9L	21	1									
RD209SB-9L	76	1		M		0			R	5340-637-6196	G190
RD296SB-6.5L	97	4									
RE-120/ARA-25	209 - 32	2							R	5945-238-9572	FANN
	209 - 34										
RE-120A/ARA-25		1							R	5826-646-4876	F531
REB3N	181 - 23	4		M		0			R	3110-173-5072	G730
	196 - 13										
	200										
REB3N2	41 - 20	7							R	3110-173-5075	G730
	163 -114										
	193 - 26										
	198 - 83										
RER3N2		1									
RE3FN	200 - 80	1									
RE3F4		1		M		F			R	3110-173-5073	G730
RE3H5		1							R	3110-173-5069	G730
RE3M6-2N		1									
RE4F5	163 - 21	18							R	3110-173-5077	G730
	175 - 7										
	180 - 14										
	180 - 42										
	182 - 40										
	183 - 40										
	186 - 15										
	186 - 58										
	188 - 66										
	189 - 37	1									
	193 - 43										
	198 -113										
	204 - 66	2									
RE4F5-2	182 - 35	5							R	3110-277-0646	G730
	198 -120										
RE4F5R	189 - 39	1									
RE4ML6	174 - 19	1							R	3110-198-1249	G730
RE4M6	81 - 11	2							R	3110-183-7542	G730
	175 - 75										
	176 - 70										
	180										
	205 - 30										
RE45-2	183 - 36	1									
RF3-1/2		4									
RG-11510-C	98 - 72	2		P1	F	0	R		R	2915-529-3689	ZROC
	99 -104										
	100 -208										
	103 - 1										
	105 - 2										
RG11510-C	99 -105	1									
	249										
	250										
RG33A-4	264 - 63	1									
RG33B-1	266 - 1	1									
RG33B-2	266 - 1	1									
RG62/U		3							R	6145-635-1399	E212
RG8AU		1							R	6145-220-9092	E212
RL185B-6	96	14							R	5310-497-3782	G192
	102										
	103										
RL185B6		7									
RL205SB5.5L		1									
RL208SB-9		2									
RL215B-6	338 - 88	28							R	5310-200-3855	G192
	339										
RL215B-7		6									
RL245B-7	10	53							R	5310-200-7749	G192
	112	53							R	5310-200-7749	G192
	128 - 43										
	172 -137	1									
	173										
	194 - 22										
	264 - 26	2									
	334 -224										
	337 - 48	6									
	338										
	339										
	340 - 38										
RL245B7	335	10									
	335 - 87	3									
RL245B-7		17									
RL285B-8	16 - 28	26							R	5310-596-5615	G192
	21										
	93										
	94										
	95										
	97										
	104	12									
	105										
	138										
	155										
	335	3									
RL285B8	184	1									
RL335B-9	78 - 50	2							R	5310-497-3787	G192
RL385B-9	21	12							R	5310-092-1621	G192
	334	2									
RL475B-10	76	1		M		0			R	5310-200-7745	G192
RP-A57-018-0TF-0875		1									
RP-79-022-094-10		1									
RR75C		1							R	5340-205-5079	GH80
RS-132-32		1							R	2915-514-6025	Y120
RS-5-125	95	1									
	97	1									
RS-5-150	93	1									
	94	1									
	95	1									
	95	1									
	95	1									
	97	1									
RS-5-200	95	1									
	96										
	97	1									
	99	1									
	100										
	101										
RS-5-250	95	1									
	97	1									
RS103SB-5	16 -127	2									
RS108-100	140 - 23	1							R	1600-373-8078	Y120
RS131-32	140 - 25	1							R	5340-282-0744	GH80
RS5-175	112	1									
RS5-200	97 - 51	1									
RT-1C-F5	30 - 70	4							R	3110-277-0583	G730
RT-17B/ARC-27	209 - 2	1							R	5820-036-7353	FC9C
RT-2C-11		2									
RT-220/ARN-21	211 - 4	1							R	5880-C03-2689	FANN
RT-322/APG-30		1									
RT-322/APG-30A	213 - 22	1							R	1270-504-7446	F733
RT-82A/APX-6	122 - 1	1									
	212 - 1	1							R	5840-026-9410	FANN
RT-82B/APX-6	212 - 1	1							R	5895-534-3163	FANN
RT-82C/APX-6	212 - 1	1									
RU4C561K	270 - 46	3									
RV4C561K		3		P1							
RW20G501	221	4									
	262 - 7										
	288										
RW30F450	210	1									
	211										
	295 - 17										
RW30G101	233	2									
	305 - 29										
	306 - 33										
RW30G350	233	1									
	305 - 31										
	306 - 35										
RW30G630	256 - 4	2									
	305 - 30										
	306 - 34										
RW33G220		1									
RW33V180	241 - 69	1									
RW34G110	241 - 36	1									

PART NUMBER	FIGURE AND INDEX	TOTAL QTY.	MICRO-FILM NUMBER	MAINTENANCE CODE DATA: SOURCE CODE	INSTL CAPABILITY	PRE-INSTL CAPABILITY	RECOVERABILITY	SUPPORT EQUIPMENT	FEDERAL STOCK NUMBER DATA: COGNIZANCE CODE	FEDERAL STOCK NUMBER	MFG. CODE (TSMC)
RW34G630	241 - 35	2									
	241 - 43	1									
RW35V110	241 - 42	1									
RW40J110		1									
RW40J200		1									
RW40J400		1									
RW40J8R3		1							R	5905-279-7493	E222
R20045		1									
R210-5812L		1							R	5340-663-9866	G192
R3B3N2	197 - 77	2									
R3800-NA-4-0090	320	1							R	4720-564-1301	G250
	328 - 31										
R3800-NA-4-0094	320	1									
	328										
R3800-NA-4-0105	320	1							R	4720-564-1302	G250
	328										
R3800-NA-4-0110	320	1							R	4720-565-3541	G250
	328 - 30										
R3800-NA-4-0120	320	1							R	4720-564-1303	G250
	328										
R3800-NA-4-0134	320 - 56	1							R	4720-564-1304	G250
	328										
R3800-NA-4-0153	320 - 55	1							R	4720-564-1305	G250
	328										
R3800-NA-4-0182	320	1							R	4720-564-1306	G250
	328										
R3800-NA8-0330	334 -111	1									
R3800-4-9	219	1							R	4720-698-4716	G250
	357										
R3800-4-9-5/8	219 - 49	3									
	219 - 50										
	357										
R3800-5-0126		1									
R3800-6-0070	339 - 76	1									
R3800-6-0136		1									
R3800-8-0300	349 - 72	1									
R3800X-5-0126	352	1									
R3800X-6-0136	352	1									
R3805-5-0094	352 - 35	1							R	4720-606-1748	G250
R4G	334	3									
R4T	71	14									
R8120	54	1									
R87-1001-30-00	191 - 66	1		P1	F	O	S		R	1680-569-2505	X110
R87-1002-30-00	192 - 45	1		P	F	O	S		R	1680-569-2506	X110
R88H500	92	1									
S-1452-048	45 - 8	4									
	83 - 54										
	182										
	183										
S-1452-054	11 - 27	5									
	66 - 7										
	83 - 85										
S-1452-064	116	8							R	5310-174-7420	G190
S-1452-070	143 - 11	8							R	5310-174-7421	G190
S-1452-126	90	2									
S-214	141 - 62	2									
S-23604-0900	320	1									
	328 - 31										
S-23604-0903	320	1									
	328										
S-23604-1010	320	1									
	328										
S-23604-1100	320	1									
	328 - 30										
S-23604-1200	320	1									
	328										
S-23604-1308	320 - 56	1									
	328										
S-23604-1506	320 - 55	1									
	328										
S-23604-1804	320	1									
	328										
S-23604-2100		1									
S-23605-01200		1									
S-23605-01212		1									
S-23605-01312		1									
S-23606-01312		1									
S-513-50-3	152 - 5	1		P1					R	1600-C02-1688	Y120
S-8335B	350 - 20	2		P1	F	O	S		R	1680-099-5350	X110
	351 - 27										
S-9281-1	119 - 3	1									
S-9281-2	119 - 4	1									
SA-15P		4							R	5935-258-4160	D336
SA-155		6									
SB23-616	234 - 1	1							R	5310-550-1965	G190
	235 - 1										
	279 - 1										
SC5816-2	219	1							R	6610-515-5770	V170
	275										
SE-16-2	215 - 1	1							R	6125-635-9811	D444
	216 - 1										
SE-16-3	215 - 1	1							R	6125-519-0221	D334
	216 - 1										
SE-5-2	215 - 3	1							R	6125-635-8945	D334
	216 - 3										
SF4749-37-3/8		2		P1	F	O	C				
SH22PL-2		1							R	5935-205-7361	V170
SK1084		1									
SK1084-514	353 - 1	1									
SK1798P6		3									
SK1798P67		3									
SK1798S		1									
SK4745-A-39-1/4	178 - 29	1									
SK4745-D-39-1/4	178 - 29	1		P1					R	1680-517-1547	X110
SK4746-16-3/4		1							R	1680-323-4211	X110
SK4746-17-3/4		1							R	1680-323-4212	X110
SK4746-26-3/4		1									
SK4746-29-3/4		1							R	1680-323-4213	X110
SK4746-36-3/16		1							R	1680-323-4214	X110
SK4746-42		1									
SK4748-20	178 - 11	2		P1	F	O	C		R	1680-517-1544	X110
SK4748-20-9/16		2							R	1680-323-4208	X110
SK4748-26-3/8	178 - 14	1							R	1680-323-4206	X110
SK4748-37-3/8	178 - 13	1							R	1680-323-4207	X110
SK4748-38-5/8	178 - 12	2		P1	F	O	C		R	1680-323-4209	X110
SK4749-26-3/8		2		P1	F	O	C		R	1680-323-4206	X110
SK4749-37-3/8		2							R	1680-323-4207	
SK4755	173 - 55	1							R	1680-603-1144	X110
SK4756-7		1							R	1680-323-4203	X110
SK4760	175 - 45	2							R	1680-323-4204	X110
SK4800		1							R	1680-323-4205	X110
SK797		1									
SLZ2018J	221 - 19	1									
SLZ2018K	221	1									
SLZ2018L		1									
SLZ2167	221 - 18	4							R	6610-514-5630	VJAY
	224 - 16										
	277 - 6										
	315 - 49										
SLZ21670		1									
SLZ2168		1									
SLZ2270-1	221 - 20	1									
SLZ2276	PG. 1003	1							R	6610-575-9343	V170
SLZ2303	221 - 19	1		P1	F	O	R		R	6610-571-1811	VTMR
SLZ2550		1		P1	F	O	C		R	6610-613-9475	W180
SLZ9036	221 - 18	1		P1	F	O	R		R	6610-608-1833	V170
	224										
	277 - 6										
	315 - 49										
	318 - 44										
SP-1A		1									
SP-103-16	273	1									
SP101-10		1							R	6610-C01-8872	V170
SP103-1		1									
	278 - 32	1							R	6610-535-9979	V170
SP103-11	270 - 75	2							R	6610-535-9978	V170
	315										
SP103-14	260 - 37	4									
	315 - 25										
SP103-16	273	1		P1	F	O	S		R	6685-515-4587	
	315 - 27										
SP103-9		2							R	6610-514-6165	V170
SP1561-032-8	121 - 1	10									
SP1561-1032-10	35	24							R	5300-C00-9564	G192
	97										
	57A										
	119 - 19										
	205 - 9										
SP1561-1032-318		4									
SP1561-1032-8	119 - 14	174							R	5305-639-5144	G192
	119 - 18										
	119 - 20										
	356 - 4	3									
SP1561-1032SS8	88 - 31	31									
	88 - 33										
	88 - 34										
	88 - 36										
	88 - 37										
	88 - 38										
	88 - 39										
	88 - 40										
	88 - 41										
	88 - 42										
SP1561-832-11		1									
SP1561-832-12	52 - 68	3									
SP1561-832-8		4									
SP4D40-1032-10		7									
SR-94A	273	1		P1	F	O	R		R	6685-590-7464	V170
	318 - 22										
SS25-80		3									
SS44431906-503	60 - 9	1									
SS91176		1		M		O			R	5340-531-6854	GH80
ST104H	273 - 6	1									
	355										
	PG. 1016										
	PG. 1025										
ST52P	205 - 15	1							R	5930-459-0301	D444
	224										
SW-134		1									
SW-2A	273	1							R	5930-296-6896	V170
	355 - 77										
	PG. 1016										
	PG. 1025										
SW1AL-14-14-16	285A	2									
S0-1000-2		7									
S1-2399-1-2-N119-3	243	1									
	279										
S1-2399Z-N119-3	243	1		P1					R	5945-506-1678	D336
	244										
	279										
S10K140		4							R	5310-208-3190	G191
S1452-048	358	1									
S17577	210 - 30	1									
S17578	210 - 31	1									
S22PA2		11		P1							
S22PA3		1									
S22PE-2	249										
S22PE2		10		P1					R	5935-201-7362	V170
S22PE3		1		P1							
S22PF2		1							R	5935-201-6316	V170

PART NUMBER	FIGURE AND INDEX	TOTAL QTY.	MICRO-FILM NUMBER	MAINTENANCE CODE DATA: SOURCE CODE	INSTL CAPABILITY	PRE-INSTL CAPABILITY	RECOVERABILITY	SUPPORT EQUIPMENT	FEDERAL STOCK NUMBER DATA: COGNIZANCE CODE	FEDERAL STOCK NUMBER	MFG. CODE (TSMC)
S22PH-2	249	1									
S22PH2		42		P1					R	5935-201-7360	V170
S22PH3		1		P1					R	5935-573-3044	WLOD
S22PL-2	249	1									
S22PL2		42		P1					R	5935-201-7359	V170
S22PL3		1		P1					R	5935-573-3045	WLOD
S22PR-2	249	1									
S22PR2		3							R	5935-201-7361	V170
S22PR3		1		P1					R	5935-573-3046	WLOD
S221	67 - 19	1							R	5340-597-0909	GH80
S278A		1		P1					R	5935-505-7875	V170
S278E		1							R	5935-505-7867	V170
S278H	247 - 69	2		P1	F	O	C		R	5935-201-6312	V170
S278L	247 - 72	1		P1	F	O	S		R	5935-201-6306	V170
S278R	247 - 75	2		P1	F	O	S		R	5935-201-6307	V170
S288A		1							R	5935-201-6311	V170
S288E		1							R	5935-201-6310	V170
S288H	247 - 78	1							R	5935-201-6309	V170
S288L	247 - 81	1							R	5935-201-6305	V170
S32TA		1							R	6680-305-5456	V170
S32TE		1							R	6680-305-2557	V170
S32TH	247 - 53	2							R	5935-201-6313	V170
	247 - 83										
S32TL	247 - 54	2		P1					R	5935-201-6308	V170
	247 - 84										
S3431905-501-37	60	1									
S4431919-37	60 - 13	1									
S468H		2									
S468H2		2							R	5935-204-9237	V170
S468L		2									
S468L2		2							R	5935-204-5860	V170
S47TA		1									
S47TE		1									
S47TH	247 - 47	1		P1	F	O	C		R	6680-303-9640	WLOD
S47TL	247 - 48	1		P1	F	O	C		R	6680-303-9641	WLOD
S48		1									
S48EH		2									
S48EL		1									
S513-50-3		1							R	1650-516-2101	Y120
S62PA2		6							R	5935-501-5680	V170
S62PE2		6							R	5935-501-5681	V170
S62PF2		2							R	5935-501-5678	V170
S62PH2		42									
S62PL2		36							R	5935-501-5679	V170
S62PR2		4							R	5935-501-5682	V170
S698L		1									
S678H2		2									
S678L2		2									
S84077		1							R	1680-099-5353	X110
59-552-1-5	358	1									
T-R4-5		2									
TA489-B10		10									
TA490-B10		148									
TA490-C10		12									
TA490-F10		3									
TA490-T10		17									
TA512-D20-29		1							R	5340-526-2560	GH80
TA520-D-8-16		2							R	5340-209-8273	GH80
TA520-D-9-17		2									
TA520WD-20-29		1									
TA6C1-6		2									
TA710-D3		1									
TA710-D3HT		7									
TA710-D6HT		12									
TA710-2		6									
TA710-4		1									
TA716-D10HT		4							R	5340-663-1327	GH80
TA716-D12HT		8							R	5340-663-1325	GH80
TA716-D16HT		3									
TA716-D2HT		5									
TA716-D24HT		1							R	5340-663-1959	GH80
TA716-D26HT		2							R	5340-598-4214	GH80
TA716-D8	355	1									
	PG. 1016										
	PG. 1025										
TA716D3HT		13							R	5340-282-7971	GH80
TA716D4HT		16							R	5340-634-7849	GH80
TA716D5HT		16							R	5340-663-0845	GH80
TA716D6HT		10							R	5340-663-0844	GH80
TA716D7HT		31							R	5340-663-0843	GH80
TA716D8HT		6							R	5340-634-7849	GH80
TA716D9HT		3							R	5340-282-7970	GH80
TA716SS37FG		1		N		F					
TA716S10HT		4							R	5340-663-1329	GH80
TA716S12HT		5							R	5340-205-5967	GH80
TA716S16HT		2									
TA716S2HT		5							R	5340-663-1951	GH80
TA716S4HT	358	11							R	5340-663-1961	GH80
TA716S5HT		16							R	5340-634-7272	GH80
TA716S6HT	358	10							R	5340-663-1958	GH80
TA716S7HT		1							R	5340-663-1324	GH80
TA716S8HT	358	11							R	5340-663-1328	GH80
TA716S9HT		3							R	5340-663-1326	GH80
TA724D4		1									
TA724524AF	355	1									
	PG. 1014										
TA774D2-10		1							R	5340-664-8189	GH80
TA774D2-11		1							R	5340-531-6855	GH80
TA774D2-7		3							R	5340-282-7969	GH80
TA774D2-7HT		1							R	5340-664-9007	GH80
TA774D2-8		3							R	5340-598-4198	GH80
TA774D2-8HT		1							R	5340-508-3674	GH80
TA774D2-9		1									
TA774D2-9HT		3							P	5340-282-7964	GH80
TA776D2-8		1									

PART NUMBER	FIGURE AND INDEX	TOTAL QTY.	MICRO-FILM NUMBER	MAINTENANCE CODE DATA: SOURCE CODE	INSTL CAPABILITY	PRE-INSTL CAPABILITY	RECOVERABILITY	SUPPORT EQUIPMENT	FEDERAL STOCK NUMBER DATA: COGNIZANCE CODE	FEDERAL STOCK NUMBER	MFG. CODE (TSMC)
TA940B10		148									
TB116900	98 - 72	2		P1	F	O	R		R	2915-529-3692	ZFED
	99 -104										
	99 -105										
	100 -205										
	104 - 1	2									
	105 - 1										
	105 - 2										
	246 - 6										
TD-800	279 - 29	1							R	5945-258-2780	D444
TD-805H	279 - 29	1									
TD-805H3	279 - 29	1									
TD-812	279 - 29	1									
TD-812A	279 - 29	1									
TD812A		1									
TF95400-3		1							R	2915-639-9136	ZTPC
TF99560	246	1									
	249										
	250										
TGT7200-4	105 - 67										
	105 - 68										
	355 -235										
	PG. 1014										
TI523		2									
TJF-108		1									
TJF107	PG. 1011	1									
TJF108		1									
TOE3-301	330 - 29	1									
TQ1003AL	PG. 1011	1									
TQ250	PG. 1011	1									
TQ3	PG. 1011	1									
TQ602A	PG. 1011	1									
TR-12006	119 - 3	1									
	119 - 4										
TRANSMIT. FUEL FLOW	355 - 76										
TSCH718		1									
TUBE 20X4.4	64	1									
TYPE 312	209 - 36	1							R	5985-324-1664	F733
	211										
T170	361 - 8	3									
	361 - 15										
	361 - 23										
	PG. 1011										
T2518	PG. 1007	1									
T2519	PG. 1007	1									
T2520	PG. 1007	4									
T2521	PG. 1007	1									
T2522	PG. 1007	1	DM218								
T2523		2									
T2533	PG. 1007	1		P1			S		R	1560-091-3641	SNAA
T2573	PG. 1011	1	DL205						R	5220-606-1711	SNAA
T2580-11	PG. 1006	1		P			C		R	5120-346-1072	SNAA
T2586	PG. 1005	1		P1			C		R	4920-037-2341	SNAA
T2587	PG. 1005	1		P1			C		R	4920-300-3690	SNAA
T2588-11	PG. 1005	1							R	5120-293-0334	S231
T2589-11	PG. 1006	1		P			C		R	5120-596-4349	SNAA
T2590	PG. 1008	1		P1			S		R	5120-098-4379	S231
T2591	PG. 1008	1									
T2592	PG. 1008	1									
T2593	PG. 1008	1									
T2594	PG. 1008	1									
T2595	PG. 1008	1									
T2596	PG. 1008	1	DM196	P1			C		R	5120-098-4380	S231
T2597-101	PG. 1009	1									
T2598	PG. 1008	1		P1			S		R	4920-037-2342	SNAA
T2599	PG. 1008	1									
T2600	PG. 1008	1									
T2601	PG. 1008	1		P1			C				
T2602	PG. 1008	1							R	4920-037-2343	SNAA
T2603-101	PG. 1009	1									
T2603-201	PG. 1008	1									
T2605-1	PG. 1008	1	DJ157	P1			S		R	4920-037-2344	SNAA
T2605-2	PG. 1008	1	DJ157	P1			S		R	4920-037-2345	SNAA
T2606-1	PG. 1008	1	DJ159	P1			S		R	4920-037-2346	SNAA
	PG. 1009										
T2606-2	PG. 1008	1	DJ159	P1			S		R	4920-037-2347	SNAA
	PG. 1009										
T2607-1	PG. 1009	1	DL150								
T2607-2	PG. 1009	1	DL150								
T2608-1	PG. 1009	1	DL 71								
T2608-2	PG. 1009	1	DL 71								
T2609-1	PG. 1008	1	DL159								
T2609-2	PG. 1008	1	DL159								
T2610-1	PG. 1009	1	DJ152	P1			S		R	4920-037-2348	SNAA
T2610-2	PG. 1009	1	DJ152	P1			S		R	4920-037-2349	SNAA
T2611	PG. 1008	1	DL 79								
T2612-1	PG. 1008	1	DL151								
T2612-2	PG. 1008	1	DL151								
T2613	PG. 1009	1	DL164								
T2614	PG. 1009	1		P			C		R	5120-098-4341	S231
T2615-1	PG. 1006	1	DJ154								
T2615-2	PG. 1006	1	DJ154								
T2616-1	PG. 1006	1	DQ 67	P1			S		R	4920-037-2350	SNAA
T2616-2	PG. 1006	1	DQ 67	P1			S		R	4920-037-2351	SNAA
T2622-101	PG. 1006	1									
	PG. 1009										
T2623-1	PG. 1009	1									
T2623-2	PG. 1009	1									
T2625-3	PG. 1006	1									
T2625-5	PG. 1006	1									
T2637-101	PG. 1008	1									
T2644	PG. 1010	1		P1			C		R	5120-521-0707	SNAA
T2645-1	PG. 1011	5		P			C		R	1730-310-5085	SNAA
T2645-2	PG. 1011	4		P			C		R	1730-310-5086	SNAA
T2668	328 - 56	1		P			C		R	4920-345-9432	SNAA

PART NUMBER	FIGURE AND INDEX	TOTAL QTY.	MICRO-FILM NUMBER	MAINTENANCE CODE DATA: SOURCE CODE	INST'L CAPABILITY	PRE-INST'L CAPABILITY	RECOVERABILITY	SUPPORT EQUIPMENT	FEDERAL STOCK NUMBER DATA: COGNIZANCE CODE	FEDERAL STOCK NUMBER	MFG. CODE (TSMC)
	PG. 1006										
T2675	PG. 1006	1		P			C		R	5120-596-8628	SNAA
T2684	PG. 1006	1	DQ 69	P			S		R	4920-345-9433	SNAA
T2694	PG. 1011	1	DJ 3						R	5120-546-1198	S120
T2694-11	PG. 1011	1	DR109	P1			S		R	5110-340-2567	S210
T2694-13	PG. 1011	1	DR109	P1			S		R	5110-340-2569	S210
T2694-15	PG. 1011	1	DR109	P1			S		R	5110-340-2570	S210
T2694-17	PG. 1011	1	DR109	P1			S		R	5110-340-2571	S210
T2694-19	PG. 1011	1	DR109	P1			S		R	5110-340-2572	S210
T2694-21	PG. 1011	1	DR109	P1			S		R	5110-340-2573	S210
T2694-3	PG. 1011	1	DR109	P1			S		R	5110-340-2574	S210
T2694-5	PG. 1011	1	DR109	P1			S		R	5110-340-2575	S210
T2694-7	PG. 1011	1	DR109	P1			S		R	5110-340-2576	S210
T2694-9	PG. 1011	1	DR109	P1			S		R	5110-340-2578	S210
T2697	PG. 1009	2		P			C		R	4920-338-3951	SNAA
T2698	PG. 1009	2		P			C		R	5120-339-9777	SNAA
T2699	PG. 1007	1	DL 73						R	4920-338-3954	SNAA
T2700	PG. 1007	1	DL152						R	4920-338-3958	SNAA
T2701	PG. 1006	1		P1			S		R	4920-338-3960	SNAA
T2702-3	PG. 1007	1									
T2702-5	PG. 1007	1									
T2705	PG. 1009	1		P1	M	O	S		R	5120-562-4882	SNAA
T2706	PG. 1009	1		P1	M	O	S		R	5120-562-4883	SNAA
T2707	PG. 1009	1	DR110						R	5120-602-3758	SNAA
T2709	PG. 1010	1	DK 66	P			C		R	5120-602-3648	SNAA
T2710	PG. 1011	1	DG222	P1			S				
T2711	PG. 1011	1									
T2712	PG. 1011	1									
T2713	PG. 1011	1									
T2714	PG. 1011	3									
T2715	PG. 1011	1									
T2716	PG. 1011	1		P			S				
T2717	PG. 1011	2									
T2718	PG. 1011	1									
T2719	PG. 1011	1		P			S				
T2720	PG. 1011	1									
T2721	PG. 1011	1									
T2722	PG. 1011	1									
T2723	PG. 1011	1		P			S				
T2724	PG. 1011	1	DG174	P			C				
T2725	PG. 1011	1		P			S				
T2726	PG. 1011	1									
T2727	PG. 1011	1		P			C		R	4920-604-2693	SNAA
T2728-1	PG. 1009	1		P1	M	O	S		R	1730-520-0941	SNAA
T2728-11	PG. 1009	1									
T2729-1	PG. 1010	1		P1	M	O	S		R	1730-520-0942	SNAA
T2730	PG. 1011	1		P1			S				
T2731-3	PG. 1012	1		P			C				
T2731-5	PG. 1012	1		P			C				
T2731-7	PG. 1012	1		P			C				
T2732	PG. 1012	1		P			S				
T2736	PG. 1009	1	DJ165						R	1730-586-4265	SNAA
T2738	PG. 1012	1		P1	M	O	S		R	1730-560-2270	SNAA
T2739	PG. 1006	4									
	PG. 1008										
	PG. 1009										
T2740	PG. 1010	1									
T2741	PG. 1006	1		P1	M	O	S		R	5120-560-2271	SNAA
T2741-3	PG. 1006	1									
T2741-5	PG. 1006	1									
T2741-7	PG. 1006	1									
T2741-9	PG. 1006	1									
T2742-11	PG. 1010	1									
T2743	PG. 1010	1	DK 70	P			C		R	5120-600-2089	SNAA
T2744	PG. 1012	1	DL110						R	4930-602-7142	SNAA
T2745	PG. 1012	1	DL111						R	4930-603-1135	SNAA
T2746	PG. 1009	1									
T2747-1	PG. 1008	1							R	4920-613-9577	SNAA
	PG. 1009										
T2747-2	PG. 1008	1							R	4920-613-9578	SNAA
	PG. 1009										
T2747-3	PG. 1009	2									
T276-20	328 - 60	1		P			C		R	1560-091-3642	SNAA
	PG. 1006										
T2831	PG. 1010	1	DR342								
T2832	PG. 1010	1	DR339						R	5120-600-2088	SNAA
T2833	PG. 1010	1							R	5120-602-3649	SNAA
T2845-1	PG. 1009	1									
T2845-2	PG. 1009	1									
T2854-1	PG. 1009	1									
T2854-2	PG. 1009	1									
T2856-1	PG. 1009	1									
T2856-2	PG. 1009	1									
T308	PG. 1008	1		P1			C		R	1560-094-6504	SNAA
	PG. 1009										
T309	PG. 1008	1		P			S		R	1560-094-6505	SNAA
	PG. 1009										
T310	PG. 1009	1		P			C		R	1560-094-6506	SNAA
U-61/U	209 - 45	1									
UC618/U		1									
UD1		1							R	5935-187-4573	D336
UD6-11		2							R	5935-283-1472	D336
UE12-11		4							R	5935-283-1477	D336
UFT20	344 - 16	10									
	344 - 22										
	345 - 16										
	346 - 17										
	347 - 25										
UFT5T20		4									
UF5G20		3									
UF5T-20	334 - 64	10									
	334 - 81										
	334 -138										
UF5T-50	334 - 65	8									
UF5T10	88 - 46	36							R	5325-523-6570	GH80

PART NUMBER	FIGURE AND INDEX	TOTAL QTY.	MICRO-FILM NUMBER	MAINTENANCE CODE DATA: SOURCE CODE	INST'L CAPABILITY	PRE-INST'L CAPABILITY	RECOVERABILITY	SUPPORT EQUIPMENT	FEDERAL STOCK NUMBER DATA: COGNIZANCE CODE	FEDERAL STOCK NUMBER	MFG. CODE (TSMC)
UF5T20	88 - 47										
	44 - 40	T6							R	5325-373-3919	GH80
	44 - 56										
	44 - 86										
	71 - 19										
	88 - 48										
	315 - 57										
	315 - 57										
	318 - 56										
	335 - 18	6									
	335 - 19	3									
	335 - 27	2									
	335 - 56	3									
	335 - 61	2									
UF5T30	44 - 5	8							R	5325-373-3919	GH80
	88 - 45										
	335 - 20	1									
	335 - 21	2									
	344 - 25										
	345 - 25										
	346 - 24										
UF5T40	44 - 7	12		M		O			R	5325-639-5098	GH80
	44 - 16										
	44 - 48										
UF5T50	44 - 6	14							R	5325-599-9146	GH80
UG107B/U		1							R	5935-049-3304	FANN
UG218/U	269 - 2	2									
	269 - 7	1									
UG212/U		1									
UG212A/U		2		P1							
UG22B/U		1							R	5935-259-3443	E212
UG260A/U		4							R	5935-373-1968	FANN
UG27B/U		1							R	5935-295-6287	E212
UG27C/U	269 - 3	1									
	269 - 8	1									
UG274A/U		9		P1							
UG274AU		1							R	5935-201-2876	FANN
UG28A/U	269 - 6	1									
UG57B/U	269 - 5	1									
UG58A/U	269 - 4	1									
UG59A/U		2							R	5935-149-4069	E323
UG59B/1		4							R	5935-149-4072	E323
UG61B/U		2							R	5935-201-7253	FANN
UG88/U		8		P1					R	5935-149-4066	E222
UG89/U		4		P1					R	5935-149-3894	FANN
UNIT MK-8 MOD-8	330 - 30	1									
	330 - 31										
UR-12-11		3									
URF		1									
URF5	44	142							R	5325-638-5116	GH80
	71										
	88										
	274 - 2										
	334 - 17										
	335 - 29	2									
	335 - 32	6									
	335 - 51	6									
	343 - 30										
	344										
	345										
	346										
	347 - 25										
	349 - 25	6									
URF5-3	44	146									
	71										
	88										
	335	4									
	335	12									
	335	12									
URF5-7		1									
UR5		8							R	5325-336-3485	GH80
UR5-1		4		M		O					
UR9-1		1									
USB-4Y	173	1									
U12-62-500SH		1									
U12-62-503SH		1									
U81-484143-1		1									
VM102B	284 - 65	1									
VM911N-6		4									
V3-444	339 - 61	1		P1	F	O	C		R	5930-613-1355	D334
V3900	349 - 67	1									
WD6108	360 - 13	2							R	2530-288-0406	GH80
WG274AU		1									
WT-712		1									
W1034-BHR	286 - 8	1							R	5930-579-9359	D334
	299 - 27										
	299 - 28										
W1034-BHRS4R		1									
W1034-BHS4	285A- 6	1									
W1034-BHRS4R	285 - 19	1									
W11034-BHR	286 - 7	1									
W98292-1-.190		1		M		O			R	5325-281-4941	GH80
W98292-2-.170	362	2							R	5325-281-4944	GH80
W98293-2-.140	234 - 23	4							R	5325	
	235 - 23										
W99292-8-.820		1									
X-879	263	1									
	283										
XCD3-1282	185	1							R	3020-244-7299	GH80
XDM1A		1									
XP187-4-4		1									
XO2D854		2									
X105710	342A- 17	2									
X11934		1									
YAEV1C-L		1							R	5940-665-5747	D336

PART NUMBER	FIGURE AND INDEX	TOTAL QTY.	MICRO-FILM NUMBER	SOURCE CODE	INSTL CAPABILITY	RE-INSTL CAPABILITY	RECOVERABILITY	SUPPORT EQUIPMENT	COGNIZANCE CODE	FEDERAL STOCK NUMBER	MFG. CODE (TSMC)
YAEV1C-L1		3							R	5940-642-2066	D336
YAEV2C-L		2									
YAEV2C-L1		2							R	5940-204-7811	D446
YAEV25-L		4									
YAEV25A-L		1							R	5940-505-8800	D446
YAEV25C-RS		4									
YAEV26-L		2							R	5940-665-5742	D336
YAEV28-L		2									
YAEV4C-L3		1							R	5940-259-9011	D336
YAEV6CA-L2		1							R	5940-187-5160	D336
YAV1CA-L		4							R	5940-229-7536	D336
YAV1CA-L1		2							R	5940-187-5162	D336
YAV1CA-6		1									
YAV2CA-L		8							R	5940-194-4198	D336
YAV2CA-L1		15							R	5940-187-5159	D336
YAV2CA-L2		2							R	5940-194-4199	D336
YAV2CA-L3		1							R	5940-197-0607	D336
YAV2CA-6		1									
YAV25A-L		7							R	5940-230-0512	D336
YAV27A-L		5							R	5930-230-0513	D336
YAV27AL		1							R	5940-230-0513	D336
YBV2CA-L1		1							R	5940-513-3262	D336
YBV26-L		1							R	5940-156-1528	D336
YBV27A-L		1									
YBV4C-L		2									
YBV4C-L1		2							R	5940-229-7508	D336
YBV8C-T2		1							R	5940-193-7919	D336
YPV-161P2		3							R	5940-549-7706	D334
YPV-240		3									
YZ-7R017		1							R	5930-237-7387	D334
OWT-712		1									
OWT-729		1									
003-26	269A- 11	1									
01055		2									
01502051-6D		2									
01502051-8D		2									
020854B	112 - 30	2							R	5300-C06-4801	GB90
022664-021-02	104 - 56	1									
	105 - 67										
	105 - 68										
	355 -235										
	PG. 1014										
0428AF10	355 - 6	20							R	5310-596-5827	0190
	355 - 15										
	PG. 1017										
0562/AWW-1	286A- 13	1									
062156	108 - 16	1							R	1680-535-8337	X110
07-059-02		1									
08-17180F	100 - 22	4		P1	F	O	R		R	2915-601-7655	Y120
	101 - 41										
	103 -172										
	229 - 15										
08-17180F1	100 - 22	1									
	101 - 41										
	103 -172										
	229 - 15										
08-17531C		1									
08-175310	105 - 18	1		P1	F	O	R		R	2915-602-0848	Y120
	229 - 14										
08-1780F		1									
1-1	PG. 1004	6									
1-1-5000-063-12		2									
1-1003-1		1							R	1270-508-5574	B210
1-1003-1A	330 - 38	2									
1-311-1	247 - 8	1									
	247 - 11										
1-332-1	247 - 60	2		P1	F	O	C		R	5935-552-6697	V170
1-333-1	247	1		P1	F	O	C		R	5935-553-2602	V170
1-373-1	249	1									
		35		P1					R	5935-518-8167	D336
1-55844-3	355	1							R	1680-698-2685	X110
	PG. 1014										
1-55844-5	355	1							R	1680-698-2686	X110
	PG. 1014										
1-55844-7	355	1							R	1680-698-2687	X110
	PG. 1014										
1-55844-9	355	1							R	1560-568-5162	X110
	PG. 1014										
1-630-1	249	1									
		37		P1					R	5935-505-7868	V170
1-708-1	247	2		P1					R	5935-505-7869	V170
1-709-1	247	2		P1					R	5935-505-7870	V170
1-710-1		1									
1-711-1		1									
1-712-1		1									
1-713-1		1									
1-714-1	247	1		P1	F	O	C		R	5935-504-3632	V170
1-715-1		1									
1-716-1		1									
1-717-1	249	1									
		7		P1					R	5935-518-8348	D336
1-718-1	249	1									
		2		P1					R	5935-518-8229	D336
1-719-1		3		P1					R	5935-518-8228	D336
1-729-1		2		P1					R	5935-502-2523	W180
1-730-1		2		P1					R	5935	
1-734-1		4							R	5935-590-8361	V170
1-735-1		4							R	5935-590-8362	V170
1-736-1	247	1									
1-737-1	247	2		P1	F	O	C		R	5935-504-3633	V170
1-738-1	247	2		P1	F	O	C		R	5935-504-3629	V170
1-762-1	247 - 7	1							R	5935-502-8173	D336
	247 - 12										
1-806-1	247	2		P1	F	O	C		R	5935-504-3630	W180
1-807-1		1		P1					R	5935-505-7871	V170

PART NUMBER	FIGURE AND INDEX	TOTAL QTY.	MICRO-FILM NUMBER	SOURCE CODE	INSTL CAPABILITY	RE-INSTL CAPABILITY	RECOVERABILITY	SUPPORT EQUIPMENT	COGNIZANCE CODE	FEDERAL STOCK NUMBER	MFG. CODE (TSMC)
1-808-1		1		P1					R	5935-505-7872	V170
1-809-1	247	3		P1	F	O	C		R	5935-504-3634	V170
1-810-1	247	3		P1	F	O	C		R	5935-504-3629	W180
1-888-1	247	2		P1	F	O	C		R	5935-504-3685	V170
1-889-1		1		P1					R	5935-518-8097	W180
1-890-1		1		P1					R	5935-590-3865	W180
1-891-1	247	3		P1	F	O	C		R	5939-939-0203	W180
1-892-1	247	3		P1	F	O	C		R	5939-504-3684	W180
1-934-1	220 - 15	1		P1	F	O	C		R	5935-600-1944	W180
1-935-1	220 - 16	1		P1	F	O	C		R	5935-600-1945	W180
1AT5	233	1									
1AT3	231	6							R	5930-548-6088	D444
	232 - 2										
	263										
	265 - 4										
	286 - 10										
	296 - 13										
	305 - 14										
	306 - 18										
	315 - 5										
	318 - 3										
	318 - 3	1									
1D249B/ARN	315 - 54	1									
1D310/ARN-21	315 - 56	1									
	318 - 49										
1EN1-6		4							R	5930-504-9956	D334
1EN8-1	171 - 47	6							R	5930-538-6651	D444
	243 - 15										
	243 - 16										
	243 - 17										
	244 - 13										
	244 - 14										
	244 - 15										
	357										
1F1-3	PG. 1004	6									
1F3A5L	50	3									
1F3A6L		4		M		O					
1F3A6S		4		M		O					
1F3A8L		2		M		O					
1F3A8S		1		M		O					
1F6	PG. 1008	6									
	PG. 1009										
1HA1-LH	218 - 7	8							R	5930-309-4474	D334
	218 - 7										
	259 - 40										
	259 - 57										
	259 - 78										
	259 -215										
	260										
	316 - 10										
1HA1-RH	218	6							R	5930-509-8877	D334
	259 -119										
	259 -139										
	259 -191										
	259 -238										
	260 - 30										
	316										
1HS-1	230 - 8	1									
	230 - 12										
1HS1	231 - 6	3		P1					R	5930-241-8956	D334
	231 - 8										
1HS11	278 - 28	1									
1HS97	175 - 65	2		P1					R	5930-503-3929	D334
	244 - 27										
	270										
1HS6	278 - 8	2							R	5930-323-2082	D334
	278 - 23										
1J1-1A-3-12		1									
1J1-1A3-12	285 - 26	1									
1J1-1A3-30		1									
1J1-2-2-12		3		M		F					
1J1-2-2-4	227 - 23	1		M		O					
1J1-2-2-6	349 - 28	1									
1J1-2-2-7		2		M		O					
1J1-2-2-8		3		M		F					
1J1-2-3-10	284 - 54	1		M		F					
1J1-2-3-12	270 - 50	1									
	308 - 31										
	309 - 29										
1J1-2-3-14	308 - 30	1									
	309 - 28										
1J1-2-3-4		1		M		F					
1J1-2-3-5	284 - 53	1		M		F					
1J1-2-3-6		1		M		F					
1J1-2-3-9	227 - 22	1		M		O					
1J1-2-4-12		2		M		F					
1J1-3-3-12	285 - 27	1									
1J1-3-3-30	227 - 24	1		M		O					
1J1-3-3-44		1									
1J1-3-3-46		1		M		F					
1J1-3-3-50	299	1									
1J1-3-3-64	301 - 46	1		M		F					
1J1-3-66	306 - 41	1									
1L1		1							R	5310-535-5519	ANAA
1L1-2		1							R	5310	
1N184	172 - 61	1									
	172 - 88	1									
	172 - 92	1									
	172 -103	1									
	172 -110	1									
	172 -113	1									
	173 - 64										
1N1C3	356 - 14	6		P1	F	O	C		R	5310-167-1279	G1AN
	356 - 21										
1N6-15	147 - 18	3		P							

PART NUMBER	FIGURE AND INDEX	TOTAL QTY.	MICRO-FILM NUMBER	MAINTENANCE CODE DATA: SOURCE CODE	INSTL CAPABILITY	PRE-INSTL CAPABILITY	RECOVERABILITY	SUPPORT EQUIPMENT	FEDERAL STOCK NUMBER DATA: COGNIZANCE CODE	FEDERAL STOCK NUMBER	MFG. CODE (TSMC)
1N6-17	142 - 25	42		P	F	O	C		R	5310-215-7624	G190
1N6-17A	142	4		P	F	O	C		R	5310-637-0186	G190
1N6-18A	175 - 34	1									
1N6-19A	158	2							R	5310-638-1147	G190
	159										
1N6-20A	175 - 11	1									
1N6-22	141 - 53	2		P	F	O	C		R	5310	
	168 - 11										
1N6-25	146 - 16	4		P	F	O	C		R	5310	
1N6-30	143 - 26	6		P	F	O	C		R	5310-094-6539	ANAA
1N6-34	157 - 1	1							R	5310-094-6540	ANAA
1N6-38	166 - 22	2		P	F	O	C				
	167 - 7										
1N6-40	145 - 27	2		P	F	O	C		R	5300-C00-1367	G190
1N6-42	84 - 16	2		P	F	O	C		R	5300-C00-1368	G190
	84 - 26										
1N6-42A	131 - 4	1		P	F	O	C				
1N6-56	84 - 39	2		P	F	O	C		R	5310-639-3041	ANAA
	84 - 55										
1N7-10A	193 - 48	2		P	F	O	C		R	5310-275-3627	G190
1N7-11A	81 - 7	2		P	F	O	C				
	157 - 12										
	166 - 9										
	167 - 4										
1N7-12A	84 - 32	2		P	F	O	C		R	5310-637-8829	G190
	145 - 9										
1N7-13A	84 - 4	1		P	F	O	C				
1N7-15A	131 - 26	1		P	F	O	C		R	5310	
1N7-16A	128 - 5	2		P	F	O	C				
1N7-4	59A- 12	2		P	F	O	C		R	5310-208-5409	
	195	2									
1N7-4A	19 - 62										
	80										
	16 - 27	29		P	F	O	C		R	5310-281-2409	G190
	18 - 21										
	18 - 51										
	18 - 70										
	18 - 90										
	128 - 97										
	131 - 43										
	138 - 44										
	184 - 25	1									
1N7-4LA	19 - 65	6		P	F	O	C		R	5310-208-5273	G190
1N7-5	193 - 42	2									
1N7-5A	92	17		P	F	O	C				
	128 - 85										
	141 - 48										
	146 - 2										
	147 - 6										
	163										
	175 - 9										
	175 - 25										
	177 - 4										
	180 - 16										
1N7-5LA	128 - 85	3		P	F	O	C		R	5310-208-5411	G190
	182 - 38										
	183 - 39										
	198 -119										
	198 -157										
1N7-51A	176 - 52	1									
1N7-6A	21	17		P	F	O	C		R	5300-C00-1251	G190
	81 - 10										
	161 - 9										
	166 - 14										
	172 - 66	1									
	172 - 83	2									
	174 - 14										
	174 - 22										
	176 - 85										
	177 - 7										
	180										
	328 - 51										
1N7-6LA	172 - 11	1									
	174 - 20										
	180										
1N7-7A	145 - 28	2		P	F	O	C		R	5310-281-1218	G1AN
	176 -105										
	176 -113										
	176 -121										
1N7-7L	176 -109	1									
	176 -124										
1N7-8A	117 - 7	1		P	F	O	C		R	5310-297-8901	ANAA
1N7-9A	138 - 24	1									
	175 - 38										
1N8-3		7									
1N8-5	355	12		P1	F	O	C		R	5310-208-3144	G190
	PG. 1014										
1PG11MF-1900		1							R	6685-553-4686	YGCO
1P65	206 - 19	1							R	1650-219-1908	ANAA
1P7	155	8		M		O					
	179 - 24										
	180 - 34										
	180 -163										
	182										
	183										
	191 - 29										
	192 - 7										
1P8	128 -104	45		M		O					
	131 - 40										
	138 - 68										
	155 - 3										
1R11-6-35-524	204 - 62	2									
	PG. 1016										
	PG. 1024										
1R11-6-49-1032		1									

PART NUMBER	FIGURE AND INDEX	TOTAL QTY.	MICRO-FILM NUMBER	MAINTENANCE CODE DATA: SOURCE CODE	INSTL CAPABILITY	PRE-INSTL CAPABILITY	RECOVERABILITY	SUPPORT EQUIPMENT	FEDERAL STOCK NUMBER DATA: COGNIZANCE CODE	FEDERAL STOCK NUMBER	MFG. CODE (TSMC)
1R11-6-49-428	42 - 39	1		P	O	O	C				
1R12-10-035-524	182	2		P	F	O	C		R	5340-663-0414	ANAA
	183										
	198										
1R12-10-35-524L	198	1									
1R12-10-65-524	189 - 36	2									
1R12-6-35-524	186	6		P	F	O	C				
1R12-6-49-524		1									
1R12-8-.035-524	180	2									
1R12-8-35-524		2		P	F	O	C				
1R12P12-49-524	181	1									
1SM1		2									
1T15-10-19-1	PG. 1005	3									
	PG. 1005										
1V4-12-30		1							R	1650-031-5625	ANAA
1V4-20-30	142	3		P1					R	1650-373-7889	ANAA
	149 - 8										
	159 - 39										
1V4-44-30	153 - 16	1		P1					R	1650-316-4870	ANAA
1V4-5-30	143 - 72	6		P1					R	1650-568-5333	ANAA
	158 - 17										
	159 - 6										
1V7-12-30	158 - 8	1							R	1650-613-1382	ANAA
	159 - 9										
1V7-20-30	152 - 16	1		P1	F	O	C		R	1650-373-7892	ANAA
1V7-23-30	142 - 10	2		P1					R	4730-562-8354	ANAA
1V7-4-30	164 - 66	2		P1	F	O	R		R	4730-516-4395	ANAA
	164 -115										
	165 - 40										
	357										
1V7-5-30	164 - 70	2		P					R	4730-529-3886	ANAA
	164 -116										
	357										
10	61 - 20	1									
10-1006	126 - 66	3		P1					R	1650-511-2079	Y120
	127 - 83										
10-1303-235130	56	1									
	272 - 5										
10-1744-79		1							R	1650-486-2681	
10-33035-1		1									
10-41812-51P		1							R	5935-283-1465	D336
10-4465		1									
10-51018	164	4							R	2925-090-4791	Z150
10-51019	143 - 50	6							R	4730-303-8197	G260
	145 - 5										
10-51022		2							R	4700-C00-4197	G260
10-51060	219 - 48	1							R	4730-573-5798	G250
	357										
10-51061	219 - 47	1							R	4730-560-8211	G250
	357										
10-83-35-1		1									
10-83035-1	PG. 1014	1							R	5935-098-5037	X110
	PG. 1023										
10-83040-1	355 -128	1							R	2925-098-4118	NSNT
	PG. 1014										
	PG. 1023										
10-89035-1	355 -164	1									
10A	61 - 18	1									
10AN	61 - 19	1									
10B1-3-3-3		7		M		F					
10B1-3-3-4	71 - 26	1									
10B1-3-3-5	94	2		M		F			R	6150-186-3997	D336
10B1-3-3-6	45 - 28										
	9 - 13	2		M		F					
10B1-3-4-4		3		M		F					
10B1-3-4-7	25 - 9	4		M		F			R	6150-325-9343	D446
10B1-4-3-3	18 - 94	12									
10B1-4-3-4	44 -141	1									
10B1-4-4-5	68 - 24	1		M		F					
10B2-3-3-4		1									
10B2-3-3-7		1									
10C-2813-1		1									
10C1-1-10		1		M		O					
10C1-1-4		1		M		O					
10C1-1-5		1		M		O					
10C1-1-7		1		M		O					
10C1-2-10		1		M		O					
10C1-2-14		3		M		O					
10C1-2-26		3		M		O					
10C1-2-5		1		M		F					
10C1-3-9		1		M		F					
10C2A14-3		1		M		F					
10C2A15-59		1		M		F					
10C2A3F16		1		M		F					
10C2A4F16		1		M		F					
10C2A6-221/4		1		M		O					
10C2A6-30 3/4		1		M		O					
10C2A8-12		1		M		O					
10C2A8-18		3									
10C2A8-19		1									
10C2A8-20-1/2		1									
10C2A8-21-3/4		1									
10C2A8-22		1									
10C2A8-25-1/2		1		M		F					
10C2B-12-2		30									
10C2B-7-11-1/2		1									
10C2B-7-12-1/2		1									
10C2B-7-58		2		M		F					
10C2B11-171		1		M		O					
10C2B11-39-1/2		1		M		O					
10C2B12-4		1		M		O					
10C2B12-5	269A- 37	1									
10C2B12-8	39 - 99	1									
10C2B13-1	98 - 82	3		M		F					
	99 -115										

PART NUMBER	FIGURE AND INDEX	TOTAL QTY.	MICRO-FILM NUMBER	MAINTENANCE CODE DATA: SOURCE CODE	INST'L CAPABILITY	PRE-INST'L CAPABILITY	RECOVERABILITY	SUPPORT EQUIPMENT	FEDERAL STOCK NUMBER DATA: COGNIZANCE CODE	FEDERAL STOCK NUMBER	MFG. CODE (TSMC)
	100 -217										
	358										
10C2B13-1-3/4	107 - 91	1		M		F					
10C2B13-86		1		M		O					
10C2B15-7-1/2	357	2									
10C2B15-71/2		1		M		O					
10C2B16-20		1									
10C2B16-25		1		M		F					
10C2B21-12		1		M		F					
10C2B4-6		1		M		F					
10C2B6-7		1		M		F					
10C2B8-8		1		M		F					
10C2B8-9		1		M		F					
10C2B9-165		2		M		O					
10C2D10-4		1		M		F					
10C2D11-12		1		M		F					
10C2D11-40		1		M		F					
10C2D13-16		1		M		F					
10C2D13-8-1/2		2		M		F					
10C2D14-8		1		M		F					
10C2D20-150		1									
10C2D20-170		1									
10C2D20-72		1		M		O					
10C2D7-16		1		M		F					
10C2D8-10		1		M		F					
10C2D8-16		1		M		F					
10C2D8-6		1		M		F					
10C2D8-9-1/2		1		M		F					
10C2D9-5		1		M		F					
10C2E10-75		1		M		F					
10C2E14-16		1									
10C2E6-75		1		M		F					
10C2E8-7		1									
10C2E9-1		13		M		O					
10C2E9-15		2		M		F					
10C2E9-18		4		M		O					
10C2E9-20		1		M		O					
10C2E9-21		1		M		O					
10C2E9-26		1									
10C2E9-28-1/2		1									
10C2E9-37-1/2		2									
10C2A8-128	PG. 1010	1									
10C3-18		1		M		O					
100315	PG. 1006	1							R	1740-589-7082	5030
100628A	364 - 52	1							R	1740-565-3887	5030
	365 - 53										
	PG. 1007										
100882	362 - 41	4									
	364 - 51										
	365 - 4										
	365 - 41										
10094	269	1									
101232	PG. 1014										
	PG. 1023										
	351 - 8	1							R	2925-547-9524	X110
101234	PG. 1013	1							R	2925-547-9525	X110
102		1									
102R		1									
102052-7	232 - 5	1							R	1660-376-6649	YAIR
	350 - 54										
10212-200	230 - 20	1		P1	F	O	C		R	4820-031-5358	Y120
	351 - 96										
10232		1									
102372A		1									
102536		1									
102842AG		1									
102913AZ		2									
102987B		1									
103TTR		1		P1							
10300	318 - 72	1									
103008	317 - 24	1									
104200-2	223 - 41	1							R	4820-031-5588	Y120
	295 - 31										
104232-1	231 - 21	1							R	1680-376-2836	YAIR
	351 - 16										
104260	231 - 19	1							R	1660-533-0700	YAIR
	351 - 29										
104465	124 - 54	3		P1					R	1650-349-5299	YWTK
	126 - 66										
	127 - 85										
	152 - 28										
104685	231 - 18	3							R	4820-562-8363	YWTK
	232 - 4										
	350 - 16										
	350 - 65										
	351 - 31										
1048	241	1							R	1650-094-9032	Y120
									R	4510-174-4648 OR	GH80
1048RP-11		1									
105		1									
	120	1									
105713-01	253 - 5	1									
105716-01	253 - 6	1									
105759-01	253 - 4	1									
	315 - 85										
	318 - 46										
106TTR	86	1							R	1680-694-8207	B210
106130	123 - 51	1									
106130-3	124 - 47	4							R	5930-296-6898	V170
	126 - 44										
	127 - 44										
	245 - 6										
	245 - 7										
	245 - 9										

PART NUMBER	FIGURE AND INDEX	TOTAL QTY.	MICRO-FILM NUMBER	MAINTENANCE CODE DATA: SOURCE CODE	INST'L CAPABILITY	PRE-INST'L CAPABILITY	RECOVERABILITY	SUPPORT EQUIPMENT	FEDERAL STOCK NUMBER DATA: COGNIZANCE CODE	FEDERAL STOCK NUMBER	MFG. CODE (TSMC)
	245 - 11										
	288 - 11										
	288 - 12										
106130-9	123 - 52	1		P1	F	O	S		R	5930-504-8666	V170
	245 - 8										
	245 - 10										
	288 - 13										
10692-1		1							R	1000-C00-3377	B210
10692-2		1							R	1005-569-5401	B210
106363	251 - 33	2							R	1650-516-3452	YWTK
10682A		1							R	5930-396-0005	D444
10682A-200	218 - 6	1							R	5930-644-3019	D334
	224 - 3										
	234 - 64										
	235 - 69										
	251 - 8										
	259 -271										
	260 - 8										
	261 - 4										
	274 - 9										
	280 - 2										
1083-SK		1							R	9905-205-1606	V170
108855		1							R	2915-202-8715	YWTK
109-58824- 41	142	1									
109T8-TP		1									
10916-1		1									
10916-2		1									
11-11200		1									
11-56923-13	355	1		P1	F	O	C		R	1680-614-0636	X110
	PG. 1014										
11-56923-15	355	1		P1	F	O	S		R	1560-613-9477	X110
	PG. 1014										
11B-0343-1	328 - 20	1		P1	F	O	S		R	1005-513-6026	B210
11B-0343-2	328	1		P1	F	O	S		R	1005-513-6027	B210
11B-0344-1	328 - 21	1		P1	F	O	S		R	1005-513-6028	B210
11B-0344-2	328	1		P1	F	O	S		R	1005-513-6029	B210
11C1-0800		2		M		F					
11C1-1208		2									
11C1-700		1									
11S1	234	1		M		O					
	235										
110-1 4	26 - 55	2									
110-1/4	26 - 55	4							R	5930-506-1659	D444
110085	93 - 8	1		P1					R	2915-098-3542	YWTK
	291 - 8										
1101-SCK-5/8		1									
110235		1							R	1600-C02-1974	YWTK
11030	141 - 2	1		P1					R	1650-031-5618	Y120
	259 -272										
11070	153 - 1	5		P1					R	4820-031-5619	Y120
	154 - 1										
	158 - 1										
	159 - 1										
	164										
	165										
	251 - 32										
	278 - 5										
	292 - 8										
11077-1	328 - 18	1		P1					R	1005-344-0174	B210
11077-2	328	1		P1					R	1005-344-0175	B210
11081-1	328 - 19	1							R	1005-694-9251	B210
11081-2	328	1							R	1005-694-9252	B210
11082-1	328 - 19	1							R	1005-694-9253	B210
11082-2	328	1							R	1005-694-9254	B210
11083-1	328 - 19	1							R	1005-513-6024	B210
11083-2	328	1							R	1005-513-6025	B210
11086-1		1									
11086-2		1									
11101	274 - 10	1							R	5930-398-3749	D334
11109	354 - 5	1									
1111-516112		1									
1111-517703	94 -171	1		P1	F	O	S		R	4820-595-0062	G250
	94 -182										
1111-517706	116 - 74	6							R	4820-595-4423	G260
1111-517708	95 - 73	1							R	4820-287-2247	G250
	97 - 74										
1111-518038	98 - 64	11		P1	F	O	C		R	4820-376-8711	YPAC
	99 - 89										
	100 -192										
1111-518110		1									
1111-518111		1									
1111-518112	95 -132	1		P1	F	O	C		R	2915-098-3535	Y120
	97 -133										
1111-518133	96 - 49	2		P1					R	2915-098-3536	Y120
	102 -149										
	103 -141										
1111-518115		1									
1111-526657		1							R	4820-376-6712	YPAC
1111-543062		1							R	2915-287-4985	Y120
1111-548062	101 - 26	1		P1					R	2915-287-4985	Y120
	110 - 13										
1111-548180	99	3		P1	F	O	C		R	2915-098-3529	Y120
	107 - 15										
1111-548392		1									
1111-548382	98 -119	11		P1	F	O	C		R	2915-535-8356	YPAC
	99 -132										
	99 -149										
	100 -167										
	106 - 6										
1111-548602		1									
1111-558117		1									
1111-558177	338 - 41	1							R	1650-511-6097	YPAC
	339 - 23										
1111-565153	116 - 69	2		P1	F	O	C		R	2915-606-6531	YPAC
1111-565455	100 - 11	1		P1	F	O	S		R	2915-575-9350	YPAC

PART NUMBER	FIGURE AND INDEX	TOTAL QTY.	MICRO-FILM NUMBER	MAINTENANCE CODE DATA: SOURCE CODE	INSTL CAPABILITY	MIL-INSTL CAPABILITY	RECOVERABILITY	SUPPORT EQUIPMENT	FEDERAL STOCK NUMBER DATA: COGNIZANCE CODE	FEDERAL STOCK NUMBER	MFG. CODE (TSMC)
	105 - 66										
1111-569844		1		P1	F	O	S		R	2915-606-6530	YPAC
1111-569845		1							R	2915-606-3310	YPAC
1111-58180	98 - 98	1									
111465	93 - 73	1		P1	F	O	S		R	2915-202-6093	YWTK
	281 - 13										
11175		1									
111865	112 - 16	1		P1	F	O	R		R	2915-305-4544	YWTK
	195 - 56										
111875	112	1							R	2915-511-8312	YWTK
	195										
11213-2	205	1		P1					R	2995-511-3543	X110
1129729		4									
11241	355 - 97	1		P1					R	5940-325-9186	D446
	PG. 1014										
	PG. 1023										
11242	355 - 96	1		P1					R	5940-330-5837	D446
	PG. 1014										
	PG. 1023										
11242-2		1									
11243	355 - 98	1		P1					R	5940-330-5837	D446
	PG. 1014										
	PG. 1023										
									R	5940-325-9187 OR	D446
1128-06	269A- 13	6									
	284 - 33										
113050-2	139 - 3	1		P1					R	1650-211-5094	Y120
113195	251 - 34	4							R	1650-540-1294	YWTK
	321 - 21										
	322										
11377	321 - 49	1							R	1650-541-0837	Y120
	327 - 16										
114-J-100-1	125 -120	1									
	129 - 18	1									
114-J-100-2	125 -123	1									
	129	1									
1141427		2									
1141446		2									
11465		1							R	5840-323-0284	FARC
115AT-17		1		P1	F	O	C		R	5930-600-1966	D334
115AT1	229 - 2	1		P1	F	O	C		R	5930-575-9361	D334
	301 - 21										
115AT15	244 - 4	1									
115AT17	244 - 4	1		P1	F	O	C		R	5930-600-1966	D334
115AT18	244 - 4	1		P1	F	O	C		R	5930-608-8133	D334
115AT19	229 - 2	1		P1	F	O	C		R	5930-607-8134	D334
	301 - 21										
116380-01	253 - 7	1							R	6615-562-5791	V170
116465	195 -106	1							R	1660-516-3483	YWTK
1165-06CNX-.250	105	2									
117B200	321 - 71	1		P1	F	O	S		R	1650-620-3207	Y120
117235	93 - 73	1		P1	F	O	S		R	1650-546-3955	YWTK
	94 - 68										
	94 -115										
	94 -172										
	229 - 11										
	229 - 12										
	250 - 23										
	281 - 13										
118A8	188 - 37	1		P1					R	6615-303-6836	VDAP
	188 - 37	1									
	293 - 22										
	358										
1180343-1		1									
1180343-2		1									
1180344-1		1									
1180344-2		1									
11816	221 - 22	1		P1	F	O	R		R	6615-564-6668	VCGR
1185-06CNX.207	264 - 43	4									
1185-06CNX-.207	96	30									
	97										
	98										
	100										
	102										
	103										
	104	2									
	104	2									
	105										
	110										
	264 - 19	4									
1185-06CNX-.250	104	2									
1185-06CNX-.276	93	24									
	94										
	95										
	96										
	97										
1185-06CNX-.281	102	10									
	103										
1185-06CNX-276	94	4									
1185-24CNX-1/-1/8	338 - 86	1									
1185-24CNX-1-1/8	339 -115	1									
		1									
1185-24CNX-7/8	338 - 87	3									
1185-24CNX7/8	336 - 13	2									
	339 -116	1									
1185-6CNX-.563	104	1									
	105										
11865		2									
1191-CNX-3/4	171 - 61	1									
1191-10CNX-1-11/16		2									
1191-10CNX-1-3/32		4									
1191-10CNX-15/16	16 -120	2									
1191-12CNX-1-1/8		1									
1191-12CNX-15/16		3									

PART NUMBER	FIGURE AND INDEX	TOTAL QTY.	MICRO-FILM NUMBER	MAINTENANCE CODE DATA: SOURCE CODE	INSTL CAPABILITY	MIL-INSTL CAPABILITY	RECOVERABILITY	SUPPORT EQUIPMENT	FEDERAL STOCK NUMBER DATA: COGNIZANCE CODE	FEDERAL STOCK NUMBER	MFG. CODE (TSMC)
1191-12CNX-3/4	335 - 85	4									
1191-18CNX-1-1/8	340 - 41	1									
1191-20CNX-.625	98	2									
	99										
1191-20CNX-19/32		2									
1191-20CNX-5/8		2									
1191-3CNX.190	264 - 44	3									
1191-3CNX-.190	264 - 20	3									
1191-3CNX-.281		15									
1191-3CNX-.285	96	30									
	100										
	101										
	102										
	103										
	110										
1191-3CNX-.380	95	12									
	96										
	97										
	98										
	102										
1191-3CNX-.475	18	15									
1191-3CNX-.570	266 - 24	2									
1191-3CNX-13/32		3									
1191-3CNX-15/32		10									
1191-3CNX-3/8	29	12							R	5340-290-4480	G192
	121										
1191-3CNX-9/32		8									
1191-4CNX-1/2	18	26							R	5340-290-4497	G192
	99										
	189										
	247										
1191-4CNX-1/4	20 - 20										
	20 - 29										
	20 - 41										
	80 - 49										
	18 - 58	80							R	5340-286-6600	G192
	18 - 79										
1191-4CNX-3/4	171 - 26	8							R	5340-290-4501	G192
	171 - 42										
	171 - 61										
	171 - 80										
	171 - 95										
1191-4CNX-3/8	20 - 39	76							R	5340-291-3484	G192
	21										
	24 - 7										
	48										
	113										
	131										
	176 - 37										
1191-4CNX-5/16	16	4									
1191-4CNX-5/8	18	2							R	5340-290-4502	G192
	171 - 52										
1191-4CNX-7/8		2									
1191-4CNX1/4	20 - 20	5									
1191-4CX1/2	98	8									
1191-5C-5/8	16	1									
1191-5CNX-25/32	171 - 33	1									
1191-5CNX-5/8	171 - 68	1									
1191-6CNX-3/8	45										
	16	2							R	5340-291-3493	G192
1191-6CNX-9/16	16	2							R	5340-291-3492	G192
1191-7CNX-21/32	16 - 12	2							R	5340-634-7860	G192
1191-7CNX-7/16	45										
	16	2									
1191-8CNX-3/4	69 - 29										
	16 - 20	10							R	5340-291-3488	G192
	16 -136										
	16 -227										
1191-9CNX-27/32	16 - 95	6							R	5340-291-3487	G192
	16 -107										
	16 -208										
	16 -217										
	16 -221										
1191X3CNX.570		2									
11940	150 - 3	1							R	4810-562-5319	Y120
	150 - 9										
	170 - 3										
	218 - 18										
	259 -273										
119525	93 - 6	1		P1					R	2915-595-3737	YWTK
	94 - 2										
11995	284A- 18	1									
12-160		1							R	9535-596-3286	G480
12-557	98	3		P1	F	O	C		R	2900-C01-3739	ZPED
	99										
	105										
	249										
	358										
12LHA1-048		17		P1	F	O	C		R	5310-275-4314	G1AN
12LHA17-02		6									
12LHA5-02		110							R	5310-638-9419	G190
12LHA5-048		1							R	5310-638-9421	G190
12LH5-02	35	1									
1251	361 - 25	9									
	PG. 1003										
	PG. 1004										
	PG. 1010										
1251-45		1									
1252	58 -163	15		M		F					
	58 -170										
	58 -171										
	63 - 43										
	63 - 51										
	63 - 54										
	PG. 1003										

PART NUMBER	FIGURE AND INDEX	TOTAL QTY.	MACRO-FILM NUMBER	MAINTENANCE CODE DATA: SOURCE CODE	INSTL. CAPABILITY	PRE-INSTL. CAPABILITY	RECOVERABILITY	SUPPORT EQUIPMENT	FEDERAL STOCK NUMBER DATA: COGNIZANCE CODE	FEDERAL STOCK NUMBER	MFG. CODE (TSMC)
	PG. 1005										
	117 - 45										
12545	PG. 1005	1									
12Z-3010-464		2									
120-33144	38 - 10	3		P1	0	0	C		R	1560-448-6086	ANAA
	38 - 18										
	68 - 1										
120-33144- 2		3		X1							
120-33144- 3		3		X1							
120-33548		1		M		0					
120-33548- 2		1		M		0					
120-33548- 5		1									
120-33548- 10	200 - 1	1									
12000	153 - 1	1		P1					R	1650-696-3710	A120
	154 - 1										
	158 - 1										
	159 - 1										
	165										
	251 - 31										
	292 - 8										
1206-001A	197 - 30	1		P1					R	1680-508-2739	X110
120665	93 - 6	1							R	1650-562-8369	YWTK
	94 - 2										
1207-001	181 - 52	4							R	4030-300-3664	X110
	182 - 1										
	183 - 1										
1209-001	184 -152	2									
	185 -112										
	188 - 1										
	189 - 1										
121002	4	6							R	5920-177-1694	E212
1211-517115	93	2		M		0			R	5315-598-8202	NPAC
	94										
	95										
	97										
1211-517246	93	2		P1	F	0	C		R	2915-331-6771	YPAC
	94										
	95										
	97										
1212-5	163	1							R	4730-535-9564	GH80
1212-7	163	1							R	4730-535-9565	GH80
1216		2							R	4730-535-9568	GH80
1216-1	163 - 99	2							R	4730-535-9566	GH80
122195-010-01		1									
122220-001		1									
1226365-1		1							R	6605-224-9910	VAHO
122637-220	358	3									
122637-220-01		3		P1							
122637-220-04	98	3		P1	F	0	R		R	2915-613-9597	ZPED
	99										
	105										
	249										
122637-221-01		1							R	2915-640-1012	ZPED
122637-221-02	98	3							R	2915-541-4124	ZPED
	99										
	105										
	249										
122637-221-04		2							R	2915	
1226998-1		1									
122901-010-01	108 - 1	1							R	2915-587-8792	ZPED
122913-010-01	107	1		P1	F	0	R				
	249 - 16										
122913-010-02	107 - 1	1		P1	F	0	R		R	2915-595-0011	ZPED
	249										
	250 - 20										
1292885-1		1							R	6605-524-9986	VAMP
12555-1A	122	1		P1					R	5841-318-8337	F733
	212										
12555-14		1									
1260	118 - 3	2							R	5340-390-7942	GH80
									R	6250-295-1155 OR	D336
									R	4730-595-3557 OR	Y120
12808		6		P1							
1287111	328 - 7	8									
12954	394 - 11	1							R	2910-373-8637	ZCMA
129665		1									
13-21280-13	355	1									
	PG. 1014										
13-21280-15	355	1									
	PG. 1014										
13-21280-17	355	1									
	PG. 1014										
13-21280-19	355	1									
	PG. 1014										
13-21280-3	355	1							R	1680-037-2845	X110
	PG. 1014										
13-21280-5	355	1							R	1680-037-2846	X110
	PG. 1014										
13-21280-7	355	1							R	1680-037-2847	X110
	PG. 1014										
13-21280-9	355	1							R	1680-037-2848	X110
	PG. 1014										
13-21455-9		1									
13-21495-13	355	1									
	PG. 1014										
13-21495-15	355	1									
	PG. 1014										
13-21495-3	355	2							R	1680-037-2849	X110
	PG. 1014										
13-21495-5	355	1							P	1680-037-2850	X110
	PG. 1014										
13-21571-13	355	1									
	PG. 1014										
13-21571-15	355	1									
	PG. 1014										
13-21571-3	355	1		P1					R	1680-698-2683	X110
	PG. 1014										
13-21571-5	355	1		P1					R	1680-698-2684	X110
	PG. 1014										
13-21754-13	355	1									
	PG. 1014										
13-21754-15	355	1							R	1680-569-2754	X110
	PG. 1014										
13-21754-17	355	1							R	1680-569-2755	X110
	PG. 1015										
13-21754-19	355	1									
	PG. 1015										
13-21754-3	355	1							R	1680-698-2685	X110
	PG. 1015										
13-21754-5	355	1		P1					R	1680-698-2686	X110
	PG. 1015										
13-21754-7	355	1							R	1680-698-2687	X110
	PG. 1015										
13-21754-9	355	1							R	1560-568-5162	X110
	PG. 1015										
13-21835-3		1							R	1680-694-2228	
13-21835-5		1							R	1680-694-2227	
13A003M	121 - 15	1									
130-R-0300-8	218 - 19	1							R	1650-511-9549	YCNL
	325 - 49										
130-53446- 3	351	1		M		0					
130-53447- 3	351 - 71	1	CR245	M		0					
130-53448- 3	351	1	CR 98	M		F					
130-53455- 3		1		A		F					
130-53455- 7		1		M		F					
130-53455- 9		1		M		F					
130-53456	351 - 72	1	CR 99	M		F					
130-53456- 3		1	CR 99	M		F					
130-53456- 5		1	CR 99	M		F					
130R0300-8		1							R	1650-511-9549	YCNL
1309.126	122	1							R	5985-338-1119	E212
	212										
1311	65 - 16	1		P1					R	1650-098-2196	Y120
	85 - 77	1									
	151 - 1										
13155		1									
1318106		3									
1325-556659		1									
1328-547069		1									
134-31325		1									
134-31908	48	2	CR 75	P					R	1560-375-6433	ANAA
134-31916	351	1	CP114	P	P	0	C		R	1560-339-9778	ANAA
134-31925	48	1	BR 59								
134-48331	118 - 7	1		P1	F	0	C		R	1640-437-9891	ANAA
134-48332		2	CO 47	P3	F	0	C		R	5330-268-7369	ANAA
134-73313- 3		1	DN147								
134-73313- 11		1	DN147								
13405		8									
135-D-100-3	323 - 16	1		P1	F	0	R		R	1650-094-8696	YCNL
135-D-100-4	321 - 6	1		P1					R	1650-546-3920	YCNL
135-D100-3		1							R	1650-094-8696	YCNL
135-D100-4		1							R	1600-C02-1055	YCNL
1354-526177	93 - 90	2							R	4820-037-2951	YPAC
	94 -152										
	94 -160										
135880	355	1									
	PG. 1015										
135897	355 - 30	1							R	2995-698-0525	N140
	PG. 1015										
1371-569460		1		P1	F	0	R		R	1650-606-6332	YPAC
13741-2-A		1							R	6625-590-8702	TECP
13741-2A	PG. 1012	1							R	6625-590-8702	TECP
1375-559606	126 - 66	1									
	127 - 83										
13755-1A	PG. 1012	1							R	6625-590-8710	TECP
13798	394 - 12	1							R	5845-526-2200	F541
									R	5305-639-2908 OR	ZECP
13799	394 - 14	1							R	5305-637-8303	ZECP
138-10	27 - 19	6									
138106	209 - 40	1							R	5930-240-4202	D334
	213										
									R	5120-094-4144 OR	ALHA
13827-1-A		1							R	6625-590-8748	TECP
1383		1									
13839-1A	PG. 1012	1							R	6625-544-5491	T030
1385	256	2							R	5340-286-4084	G890
138604	263	2							R	5930-323-2138	D444
	315 - 8										
13866-1A	PG. 1012	1							R	6625-544-5492	T030
13939	394 - 6	1							R	2810-048-6232	PALM
13948	394 - 10	1									
13949	394 - 7	1									
14-1082	158 - 1	3		P1					R	1650-288-8129	Y120
	159 - 1										
14-1086	150 - 3	1							R	1600-C02-1584	Y120
	150 - 9										
	170 - 3										
	218 - 18										
	259 -273										
14P81	225 - 78	1							R	5930-296-4847	D334
	234										
	235										
	245 - 3										
	247										
	260 - 32										
	262 - 4										

PART NUMBER	FIGURE AND INDEX	TOTAL QTY.	MICRO-FILM NUMBER	MAINTENANCE CODE DATA: SOURCE CODE	INST'L CAPABILITY	PRE-INST'L CAPABILITY	RECOVERABILITY	SUPPORT EQUIPMENT	FEDERAL STOCK NUMBER DATA: COGNIZANCE CODE	FEDERAL STOCK NUMBER	MFG. CODE (TSMC)
	267 - 4										
	291 - 3										
	305 - 13										
	306 - 17										
140-B-1100	321 - 40	1							R	4820-032-7661	YCNL
	322 - 39										
	326 - 3										
140-B-3100	321 - 40	1							R	1650-288-8048	YCNL
	326 - 3										
140-31020- 11	42 - 24	1									
140-31029- 11		4		A		F					
140-31030- 3	35 - 74	8	CR104	P	F	0	C		R	1650-544-8405	ANAA
	42 - 27										
140-31049- 3	35 - 73	8	CR105	P	F	0	C		R	1560-526-1305	ANAA
	42 - 26										
140-31050	42 - 25	4	CR106	P	F	0	C		R	1560-329-0104	ANAA
140-31878	53 - 45	1	CR107	M		0					
140-31878- 3		1	CR107	M		0					
140-31878- 5		1	CR107	M		0					
140-31935	48 - 5	1									
140-31936	48 - 1	1	CR108								
140-31936- 5	48 - 3	1	CR108								
140-42047	48 - 9	1	CU 93	P	F	0	C		R	5306-033-4477	G190
140-52102	179 - 14	1	CR 94	P	F	0	S		R	1560-047-9807	ANAA
140-52301		1	AS104	A		F					
140-52302	175 - 30	1		P1					R	1560-373-6435	ANAA
	180 - 13										
140-52302- 3	180	1		M		0					
140-52303	175 - 32	1	CR109	M		0					
	180 - 9										
140-52307- 3	180	1	CR110	M		0					
140-52308	180	1	CU 95	M		0					
140-52309- 5	180	1	CU 96	M		0					
140-52309- 7		1	CU 96	M		0					
140-52392		1									
140-52425	71	1		M		0					
140-54160		9	CR111	M		0					
140-54160- 3		6	CR111	M		0					
140-54160- 5		1	CR111	M		0					
140-54160- 21		1	CR111	M		0					
141082	251 - 31	1									
142-33139	38	1		P1	F	0	C		R	1560-223-2696	ANAA
142-33139- 3		2		X1							
142-33139- 4		2		X1							
144-71050		1	CU103	M		0					
144-71051		1	CU104	M		0					
144-71054		1	CU105	M		0					
144-71056	53 - 39	1	AS 97	P	F	0	C		R	1650-535-5520	ANAA
144-71059- 5	53 - 38	1	CU106	P	F	0	S		R	5821-185-7468	ANAA
144-71059- 6		1	CU106	M		0					
144-71062		1	CU107	M		0					
144000-1	320	12							R	4730-573-3058	Y120
	322										
144000-6	328 - 28	12		P1					R	4730-516-3180	Y120
	328 - 29										
14460	262 - 11	1		P1	F	0	R		R	1660-564-5519	Y120
	352 - 1										
	354										
1452-048		2									
1452-054	76 - 30	2							R	5310-174-7419	G190
1452-070	116 - 28	1							R	5310-174-7421	G190
1452-098	334 -159	8									
1452-108	141	2							R	5310-174-7428	G190
146-22403		1							R	1560-145-3475	ANAA
146-33149	PG. 1003	1									
	PG. 1004										
	PG. 1010										
146-47424	355 -190	1		M		0			R	1560-663-1584	ANAA
	355 -206										
	PG. 1016										
	PG. 1018										
	PG. 1024										
146-51547	240 - 19	1	BZ100	M		F					
14740	262 - 8	1		P1	F	0	R		R	6680-515-4748	VJAM
14746	262 - 10	1							R	6680-535-9936	VAHN
14790	352 - 15	1		P1	F	0	C		R	1660-541-1062	Y120
1495		1							R	5340-091-1643	GH80
15-3500		1							R	2915-202-8713	Y120
15-7300-3	100 -129	1		P1					R	2915-695-3358	Y120
	101 - 94										
	102 - 70										
	103 - 90										
150-51-12	122 - 17	3		P1							
	123 - 15										
	125 - 10										
	136 - 10										
	136 - 28										
	355 - 34										
	355 - 42										
	355 - 50										
	355 - 57										
	PG. 1019										
	PG. 1023										
150-51-16	137 - 30	1									
	355 - 72										
	PG. 1019										
	PG. 1023										
150-51-6	122 - 14	5							R	4700-C00-3721	G250
	122 - 20										
	123 - 12										
	123 - 18										
	125 - 13										
	125 - 17										
	136 - 13										
	136 - 24										

PART NUMBER	FIGURE AND INDEX	TOTAL QTY.	MICRO-FILM NUMBER	MAINTENANCE CODE DATA: SOURCE CODE	INST'L CAPABILITY	PRE-INST'L CAPABILITY	RECOVERABILITY	SUPPORT EQUIPMENT	FEDERAL STOCK NUMBER DATA: COGNIZANCE CODE	FEDERAL STOCK NUMBER	MFG. CODE (TSMC)
	137 - 29										
	355 - 36										
150-51-8	122 - 11	5		P1							
	123 - 9										
	125 - 18										
	136 - 18										
	136 - 26										
	136 - 71										
	137 - 28										
	137 - 77										
	355 - 46										
	355 - 52										
15051-6	358	2							R	4700-C00-3721	G250
15051-8	358	2									
1500	120	2									
1500D		1		P1	F	0	R				
1500D-3	293 - 4	1		P1	F	0	R		R	6615-575-9480	VAIS
1500N		1									
1500P	294 - 7	1		P1	F	0	R		R	6610-575-9344	VAIO
15011-1-A1		1							R	6605-315-8810	VTHZ
15018-1-A	276 - 21	1							R	6605-524-3498	VTIJ
	276 - 22										
									R	6600-601-9410 OR	VTIB
15018-1A		1		P1	F	0	R		R	6605-524-3498	VTIJ
151-31703	41 - 58	2	CU110	P	F	0	C		R	1560-330-8886	ANAA
151-31877- 1		1									
151-31877- 5	53 - 35	1		M		0					
151-31877- 7	53 - 37	1		M		0					
151-31877- 9		1		M		0					
151-31877- 11	53 - 34	1		M		0					
151-31877- 12	53 - 36	1		M		0					
151-31877- 20	53 - 24	1		A		F					
151-33516	25 - 37	4		P	F	0	C		R	5315-664-0825	ANAA
151-33619	200 - 4	1		M		0					
151-42006	355 - 91	4	CR115	P	F	0	C		R	1560-477-9311	ANAA
	PG. 1015										
	PG. 1023										
151-42013	355 - 89	4	CR117	P	F	0	C		R	1560-125-2152	ANAA
	PG. 1015										
	PG. 1023										
151-42013- 3		4	CR117	M		0					
151-42019	355 - 86	1	CR116	P3	F	0	C		R	1560-373-6442	ANAA
	PG. 1023										
151-42035	355 -162	2	CU112	M		0					
	PG. 1015										
	PG. 1023										
151-42038	PG. 1015	2									
151-42047		1							R	2990-037-2379	ANAA
151-42048	355 -163	2	CR119	M		0					
	PG. 1023										
151-42082	355 -179	1	CR121	P	F	0	C		R	1560-571-5456	ANAA
	PG. 1015										
	PG. 1023										
151-48082		1	CU120								
151-48131		1		M		0					
151-52502- 5	53 - 40	1		P1					P	1560-373-6443	ANAA
151-52502- 7	53 - 40	1		M		0			R	1560-522-8860	ANAA
151-53638		1		M		F					
151-53638- 3	351 -109	1		M		F					
151-54037- 9	234 - 79	4	CR125	X1							
	234 -100										
	235 - 78										
	235 - 98										
	238 - 17										
1510-05-00	219	4									
151005		4									
152-31919- 5	47 - 65	11	CM 10	P1	F	0	C		R	1560-370-8193	ANAA
152-31919- 11	47 - 66	8	CM 10	P1	F	0	C		R	1560-697-8416	ANAA
152-52104- 3	179 - 25	1		X2							
152000-6		4									
153-44	27 - 12	2							R	1620-214-4203	XCPT
153-54234- 5	209 - 9	1									
153-54264- 5		1		M		0					
153-54264- 21		1									
155-25-12		3									
155-25-8	358	4									
15551	356 - 6	4							R	2840-219-3041	GH80
	PG. 1015										
156-73314	353 - 5	1	AQ 23	P1	F	0	C		R	1660-438-0282	ANAA
	353 - 29										
157-31107	331	1		M		0					
157-31939		2	AQ100	M		0					
157-33307	40 - 12	24	CR150	P1	F	0	C		R	1560-185-5076	ANAA
	45 - 6										
157-33324	64 -100	1	DR246	P	F	0	S		R	1560-185-5077	ANAA
	67										
157-33324- 3	67 - 28	1		M		0					
157-33325	67	1	CR151	M		0					
157-33325- 3	67 - 30	1	CR151	M		0					
157-33326	67 - 26	1	CR152	M		0					
157-33326- 3	67	1	CR152								
157-33327	67 - 31	1		M		0					
157-33328- 3	67 - 29	1	CR153	P					R	1560-185-5079	ANAA
157-49019	225 - 19	1		M		0					
157-52481	184 -108	2									
	185 - 70										
157-58413		9		M		0					
157-58414	136 - 89	1									
157-58532		2		M		0					
157-61019	331 - 12	2	DR293	M		0			R	5310-330-6696	B210
15716-B	276 - 6	1									
15716-1-A	207 - 16	1							R	6605-315-8624	VCFA
	208 - 16										
	233 - 12										

PART NUMBER	FIGURE AND INDEX	TOTAL QTY.	MICRO-FILM NUMBER	MAINTENANCE CODE DATA: SOURCE CODE	INSTL CAPABILITY	PRE-INSTL CAPABILITY	RECOVERABILITY	SUPPORT EQUIPMENT	FEDERAL STOCK NUMBER DATA: COGNIZANCE CODE	FEDERAL STOCK NUMBER	MFG. CODE (TSMC)
	276 - 6										
15716-1-8	207 - 16	1							R	6605-586-7462	VCFA
	208 - 16										
	239 - 12										
	276 - 6										
15820-1-A	293 - 4	1		P1					R	6615-505-8644	VAGC
15820-1-B	293 - 4	1		P1	F	O	R		R	6615-620-5771	VALC
1588-2		1		A		F					
1588-2-C	279 - 26	1		A					R	2920-390-8102	
1588-2-D	279 - 26	1		A							
1589-1C		1		P1	F	O	R		R	2920-733-6003	ZECP
159-16247		1							R	1560-554-4370	ANAA
159-18051		1							R	1560-662-7541	ANAA
159-31829- 9		1							R	5315-664-8642	ANAA
159-31844		1							R	1560-250-9089	ANAA
159-52117- 29	184	2	CD 57	M		F					
159-53325- 15		1							R	1560-590-8278	ANAA
159-53353	350	1	CD 66	P	F	O	R		R	1500-300-2064	ANAA
159-53432	351 - 68	2	CD 58	P					R	1680-373-6451	ANAA
159-53433	351 - 67	2	CB150	M		O					
16-1154-11		1							R	1650	
160-73302	353 - 11	3									
160-73302- 3	353 - 11	3	BN 29	P	F	O	C		R	1560-524-8299	ANAA
1600	164	1		P1					R	1600-C02-1006	Y120
	165 - 61										
16010-1-A	210 - 43	1		P1					R	6605-326-0848	VACR
	211 - 15										
16010-1-B	211 - 15	1									
	211 - 16										
	276 - 7										
16010-18		1							R	6605-586-5710	VAIT
1604-76	29 - 21	1									
1606-A29-25	111 - 20	2									
161-31877	53	1									
161-31877- 3	53 - 29	2		M		O					
161-31935	48 - 5	1	CR160	M		O					
161-31935- 3		1	CR160	M		O					
161-31935- 5		1	CR160								
161-31935- 7		1	CR160	M		O					
161-31935- 9		1	CR160	M		O					
161-31935- 11		1	CR160	M		O					
161-31935- 13		1	CR160	M		O					
161-31935- 15		1	CR160	M		O					
161-31935- 17		1	CR160	M		O					
161-31935- 19		1	CR160	M		O					
161-31935- 21	48	1	CR160	P	F	O	S		R	1560-511-1272	ANAA
161-48283	118 - 2	2	CU 9	P					R	1560-373-6456	ANAA
161-48284	118 - 4	2	CU 8	P3	F	O	C		R	1500-C00-2077	ANAA
161-48285	118 - 5	2	CU 10	M		O					
161-48286	118 - 11	1	DR247	M		O					
	118 - 31										
161-48286- 3		4		M		O					
161-48322	118 - 14	4		P	F	O	C		R	5305-207-4193	ANAA
	118 - 34										
161-58827	140 - 15	1		M		O			R	1650-260-4097	ANAA
161-58827- 3		1							R	1650-612-7280	ANAA
16145		2									
16146	134	4							R	5340-514-2461	GH80
	135										
16281-200	351	4							R	5340-321-4189	GH80
	356 - 3										
	PG. 1013										
163-53715	130 - 17	1									
163-587111	128 - 52	18		P1					R	1650-219-2061	ANAA
	128 - 60										
	131 - 79										
	138 - 59										
	155 - 57	1									
163-58715	124	2	AX 17	P1	F	O	S		R	1650-373-7903	ANAA
163-587259	124 - 98	2	CR168	X1							
163-587260	124 - 94	4	CR169	X1							
163-587261	124 - 97	2		M		O					
163-58759		1									
1637		2									
165-10-1000		2							R	5935-500-9443	D336
165-16012	19 - 37										
	19 - 86										
	19 - 26	6	CU 6	P					R	1560-048-0251	ANAA
165-31923		2		M		O					
165-31924- 10	48 - 13	1									
165-31924-10	48 - 13	2	CR205	P1	F	O	S		R	1560-511-1368	ANAA
165-31926	48	2		M		O					
165-31928- 3		2		M		O					
165-39015- 3	78 - 76	2		M		O					
165-48126		2	DR228								
165-48405		1							R	1650-386-4021	ANAA
165-51091	219 - 4	1		M		O			R	1560-048-0252	ANAA
	219 - 17										
165-51098	219 - 16	1	CU 5	M		O			R	1560-048-0253	ANAA
165-51099	219	11	DR278	M		O			R	1560-373-6472	ANAA
165-51172	240 - 15	1		M		O					
165-52006	191 - 18	5		M		O					
	191 - 32										
	192 - 10										
165-52016	181 - 13	2	AQ 95	M		O					
	184 -126	1									
	185 - 86										
165-52016- 3	198 -118	1									
165-523183	174 - 59	1	CP209	M		O					
	174 - 88										
165-52402- 3	186 - 52	1		X2							
165-52402- 5	186	1									
165-52409- 5		1		X2							
165-53451	350	1	CR213	P	F	O	S		R	4820-094-9999	ANAA
165-53451- 3	350 - 73	1	CR213	M		O					

PART NUMBER	FIGURE AND INDEX	TOTAL QTY.	MICRO-FILM NUMBER	MAINTENANCE CODE DATA: SOURCE CODE	INSTL CAPABILITY	PRE-INSTL CAPABILITY	RECOVERABILITY	SUPPORT EQUIPMENT	FEDERAL STOCK NUMBER DATA: COGNIZANCE CODE	FEDERAL STOCK NUMBER	MFG. CODE (TSMC)
165-53451- 5	350 - 69	1									
165-53452	350 - 71	1	AR118	M		O					
165-53453	350 - 72	1	AQ105	M		O					
165-53580	350	1	CR215	P	F	O	C		R	1560-612-7248	ANAA
165-53591	350	1		P	F	O	C		R	1680-370-8211	ANAA
165-54039- 13	300 - 13	2		M		O					
	301 - 11										
165-54039- 19	305 - 5	1									
	306 - 8										
165-54094		3	AQ104	X1							
165-54184		1	CR217	M		O					
165-54251	300 - 12	2	CR217	M		F					
	301 - 10										
165-547134		1		M		O					
165-58060	135 - 52	1		P1	F	O	S		R	1650-219-2063	ANAA
165-58060- 3		1		X1							
165-58112	132 - 13	4		M		O					
165-58112- 3		4		M		O					
165-58112- 5		4		M		O					
165-58115	132	2	DR303	X1					R	1650-373-7904	ANAA
165-58115- 3	132 - 21	2	DR303	M		O					
165-58115- 5		4	DR303								
165-58115- 7	132 - 22	2	DR303	M		O					
165-58117	132 - 26	2		X1					R	1650-219-2064	ANAA
165-58118	132 - 17	2		P1	F	O	S		R	1650-219-2065	ANAA
165-58119		2	DR279	M		O					
165-58123- 5	132 - 33	1									
165-58372- 5	132 - 33	2		X1					R	1650-373-7909	ANAA
165-58375	132 - 14	2		P1	F	O	C		R	1650-393-9899	ANAA
165-58376	132 - 15	2		P1	F	O	S		R	1650-373-7910	ANAA
165-58403	132 - 28	2		X1					R	1650-386-4020	ANAA
165-58404	132 - 30	2		X1					R	1650-219-2067	ANAA
165-58405	132 - 19	2		M		O			R	1650-386-4021	ANAA
165-58405- 3		2		M		O					
165-58405- 5		2		M		O					
165-58410- 3	132 - 31	8	DR280	P1	F	O	C		R	1650-026-2457	ANAA
165-58474	132 - 23	4	DR237	P1	F	O	C		R	5330-373-7911	ANAA
165-587178		1	DR281								
165-58733	131 - 74	2		P1	F	O	S		R	1650-373-7913	ANAA
165-58775	131 - 75	2	CR219	M		O					
165-588115- 3		1									
165-588115- 7		1									
165-954007		1	DR302								
16606-A23-115		2									
169-31154	56 - 26	1	CK 98	M		O					
169-31344	333 - 92	1	BZ269	M		O					
170-48302		2	AO 99								
170-54041	241 - 9	2							R	5930-663-7026	D446
170-54042	241 - 10	1							R	5330-641-5170	D446
170-54763		1	DR258	M		F					
170-58182		2	DR239	X1							
170-58204		1	CR221	M		O					
170-58241	140 - 17	1		M		O			R	1650-373-7914	ANAA
170-58247	140 - 22	1		M		O					
170-73073	PG. 1003	1		P			C		R	1560-395-6457	SNAA
170-74060	213 - 61	8	AW 62								
170-74084	213 - 60	8	AS 94	M		O					
170A-5 1/2	286A- 5	5									
170A2		1									
1704-2	149 - 16	1									
17042		1							R	4730-204-1664	GH80
17197-22		1									
172-31854		2									
172-31854- 3		1		M		O					
172-42050- 9		1							R	1560-524-8301	ANAA
172-53314- 3		4	CM 1	M		O					
172-53314- 9		2	CM 1	M		O					
172-53364		1		M		O					
172-53364- 3		1	CR231	M		O					
172-53364- 5		1	CR231	M		O					
172-53374- 3	351	1	CU 19	P	F	O	C		R	1680-094-6609	ANAA
172-53374- 5	350 - 2	1	CU 19	P	F	O	C		R	1680-094-6610	ANAA
	351										
172-58732- 3	131 - 72	2		P	F	O	S		R	1650-219-2079	ANAA
172B2	240 - 1	1		P1	F	O	R		R	6685-562-8407	VIXR
	315 - 44										
	318 - 39										
17200		1									
17210-1-A	276 - 8	1							R	6605-514-4944	VTIH
17210-1A		1		P1	F	O	R		R	6605-514-4944	VTIH
1725-1BD-A1-1	223	1							R	6610-663-4116	VIYT
	318 - 35										
17267	37 - 12	1		P1	F	O	S		R	4730-202-6648	X110
1729	16	6									
173-31830	78 - 76	1									
173-58134		2		M		O					
17425-N3-12		1									
1743	26 - 49	2							R	5340-286-4077	GB90
175-53091- 3	74	2	CP221	M		O					
175-53374- 3		1									
175-54305- 5	259 - 83	1	DK209	M		O					
175-58709- 21		1							R	1650-506-9435	ANAA
175-71046	213 - 16	1	CV 1	M		O					
175-71046- 3		1	CV 1	M		O					
17530-12		1							R	5935-098-5014	QCED
176-31931- 3		1	CU 20								
176-31931- 5	PG. 1015	1	CU 20	X1							
176-31931- 11	355 -160	1	CU 20	X1							
	PG. 1015										
	PG. 1023										
176-31932		1	CU127	M		O					
176-31932- 3	355 -158	1	CU127	M		O					
	PG. 1015										
	PG. 1023										
176-48253		1	DR294								

PART NUMBER	FIGURE AND INDEX	TOTAL QTY.	MICRO-FILM NUMBER	MAINTENANCE CODE DATA: SOURCE CODE	INSTL CAPABILITY	PRE-INSTL CAPABILITY	RECOVERABILITY	SUPPORT EQUIPMENT	FEDERAL STOCK NUMBER DATA: COGNIZANCE CODE	FEDERAL STOCK NUMBER	MFG. CODE (TSMC)
176-48253- 5		2	DR294	M		O					
176-48253- 9		2	DR294	M		O					
176-48253- 11		2	DR294	M		O					
176-48253- 13		2	DR294	M		O					
176-48253- 17		2	DR294	M		O					
176-48253- 19		16	DR294	M		O					
176-48253- 21		8	DR294	M		O					
176-48253- 23		2	DR294	M		O					
176-48253- 25		4	DR294	M		O					
176-48253- 31		2	DR294								
176-48253- 33		2	DR294	M		O					
176-48253- 41	118 - 47	2		X1							
176-48254	116 - 84	4	CU129	P					P	1560-373-6524	ANAA
176-48255	116 - 80	1		P					P	1640-370-8263	ANAA
176-48256	118 - 50	2	CP242	X2							
176-48259- 3	116	1	CU190	X2							
176-48259- 5	116	1	CU190	X2							
176-48260	116 - 89	4	CU130	M		O					
176-48261		1	DR298	M		O					
176-48261- 3		2	DR298	M		O					
176-48261- 7		4	DR298	M		O					
176-48261- 21	116 - 46	1	DR298	M		O					
176-48263- 3	116	1	CU191	X2							
176-48263- 5	116	1	CU191	X2							
176-48269	116 - 57	6	CR243	P3	F	O	C		R	1640-370-8257	ANAA
	118 - 17										
	118 - 36										
176-48271	118 - 18	4	CU 22	M		O					
	118 - 37										
176-48271- 3		4	CU 22	M		O					
176-48272	118 - 48	2	CU131	M		O					
176-48275- 11	118 - 41	4	AR 65	M		O					
	118 - 49										
176-48276	116 - 62	2	CR403	P3	F	O	C		R	1640-370-8258	ANAA
176-48277- 31	116 - 61	2	CU193	P1	F	O	C		R	1560-345-6518	ANAA
176-48283	116 - 65	4		P3	F	O	C		R	2910-037-2439	ANAA
176-48288- 3	116 - 22	8	CR104	M		O					
176-48288- 5	116 - 53	4	CR404	M		O					
176-48297	116 - 69	2	DR282	M		O					
176-48297- 3		2	DR282	M		O					
176-48297- 5		2	DR282	M		O					
176-56375		1									
176-73073	PG. 1003	1									
177-58047- 10	132 - 13	2	DR292	P1	F	O	R				
177-58047- 15	132 - 11	2	DR292	P1	F	O	R		R	1560-336-1275	ANAA
177-58101- 10	132 - 29	4		P	F	O	C		R	5340-598-1597	ANAA
177-58101- 37	132 - 27	4		P	F	O	C		R	1650-612-7281	ANAA
179-34354	33 - 13	2		P1	F	O	C		R	1560-370-8260	ANAA
179-34504	66 - 11	1	CR411	P1	F	O	S		R	1560-048-0896	ANAA
179-34517		1	CU136								
179-34521	67 - 12	1	CU137	M		O					
179-34522	66 - 6	1	CR413	P1	F	O	S		R	1560-031-4707	ANAA
179-42011	355 -178	1	CU147	P	F	O	C		R	1560-373-6520	ANAA
	PG. 1015										
	PG. 1023										
179-48243		1	DR283								
179-48329	341 - 12	4		M		O					
179-48329- 13	341 - 12	4		M		O					
179-48329- 15		4									
179-54157- 5	259 - 52	4	CU148	P	F	O	S		R	5340-531-7794	ANAA
	259 -108										
	259 -126										
	259 -202										
179-56165		1	DR240	P	F	O	S		R	1560-373-6523	ANAA
179-56165- 3		1	DR240	M		O					
179-56166		1	CU 88	M		O					
179-56327	75 - 4	2	CU 89	P	F	O	C		R	1560-550-8033	ANAA
179-56374		2	DR241	M		O					
179-56375		2	DR242	M		O					
18D02	136 - 98	1									
18D2	123 - 49	2		P1					R	6605-516-2233	V170
	124 - 39										
	125 - 65	1									
	126 - 40										
	127 - 40										
	137 -114										
180-53341- 11		2		M		O					
180-53358- 11	PG. 1017	3	AQ101	M		O					
180-69005		1	DR290								
180-948040- 5	99 -102	1									
	100 -196	1									
1800	141 - 18	1							R	1650-098-2028	Y120
18050-13		1							R	1600-C04-5411	X110
18050-1303-23	56 - 33	1							R	1680-041-4271	X110
18090-5	56 - 40	1									
	272 - 4										
181-00024		1	DH 39								
181-05008		1	DM130								
181-14025		1	DQ113								
181-14064- 5		1							R	1560-590-8785	ANAA
181-14064- 6		1							R	1560-590-8786	ANAA
181-14230		1	DN 23								
181-14542		1	DH 67								
181-14646	3 - 27	1	CB289	M		O					
181-14691	53 - 62	1	CB169	M		O					
181-17303		1	DK169								
181-17305		1	DM 14								
181-17346		1	DQ114								
181-232183- 3		1	CF303	M		O					
181-23470		4									
181-31004	33	18	U189P	1					R	1560-048-1027	ANAA
181-31004- 3		1	BU189	M		O					
181-31004- 7		1	BU189	M		O					
181-31004- 9		1	BU189								
181-31004- 11		1	BU189	M		O					
181-31004- 13		1	BU189	M		O					
181-31004- 15		1	BU189	M		O					
181-31004- 17		1	BU189	M		O					
181-31004- 19		1	BU189	M		O					
181-31004- 21		1	BU189	M		O					
181-31004- 23		1	BU189	M		O					
181-31004- 25		1	BU189	M		O					
181-31004- 27		1	BU189	M		O					
181-31004- 28		1	BU189	M		O					
181-31004- 29		1	BU189	M		O					
181-31004- 31		1	BU189	M		O					
181-31004- 33		1	BU189	M		O					
181-31004- 34		1	BU189	M		O					
181-31004- 35		1	BU189	M		O					
181-31004- 36		1	BU189	M		O					
181-31004- 37		1	BU189	M		O					
181-31004- 38		1	BU189	M		O					
181-31004- 39		2	BU189	M		O					
181-31004- 41		2	BU189	M		O					
181-31004- 43		1	BU189	M		O					
181-31004- 44		1	BU189	M		O					
181-31004- 45		1	BU189	M		O					
181-31004- 51		1	BU189	M		O					
181-31004- 59		1	BU189								
181-31004- 60		1	BU189	X1							
181-31004- 61		2	BU189	M		O					
181-31004- 65		1	BU189	M		O					
181-31004- 67	34 - 35	2	BU189	M		O					
181-31004- 69		1	BU189	M		O					
181-31004- 70		1	BU189	M		O					
181-31004- 71		1	BU189	M		O					
181-31004- 73		1	BU189	M		O					
181-31004- 74		1	BU189	M		O					
181-31004- 75		2	BU189	M		O					
181-31004- 77		2	BU189	M		O					
181-31004- 79		1	BU189	M		O					
181-31004- 81		1	BU189	M		O					
181-31004- 83	34	1	BU189	M		O					
181-31004- 85	34	2	BU189								
181-31004- 87		1	BU189								
181-31004- 89		1	BU189	M		O					
181-31004- 91	34 - 38	1	BU189	M		O					
181-31004- 93	34 - 37	1	BU189	M		O					
181-31004- 95	34 - 40	1	BU189	M		O					
181-31004- 97		1	BU189	M		O					
181-31004- 98		1	BU189	M		O					
181-31004-151	33 - 36	1	BU189	P1	F	O	S		R	1560-315-5693	ANAA
	34 - 1										
181-31008	34 - 5	2	CC 10	M		O					
181-31010	34 - 18	2	CC 11	M		O					
181-31011	34 - 32	2	CC 12	M		O					
181-31012	34 - 2	2	CC207	A		F					
181-31014	35 - 53	2	BB 11	M		O					
181-31014- 3	35 - 54	2	BB 11	M		O					
181-31018- 3	35 - 33	4	BB 29	M		O					
	42 - 59										
181-31018- 5	42 - 60	1	BB 29								
181-31018- 7	35 - 34	4	BB 29	M		O					
181-31018- 11	35 - 32	4	BB 29	P	F	O	C		R	1560-570-2207	ANAA
	42 - 58										
181-31019- 1	34 - 11	3	BB 30	M		O					
	35 - 36										
181-31019- 2	35	1	BB 30	M		O					
181-31020	35 - 47	8	BB 12	M		O					
	42 - 44										
	42 - 74										
181-31021	34 - 14	8	AN160								
181-31022- 3	34 - 4	24	BB 31	P	F	O	C		R	1560-341-4566	ANAA
	35										
	41 - 52										
	42 - 50										
181-31023- 1	35 - 48	1	BB 13	M		O					
181-31023- 2	35	1	BB 13	M		O					
181-31023- 3	35	1	BB 13	M		O					
181-31023- 4	35	1	BB 13	M		O					
181-31024	35 - 57	4	BB 32	M		O					
181-31024- 3		4	BB 37	M		O					
181-31025- 3		1	CG245	M		O					
181-31025- 4		1	CG245	M		O					
181-31025- 5		1	CG245								
181-31025- 6		1	CG245								
181-31025- 7		1	CG245	M		O					
181-31025- 8		1	CG245	M		O					
181-31025- 9		1	CG245	M		O					
181-31025- 10		1	CG245	M		O					
181-31025- 11		1	CG245	M		O					
181-31025- 12		1	CG245	M		O					
181-31025- 13		1	CG245	M		O					
181-31025- 14		1	CG245	M		O					
181-31025- 17		1	CG245	M		O					
181-31025- 18		1	CG245	M		O					
181-31025- 19		1	CG245								
181-31025- 20		1	CG245								
181-31025- 21		1	CG245	M		O					
181-31025- 22		1	CG245	M		O					
181-31025- 25		1	CG245	M		O					
181-31025- 26		1	CG245	M		O					
181-31025- 27		1	CG245	M		O					
181-31025- 28		1	CG245	M		O					
181-31025- 31		1	CG245	M		O					
181-31025- 32		1	CG245	M		O					
181-31025- 33		2	CG245	M		O					
181-31025- 35		2	CG245	M		O					
181-31025- 37		2	CG245	M		O					
181-31025- 41		1	CG245	M		O					

PART NUMBER	FIGURE AND INDEX	TOTAL QTY.	MICRO-FILM NUMBER	MAINTENANCE CODE DATA: SOURCE CODE	INSTL CAPABILITY	PRE-INSTL CAPABILITY	RECOVERABILITY	SUPPORT EQUIPMENT	COGNIZANCE CODE	FEDERAL STOCK NUMBER DATA: FEDERAL STOCK NUMBER	MFG. CODE (TSMC)
181-31025- 42		1	CG245	M		0					
181-31025- 43		1	CG245	M		0					
181-31025- 44		1	CG245	M		0					
181-31025- 45		1	CG245								
181-31025- 46		1	CG245								
181-31025- 47		1	CG245	M		0					
181-31025- 48		1	CG245	M		0					
181-31025- 49	41 - 76	2	CG245	M		0					
181-31025- 50	41	2	CG245	M		0					
181-31025- 51		2	CG245								
181-31025- 52		2	CG245								
181-31025- 53		2	CG245								
181-31025- 54		2	CG245								
181-31025- 57		14	CG245	M		0					
181-31025- 59		1	CG245	M		0					
181-31025- 60		1	CG245	M		0					
181-31025- 61		4	CG245	M		0					
181-31025- 63		4	CG245	M		0					
181-31025- 65		4	CG245	M		0					
181-31025- 67		2	CG245	M		0					
181-31025- 69		2	CG245	M		0					
181-31025- 71		4	CG245	M		0					
181-31025- 73		1	CG245	M		0					
181-31025- 74		1	CG245	M		0					
181-31025- 75		2	CG245	M		0					
181-31025- 77		2	CG245	M		0					
181-31025- 79		4	CG245	M		0					
181-31025- 81		6	CG245	M		0					
181-31025- 83		1	CG245	M		0					
181-31025- 84		1	CG245	M		0					
181-31025- 87		2	CG245	M		0					
181-31025- 89		2	CG245	M		0					
181-31025- 95		6	CG245	M		0					
181-31025-103		1	CG245	M		0					
181-31025-104		1	CG245	M		0					
181-31025-105		1	CG245	M		0					
181-31025-106		1	CG245	M		0					
181-31025-107		1	CG245								
181-31025-108		1	CG245								
181-31025-113		1	CG245	M		0					
181-31025-117		4	CG245	M		0					
181-31025-119		8	CG245	M		0					
181-31025-121		1	CG245	M		0					
181-31025-122		1	CG245	M		0					
181-31025-123		1	CG245								
181-31025-124		1	CG245								
181-31025-127		1	CG245	M		0					
181-31025-128		1	CG245	M		0					
181-31025-129		1	CG245								
181-31025-130		1	CG245								
181-31025-131		1	CG245	M		0					
181-31025-132		1	CG245	M		0					
181-31025-133		1	CG245	M		0					
181-31025-134		1	CG245	M		0					
181-31025-135		1	CG245	M		0					
181-31025-137	41 - 24	1	CG245	M		0					
181-31025-139		2	CG245	M		0					
181-31025-141	41 - 75	4	CG245	M		0					
181-31025-142	41	4	CG245	M		0					
181-31025-143	41 - 72	4	CG245	M		0					
181-31025-144	41	4	CG245	M		0					
181-31025-147		1	CG245	M		0					
181-31025-149		1	CG245	M		0					
181-31025-153		1	CG245	M		0					
181-31025-154		1	CG245	M		0					
181-31025-155		1	CG245	M		0					
181-31025-156		1	CG245	M		0					
181-31025-301		1	CG245						R	1560-098-1446	ANAA
181-31025-302		1	CG245						R	1560-031-4718	ANAA
181-31025-521	39 - 44 41 - 1	1	CG245	P1	F	0	S		R	1560-333-7844	ANAA
181-31025-522	39 41	1	CG245	P1	F	0	S		R	1560-333-7845	ANAA
181-31027	41 - 40	3	CC 14	M		0					
181-31028- 3	41 - 39	6									
181-31028- 9	41	6		M		0					
181-31028- 15		2									
181-31029	41 - 47 42 - 45	8	CC208	M		0					
181-31031- 3		6	CC 15	M		0					
181-31031- 3	41	1									
181-31031- 5	41 - 35	1									
181-31031- 7		6	CC 15	M		0					
181-31031- 11	41 - 34	6	CC 15	P	F	0	C		R	1560-535-5521	ANAA
181-31032	41 - 42	6	CC 16	M		0					
181-31034- 3	39 - 47	1	AN212	M		0					
181-31034- 5		1	AN212								
181-31040- 1	39 - 41	1	CP227	M		0					
181-31040- 2	39	1	CP227	M		0					
181-31045		1	CV 50								
181-31045- 3		1	CV 50								
181-31045- 5		1	CV 50	M		0					
181-31045- 7	39 - 20	1	CV 50	M		0					
181-31045- 11	39 - 19	1	CV 50	M		0					
181-31046	39 - 51	1	AW332	M		0					
181-31046- 3		1	AW332	M		0					
181-31046- 5		1	AW332	M		0					
181-31050- 3		1	AP 42	X1							
181-31050- 4		1	AP 42	X1							
181-31050- 5		1	AP 42								
181-31050- 6		1	AP 42								
181-31050- 7	44 - 4	1	AP 42	M		0					
181-31050- 8	44	1	AP 42	M		0					
181-31050- 9		2	AP 42	M		0					
181-31050- 11		2	AP 42	M		0					
181-31050- 13		1	AP 42	M		0					
181-31050- 14		1	AP 42	M		0					
181-31050- 15		1	AP 42	M		0					
181-31050- 16		1	AP 42	M		0					
181-31050- 17		2	AP 42	M		0					
181-31050- 19		1	AP 42	X1							
181-31050- 20		1	AP 42	X1							
181-31050-101	44 - 1	1	AP 42	P1	F	0	R		R	1560-031-4721	ANAA
181-31050-102	44	1	AP 42	P1					R	1560-031-4722	ANAA
181-31054- 3		1	BU249	M		0					
181-31054- 5	44 - 23	1	BU249	M		0					
181-31054- 6	44 - 22	1	BU249	M		F					
181-31054- 11	44 - 21	1	BU249	P1	F	0	C		R	1560-511-1374	ANAA
181-31058- 3	44 - 2	2	AW214	P1	F	0	C		R	5340-037-2453	ANAA
181-31058- 4	44	1	AW214	P1	F	0	C		R	1560-522-8861	ANAA
181-31058- 5	44 - 3	1	AW214	P1	F	0	C		R	5340-037-2454	ANAA
181-31058- 6	44	1	AW214	P1	F	0	S		R	1560-535-8325	ANAA
181-31058- 8	44	1	AW214						R	5340-572-6758	ANAA
181-31058- 10	44	1	AW214						R	5340-572-6757	ANAA
181-31059	35	4	BB 14	M		0					
181-31060	44 - 24	1	CC209	M		0					
181-31060- 3	44 - 26	1	CC209	M		0					
181-31060- 5	44 - 25	1	CC209	M		0					
181-31060- 11		1	CC209								
181-31070		4	CC 17								
181-31081- 5		1	AP 66	M		0					
181-31081- 7		1	AP 66	M		0					
181-31081- 9		1	AP 66	M		0					
181-31081- 11		1	AP 66	M		0					
181-31081- 13		1	AP 66	M		0					
181-31081- 15		1	AP 66	M		0					
181-31081- 51		1	AP 66								
181-31088- 5	39 - 13	1	AX249	M		0					
181-31088-101	39 - 12	1	AX249	M		0					
181-31093- 1	42 - 49	2	BE295	P1	F	0	C		R	1560-031-4725	ANAA
181-31093- 2	42	2	BE295	P1	F	0	C		R	1560-031-4726	ANAA
181-31094	41 - 51	6	CC325	P1	F	0	S		R	1560-028-0964	ANAA
181-31096	35 - 41 41 - 50 42 - 57	10	BB 15	P	F	0	C		R	1560-863-2020	ANAA
181-31104		1	CC214								
181-31104- 3	37 - 11	1	CC214								
181-31106	43 - 77	1	CC215	M		0					
181-31106- 3	38 - 43	1	CC215								
181-311101- 1		1	CC324	M		0					
181-311101- 2		1	CC324	M		0					
181-311103- 1		1	CC325	M		0					
181-311103- 2		1	CC325	M		0					
181-311108		1	DK 21								
181-311109		1	DK 22								
181-31115		1	DG297								
181-31115- 15		1	AZ172	M		0					
181-31115- 17		1	AZ172	M		0					
181-31115- 19		1	AZ172	M		0					
181-31115- 21		1	AZ172	M		0					
181-31115- 23		1	AZ172	M		0					
181-31115- 25		1	AZ172	M		0					
181-31115- 27		1	AZ172	M		0					
181-31115- 29		1	AZ172	M		0					
181-31115- 31		1	AZ172	M		0					
181-31115- 33		1	AZ172	M		0					
181-31115- 35		1	AZ172	M		0					
181-31115- 37		1	AZ172	M		0					
181-31115- 39		1	AZ172	M		0					
181-31115- 41		1	AZ172	M		0					
181-31115- 43		1	AZ172	M		0					
181-31115- 45		1	AZ172	M		0					
181-31115- 47		1	AZ172	M		0					
181-31115- 49		1	AZ172	M		0					
181-31115- 51		1	AZ172	M		0					
181-31115- 53		1	AZ172	M		0					
181-31115- 55		1	AZ172	M		0					
181-31115- 57		1	AZ172	M		0					
181-31115- 67		1	AZ172								
181-31115- 69		1	AZ172								
181-31115- 71		1	AZ172	M		0					
181-31115- 73		1	AZ172	M		0					
181-31115- 75		1	AZ172			0					
181-31115- 95		1	AZ172	M		0					
181-31115- 97		1	AZ172	M		0					
181-31115- 98		1	AZ172	M		0					
181-31115- 99		1	AZ172	M		0					
181-31115-100		1	AZ172	M		0					
181-31115-103		1	AZ172	M		0					
181-31115-105		2	AZ172	M		0					
181-31115-107		1	AZ172	M		0					
181-31115-151		1	AZ172	M		0					
181-31115-203		1	AZ172	M		0					
181-31115-204		1	AZ172	M		0					
181-31115-205		1	AZ172	M		0					
181-31115-207		1	AZ172	M		0					
181-31115-209		1	AZ172								
181-31115-213		1	AZ172	M		0					
181-31115-301	37 - 4	1	AZ172	M		0					
181-31115-311		1	AZ172	M		0					
181-31115-501	37	1	AZ172	M		0					
181-31117- 1	37 - 5	1	CQ 2	A		0					
181-31117- 2	37 - 2	1	CQ 2	A		0					
181-31117- 3	37	1	CQ 2	M		0					
181-31117- 4	37	1	CQ 2	M		0					
181-31117- 5		1	CQ 2	M		0					
181-31117- 6		1	CQ 2	M		0					
181-31118- 51	37 - 8	1	CP229	M		0					
181-31118- 52	37 - 20	1	CP229	M		0					
181-31119- 3		1	CC328	X1							

PART NUMBER	FIGURE AND INDEX	TOTAL QTY.	MICRO-FILM NUMBER	MAINTENANCE CODE DATA: SOURCE CODE	INST'L CAPABILITY	PRE-INST'L CAPABILITY	RECOVERABILITY	SUPPORT EQUIPMENT	FEDERAL STOCK NUMBER DATA: COGNIZANCE CODE	FEDERAL STOCK NUMBER	MFG. CODE (TSMC)
181-31119- 4		1	CC328	X1							
181-31119- 5	37 - 6	1	CC328	P1	D	O	S		R	1560-048-1056	ANAA
181-31119- 6	37 - 3	1	CC328	P1	D	O	S		R	1560-048-1057	ANAA
181-31120- 3	37 - 9	1	CP184						R	1560-373-6565	ANAA
181-31120- 4	37	1	CP184	X2					R	1560-373-6566	ANAA
181-31127- 1		1	CU211	M		O					
181-31127- 2		1	CU211	M		O					
181-31128		1	CC 23	M		O					
181-31130- 3		1	BC196	M		O					
181-31133- 1		1	CC 24	M		O					
181-31133- 2		1	CC 24	M		O					
181-31134- 1		1	AS166	M		O					
181-31134- 2		1	AS166	M		O					
181-31135- 1		1	AN188	M		O					
181-31135- 2		1	AN188								
181-31135- 3		1	AN188	M		O					
181-31135- 4		1	AN188								
181-31135- 6		1	AN188	M		O					
181-31135- 8		1	AN188	M		O					
181-31135-101		1	AN188	M		O					
181-31135-102		1	AN188	M		O					
181-31139	37	2	CC 25	M		O					
181-31140	35 - 58	6	BB 16	M		O					
	35 - 83										
181-31141		2	CC329	M		O					
181-31142		2	AN175	M		O					
181-31143- 1		2	CC 26	M		O					
181-31143- 2		2	CC 26	M		O					
181-31144- 1		1	AN189	M		O					
181-31144- 2		1	AN189	M		O					
181-31145- 1		1	CC330	M		O					
181-31145- 2		1	CC330	M		O					
181-31145- 3		1	CC330	M		O					
181-31145- 4		1	CC330	M		O					
181-31145- 11		1	CC330	M		O					
181-31145- 12		1	CC330	M		O					
181-31147		1	CP235	M		O					
181-31147- 3		1	CP235	M		O					
181-31147- 5		1	CP235	M		O					
181-31147- 7		1	CP235	M		O					
181-31147- 9		1	CP235	M		O					
181-31147- 11		1	CP235	M		O					
181-31147- 13		1	CP235	M		O					
181-31148- 3		1	AX 69	M		O					
181-31148- 9		1	AX 69	M		O					
181-31148- 71		1	AX 69								
181-31148- 81		11	AX 69	M		O					
181-31149- 2		1	CC217	M		O					
181-31150- 3		2	BE164	M		O					
181-31150- 5		1	BE164	M		O					
181-31153		1	CP212	M		O					
181-31156		1	CC219	M		O					
181-31159- 7		1	CP234	M		O					
181-31159- 8		1	CP234	M		O					
181-31159- 15		1	CP234	M		O					
181-31159- 16		1	CP234	M		O					
181-31159- 21		1	CP234	M		O					
181-31159- 22		1	CP234	M		O					
181-31160- 3		2	AW 74	M		O					
181-31160- 4		1	AW 74	M		O					
181-31160- 5		2	AW 74	M		O					
181-31160- 6		1	AW 74	M		O					
181-31160- 7		1	AW 74	M		O					
181-31160- 8		1	AW 74	M		O					
181-31160- 9		1	AW 74	M		O					
181-31160- 10		1	AW 74	M		O					
181-31162- 4		2	CP158	M		O					
181-31162- 5		1	CP158	M		O					
181-31162- 9		1	CP158	M		O					
181-31162- 11		1	CP158	M		O					
181-31163		1	CP201	M		O					
181-31164- 3		2	BB 56	X1							
181-31164- 5	35 - 78	2	BB 56	P1	D	O	S		R	1560-048-1058	ANAA
181-31165	35 - 81	2	BB 33	M		O					
181-31165- 3		2	BB 33	M		O					
181-31166- 3		1	AU128	M		O					
181-31166- 4		1	AU128	M		O					
181-31166- 5		1	AU128	M		O					
181-31166- 6		1	AU128	M		O					
181-31166- 7		1	AU128	M		O					
181-31166- 8		1	AU128	M		O					
181-31166- 15		1	AU128	M		O					
181-31167- 1		1	CC220	M		O					
181-31167- 2		1	CC220	M		O					
181-31169- 1		1	AW374	M		O					
181-31169- 2		1	AW374	M		O					
181-31176		1	CC223								
181-31176- 3		1	CC223								
181-31178		8	CC224	M		O					
181-31178- 3		8	CC224	M		O					
181-31179- 1		2	CC 27	M		O					
181-31179- 2		2	CC 27	M		O					
181-31180		1	CC 28	M		O					
181-31181- 3		1	BA 38	M		O					
181-31181- 4		1	BA 38	M		O					
181-31181- 5		1	BA 38	M		O					
181-31181- 6		1	BA 38	M		O					
181-31181- 7		1	BA 38	M		O					
181-31181- 8		1	BA 38	M		O					
181-31181- 9		1	BA 38	M		O					
181-31181- 10		1	BA 38	M		O					
181-31181- 11		1	BA 38	M		O					
181-31181- 12		1	BA 38	M		O					
181-31182- 1		1	CC 29	M		O					
181-31182- 2		1	CC 29	M		O					

PART NUMBER	FIGURE AND INDEX	TOTAL QTY.	MICRO-FILM NUMBER	MAINTENANCE CODE DATA: SOURCE CODE	INST'L CAPABILITY	PRE-INST'L CAPABILITY	RECOVERABILITY	SUPPORT EQUIPMENT	FEDERAL STOCK NUMBER DATA: COGNIZANCE CODE	FEDERAL STOCK NUMBER	MFG. CODE (TSMC)
181-31184- 3		1	CC225	M		O					
181-31184- 4		1	CC225	M		O					
181-31184- 5		1	CC225	M		O					
181-31184- 6		1	CC225	M		O					
181-31185- 3		1	CC226	M		O					
181-31185- 4		1	CC226	M		O					
181-31185- 5		1	CC226	M		O					
181-31185- 6		1	CC226	M		O					
181-31186- 1		1	AN234								
181-31186- 2		1	AN234								
181-31186- 3		1	AN234								
181-31186- 4		1	AN234								
181-31186- 5		1	AN234								
181-31186- 6		1	AN234								
181-31188		1	CC227	M		O					
181-31196		2	CC 30	M		O					
181-31197- 3		1	CC 31	M		O					
181-31197- 5		1	CC 31	M		O					
181-31198- 1		1	CC233	M		O					
181-31198- 2		1	CC233	M		O					
181-31198- 3		1	CC233	M		O					
181-31198- 4		1	CC233	M		O					
181-31198- 5		1	CC233	M		O					
181-31198- 6		1	CC233	M		O					
181-31199- 3	34 - 3	2	CC341	P1	F	O	S		R	1560-098-1454	ANAA
181-31205		2	CC 32	M		O					
181-31206		1	DH219	M		O					
181-31206- 1		1	DH219	M		O					
181-31206- 2		1	DH219	M		O					
181-31207- 1		1	CC343	M		O					
181-31207- 2		1	CC343	M		O					
181-312109		4	CC 35	M		O					
181-312113- 1		1	BP177	M		O					
181-312113- 3		1	BP177	M		O					
181-312113- 5		1	BP177	M		O					
181-312113- 7		1	BP177	M		O					
181-312113- 11		1	BP177	M		O					
181-312114		1	CC351	M		O					
181-312116- 1		1	AP102	M		O					
181-312116- 2		1	AP102	M		O					
181-312123	39 - 28	1	CF288	P	F	O	C		R	1560-373-6567	ANAA
181-312128- 1		1	BZ249	M		O					
181-312128- 2		1	BZ249	M		O					
181-312129- 3		1	CJ338	M		O					
181-31213		1	CF289	M		O					
181-312133	39 - 4	2	CC355	M		O					
181-312137- 1		1	CC357	M		O					
181-312137- 2		1	CC357	M		O					
181-312141- 3		1	CJ341	M		O					
181-312141- 4		1	CJ341	M		O					
181-312146		1	CJ344	M		O					
181-312146- 3		1	CJ344	M		O					
181-312146- 5		1	CJ344	M		O					
181-312146- 7		1	CJ344	M		O					
181-312147- 1		1	BF414	M		O					
181-312147- 2		1	BF414	M		O					
181-31215		1	DR315								
181-312155- 2		1	DF 8								
181-312155- 21		1	DF 8								
181-312155- 22		1	DF 8	M		O					
181-312155- 31		1	DF 8	M		O					
181-312158		1	CJ348	M		O					
181-312168		2	CF298								
181-312168- 3		2	CF298								
181-312183		1	CF303	M		O					
181-312183- 3		1	CF303	M		O					
181-312183- 5		1	CF303	M		O					
181-312185		1	CC363	M		O					
181-312186		2	CC364	M		O					
181-312187	42 - 83	2	CD 70	M		O					
181-312188	43 - 33	16	CC365	P	F	O	R		R	1560-373-6568	ANAA
	43 - 58										
181-312189		1	AS131	M		O					
181-312189- 3		1	AS131	M		O					
181-312189- 5		1	AS131	M		O					
181-31219- 1	43 - 2	1	CF304	M		O					
181-31219- 2	43	1	CF304	M		O					
181-31220- 3	43 - 45	1	AU 82	P2	D	O	S		R	1560-535-5523	ANAA
181-31220- 4	43 - 46	1	AU 82	P2	D	O	S		R	1560-535-5524	ANAA
181-312201- 1	39 - 71	1	CC369	M		O					
181-312201- 2	39 - 70	1	CC369	M		O					
181-312203- 1	39 - 64	1	CC370	M		O					
181-312203- 2	39 - 63	1	CC370	M		O					
181-312205- 11		1	CO 24								
181-312205- 13		1	CO 24								
181-312206		1	CP204								
181-312206- 3		1	CP204								
181-312206- 11	43 -102	1	CP204	P1	F	O	S		R	1560-535-5525	ANAA
181-312206- 13		1	CP204	X1							
181-312207		6	AX 20	M		O					
181-312207- 3		6	AX 20	M		O					
181-312207- 5		1	AX 20	M		O					
181-312207- 7		1	AX 20	M		O					
181-312207- 17		1	AX 20								
181-312207- 19		1	AX 20								
181-312207- 21		5	AX 20	M		O					
181-312207- 23		5	AX 20	M		O					
181-312207- 29		4	AX 20	M		O					
181-312207- 31		4	AX 20	M		O					
181-312207- 33		1	AX 20	M		O					
181-312207- 35		1	AX 20	M		O					
181-312209		1	AY 88								
181-31221- 1	43 - 25	1	CJ358	M		O					
181-31221- 2	43	1	CJ358	M		O					
181-312211	42 - 85	4	CC372								

PART NUMBER	FIGURE AND INDEX	TOTAL QTY.	MICRO-FILM NUMBER	SOURCE CODE	INST'L CAPABILITY	PRE-INST'L CAPABILITY	RECOVERABILITY	SUPPORT EQUIPMENT	COGNIZANCE CODE	FEDERAL STOCK NUMBER	MFG. CODE (TSMC)
	42 - 86										
181-312211- 11	42 - 87	2	CC372								
181-312215	34 - 36	6	CF309	M		O					
181-312217- 1	39 - 32	1	CZ 50								
181-312217- 3	39 - 33	1	CZ 50	M		O					
181-31222- 5	43 - 43	1	CP190								
181-31222- 6	43	1	CP190								
181-312220- 11	43 - 52	1	CV 52								
181-312220- 12	43	1	CV 52								
181-312220-111		1	CV 52	M		F					
181-312220-112		1	CV 52	M		F					
181-312230	42 - 13	4	CD 71	P	F	O	C		R	1560-535-5526	ANAA
	42 - 20										
181-312248	41 - 44	6	AY 17	M		O					
181-312248- 3		6	AY 17								
181-312248- 5		1	AY 17	M		O					
181-31225- 1		1	AW375	M		O					
181-31225- 2		1	AW375	M		O					
181-31229- 1		1	DR324	M		O					
181-31229- 2		1	DR324								
181-31229- 3		1	DR324	M		O					
181-31229- 4		1	DR324								
181-31229- 5		1	DR324	M		O					
181-31229- 7		1	DR324	M		O					
181-31229- 8		1	DR324	M		O					
181-31229- 10		1	DR324								
181-31229- 12		1	DR324	M		O					
181-31229- 14		1	DR324	M		O					
181-31229- 20		1	DR324	M		O					
181-31229-102		1	DR324	M		O					
181-31230- 3		1	BC 65								
181-31230- 4		1	BC 65								
181-31230- 5		1	BC 65	M		O					
181-31230- 6		1	BC 65	M		O					
181-31230- 7		1	BC 65	M		O					
181-31230- 8		1	BC 65	M		O					
181-31230- 9		2	BC 65								
181-31230- 11		1	BC 65	M		O					
181-31230- 12		1	BC 65	M		O					
181-31230- 13		1	BC 65	M		O					
181-31230- 14		1	BC 65	M		O					
181-31230- 53		1	BC 65	M		O					
181-31230- 54		1	BC 65	M		O					
181-31230-101		1	BC 65	M		O					
181-31230-102		1	BC 65	M		O					
181-31231- 5		1	BL264								
181-31231- 6		1	BL264	M		O					
181-31231- 9		1	BL264	M		O					
181-31231- 11		1	BL264	M		O					
181-31231- 13		1	BL264	M		O					
181-31231- 15		1	BL264	M		O					
181-31231- 17		1	BL264								
181-31231- 18		1	BL264	M		O					
181-31231- 19		1	BL264								
181-31231- 20		1	BL264								
181-31231- 22		1	BL264	M		O					
181-31231- 25		1	BL264	M		O					
181-31231- 29		1	BL264								
181-31231- 33		1	BL264	M		O					
181-31231- 39		1	BL264	M		O					
181-31231- 41		1	BL264	M		O					
181-31231- 42		1	BL264	M		O					
181-31231- 43		1	BL264	M		O					
181-31231- 45		1	BL264	M		O					
181-31231- 47		1	BL264	M		O					
181-31231- 49		1	BL264	M		O					
181-31231- 50		1	BL264	M		O					
181-31231- 51		1	BL264	M		O					
181-31231- 52		1	BL264	M		O					
181-31231- 53		1	BL264								
181-31231- 54		1	BL264								
181-31231- 61		1	BL264	M		O					
181-31231- 63		1	BL264	M		O					
181-31231- 67		1	BL264	M		O					
181-31231- 75		1	BL264								
181-31231- 76		1	BL264								
181-31231- 81		1	BL264	M		O					
181-31231- 82		1	BL264	M		O					
181-31231- 83		1	BL264	M		O					
181-31231- 85		1	BL264	M		O					
181-31231- 87		1	BL264	M		O					
181-31231- 89		1	BL264	M		O					
181-31231- 90		1	BL264	M		O					
181-31231- 91		1	BL264	M		O					
181-31231- 92		1	BL264	M		O					
181-31231- 93		1	BL264	M		O					
181-31231- 94		1	BL264	M		O					
181-31231- 95		1	BL264	M		O					
181-31231- 96		1	BL264	M		O					
181-31231- 99		1	BL264	M		O					
181-31231-100		1	BL264	M		O					
181-31231-103		1	BL264	M		O					
181-31231-105		1	BL264	M		O					
181-31231-107		1	BL264	M		O					
181-31231-112		1	BL264	M		O					
181-31231-114		1	BL264	M		O					
181-31231-152		1	BL264	M		O					
181-31231-401		1	BL264	M		O					
181-31231-402		1	BL264	M		O					
181-31231-405		1	BL264	M		O					
181-31231-701		1	BL264	M		O					
181-31231-702		1	BL264	M		O					
181-31232- 1		1	AW324	M		O					
181-31232- 2		1	AW324	M		O					
181-31233- 1		1	AM 12	M		O					
181-31233- 4		1	AM 12	M		O					
181-31234- 1		1	CF319	M		O					
181-31234- 2		1	CF319	M		O					
181-31235- 5		1	DQ 61	M		O					
181-31235- 6		1	DQ 61	M		O					
181-31235- 7		1	DQ 61	M		O					
181-31235- 8		1	DQ 61	M		O					
181-31235- 9		1	DQ 61								
181-31235- 10		1	DQ 61								
181-31235- 17		1	DQ 61	M		O					
181-31235- 18		1	DQ 61	M		O					
181-31235- 19		1	DQ 61	M		O					
181-31235- 20		1	DQ 61	M		O					
181-31235- 21		1	DQ 61	M		O					
181-31235- 22		1	DQ 61	M		O					
181-31235- 25		1	DQ 61	M		O					
181-31235- 26		1	DQ 61	M		O					
181-31235- 27		1	DQ 61	M		O					
181-31235- 31		1	DQ 61	M		O					
181-31235- 35		1	DQ 61	M		O					
181-31235-101		1	DQ 61	M		O					
181-31235-102		1	DQ 61	M		O					
181-31235-201		1	DQ 61	M		O					
181-31235-202		1	DQ 61	M		O					
181-31235-251		1	DQ 61	M		O					
181-31235-301		1	DQ 61	M		O					
181-31236- 3		1	CJ364	M		O					
181-31236- 4		1	CJ364	M		O					
181-31237- 1		1	CJ365	M		O					
181-31237- 2		1	CJ365	M		O					
181-31238- 1		1	CC376	M		O					
181-31238- 2		1	CC376	M		O					
181-31241- 1		1	CJ366								
181-31241- 2		1	CJ366								
181-31241- 3	43 - 49	1	CJ366	P1	O	O	C		R	1560-508-6822	ANAA
181-31241- 4	43 - 48	1	CJ366	M		O					
181-31242- 1		1	CJ367	M		O					
181-31242- 2		1	CJ367	M		O					
181-31244		4	BZ273	M		O					
181-31247- 1		1	AZ 38	M		O					
181-31247- 2		1	AZ 38	M		O					
181-31247- 3		1	AZ 38	M		O					
181-31247- 4		1	AZ 38	M		O					
181-31247- 5		1	AZ 38								
181-31247- 6		1	AZ 38								
181-31247- 7		1	AZ 38	M		O					
181-31248		2	BZ274	M		O					
181-31249- 1		1	CF321	M		O					
181-31249- 2		1	CF321	M		O					
181-3125- 4		1	CD224	M		O					
181-31254- 7		2	CP185	M		O					
181-31254- 13		1	CP185	M		O					
181-31254- 14		1	CP185	M		O					
181-31254- 15		1	CP185	M		O					
181-31254- 16		1	CP185	M		O					
181-31254- 51		1	CP185	M		O					
181-31254- 52		1	CP185	M		O					
181-31256- 1		1	AY120	M		O					
181-31256- 2		1	AY120	M		O					
181-31256- 3		1	AY120	M		O					
181-31256- 4		1	AY120	M		O					
181-31256- 5		1	AY120	M		O					
181-31256- 6		1	AY120	M		O					
181-31257- 1		1	DH 70	M		O					
181-31257- 2		1	DH 70	M		O					
181-31258		1	CV 48	M		O					
181-31258- 3		1	CV 48	M		O					
181-31259- 3		2	CW 66	M		O					
181-31259- 5		1	CW 66	M		O					
181-31259- 7		1	CW 66	M		O					
181-31259- 9		3	CW 66	M		O					
181-31259- 10		3	CW 66	M		O					
181-31259- 11		1	CW 66	M		O					
181-31259- 12		1	CW 66	M		O					
181-31259- 21		2	CW 66	M		O					
181-31259- 31		1	CW 66	M		O					
181-31259- 41		1	CW 66	M		O					
181-31261		2	CC378	M		O					
181-31262- 2		1	CP181								
181-31262- 3		1	CP181								
181-31262- 4		1	CP181								
181-31262- 5		1	CP181	M		O					
181-31262- 6		1	CP181	M		O					
181-31262- 7		1	CP181	M		O					
181-31262- 8		1	CP181	M		O					
181-31262-101		1	CP181	M		O					
181-31262-102		1	CP181	M		O					
181-31263		1	CV 45	M		O					
181-31263- 3		1	CV 45	M		O					
181-31267		1	DF 4	M		O					
181-31267- 3		1	DF 4	M		O					
181-31268- 1		1	CC379	M		O					
181-31268- 2		1	CC379	M		O					
181-31273- 5		1	CV 42	M		O					
181-31273- 6		1	CV 42	M		O					
181-31273- 11		1	CV 42	M		O					
181-31273- 13		1	CV 42	M		O					
181-31275- 1		1	CC381	M		O					
181-31275- 2		1	CC381	M		O					
181-31277- 1		1	CP178	M		O					
181-31277- 2		1	CP178	M		O					
181-31278- 13		1	DR171	M		O					
181-31278- 15		1	DR171	M		O					
181-31278- 17		1	DR171	M		O					
181-31278- 29		1	DR171	M		O					

PART NUMBER	FIGURE AND INDEX	TOTAL QTY.	MICRO-FILM NUMBER	MAINTENANCE CODE DATA: SOURCE CODE	INSTL CAPABILITY	PRE-INSTL CAPABILITY	RECOVERABILITY	SUPPORT EQUIPMENT	FEDERAL STOCK NUMBER DATA: COGNIZANCE CODE	FEDERAL STOCK NUMBER	MFG. CODE (TSMC)
181-31278- 30		1	DR171	M		O					
181-31278- 31		1	DR171	M		O					
181-31278- 51		1	DR171	M		O					
181-31278- 61		1	DR171	M		O					
181-31279- 1		1	CF323	M		O					
181-31279- 2		1	CF323	M		O					
181-31280- 5		1	BC 45								
181-31280- 7		1	BC 45								
181-31280- 9		1	BC 45								
181-31280- 17		1	BC 45	M		O					
181-31280- 19		1	BC 45	M		O					
181-31280- 21		1	BC 45	M		O					
181-31280- 23		1	BC 45	M		O					
181-31280- 25		1	BC 45	M		O					
181-31280- 27		1	BC 45	M		O					
181-31280-101		1	BC 45	M		O					
181-31280-201		1	BC 45	M		O					
181-31282- 9		1	AY152	M		O					
181-31282- 11		1	AY152								
181-31282- 13		1	AY152	M		O					
181-31282- 15		1	AY152	M		O					
181-31282- 17		1	AY152	M		O					
181-31282- 19		1	AY152								
181-31282- 21		1	AY152	M		O					
181-31282- 25		1	AY152	M		O					
181-31282- 27		1	AY152	M		O					
181-31282- 29		1	AY152	M		O					
181-31282- 33		1	AY152	M		O					
181-31282-301		1	AY152	M		O					
181-31282-401		1	AY152	M		O					
181-31284- 1		1	DP118	M		O					
181-31284- 2		1	DP118	M		O					
181-31286- 5		1	AV 62	M		O					
181-31286- 11		1	AV 62	A		O					
181-31286- 13		1	AV 62	M		O					
181-31286- 15		1	AV 62	M		O					
181-31286- 21		1	AV 62	M		O					
181-31286- 23		1	AV 62	M		O					
181-31286- 25		1	AV 62	M		O					
181-31286- 31		1	AV 62	M		O					
181-31288		1	CC382	M		O					
181-31292- 1		1	AN232	M		O					
181-31292- 2		1	AN232	M		O					
181-31292- 3		1	AN232	M		O					
181-31292- 4		1	AN232	M		O					
181-31293- 7		1	CP210	M		O					
181-31293- 9		1	CP210	M		O					
181-31293- 11		1	CP210	M		O					
181-31293- 21		1	CP210	M		O					
181-31294- 9		1	CF325	M		O					
181-31294- 10		1	CF325	M		O					
181-31296		2	CF326	M		O					
181-31297		2	CF327	M		O					
181-31303- 3		1	CJ378	M		O					
181-31303- 4		1	CJ378	M		O					
181-31303- 11		1	CJ378	M		O					
181-31303- 12		1	CJ378	M		O					
181-31304- 1		1	BZ247	M		O					
181-31304- 2		1	BZ247	M		O					
181-31305- 31		1	CQ105	M		O					
181-31307- 3		1	DP287	M		O					
181-31307- 5		1	DP287	M		O					
181-31307- 7		1	DP287	M		O					
181-31307- 11		1	DP287	M		O					
181-31307- 21		1	DP287	M		O					
181-31309- 5		1	CJ380	M		O					
181-31310- 1		1	DQ 9								
181-31310- 2		1	DQ 9								
181-31310- 3		1	DQ 9	M		O					
181-31310- 4		1	DQ 9	M		O					
181-31310- 7		1	DQ 9	M		O					
181-31310- 8		1	DQ 9	M		O					
181-31310- 13		1	DQ 9	M		O					
181-31310- 14		1	DQ 9	M		O					
181-31310I- 1		1	CQ115								
181-31310I- 2		1	CQ115	M		O					
181-31310I- 3		1	CQ115								
181-31310I- 4		1	CQ115	M		O					
181-31310I- 11		1	CQ115	M		O					
181-31310I- 13		1	CQ115	M		O					
181-31311- 1		1	AX 8	M		O					
181-31311- 2		1	AX 8	M		O					
181-31312- 1		1	AW309	M		O					
181-31312- 2		1	AW309	M		O					
181-31313- 5		1	AU136	M		O					
181-31313- 8		1	AU136	M		O					
181-31313- 51		1	AU136	M		O					
181-31313- 62		1	AU136	M		O					
181-31315- 1		1	CF330	M		O					
181-31315- 2		1	CF330	M		O					
181-31169		2									
181-31322		1	CJ384	M		O					
181-31324- 1		1	CF331	M		O					
181-31324- 2		1	CF331	M		O					
181-31330- 3	43	1									
181-31330- 5	43 - 35	2									
	43 - 60										
181-31331	42 - 81	2									
181-31332- 1	43 - 34	2									
	43 - 59										
181-31332- 2	43	2									
181-31335- 7		1	AZ 29	M		O					
181-31335- 8		1	AZ 29	M		O					
181-31335- 9		1	AZ 29	M		O					
181-31335- 11		1	AZ 29	M		O					
181-31335- 12		1	AZ 29	M		O					
181-31335- 13		1	AZ 29	M		O					
181-31335- 14		1	AZ 29	M		O					
181-31335- 26		1	AZ 29	M		O					
181-31335- 52		1	AZ 29								
181-31335-101		1	AZ 29	M		O					
181-31335-102		1	AZ 29	M		O					
181-31336		1									
181-31336- 3		1									
181-31336- 7		1		M		O					
181-31336- 21	39 - 27	1									
181-31339- 1		1	CJ389								
181-31339- 2		1	CJ389								
181-31347- 1		1	BF415								
181-31347- 2		1	BF415								
181-31347- 11		1	BF415	M		O					
181-31347- 12		1	BF415	M		O					
181-31348- 1		1	BF416								
181-31348- 2		1	BF416								
181-31348- 11		1	BF416	M		O					
181-31348- 12		1	BF416	M		O					
181-31349	59	2									
	59A										
181-31350- 1		1	DO 10	M		O					
181-31350- 2		1	DO 10	M		O					
181-31350- 3		1	DO 10	M		O					
181-31350- 4		1	DO 10	M		O					
181-31351- 1		1	CF337	M		O					
181-31351- 2		1	CF337	M		O					
181-31354- 1		1	CC386	M		O					
181-31354- 2		1	CC386	M		O					
181-31355- 1		1	BA 91								
181-31355- 2		1	BA 91								
181-31355- 3		1	BA 91	M		O					
181-31355- 4		1	BA 91	M		O					
181-31360- 1		1	CJ391	M		O					
181-31360- 3		1	CJ391	M		O					
181-31361- 1		1	CF340								
181-31361- 2		1	CF340								
181-31361- 11		1	CF340	M		O					
181-31361- 12		1	CF340	M		O					
181-31362- 1		1	CF341								
181-31362- 2		1	CF341								
181-31363- 1		1	CF342	M		O					
181-31363- 2		1	CF342	M		O					
181-31365- 1		1	CJ692	M		O					
181-31365- 2		1	CJ692	M		O					
181-31366- 1		1	CF343	M		O					
181-31366- 2		1	CF343	M		O					
181-31368- 3		1	CC387	M		O					
181-31368- 5		2	CC387	M		O					
181-31368- 6		1	CC387	M		O					
181-31368- 7		1	CC387	M		O					
181-31368- 9		2	CC387	M		O					
181-31368- 12		1	CC387	M		O					
181-31370		2	CC389	M		O					
181-31371- 1		1	CF345	M		O					
181-31371- 2		1	CF345	M		O					
181-31372- 1		1	CF346	M		O					
181-31372- 2		1	CF346	M		O					
181-31375		2	CJ395	M		O					
181-31374- 1		1	CF347								
181-31374- 2		1	CF347								
181-31374- 3		1	CF347	M		O					
181-31374- 4		1	CF347	M		O					
181-31375		2	BF424	M		O					
181-31376- 1		1	BF425	M		O					
181-31376- 2		1	BF425	M		O					
181-31377	39 - 21	1							R	1560-370-8274	ANAA
181-31378	39	1							R	1560-370-8275	ANAA
181-31379- 3		2	BZ258	M		O					
181-31379- 5		2	BZ258	M		O					
181-31379- 7		2	BZ258	M		O					
181-31380- 1		1	CJ396	M		O					
181-31380- 2		1	CJ396	M		O					
181-31380- 3		1	CJ396	M		O					
181-31381- 5		1	CQ138	M		O					
181-31381- 6		1	CQ138	M		O					
181-31381- 7		1	CQ138	M		O					
181-31381- 8		1	CQ138	M		O					
181-31381- 9		1	CQ138	M		O					
181-31381- 10		1	CQ138	M		O					
181-31381-101		1	CQ138	M		O					
181-31381-102		1	CQ138	M		O					
181-31386		2	BC113	M		O					
181-31387- 1		1	CF349	M		O					
181-31387- 2		1	CF349	M		O					
181-31388- 1		1	CF350	M		O					
181-31388- 2		1	CF350	M		O					
181-31390		1	CJ398	M		O					
181-31390- 3		1	CJ398	M		O					
181-31390- 5		1	CJ398	M		O					
181-31391- 1		1	CJ399	M		O					
181-31391- 2		1	CJ399	M		O					
181-31392- 1		1	BZ278	M		O					
181-31392- 2		1	BZ278	M		O					
181-31393		1	CC391	M		O					
181-31394		1	BZ279	M		O					
181-31395		1	BZ246	M		O					
181-31396- 3		1	CC392	M		O					
181-31396- 5		1	CC392	M		O					
181-31397- 3		1	BZ280	M		O					
181-31397- 7		1	BZ280	M		O					
181-314101- 5		1	CC395	M		O					
181-314102- 6		1	BC 62	M		O					

PART NUMBER	FIGURE AND INDEX	TOTAL QTY.	MICRO-FILM NUMBER	MAINTENANCE CODE DATA: SOURCE CODE	INSTL. CAPABILITY	PRE-INSTL. CAPABILITY	RECOVERABILITY	SUPPORT EQUIPMENT	FEDERAL STOCK NUMBER DATA: COGNIZANCE CODE	FEDERAL STOCK NUMBER	MFG. CODE (TSMC)
181-314102- 10		1	BC 62	M		O					
181-314102- 12		1	BC 62	M		O					
181-314103- 2		1	CC396	M		O					
181-314104- 2		1	CC397								
181-314116		1	CC401	M		O					
181-314117		2	CC402								
181-314141- 1		1	CJ406	M		O					
181-314141- 2		1	CJ406								
181-314141- 3		1	CJ406	M		O					
181-314141- 4		1	CJ406	M		O					
181-314143- 1		1	CJ407	M		O					
181-314143- 2		1	CJ407	M		O					
181-314144- 1		1	CJ408								
181-314145		1	AX 29	M		O					
181-314147		2	CD 81	M		O					
181-314150		4	CD 84	M		O					
181-314151		2	CD 85	M		O					
181-314152		2	DK 99	M		O					
181-31419- 1	49 - 7	1	CJ409	M		O					
181-31419- 2	49 - 8	1	CJ409	M		O					
181-31424- 5		1	AT 65	X2							
181-31424- 6		1	AT 65	X2							
181-31429- 1		1	BC 43	X2							
181-31429- 2		1	BC 43	X2							
181-31444- 1		1	CJ412	M		O					
181-31444- 2		1	CJ412	M		O					
181-31445- 5		1	AP 75	M		O					
181-31445- 51		1	AP 75	M		O					
181-31445- 53		1	AP 75	M		O					
181-31469		1	AX 53	M		O					
181-31470- 3		1	CQ 87	X2							
181-31470- 4		1	CQ 87	X2							
181-31471- 3		1	BZ281	M		O					
181-31471- 4		1	BZ281	M		O					
181-31472- 1		1	CF368	M		O					
181-31472- 2		1	CF368	M		O					
181-31479- 5		1	AP261	M		O					
181-31479- 7		1	AP261	M		O					
181-31479- 11	48 - 14	1	AP261								
181-31479- 13		1	AP261	M		O					
181-31479- 31	48	1	AP261	M		F					
181-31483- 3		1	AX234	M		O					
181-31483- 5		1	AX234	M		O					
181-315113- 3		1	CE249	M		O					
181-315113- 7		2	CE249	M		O					
181-315113- 11		2	CE249	M		O					
181-315113- 13		1	CE249	M		O					
181-315114	33 - 39	1							R	1680-373-6569	ANAA
181-315114- 3		2		X1							
181-315114- 5		2		X1							
181-315114- 7	33	2		X1							
181-315114- 9	33	2		X1							
181-315114- 11	33 - 39	1							R	1680-346-1083	ANAA
181-315169	48	1									
181-315183		2	CF391	M		O					
181-315185- 3		1	CJ432	M		O					
181-315185-101	44 - 12	1	CJ432								
181-315186- 3		1	CJ433	M		O					
181-315186-101	44 - 13	1									
181-315189	44	1									
181-315190	44 - 15	1									
181-31564- 3	48 - 12	1							R	5340-037-2463	ANAA
181-316117- 1		1	CF424	M		O					
181-316117- 2		1	CF424	M		O					
181-316136- 1		1	CD124	M		O					
181-316136- 2		1	CD124	M		O					
181-316137- 1		1	AZ123	M		O					
181-316137- 2		1	AZ123	M		O					
181-316138- 1		1	CD125	M		O					
181-316138- 2		1	CD125	M		O					
181-316139- 1		1	CD126	M		O					
181-316139- 2		1	CD126	M		O					
181-316140- 1		1	CD127	M		O					
181-316140- 2		1	CD127	M		O					
181-316142- 1		3	CD129	M		O					
181-316142- 2		3	CD129	M		O					
181-316143- 1		2	CD130	M		O					
181-316143- 2		2	CD130	M		O					
181-316144- 1		1	CS221	M		O					
181-316144- 2		1	CS221	M		O					
181-316145- 1		1	CF430	M		O					
181-316151- 1		1	CK 8	M		O					
181-316151- 2		1	CK 8	M		O					
181-316152- 1		1	CK 9	M		O					
181-316152- 2		1	CK 9	M		O					
181-316153- 1		1	CK 12	M		O					
181-316153- 2		1	CK 12	M		O					
181-316174- 1	73 - 11	1	CS219	M		O					
181-316174- 2	73	1	CS219	M		O					
181-316176- 1	73 - 12	1	CS216	M		O					
181-316176- 2	73	1	CS216	M		O					
181-316177- 1	73 - 13	1	CS197	M		O					
181-316177- 2		1	CS197								
181-316177- 11		1	CS197	M		O					
181-316177- 12	73	1	CS197	M		O					
181-316178- 1	73 - 14	1	CS213	M		O					
181-316178-102	73	1	CS213	M		O					
181-316188		1	CD146	M		O					
181-316189- 3		1	CD147	M		O					
181-316189- 4		1	CD147	M		O					
181-316194- 1		1	CD150	M		O					
181-316194- 2		1	CD150	M		O					
181-316198		2	CF444	M		O					
181-316218- 1		1	CD160	M		O					
181-316218- 2		1	CD160	M		O					

PART NUMBER	FIGURE AND INDEX	TOTAL QTY.	MICRO-FILM NUMBER	MAINTENANCE CODE DATA: SOURCE CODE	INSTL. CAPABILITY	PRE-INSTL. CAPABILITY	RECOVERABILITY	SUPPORT EQUIPMENT	FEDERAL STOCK NUMBER DATA: COGNIZANCE CODE	FEDERAL STOCK NUMBER	MFG. CODE (TSMC)
181-316219- 1		1	CF455	M		O					
181-316219- 2		1	CF455	M		O					
181-316220- 1		1	CF456	M		O					
181-316220- 2		1	CF456	M		O					
181-316222- 1		1	CD161	M		O					
181-316222- 2		1	CD161	M		O					
181-316223- 3		1	CD162	M		O					
181-316223- 4		1	CD162	M		O					
181-316223- 5		1	CD162	M		O					
181-316223- 6		1	CD162	M		O					
181-316224		1	CF457	M		O					
181-316224- 3		1	CF457	M		O					
181-316224- 5		1	CF457	M		O					
181-316224- 11		1	CF457								
181-316240		2	CD170	M		O					
181-316241- 1		1	CF458	M		O					
181-316241- 2		1	CF458	M		O					
181-316242- 1		1	CD171								
181-316242- 2		1	CD171								
181-316242- 3		1	CD171	M		O					
181-316242- 4		1	CD171	M		O					
181-316243		2	CE250	M		O					
181-316244		1	AW299	M		O					
181-316244- 3		1	AW299	M		O					
181-316244- 5		1	AW299	M		O					
181-316244- 7		1	AW299	M		O					
181-316246		1	CF459	M		O					
181-316259- 1		1	CD176	M		O					
181-316259- 2		1	CD176	M		O					
181-31651- 3		1	AT 52	M		O					
181-31651- 4		1	AT 52	M		O					
181-31651- 5		1	AT 52	M		O					
181-31651- 6		1	AT 52	M		O					
181-31651- 10		1	AT 52	M		O					
181-31651- 11		1	AT 52	M		O					
181-31651-101		1	AT 52	M		O					
181-31651-102		1	AT 52	M		O					
181-31651-201		1	AT 52	M		O					
181-31651-203		1	AT 52	M		O					
181-31653- 1		1	CF472	M		O					
181-31653- 2		1	CF472	M		O					
181-31656- 1		1	BU 6	M		O					
181-31656- 2		1	BU 6	M		O					
181-31660- 1		1	BU 7	M		O					
181-31660- 2		1	BU 7	M		O					
181-31665- 3		1	CS178	M		O					
181-31665- 4		1	CS178	M		O					
181-31665- 5		1	CS178	M		O					
181-31665- 6		1	CS178	M		O					
181-31665- 9		1	CS178	M		O					
181-31665- 10		1	CS178	M		O					
181-31665- 11		1	CS178	M		O					
181-31665- 12		1	CS178	M		O					
181-31665- 13		1	CS178	M		O					
181-31665- 14		1	CS178	M		O					
181-31665- 15		1	CS178	M		O					
181-31665- 16		1	CS178	M		O					
181-31665- 51		1	CS178	M		O					
181-31665- 52		1	CS178	M		O					
181-31673- 3	72 - 27	1	CS177	X2					R	1560-697-3127	ANAA
181-31673- 4	72 - 28	1	CS177	X2					R	1560-697-3128	ANAA
181-31673- 5	72 - 27	1	CS177	X2							
181-31673- 6	72 - 28	1	CS177	X2							
181-31676- 1		1	CK 33	M		O					
181-31676- 2		1	CK 33	M		O					
181-31683- 1		1	CQ166	M		O					
181-31683- 2		1	CQ166	M		O					
181-31683- 3		1	CQ166	M		O					
181-31683- 4		1	CQ166	M		O					
181-31683- 5		1	CQ166	M		O					
181-31683- 6		1	CQ166	M		O					
181-31683- 7		1	CQ166	M		O					
181-31683- 8		1	CQ166	M		O					
181-31684		1	BS163								
181-31684- 3		1	BS163								
181-31684- 5		2	BS163	M		O					
181-31684- 7		1	BS163								
181-31684- 9		1	BS163	M		O					
181-31684- 10		1	BS163	M		O					
181-31684- 11		1	BS163	M		O					
181-31684- 13		1	BS163								
181-31684- 15		1	BS163	M		O					
181-31684- 17		1	BS163	M		O					
181-31684- 51		1	BS163	M		O					
181-31685- 3		1	AP 74	M		O					
181-31685- 5		1	AP 74	M		O					
181-31685- 7		1	AP 74	M		O					
181-31685- 8		1	AP 74	M		O					
181-31685- 11		1	AP 74	M		O					
181-31685- 51		1	AP 74	M		O					
181-31686- 11		1	BT202	M		O					
181-31686- 31		1	BT202	M		O					
181-31687- 1		1	CY 39	M		O					
181-31687- 2		1	CY 39	M		O					
181-31687- 11		1	CY 39	M		O					
181-31687- 12		1	CY 39	M		O					
181-31690- 5		1	CQ165	M		O					
181-31690- 6		1	CQ165	M		O					
181-31690- 9		2	CQ165	M		O					
181-31690- 11		1	CQ165	M		O					
181-31690- 12		1	CQ165	M		O					
181-31690- 13		1	CQ165	M		O					
181-31690- 14		1	CQ165	M		O					
181-31690- 15		1	CQ165								
181-31690- 16		1	CQ165								

PART NUMBER	FIGURE AND INDEX	TOTAL QTY.	MICRO-FILM NUMBER	MAINTENANCE CODE DATA: SOURCE CODE	INSTL CAPABILITY	PRE-INSTL CAPABILITY	RECOVERABILITY	SUPPORT EQUIPMENT	COGNIZANCE CODE	FEDERAL STOCK NUMBER DATA: FEDERAL STOCK NUMBER	MFG. CODE (TSMC)
181-31690- 19		1	CQ165	M		O					
181-31690- 20		1	CQ165	M		O					
181-31690-101		1	CQ165	M		O					
181-31690-102		1	CQ165	M		O					
181-31690-103		1	CQ165	M		O					
181-31690-104		1	CQ165	M		O					
181-31691- 9		1	CX162	M		O					
181-31691- 10		1	CX162	M		O					
181-31691- 11		1	CX162	M		O					
181-31691- 12		1	CX162	M		O					
181-31691- 17		1	CX162	M		O					
181-31691- 18		1	CX162	M		O					
181-31691- 19		1	CX162	M		O					
181-31691- 20		1	CX162	M		O					
181-31691- 21		1	CX162	M		O					
181-31691- 22		1	CX162	M		O					
181-31691- 23		1	CX162	M		O					
181-31691- 25		1	CX162	M		O					
181-31691- 26		1	CX162	M		O					
181-31691- 27		1	CX162	M		O					
181-31691- 29		1	CX162	M		O					
181-31691- 30		1	CX162	M		O					
181-31691- 31		1	CX162	M		O					
181-31691- 32		1	CX162	M		O					
181-31691- 37		1	CX162	M		O					
181-31691- 39		1	CX162	M		O					
181-31691- 41		1	CX162	M		O					
181-31691- 43		1	CX162	M		O					
181-31691- 45		1	CX162	M		O					
181-31691- 47		1	CX162	M		O					
181-31691- 51		1	CX162	M		O					
181-31691- 52		1	CX162	M		O					
181-31691-101		1	CX162	M		O					
181-31706- 3		1	DS 15	X1							
181-31706- 4		1	DS 15	X1							
181-31706- 5	76 - 16	1	DS 15	X2							
181-31706- 6	76	1	DS 15	X2							
181-31706- 7		2	DS 15	X1							
181-31706- 9		1	DS 15	X1							
181-31706- 10		1	DS 15	X1							
181-31706- 11	76 - 16	1	DS 15	X2							
181-31706- 12	76	1	DS 15	X2							
181-31706- 13		1	DS 15	X1							
181-31706- 14		1	DS 15	X1							
181-31706- 21	76	1	DS 15	X2							
181-31706- 22	76	1	DS 15	X2							
181-31728- 1		2		M		O					
181-31728- 2		2		M		O					
181-31729- 1		1	CG 2	M		O					
181-31729- 2		1	CG 2	M		O					
181-31743		1	CD184	M		O					
181-31744- 1		1	CG213								
181-31744- 2		1	CG213	M		O					
181-31744- 3		1	CG213	M		O					
181-31745- 1		1	CD185	M		O					
181-31745- 2		1	CD185	M		O					
181-31748- 1		2	CD186	M		O					
181-31748- 2		2	CD186	M		O					
181-31749- 1	77 - 13	1	CG 5	M		O					
181-31749- 2	77	1	CG 5	M		O					
181-31751- 1		1	CU 65	M		O					
181-31751- 2		1	CU 65	M		O					
181-31755- 1		1	CG 6								
181-31755- 2		1	CG 6								
181-31755- 11		1	CG 6	M		O					
181-31755- 12		1	CG 6	M		O					
181-31756- 1		1	AZ112	M		O					
181-31756- 2		1	AZ112	M		O					
181-31765- 1	77 - 49	1	CG 11	M		O					
181-31765- 2	77	1	CG 11								
181-31767- 1		1	AW 12	M		O					
181-31767- 2		1	AW 12	M		O					
181-31769- 1		1	CY 48	M		O					
181-31769- 2		1	CY 48	M		O					
181-31779- 1		2	DS 21	M		O					
181-31779- 2		2	DS 21	M		O					
181-31784- 1		2	CD197	M		O					
181-31784- 2		2	CD197	M		O					
181-31785- 1		1	CU 59	M		O					
181-31785- 2		1	CU 59	M		O					
181-31786- 1		1	CU 58	M		O					
181-31786- 2		1	CU 58	M		O					
181-31787- 1		1	CU 66	M		O					
181-31787- 2		1	CU 66	M		O					
181-31788		1	CT212	M		O					
181-31791		2	AW 7	M		O					
181-31792- 1		1	CG 17	M		O					
181-31792- 2		1	CG 17	M		O					
181-31796- 1		1	CD201	M		O					
181-31796- 2		1	CD201	M		O					
181-31797	76 - 18	1	CU274	M		O					
181-31797- 3		1	CU274	M		O					
181-31797- 4		1	CU274	M		O					
181-31797- 5	76 - 19	1	CU274	M		O					
181-31797- 7		1	CU274	M		O					
181-31797- 9		1	CU274	M		O					
181-31797- 11		2	CU274	M		O					
181-31805	52 - 2	1	CU297	X2							
181-31806	52	2		PI	F	O	S		R	1560-373-6579	ANAA
181-31806- 3	52 - 11	2		M		O			R	1560-345-6528	ANAA
181-31807	52 - 19	4	CG 19	M		O			R	1560-048-1074	ANAA
181-31808	52 - 12	6	CG 20	P1	F	O	C		R	1560-341-4575	ANAA
	52 - 39										
181-31808- 3	52	6	CG 20	X1							
181-31809- 3	50 - 57	1	CT216	P1	O	O	S		R	1560-373-6580	ANAA
181-31809- 4	50	1	CT216	P1	O	O	S		R	1560-373-6581	ANAA
181-31809- 5	53 - 2	1	CT216						R	1560-373-6582	ANAA
181-31809- 6	53	1	CT216						R	1560-373-6583	ANAA
181-31810	52 - 14	4	CD202	M		O					
	52 - 38										
181-318100- 3	63 - 37	1	CK 47	P1	F	O	S		R	1560-544-8411	ANAA
181-318101	63 - 35	4	CD203	M		F					
181-318102	63 - 38	1	CD204	P3	F	O	C		R	1560-048-1075	ANAA
181-318105	51 - 53	2	CG 21	M		O					
181-318106	51 - 51	2	CD206	M		O					
181-318106- 9		2	CD206	M		O					
181-318107	51 - 46	2	CG214	M		O					
181-318107- 3		2	CG214	M		O					
181-318109	51 - 40	2	CD207	M		O					
181-318115- 5		1	BY166								
181-318115- 17		1	BY166								
181-318115- 19		1	BY166								
181-318115- 43	63 - 14	1	BY166	M		O					
181-318115- 45	63 - 12	1	BY166	M		O					
181-318115- 46	63 - 13	1	BY166	M		O					
181-318115- 47	63 - 15	1	BY166	M		O					
181-318115- 49		1	BY166								
181-318115- 51	63 - 17	1	BY166	M		O					
181-318115- 53		1	BY166								
181-318115- 57	43 -117	1	BY166								
181-318115- 59	63 - 6	1	BY166								
181-318115- 61	63 - 16	1	BY166	M		O					
181-318115- 65		1	BY166	M		O					
181-318115- 69	63 - 7	1									
181-318115-117		1	BY166								
181-318115-143		1	BY166	M		O					
181-318115-145		1	BY166	M		O					
181-318115-146		1	BY166	M		O					
181-318115-147		1	BY166	M		O					
181-318115-149		1	BY166								
181-318115-151		1	BY166	M		O					
181-318115-153		1	BY166								
181-318115-157		1	BY166	M		F					
181-318115-159		1	BY166								
181-318115-161		1	BY166	M		O					
181-318115-165		1	BY166	M		O					
181-31812- 51		1	CU285								
181-318124		1	DG291								
181-318127	43 - 12	9									
	48										
181-318129	43 - 7	1									
181-318133		2	CD216	M		O					
181-318135	52 - 30	2	CD217	P1	F	O	C		R	1560-341-4576	ANAA
181-318137		1	CK 52								
181-318139	51 - 13	2	CD218	P	F	O	C		R	1560-544-8412	ANAA
181-318139- 3		2	CD218	M		O					
181-31822	52 - 25	1	AX198	M		F			R	9320-513-4337	GB90
181-31822- 11	52 - 25	1	AX198	M		F			R	9320-663-5114	GB90
181-31825- 1	52	1	CD224	M		O					
181-31825- 2	52	1	CD224	M		O					
181-31825- 3		1	CD224	M		O					
181-31828	52 - 27	2	CD225	P1	F	O	S		R	1560-370-8276	ANAA
181-31851-101		1	AY184	U							
181-31851-111		1	AY184	U							
181-31851-201		1	AY184	U							
181-31851-211		1	AY184	U							
181-31851-221		1	AY184	U							
181-31852- 3	50 - 22	1	AY180	M		F					
181-31852- 4	50 - 18	1	AY180	M		F					
181-31852- 5	50 - 24	1	AY180	M		F					
181-31852- 6	50 - 17	1	AY180	M		F					
181-31852- 7	50 - 13	2	AY180	M		F					
	50 - 25										
181-31852- 9	50 - 11	2	AY180	M		F					
	50 - 38										
181-31852- 11	50 - 16	1	AY180	M		F					
181-31852- 13	50 - 15	1	AY180	M		F					
181-31852- 15	50	1	AY180	M		F					
181-31852- 17	50	1	AY180	M		F					
181-31852- 19	50	1	AY180	M		F					
181-31852- 21	50 - 14	2	AY180	M		F					
181-31852- 23		2	AY180	M		O					
181-31852-151	50	1	AY180	A		O					
181-31852-301	50	1	AY180	A		O					
181-31852-401	50	1	AY180	A		O					
181-31852-451	50	1	AY180	A		O					
181-31852-461	50	1	AY180	A		O					
181-31853- 9		1	BX149								
181-31853- 4		1	BX149	M		O					
181-31853- 5		1	BX149	M		O					
181-31853- 6		1	BX149	M		O					
181-31853- 9		2	BX149	M		O					
181-31853- 13		1	BX149	M		O					
181-31853-151	50 - 19	1	BX149	X2							
181-31853-301	50	1	BX149	X2							
181-31853-401	50	1	BX149	X2							
181-31853-551	50	1	BX149	X2							
181-31853-801	50	1	BX149	X2							
181-31854	50 - 3	1									
181-31854- 11	50 - 3	1	BE251	P1	F	O	S		R	1560-217-3024	ANAA
181-31855- 1	50 - 23	1	CT200	P1	F	O	C		R	1560-048-1083	ANAA
181-31855- 2	50 - 12	1	CT200	P1	F	O	C		R	1560-048-1084	ANAA
181-31856	50 - 21	1	CT198	P1	O	O	S		R	1560-037-2466	ANAA
181-31856- 3	50	1	CT198	X1							
181-31857- 3		1	BR 47								
181-31857- 5		1	BR 47	M		O					
181-31857- 6		1	BR 47	M		O					
181-31857- 7		1	BR 47	M		O					
181-31857- 9		1	BR 47	M		O					
181-31857- 11		1	BR 47	M		O					

PART NUMBER	FIGURE AND INDEX	TOTAL QTY.	MICRO-FILM NUMBER	MAINTENANCE CODE DATA: SOURCE CODE	INST'L CAPABILITY	PRE-INST'L CAPABILITY	RECOVERABILITY	SUPPORT EQUIPMENT	COGNIZANCE CODE	FEDERAL STOCK NUMBER DATA: FEDERAL STOCK NUMBER	MFG. CODE (TSMC)
181-31857- 13		1	BR 47	M		0					
181-31857- 15		1	BR 47	M		0					
181-31857- 17		1	BR 47	M		0					
181-31857- 31		1	BR 47								
181-31857- 51		1	BR 47	M		0					
181-31857-101		1	BR 47	M		0					
181-31857-151		1	BR 47	M		0					
181-31857-301		1	BR 47	M		0					
181-31858- 3		1	DJ292	M		0					
181-31858- 6		1	DJ292	M		0					
181-31858- 7		1	DJ292	M		0					
181-31858- 8		1	DJ292	M		0					
181-31859- 1		1	AW219	M		0					
181-31859- 2		1	AW219	M		0					
181-31861- 1		1	AQ 40								
181-31861- 2		1	AQ 40								
181-31861- 3		1	AQ 40	M		0					
181-31861- 4		1	AQ 40	M		0					
181-31864		1	CK 90	M		0					
181-31866- 3		1	CK 90	M		0					
181-31865		2	CD228	M		0					
181-31866		1	CK 60								
181-31866- 3		1	CK 60	M		0					
181-31867	50 - 6	1	CK 61	P1	0	0	S		R	1560-373-6585	ANAA
181-31868- 1		1	CT175	M		0					
181-31868- 2		1	CT175	M		0					
181-31869	50 - 1	1	CD229	M		0					
181-31871- 21	33 - 29	1	CT220	M		0					
181-31872- 1		1	CD230	M		0					
181-31872- 2		1	CD230	M		0					
181-31873		1	CT207								
181-31873- 3		1	CT207	M		0					
181-31874		1	CT206								
181-31874- 5		1	CT206	M		0					
181-31874- 6		1	CT206	M		0					
181-31874- 8		1	CT206	M		0					
181-31874- 51		1	CT206	M		0					
181-31874- 52		1	CT206								
181-31874- 62		1	CT206	M		0					
181-31877- 1	50 - 31	1	CT226	M		0					
181-31877- 2	50 - 9	1	CT226	M		0					
181-31878		1		M		0					
181-31879		1	CG 37	M		0					
181-31881- 1		1	CD232	M		0					
181-31881- 2		1	CD232	M		0					
181-31882- 1		1	CG 38	M		0					
181-31882- 2		1	CG 38	M		0					
181-31883- 1		1	AY112	M		0					
181-31883- 2		1	AY112	M		0					
181-31884		1	CK 62	M		0					
181-31885		1	CK 63	M		0					
181-31885- 3		1	CK 63	M		0					
181-31886- 1		1	CK 89	M		0					
181-31886- 2		1	CK 89	M		0					
181-31887- 1		1	DG 3	M		0					
181-31887- 2		1	DG 3	M		0					
181-31887- 4		1	DG 3	M		0					
181-31888- 1	50 - 35	1	CK 64	M		0					
181-31888- 2	50 - 8	1	CK 64	M		0					
181-31889- 1		1	CD233								
181-31889- 2		1	CD233								
181-31889- 3		1	CD233	M		0					
181-31889- 4		1	CD233	M		0					
181-31890- 1	50 - 26	1	CT218	M		0					
181-31890- 2	50 - 10	1	CT218	M		0					
181-31891	50	1	CT213	A		F					
181-31891- 3	50 - 4	1	CT213	M		F					
181-31891- 4	50	1	CT213	M		F					
181-31891- 5	50 - 5	1	CT213	M		F					
181-31891- 6	50	1	CT213	M		F					
181-31892		1	CT181								
181-31892- 3		1	CT181	M		0					
181-31892- 5		1	CT181	M		0					
181-31892- 7		1	CT181								
181-31892- 9		1	CT181								
181-31965- 2		1	CG 11	M		0					
181-33031		1	DM 78								
181-33501		1	DQ232								
181-33513		1	DS 22								
181-33565		1	DJ162								
181-33614		1	OP267								
181-34121- 3	38 - 13	1	CT122	X1							
181-34121- 5	38 - 11	1	CT122	P2	0	0	S		R	1560-048-1153	ANAA
181-34122- 3	38	1	AU 85	X1							
181-34122- 5	38 - 12	1	AU 85	P2	0	0	S		R	1560-048-1154	ANAA
181-34123	38 - 9	3	CD262	M		0					
	38 - 17										
181-34124	38	2	CD263	M		0					
181-34131- 3	38 - 5	1	CT121	X1							
181-34131- 5	38 - 3	1	CT121	P2	0	0	S		R	1560-048-1155	ANAA
181-34132- 3	38	1	CT172								
181-34132- 5	38 - 4	1	CT172	P2	0	0	S		R	1560-048-1156	ANAA
181-34210- 3	43 -106	1	CT188	P1	F	0	S		R	1630-373-6597	ANAA
181-34214		1	CD264	M		0					
181-34215	43 -110	1	CG 87	P1	F	0	S		R	1560-048-1157	ANAA
181-34216	43 -109	1	CG 88	P1	F	0	S		R	1560-048-1158	ANAA
181-34217	43 -111	12	CG 89	M		0					
181-34301	40 - 1	1	BU129	P1					P	1560-048-1159	ANAA
181-34301- 3		1	BU129	X1							
181-34301- 5		1	BU129	X1							
181-34301- 7		1	BU129	X1							
181-34301- 9		1	BU129	M		0					
181-34301- 11		1	BU129	M		0					
181-34301- 13		1	BU129	M		0					
181-34301- 15		1	BU129	M		0					
181-34301- 17		1	BU129	M		0					
181-34301- 19		1	BU129	M		0					
181-34301- 21		1	BU129	M		0					
181-34301- 23		1	BU129	M		0					
181-34301- 25		1	BU129	M		0					
181-34301- 27		1	BU129	M		0					
181-34301- 29		3	BU129	M		0					
181-34301- 31		1	BU129	M		0					
181-34301- 33		1	BU129	M		0					
181-34301- 35		1	BU129	M		0					
181-34301- 37		1	BU129	M		0					
181-34301- 39		1	BU129	M		0					
181-34301- 41		1	BU129	M		0					
181-34301- 43		1	BU129	M		0					
181-34301- 45		1	BU129	M		0					
181-34301- 47		1	BU129	M		0					
181-34301- 49		1	BU129	M		0					
181-34301- 51		1	BU129	M		0					
181-34301- 53		1	BU129	M		0					
181-34301- 55		1	BU129	M		0					
181-34301- 57		1	BU129	M		0					
181-34301- 59		1	BU129	M		0					
181-34301- 61		1	BU129	M		0					
181-34301-101	40	1	BU129								
181-34303	40 - 2	1	CK150	P1	F	0	S		R	1560-048-1160	ANAA
181-34303- 3	40 - 3	1	CK150								
181-34304	40 - 6	1	CK151	P1	F	0	S		R	1560-048-1161	ANAA
181-34305	40 - 10	1	CK152	P1	F	0	S		R	1560-048-1162	ANAA
181-34306	40 - 9	1	CG 90	P1	F	0	S		R	1560-048-1163	ANAA
181-34307	40 - 15	4	CG 91	P1	F	0	S		R	1560-048-1164	ANAA
181-34309		1	CD265	M		0					
181-34325		1	DP119	M		0					
181-34351- 2		1									
181-34352- 1	33 - 5	1	CK153	P1	F	0	S		R	1560-048-1167	ANAA
181-34352- 2	33 - 6	1	CK153	P1	F	0	S		R	1560-048-1168	ANAA
181-34352- 3		1	CK153	X1							
181-34352- 4		1	CK153	X1							
181-34352- 5		2	CK153	X1							
181-34501- 20	66	1	DQ128	U							
181-34502- 3	66 - 5	1	CT145	X1							
181-34502- 5	66	1	CT145	P1	F	0	S		R	1560-048-1170	ANAA
181-34503- 3		1	CT129	X1							
181-34505	66 - 17	1	DJ166	P1	F	0	R		R	1650-219-2105	ANAA
	141 -107										
181-34506	66 - 3	1	CD266	M		0					
181-34507	66 - 43	2	CG 92	P	F	0	C		R	1560-607-7926	ANAA
181-34509		1	CD267	P	F	0	S		R	1620-373-6598	ANAA
181-34511- 3	66	1	CT151	X1							
181-34511- 5	66 - 46	1	CT151	P1	F	0	S		R	1560-373-6599	ANAA
181-34512	66 - 62	1	CK155	P1					R	1620-370-8262	ANAA
181-34513	66 - 58	1	CK156	P1					R	1620-370-8283	ANAA
181-34515- 10	66 - 18	1	CG 93	P1					R	1560-698-2744	ANAA
181-34516- 3	66 - 21	1	CT159	X1							
181-34516- 5	66	1	CT159	P1					R	1560-031-4730	ANAA
	200 - 34										
181-34520	64 - 96	1	CK157	P1	F	0	S		R	1560-048-1172	ANAA
	67										
181-34523	67 - 6	1	CG 94	P1					R	1560-048-1173	ANAA
181-34524	67 - 7	1	CG224	P1					R	1560-048-1174	ANAA
181-34524- 3	67	1	CG224	M		0					
181-34525	67 - 11	1	CG 95	P	F	0	S		R	1560-511-1389	ANAA
181-34526	67 - 1	1	CG 96	P	F	0	S		R	5340-531-7736	ANAA
181-34527	67 - 10	2	CD268	M		0					
181-34528	66	1									
181-34530	65	1	CD269	A		F					
	65 - 29	1									
	200 - 35										
181-34530- 11	65	1	AW161	A		F					
	65 - 30	1									
181-34531- 3		1	AV 46	X1							
181-34531- 5	65 - 38	1									
181-34532	65 - 42	1									
181-34533	38 - 19	1	CK158	P1	F	0	S		R	1560-373-6601	ANAA
181-34534	65 - 37	1									
181-34535	65 - 78	1									
181-34536	38 - 20	1	CD272	M		0					
181-34537	200 - 26	1									
181-34537- 3	64 - 73	1	CT183	P1	F	0	S		R	1560-031-4731	ANAA
181-34537- 11	64	1	CT183	P1	F	0	S		R	1560-338-0979	ANAA
181-3454	67 - 21	1	AW151	M		0					
181-34543	65 - 27	1		P	F	0	S				
181-34544- 1		1	AW262	A		F					
181-34544- 3	65 - 28	1	AW262	P	F	0	S		R	1560-048-1177	ANAA
181-34544- 5	65 - 28	1	AW262	P	F	0	S		R	1560-333-7846	ANAA
181-34544-101	65	1	AW262	A		F					
181-34544-201	65	1	AW262	A		F					
181-34546	67 - 20	1	CG 99	P					R	1560-048-1178	ANAA
181-34547	65 - 1	1	AW 55	P	F	0	S		R	1680-373-6603	ANAA
181-34549	151 - 13	1	AW157	M		0					
181-34549- 3		1	AW157	M		0					
181-34549- 5		1	AW157	M		0					
181-34549- 7		1	AW157	M		0					
181-34549- 9		1	AW157	M		0					
181-34550	64 - 98	1	AW199	P1	F	0	S		R	1560-048-1179	ANAA
	65 - 11										
	67										
181-34553	67 - 16	1	AW 42	M		0					
181-34553- 3	67	1	AW 42	X1							
181-34556- 1	65 - 19	1	AW 73	P1	F	0	C		R	1560-031-4733	ANAA
181-34557		1	CG100	M		0					
181-34558		1	CG101	M		0					
181-34559- 10	151	1	AW159	A		0					
181-34560	151 - 9	1	AW 66	M		0					
181-34561- 11	64	1		A		F					
181-34561-101	64	1		A		F					

PART NUMBER	FIGURE AND INDEX	TOTAL QTY.	MICRO-FILM NUMBER	MAINTENANCE CODE DATA: SOURCE CODE	INSTL CAPABILITY	PRE-INSTL CAPABILITY	RECOVERABILITY	SUPPORT EQUIPMENT	FEDERAL STOCK NUMBER DATA: COGNIZANCE CODE	FEDERAL STOCK NUMBER	MFG. CODE (TSMC)
181-34562	64 - 67	1	CT160	P1	0	0	S		R	1560-341-4579	ANAA
181-34563- 3	64	1	CK161	X1							
181-34563- 5	64 - 85	1	CK161	P1	F	0	S		R	1560-048-1180	ANAA
181-34564- 1	63 - 20	1	AW141	P1	F	0	S		R	1560-028-0966	ANAA
181-34564- 3		1	AW141	X1							
181-34565	64 - 69	2	CG102	M		0					
181-34567	64 - 74	1	CK162	P1	F	0	S		R	1560-511-1397	ANAA
	144 - 40										
181-34567- 3		1	CK162	M		0					
181-34567- 5		1	CK162	M		0					
181-34567- 7		1	CK162	M		0					
181-34567- 9		1	CK162	M		0					
181-34567- 11		1	CK162	M		0					
181-34567- 13		1	CK162	M		0					
181-34567- 21		1	CK162	M		0					
181-34567-101	64	1	CK162	P	F	0	S		R	1560-511-1398	ANAA
181-34568	64 - 82	1	CG103	P	F	0	C		R	1560-048-1181	ANAA
181-34568- 3	64	1	CG103	M		0					
181-34571	64 - 46	1	CK164	P1	F	0	S		R	1630-373-6597	ANAA
	144 - 41										
181-34572		1	DG295								
181-34572- 3		1	CT189	X1							
181-34572- 5	144 - 42	1	CT189	P1	F	0	S		R	1560-048-1183	ANAA
181-34576- 1	64 - 28	1	CG104	M		0					
181-34576- 3	64 - 9	1	CG104	M		0					
181-34576- 5		1	CG104	M		0					
181-34576- 7		1	CG104	M		0					
181-34576- 9	64 - 31	1	CG104	M		0					
181-34576- 11	64 - 10	1	CG104	M		0					
181-34577	64 - 23	2	CG105	P	F	0	S		R	1560-048-1186	ANAA
181-34577- 3		2	CG105	M		0					
181-34577- 5		1	CG105	M		0					
181-34577- 7	64	1	CG105	M		0					
181-34578	64 - 21	1	CK165	P1	F	0	S		R	1560-373-6605	ANAA
181-34579	64 - 16	1	CK166	A		F					
181-34580	45 -125	16		M		0					
	45 -145										
181-34581	64 - 33	1	CK167	A		F					
181-34582	64 - 41	1	CK168	P1	F	0	S		R	1560-048-1187	ANAA
181-34583- 3	64 - 39	1	CK169	X1							
181-34583- 5	64 - 38	1	CK169	P1	F	0	S		R	1560-048-1188	ANAA
181-34701		1	DK 50								
181-39001- 11		1	CG286	U							
181-39005- 1	78 - 8	1	CG121	M		0					
181-39005- 2	78	1	CG121	M		0					
181-39006		1	DG 4								
181-39006- 1	78 - 6	1	CG122	M		0					
181-39006- 2	78	1	CG122	M		0					
181-39008- 5	78	1		M		0					
181-39008- 6	78	1		M		0					
181-39008- 51	78 - 27	1		M		0					
181-39008- 52	78	1		M		0					
181-39009	78 - 77	2	CD278	P1	F	0	C		R	1560-663-2017	ANAA
181-39011- 1	78	1	CU301	P	F	0	S		R	1560-348-7340	ANAA
181-39011- 2	78	1	CU301	P	F	0	S		R	1560-348-7345	ANAA
181-39011- 3		1	CU301	M		0					
181-39011- 4		1	CU301	M		0					
181-39011- 5		1	CU301								
181-39011- 6		1	CU301								
181-39011- 7	78	1	CU301	M		0					
181-39011- 8	78	1	CU301	M		0					
181-39011- 9		1	CU301								
181-39011- 10		1	CU301								
181-39011- 11	78 - 78	1	CU301	M		0					
181-39011- 12	78	1	CU301	M		0					
181-39011- 13	78 - 79	1	CU301	M		0					
181-39011- 14	78	1	CU301	M		0					
181-39012	78 - 81	2	CD279	P	F	0	C		R	1560-514-0186	ANAA
181-39013- 5	76 - 45	1	AV 79	M		0					
181-39013- 6	78	1	AV 79	M		0					
181-39013- 11	76	1	AV 79	A		0					
181-39013- 12	76	1	AV 79	A		0					
181-39014		2	CD280	M		0					
181-39015- 3	78 - 37	1	BP135	X2							
181-39015- 4	78	1	BP135	X2							
181-39015- 5		1	BP135								
181-39015- 6		1	BP135								
181-39015- 7	78	1	BP135	X2							
181-39015- 8	78	1	BP135	X2							
181-39016		2	CD281	M		0					
181-39017- 1	78 - 7	1	CG123	M		0					
181-39017- 2	78	1	CG123	M		0					
181-39018- 3	78 - 38	2	CD282	M		0					
181-39018- 5	78 - 39	6	CD282	M		0					
181-39019- 1		1	CG124	M		0					
181-39019- 2		1	CG124	M		0					
181-39020- 1		1	CK178	M		0					
181-39020- 2		1	CK178	M		0					
181-39020- 3		1	CK178	M		0					
181-39020- 4		1	CK178	M		0					
181-39020- 5		2	CK178	M		0					
181-39021- 1		1	CG125	M		0					
181-39021- 2		1	CG125	M		0					
181-39022- 1		1	CG126	M		0					
181-39022- 2		1	CG126	M		0					
181-39023- 1		1	CK179	M		0					
181-39023- 2		1	CK179	M		0					
181-39024- 1		1	CK180	M		0					
181-39024- 2		1	CK180	M		0					
181-39024- 3		1	CK180	M		0					
181-39024- 4		1	CK180	M		0					
181-39024- 5		1	CK180	M		0					
181-39024- 6		1	CK180	M		0					
181-39024- 7		1	CK180	M		0					
181-39024- 8		1	CK180	M		0					

PART NUMBER	FIGURE AND INDEX	TOTAL QTY.	MICRO-FILM NUMBER	MAINTENANCE CODE DATA: SOURCE CODE	INSTL CAPABILITY	PRE-INSTL CAPABILITY	RECOVERABILITY	SUPPORT EQUIPMENT	FEDERAL STOCK NUMBER DATA: COGNIZANCE CODE	FEDERAL STOCK NUMBER	MFG. CODE (TSMC)
181-39026- 1		1	CT176	M		0					
181-39026- 2		1	CT176	M		0					
181-39027- 1		1	CG128	M		0					
181-39027- 2		1	CG128	M		0					
181-39028- 1		1	CG129	M		0					
181-39028- 2		1	CG129	M		0					
181-39029- 1		1	CG130	M		0					
181-39029- 2		1	CG130	M		0					
181-39030	78 - 62	2	AW487	M		0			R	1560-048-1218	ANAA
181-39030- 3		2	AW487	M		0					
181-39030- 7		2	AW487	M		0					
181-39030- 9	78	2	AW487	M		0					
181-39030- 11		2	AW487	M		0					
181-39030- 13	78 - 66	2	AW487	P	F	0	C		R	1560-343-9114	ANAA
181-43034	204 - 1	1	CG139	A		F					
181-43035	204 - 7	1	CG140	M		0					
181-43035- 3		1	CG140	M		0					
181-43035- 5		1	CG140	M		0					
181-43035- 7		1	CG140	M		0					
181-43035- 9		1	CG140	M		0					
181-43035- 11		1	CG140	M		0					
181-43036	204 - 4	1	CD295	M		0			R	1720-514-2842	ANAA
181-43037	204 - 5	1	CG141	M		0			R	1560-048-1219	ANAA
181-43038	204 - 3	1	CG142	M		0					
181-43038- 3		1	CG142	M		0					
181-43038- 5		1	CG142	M		0					
181-43038- 7		1	CG142	M		0					
181-43704	204 - 18	1	CK193	M		0					
181-43704- 3		1	CK193	M		0					
181-43704- 5		1	CK193	M		0					
181-43713	204	1	CG146	M		0					
181-43714	204 - 14	1	BC139	M		0					
181-43714- 3		1	BC139	M		0					
181-43714- 5		1	BC139	M		0					
181-43714- 7		1	BC139	M		0					
181-43714- 9		1	BC139	M		0					
181-48026	94 -170	1	DJ 20	P					R	2910-037-2484	ANAA
181-48066	98 - 63	1	CD235	P3	F	0	C		R	1560-048-1226	ANAA
	99 - 88										
	100 -191										
181-48166	113	28		P1	F	0	S		R	1560-323-4119	ANAA
181-48227		2	BV 31	M		0					
181-48227- 13		1	BV 31	M		0					
181-48227- 15		1	BV 31	M		0					
181-48228		2	BV 34	M		0					
181-48228- 13	341 - 18	1	BV 34	M		0					
181-48228- 15	341 - 18	1		M		0					
181-48229		2		M		0					
181-48230- 3	117 - 17	2	CK229	P	F	0	S		R	1560-511-1400	ANAA
181-48231		1	BA 24	M		0					
181-48233		1	DJ180								
181-48235	117 - 23	2	DG 5	P1	F	0	S		R	5307-094-6729	ANAA
181-48249		2	CE131								
181-48270-101		1									
181-48276	117 - 24	2	CE133	M		0					
181-48277	117 - 4	2	CE134	M		0					
181-48277- 13	341 - 17	1									
181-48277- 15	341 - 17	1									
181-48307		1	DP 60								
181-48310		1	DP 61								
181-48310- 3	117 - 46	1	DP 61								
181-484101		1	BY225								
181-484102- 1	116 - 18	1	BY256	X1							
181-484102- 2	116	1	BY256	X1							
181-484103	118 - 1	2	BW 99	X1							
181-484103- 3		2	BW 99	M		0					
181-484103- 5		2	BW 99	M		0					
181-484103- 7		2	BW 99	M		0					
181-484103- 11		2	BW 99	M		0					
181-484103- 13		2	BW 99	M		0					
181-484103- 15		2	BW 99	M		0					
181-484103- 16		2	BW 99	M		0					
181-484103- 17		2	BW 99	M		0					
181-484103- 19		8	BW 99	M		0					
181-484103- 21	118 - 1	2	BW 99	X1							
181-484103- 23		1	BW 99	M		0					
181-484103- 25		1	BW 99	M		0					
181-484103- 27		1	BW 99	M		0					
181-484104	118 - 26	2	BW100	X1							
181-484104- 3		2	BW100	M		0					
181-484104- 5		2	BW100	M		0					
181-484104- 7		2	BW100	M		0					
181-484104- 9		2	BW100	M		0					
181-484104- 11		2	BW100	M		0					
181-484104- 13		4	BW100								
181-484104- 15		2	BW100								
181-484104- 19		4	BW100	M		0					
181-484104- 21		12	BW100	M		0					
181-484104- 23		2	BW100	M		0					
181-484104- 25		2	BW100	M		0					
181-484104- 27		16	BW100	M		0					
181-484104- 29		4	BW100	M		0					
181-484104- 33		2	BW100	M		0					
181-484104- 34		2	BW100	M		0					
181-484105	116 - 19	2	BW 75	M		0					
181-484105- 3		2	BW 75	M		0					
181-484105- 5		2	BW 75	M		0					
181-484105- 7		2	BW 75	M		0					
181-484105- 9		2	BW 75	M		0					
181-484105- 10		2	BW 75	M		0					
181-484105- 11		4	BW 75	M		0					
181-484105- 13		8	BW 75	M		0					
181-484106- 3		1	BW 90	X2							
181-484106- 4		1	BW 90	X2							
181-484107	116 - 56	2	BP130	M		0					

PART NUMBER	FIGURE AND INDEX	TOTAL QTY.	MICRO-FILM NUMBER	MAINTENANCE CODE DATA: SOURCE CODE	INST'L CAPABILITY	PRE-INST'L CAPABILITY	RECOVERABILITY	SUPPORT EQUIPMENT	FEDERAL STOCK NUMBER DATA: COGNIZANCE CODE	FEDERAL STOCK NUMBER	MFG. CODE (TSMC)
181-484107- 3		2	BP130	M		O					
181-484107- 5		2	BP130	M		O					
181-484107- 7		2	BP130	M		O					
181-484107- 9		2	BP130	M		O					
181-484107- 11		2	BP130	M		O					
181-484107- 13		2	BP130	M		O					
181-484107- 15		2	BP130	M		O					
181-484107- 17		2	BP130	M		O					
181-484107- 21		2	BP130	M		O					
181-484108		2	CL305	M		O					
181-484108- 3		2	CL305	M		O					
181-484108- 5		2	CL305	M		O					
181-484109		4	BV227	M		O					
181-484110		2	BG 50								
181-484110- 3		2	BG 50								
181-484110- 5		2	BG 50								
181-484110- 7		1	BG 50	M		O					
181-484110- 11	116 - 4	1	BG 50	M		O					
181-484112	118 - 51	2	AP 4	M		O					
181-484112- 3		2	AP 4	M		O					
181-484113	118 - 22	2	BV250	X1							
181-484114		4	BH215	M		O					
181-484114- 3		4	BH215	M		O					
181-484114- 5		4	BH215	M		O					
181-484115	119 - 15	2	BS 55	P1	F	O	S		R	1640-575-6051	ANAA
181-484115- 1		2	BS 55								
181-484115- 2		2	BS 55								
181-484115- 3		2	BS 55	M		O					
181-484115- 4		2	BS 55	M		O					
181-484115- 5		2	BS 55	M		O					
181-484115- 7		2	BS 55	M		O					
181-484115- 8		2	BS 55	M		O					
181-484115- 9		2	BS 55	M		O					
181-484115- 10		2	BS 55	M		O					
181-484115- 11		2	BS 55	M		O					
181-484115- 13	119 - 16	2	BS 55	M		F					
181-484116	116 - 75	2	BA 92	M		O					
181-484116- 3		2	BA 92	M		O					
181-484116- 5		2	BA 92	M		O					
181-484116- 7		2	BA 92	M		O					
181-484116- 21		2	BA 92	M		O					
181-484117	118 - 35	2	BV204	M		O					
181-484118	119 - 50	2	BV246	M		O					
181-484118- 3		2	BV246	M		O					
181-484119	116 - 73	2	BV248	M		F					
181-484119- 3		2	BV248	M		F					
181-484120	116 - 24 118 - 25	2	BC206	M		O					
181-484121	116 - 55 118 - 46	2	BC207	M		O					
181-484122	119 - 47	2	BU 34	P1	F	O	S		R	1640-315-5707	ANAA
181-484123	116 - 70	2	BV203	M		O					
181-484123- 3		2	BV203	M		O					
181-484124	116 - 9	2	BV223	M		O					
181-484124- 3		1	BV223								
181-484125	116 - 17	2	BJ 76	M		O					
181-484125- 3		2	BJ 76	M		O					
181-484125- 5		2	BJ 76	M		O					
181-484125- 11	116 - 17	2	BJ 76	M		O					
181-484126	116 - 79	1	CD 20								
181-484126- 1	117	1	CD 20	A		F					
181-484126- 2	117	1	CD 20	A		F					
181-484126- 3		1	CD 20	M		O					
181-484126- 4		1	CD 20	M		O					
181-484126- 5		1	CD 20	M		O					
181-484126- 6		1	CD 20	M		O					
181-484126- 7		2	CD 20	M		O					
181-484126- 9		2	CD 20	M		O					
181-484126- 11		4	CD 20	M		O					
181-484126- 21	117	1		A		O					
181-484126- 22	117	1		A		O					
181-484126- 31	117	1									
181-484126- 32	117	1									
181-484127- 3		2	BW 51	X1							
181-484127- 11	117 - 3	2	BW 51	X2							
181-484128- 3		2	BV284	X1							
181-484128- 11	117 - 16	2	BV284	X2							
181-484128- 21	117	1									
181-484129- 1		1	BW 77	M		O					
181-484129- 2		1	BW 77	M		O					
181-484130		2	BW 66	M		O					
181-484131	117 - 5	2	CG225	M		O					
181-484132		1	DQ 42								
181-484134		2	CP146	M		O					
181-484135- 1		1	BE255	P1	F	O	S		R	1640-315-5708	ANAA
181-484135- 2		1	BE255	P1	F	O	S		R	1640-315-5709	ANAA
181-484135- 3		1	BE255	M		O					
181-484135- 4		1	BE255	M		O					
181-484135- 5		1	BE255	M		O					
181-484135- 6		1	BE255	M		O					
181-484135- 7		2	BE255	M		O					
181-484135- 8		2	BE255	M		O					
181-484135- 9		2	BE255	M		O					
181-484137		2	BM204	M		O					
181-484137- 3		2	BM204	M		O					
181-484138- 1		1	CE 2	P1	F	O	S		R	1640-315-5711	ANAA
181-484138- 2		1	CE 2	P1	F	O	S		R	1640-315-5712	ANAA
181-484138- 3		1	CE 2	M		O					
181-484138- 4		1	CE 2	M		O					
181-484138- 5		2	CE 2	M		O					
181-484138- 7		1	CE 2	M		O					
181-484138- 8		1	CE 2	M		O					
181-484139- 1		1	AX 76	P1	F	O	S		R	1640-315-5713	ANAA
181-484139- 2		1	AX 76	P1	F	O	S		R	1640-315-5714	ANAA
181-484139- 3		1	AX 76	M		O					
181-484139- 4		1	AX 76	M		O					
181-484139- 5		2	AX 76	M		O					
181-484139- 7		1	AX 76	M		O					
181-484139- 8		1	AX 76	M		O					
181-484139- 9		1	AX 76	M		O					
181-484139- 10		1	AX 76	M		O					
181-484140	119 - 44	2	CG280	P1	F	O	S		R	1640-315-5715	ANAA
181-484141	116 - 38 119 - 39	2	CG281	X2							
181-484142- 1	116 - 27	2		X2							
181-484142- 2	116	2		X2							
181-484143		4	CG283	M		O					
181-484143- 1	116 - 30	1									
181-484143- 2	116	1									
181-484144- 1	116 - 34	2	CG284	X2							
181-484144- 2	116	2	CG284	X2							
181-484145- 1	116 - 25	2	CL306	A		F					
181-484145- 2	116 - 26	2	CL306	A		F					
181-484147		1	CK242	P	F	O	C		R	1560-511-1424	ANAA
181-484148	119 - 13	2		M		O					
181-484150	119 - 1	1	BJ 94								
181-484150- 1	116	1	BJ 94	X1							
181-484150- 2	116	1	BJ 94	X1							
181-484155		2	CD 27								
181-484155- 3	119 - 22	2	CD 27	M		O					
181-484155- 11	119	2	CD 27	P	F	O	S		R	1560-535-9674	ANAA
181-484156		2	CD 28								
181-484156- 3	119 - 29	2	CD 28	M		O					
181-484156- 11	119	2	CD 28	P	F	O	S		R	1560-535-9675	ANAA
181-484157- 3	119 - 21 119 - 28	4	CD 6	X1							
181-484158	119	4	BT120	P1	F	O	S				
181-484159	119	4	DR 55	X1							
181-484160	119	4	BP 62	M		O					
181-484161	119 - 30	4	BP 66	M		O					
181-484161- 11	119 - 30	1		M		O					
181-484162	119 - 31	4	BP 56	M		O					
181-484163	119	4	BP155	M		O					
181-484171		4	DS 57	M		O					
181-484172		1	CR 10								
181-484173	117	4	BM344	M		O					
181-484173- 3	117 - 41	4	BM344	M		O					
181-484175	117 - 44	4	BV279	M		O					
181-484177	117 - 36	4	BV274	P	F	O	C		R	1560-663-1701	ANAA
181-484178	117 - 8	4	CC109	X1							
181-484178- 3		4	CC109	P1	F	O	S		R	1560-697-8420	ANAA
181-484179	117 - 35	4	BG 52	M		O					
181-484180	117 - 40	8	CD 37	M		O					
181-484181	117 - 43	2	BV219	X2							
181-484182	117 - 14	2	CC110	M		O					
181-484182- 3		2	CC110	M		O					
181-484182- 5		4	CC110	M		O					
181-484182- 7		4	CC110	M		O					
181-484183		2	BV276	M		O					
181-484184		4		M		O					
181-484185	117 - 34	4	DS 89	M		O					
181-484185- 11	117	2									
181-484186- 3	119 - 23	2		X1					R	1560-510-1121	ANAA
181-484187	119	2		P1	F	O	S				
181-484188		2		M		O					
181-484189- 3	116	2		M		O					
181-484189- 5	116	2		M		O					
181-484190	117	4		M		O					
181-48451	118 - 50	1		X2							
181-48753	195 - 39	1	CT 70	M		O					
181-48753- 3		1	CT 70	M		O					
181-48753- 5		1	CT 70	M		O					
181-48753- 7		1	CT 70	M		O					
181-48756	195 - 41	1	CK256	M		O					
181-48756- 3		1	CK256	M		O					
181-48779- 3	196 - 10	1	BF456	P	F	O	C		R	1560-511-1437	ANAA
181-48783	195	1	CE148	M		O					
181-48787		1	AX200								
181-51006- 1	274	1	CG306	A		F					
181-51006- 2	274	1	CG306	A		F					
181-51007- 1	274 - 14	1	CK266	P1	F	O	S		R	1560-048-1292	ANAA
181-51007- 2	274 - 15	1	CK266	P1	F	O	S		R	1560-048-1292	ANAA
181-51008- 1	274	1	CG307	M		O					
181-51008- 2	274 - 24	1	CG307	M		O					
181-51011	317 - 5 318 - 66	2	CV 9	M		O					
181-51016	317 318	1	CV 8	M		O					
181-51017- 7		2	CE151	M		F					
181-51017- 10	274 - 4	2	CE151	M		F					
181-51020	278 - 30	1	CV 22	P1					R	1680-094-6729	ANAA
181-51020- 3		1	CV 22	M		O					
181-51020- 4		1	CV 22	M		O					
181-51020- 5		1	CV 22	M		O					
181-51020- 10	271 - 49	1	CV 22	M		O			R	1560-610-5167	ANAA
181-51025		1	CG311	M		O					
181-51027		1	CE153	M		O					
181-51030- 3		1	CM205	M		O					
181-51030- 21		1	CM205	M		O					
181-51032		2	DQ 11								
181-51032- 3	PG. 1003	1									
181-51032- 11	PG. 1003	2	DQ 11	M		O					
181-51032- 21	PG. 1003	2									
181-51036		1	CG313	M		O					
181-51036- 3		1	CG313	M		O					
181-51037- 3		1	BP261								
181-51037- 5		1	BP261	M		O					
181-51037- 10		1	BP261	M		O					
181-51041	240 - 2	1	BA 94	A		F					
181-51041- 3		1	BA 94	M		F					

PART NUMBER	FIGURE AND INDEX	TOTAL QTY.	MICRO-FILM NUMBER	MAINTENANCE CODE DATA: SOURCE CODE	INSTL CAPABILITY	PRE-INSTL CAPABILITY	RECOVERABILITY	SUPPORT EQUIPMENT	FEDERAL STOCK NUMBER DATA: COGNIZANCE CODE	FEDERAL STOCK NUMBER	MFG. CODE (TSMC)
181-51042- 3		1	CG314	M		F					
181-51043	223 - 7	1	CG315	M		F					
181-51048- 5		1									
181-51048- 7		1		M		O					
181-51048- 11		1									
181-51048- 21	223 - 26	1		M		O					
181-51049	223 - 22	1	CK270	M		O					
181-51049- 3		1	CK270	M		O					
181-51049- 5		1	CK270	M		O					
181-51049- 7		1	CK270	M		O					
181-51052	223 - 27	1	DG176								
181-51054- 5		1	CK271								
181-51058		2	CE156								
181-51083		1	CG326								
181-51128	271 - 48	1	CV 53	M		O					
	276 - 31										
181-51128- 3		1	CV 53	M		O					
181-51128- 5		1	CV 53	M		O					
181-51128- 7		1	CV 53	M		O					
181-51129	207 - 18	1	DL206								
181-51129- 10	233 - 19	1	DL206	A		F					
	278										
181-51129- 20	239	1	DL206	A		F					
	278										
181-51137	221 - 21	2	AW 40	M		O					
181-51139		3	BS164								
181-51139- 3		3	BS164								
181-51139- 5		4	BS164	M		O					
181-51139- 11	255 - 13	2	BS164	M		O					
	255 - 36										
	255 - 43										
181-51139- 21	255 - 29	1	BS164	M		O					
181-51802- 13	223 - 34	1	DQ261	M		F					
181-51802- 14		1	DQ261	M		F					
181-51802- 19	223 - 38	1	DQ261	M		F					
181-51802- 20		1	DQ261	M		F					
181-51802- 25	223 - 43	1	DQ261	M		F					
	295 - 36										
181-51802- 26		1	DQ261	M		F					
181-51802- 27	223 - 36	1	DQ261	M		F					
181-51802- 28		1	DQ261	M		F					
181-51802- 29		1	DQ261								
181-51802- 30		1	DQ261								
181-51802- 31	223 - 31	1	DQ261	M		F					
181-51802- 32		1	DQ261	M		F					
181-51802- 35	223 - 38	1	DQ261	M		F					
181-51802- 36		1	DQ261	M		F					
181-51802- 37	223 - 32	1	DQ261	M		F					
181-51802- 39	223 - 36	1		M		F					
181-51803- 11		1									
181-51853- 3		1		M		O					
181-52004-301		1	CA246	A		F					
181-52005-201		1	CA250								
181-52005-301		1	CA250	A		F					
181-52006	191 - 76	1	CT 16	P2	O	O	S		R	1560-941-4585	ANAA
181-52007	192 - 55	1	AU114	P2	O	O	S		R	1560-941-4586	ANAA
181-52007- 3		2	AU114	X1							
181-52009		1	BF458	M		O					
181-520101	193 - 29	1		P1	F	O	S		R	1560-048-1297	ANAA
	193 - 35	1									
181-520113	193 - 43	1		P1	F	O	S		R	1560-048-1300	ANAA
181-520116	193 - 23	1		M		O					
181-520130	197	1	CE176	M		O					
	198										
181-52016	195 - 38	2	AZ124	P	F	O	C				
	203 - 21	1									
181-52016- 3		2	AZ124								
181-520161	195 - 43	1	CE185	M		O					
	196 - 60										
181-52017	187 - 15	4	BZ394	M		O					
181-520175- 1		1	BZ224	M		O					
181-520175- 2		1	BZ224	M		O					
181-520176- 1		1	BZ223	M		O					
181-520176- 2		1	BZ223	M		O					
181-52018- 11	184 - 2	1	CK307	A1							
	185 - 3										
	187										
181-52019- 11	187 - 21	1	CT 73	M		O					
181-52019- 13		2	CT 73	M		O					
181-52019- 14		2	CT 73	M		O					
181-520199		1	BZ220	M		O					
181-52020	187 - 1	2	BZ393	P					R	1561-697-3184	ANAA
181-520203		8	BZ392	M		F					
181-520203- 3	181 - 41	4	BZ392								
	181 - 48										
	184 -142	4									
	184 -149	4									
	185 -102										
	185 -109										
181-520203- 5	181 - 42	4	BZ392	M		F					
	181 - 49										
	184 -141	2									
	184 -148	2									
	185 -101										
	185 -108										
181-520206	181 - 47	1	CG352	M		O					
	184 -140	1									
	185 -100										
181-520207	181 - 46	2	CG353	M		O					
	184 -139	2									
	185 -123										
181-52021- 3		1	CT186								
181-52021- 5	187 - 10	1									
		2	CT186	P1	F	O	S		R	1560-031-4745	ANAA
181-520215		2	CE196	M		F					

PART NUMBER	FIGURE AND INDEX	TOTAL QTY.	MICRO-FILM NUMBER	MAINTENANCE CODE DATA: SOURCE CODE	INSTL CAPABILITY	PRE-INSTL CAPABILITY	RECOVERABILITY	SUPPORT EQUIPMENT	FEDERAL STOCK NUMBER DATA: COGNIZANCE CODE	FEDERAL STOCK NUMBER	MFG. CODE (TSMC)
181-520224	192 - 24	5		P	F	O	C		R	5330-599-9750	ANAA
181-52023	187 - 14	4	BZ390	P					R	1560-048-1321	ANAA
181-52024	187 - 19	2	BZ389	M		O					
181-52025	187 - 20	2	CE241	P					R	1560-347-3944	ANAA
181-52049	199 - 13	2	AW404	M		O					
181-52054		1	CT 72								
181-52054- 3		1	CT 72	M		O					
181-52054- 5		1	CT 72								
181-52054- 7		1	CT 72	M		O					
181-52054- 9		1	CT 72	M		O					
181-52054- 13		1	CT 72	M		O					
181-52054- 14		1	CT 72	M		O					
181-52054- 15		1	CT 72								
181-52054- 17		1	CT 72	M		O					
181-52054- 21		1	CT 72								
181-52054- 25		1	CT 72	M		O					
181-52054- 27		1	CT 72	M		O					
181-52054- 29		1	CT 72	M		O					
181-52054- 31		1	CT 72	M		O					
181-52075- 3		1	CK329	X1							
181-52075- 5	193 - 31	1	CK329	P1					R	1560-048-1327	ANAA
181-52075- 7		1	CK329								
181-52075- 11	193 - 37	1	CK329	P1	F	O	S		R	1560-305-4109	ANAA
181-52077		1	AW376								
181-52080	196 - 36	1	DP120	P1	F	O	S		R	1560-048-1331	ANAA
181-52084		1	BZ388								
181-52084- 3	195 - 3	1	BZ388	M		O					
181-52090		1	DK190								
181-52101	180 - 1	1	DQ231								
	181 - 11										
181-52101- 3		1	BC 35								
181-52101- 5	179	1	BC 35	A		O					
181-52101- 21		1	BC 35								
181-52101- 31	179	1	BC 35	A		F					
181-52101- 51	179	1	BC 35	A		F					
181-52101- 61	179	1	BC 35	A		F					
181-52101- 81	179	1	BC 35	A		F					
181-52102- 3	179	1	CT 36	X2							
181-52102- 5	179 - 19	1	CT 36	X2							
181-52103	179 - 15	1	AU 37	X2							
181-52103- 11		1	AU 37	X2							
181-52103- 21		1	AU 37	X2							
181-52104- 3	179	1	CT 45	X1							
181-52104- 5	179 - 22	1	CT 45	X2							
181-52105	179 - 26	1	BY168	M		O					
181-52106- 1	179 - 31	1	DJ195	X2					R	1560-048-1335	ANAA
181-52106- 2	179 - 32	1	DJ195	X2					R	1560-048-1336	ANAA
181-52107- 1	179 - 30	1	CE212	M		O					
181-52107- 2	179	1	CE212	M		O					
181-52108	179 - 16	1	BM343	M		O					
181-52203	181	2	CK332	M		O					
181-52203- 3	181 - 12	2	CK332	M		O					
181-52203- 5	181	2	CK332	M		O					
181-52206- 3		1	CT 48	X1							
181-52206- 4		1	CT 48	X1							
181-52206- 5	191 - 56	1	CT 48	P1	O	O	S		R	1560-048-1337	ANAA
181-52206- 6	192 - 37	1	CT 48	P1	F	O	S		R	1560-048-1338	ANAA
181-52207- 5	191 - 51	2	CT 52	P1	F	O	S		R	1560-048-1339	ANAA
	192 - 30										
181-52208	191 - 53	2	BY169	P1	F	O	S		R	1560-048-1340	ANAA
	192 - 39										
181-52210	181 - 1	1		P1					R	1560-048-1341	ANAA
181-52211		1	BZ386	M		O					
181-52216	181	2	CH 6	M		O					
181-52226	191 - 61	2	CH 7	M		O					
	192 - 40										
181-52226- 3		2	CH 7	M		O					
181-52255	181	1		P	F	O	S		R	1560-031-4747	ANAA
181-52255- 15		1									
181-52256	181	1		M		O					
181-52256- 3	181 - 29	1									
181-52257	181 - 27	1	CE213	M		O					
181-52258	181 - 26	1	CE214	M		O					
181-52303	180 - 55	1	CH 10	M		O					
181-52303- 5	180	1	CH 10	M		O					
181-52304- 7	180	1	CK333	M		O					
181-52304- 9	180 - 44	1	CK333	M		O					
181-52304- 11	180 - 41	1	CK333	M		O					
181-52305- 3		1		X1							
181-52305- 5	180 - 21	1		P1	F	O	S		R	1560-373-6628	ANAA
181-52308- 3		1	CT 23	X1							
181-52308- 5	191 - 14	1	CT 23	P1	F	O	S		R	1560-048-1343	ANAA
181-52322- 3	180 - 29	1		P2	F	O	S		R	1560-697-3134	ANAA
181-52347	180 - 54	1	AW212	P2	O	O	S		R	1560-048-1356	ANAA
181-52348- 19	180 - 50	1	BE278	X1							
181-52348- 21	180	1	BE278	X2							
181-52356	180 - 23	1	CE217	M		O					
181-52401	184 - 3	1	AU 73								
	185 - 2										
181-52401- 1		1	AU 73								
181-52401- 2		1	AU 73								
181-52401-101	186	1	AU 73	A		O					
181-52401-102		1	AU 73								
181-52401-103	186	1	AU 73	A		O					
181-52401-105	186	1	AU 73	A		O					
181-52404- 1	186 - 69	1	AU 96	X2							
181-52404- 2	186	1	AU 96								
181-52404- 3		1	AU 96	X2							
181-52405	274 - 32	2									
181-52405- 1	186 - 11	1	AU 77	X2							
181-52405- 2	186	1	AU 77	X2							
181-52408	184 - 55	1									
181-52409- 1	184 - 80	1									
181-52409- 2	184	1	CT 34	P1					R	1560-373-6651	ANAA
	184 - 81	1									

PART NUMBER	FIGURE AND INDEX	TOTAL QTY.	MICRO-FILM NUMBER	MAINTENANCE CODE DATA: SOURCE CODE	INST'L CAPABILITY	PRE-INST'L CAPABILITY	RECOVERABILITY	SUPPORT EQUIPMENT	FEDERAL STOCK NUMBER DATA: COGNIZANCE CODE	FEDERAL STOCK NUMBER	MFG. CODE (TSMC)
181-52410- 3		1	DK108	X1							
181-52410- 7		1	DK108	X1							
181-52410-101	184 - 54	1									
181-52411- 1	186 - 64	1	BZ214	M		O					
181-52411- 2	186	1	BZ214	M		O					
181-52412- 1	186 - 51	1	BZ213	M		O					
181-52412- 2	186	1	BZ213	M		O					
181-52412- 3		1	BZ213								
181-52413- 5	184 - 87	1									
		1	CK349	X2							
181-52413- 6	184 - 88	1									
		1	CK349	X2							
181-52416- 3	184 - 40	1									
181-52417- 1		1	CH 19	M		O					
181-52417- 2		1	CH 19	M		O					
181-52417- 3		1	CH 19	M		O					
181-52417- 4		1	CH 19	M		O					
181-52417- 5		1	CH 19	M		O					
181-52417- 6		1	CH 19	M		O					
181-52418		2	CH 20	M		O					
181-52418- 3		2	CH 20	M		O					
181-52418- 5		2	CH 20	M		O					
181-52419- 1	186 - 95	1	BZ212	M		O					
181-52419- 2	186	1	BZ212	M		O					
181-52419- 3		1	BZ212	M		O					
181-52419- 4		1	BZ212	M		O					
181-52419- 5		1	BZ212	M		O					
181-52419- 6		1	BZ212	M		O					
181-52420	184 -118	2									
	185 - 78										
181-52420- 3		2		M		O					
181-52420- 11		2		M		O					
181-52420- 15		2		M		O					
181-52420- 17		2		M		O					
181-52421	184 - 36	1									
181-52424- 1	184 - 22	1	DK134	P1	O	O	S		R	1630-373-6655	ANAA
	185 - 22										
181-52424- 2	184	1	DK134	P1	O	O	S		R	1630-373-6654	ANAA
	184 - 23	1									
	185										
181-52425	186 - 42	2	CE224	P1	O	O	C		R	1560-048-1363	ANAA
181-52426	184 - 95	1									
181-52426- 3	184 - 99	1									
		1	AY 2	M		F					
181-52427	184	2									
	184 -117	1									
181-52427- 5		2	AY 6	M		F					
181-52431	186 - 21	2	BZ210	M		O					
181-52431- 3		2	BZ210	M		O					
181-52433- 3	184 - 11	2	CT 44	P1	F	O	S		R	1630-373-6655	ANAA
	185 - 11										
181-52434- 5		1	BS247								
181-52434- 6		1	BS247								
181-52434- 7		1	BS247	X1							
181-52434- 8		1	BS247	X1							
181-52434- 9		1	BS247	P1	F	O	S		R	1560-341-4594	ANAA
181-52434- 10		1	BS247	P1	F	O	S		R	1560-341-4593	ANAA
181-52435	184 - 17	2	BE298	P1					R	1560-048-1364	ANAA
	185 - 17										
181-52435- 3	184 - 17	2	BE298	P1					R	1560-098-1467	ANAA
	185 - 17										
181-52436	184 - 4	2	AQ 28	M		O					
	185 - 4										
	186										
181-52436- 3		2	AQ 28	M		O					
181-52436- 5	186 - 17	1	AQ 28	M		O					
181-52437	186	2	AR 59	M		O					
181-52437- 3		2	AQ 28	M		O					
181-52437- 5	186 - 60	2	AR 59	M		O					
181-52438- 3		1	CT 54	X1							
181-52438- 4		1	CT 54	X1							
181-52438- 5	186 - 65	1	CT 54	X2							
181-52438- 6	186	1	CT 54	X2							
181-52442	184 -101	1									
181-52442- 3	184 -105	1									
		1	AY 65	M		F					
181-52443- 3	191 - 33	2	AS130	P1	F	O	S		R	1560-544-8414	ANAA
	192 - 20										
181-52444- 13		1	CT 22	X1							
181-52444- 14		1	CT 22	X1							
181-52444- 15	191 - 28	1	CT 22	P1	F	O	S		R	1560-031-4752	ANAA
181-52444- 16	192 - 6	1	CT 22	P1	F	O	S		R	1560-031-4753	ANAA
181-52445- 5		1	CT 43						R	1560-048-1370	ANAA
181-52445- 9		2	CT 43	X1							
181-52445- 11	191 - 42	2	CT 43	P1	F	O	S		R	1560-031-4754	ANAA
	192 - 16										
181-52446- 1	184	1	AW224	P1	F	O	S		R	1560-373-6656	ANAA
	185										
181-52446- 2	184 -131	1									
	185 - 91										
181-52447	184 - 69	9 1									
181-52449	184	2	AS292	M		O					
	185										
181-52449- 3	184 -125	1									
	185 - 85										
181-52449- 5		2	AS292	M		O					
181-52450		2	CH 21	M		O					
181-52452- 3	186 - 45	2	CE226	M		O					
	186 - 46										
181-52452- 5		2	CE226	M		O					
181-52455- 7	184	1	CH 23	P1	O	O	S		R	1560-031-4755	ANAA
181-52455- 9	184 - 52	1									
181-52456- 3	184	2	CH 24	M		O					
181-52457	184 - 48	1									
	184 - 51	1									

PART NUMBER	FIGURE AND INDEX	TOTAL QTY.	MICRO-FILM NUMBER	MAINTENANCE CODE DATA: SOURCE CODE	INST'L CAPABILITY	PRE-INST'L CAPABILITY	RECOVERABILITY	SUPPORT EQUIPMENT	FEDERAL STOCK NUMBER DATA: COGNIZANCE CODE	FEDERAL STOCK NUMBER	MFG. CODE (TSMC)
181-52458	184 - 47	1									
	184 - 50	1									
181-52462	184 - 16	1	BZ383								
	185 - 16										
181-52465	184 -110	1									
	185 - 74										
181-52466	184	4	CE228	P1					R	5306-320-8206	ANAA
	184 - 98	1									
	184 -104	1									
181-52467	184 -115	2									
181-52467- 3	184	2									
		2	AY 42	M		F					
181-52474	184	1	CE229	P1					R	5306-350-6146	ANAA
	184 - 67	1									
181-52475	184	1	CE230	M		O					
	184 - 66	1									
181-52476	184 - 64	1									
181-52476- 3	184	2									
		1	AY 50	M		F					
181-52477- 3	184 - 53	1									
181-52478	184 - 63	1									
181-52478- 3		1	CK353	M		O					
181-52478- 5		1	CK353	M		O					
181-52480		1	BE299	M		O					
181-52480- 3		1	BE299	M		O					
181-52480- 5		1	BE299	M		O					
181-52553-202		1									
181-53000-201	56 - 19	1									
181-53005		1	CP 25								
181-53005- 3	61	1	CP 25	M		O					
181-53005- 5	61	2	CP 25	M		O					
181-53005- 7		1	CP 25	M		O					
181-53005- 9		1	CP 25	M		O					
181-53005- 13		1	CP 25	M		O					
181-53005-101		1	CP 25								
181-53005-201	61	1	CP 25	A		O					
181-53005-401	60 - 2	1	CP 25	A		O					
	61										
181-53006	56	1	BU 26	A		O					
	60										
181-53006- 3		1	BU 26	M		O					
181-53006- 4		1	BU 26	M		O					
181-53006- 5		1	BU 26	M		O					
181-53006- 7		1	BU 26	M		O					
181-53006- 8		1	BU 26	M		O					
181-53009	55 - 1	1	CP 28	P1					R	1680-396-0768	ANAA
181-53009- 3		1	CP 28	M		O					
181-53009- 13		1	CP 28								
181-53009-101		1	CP 28						R	1680-612-7222	ANAA
181-53009-201	56	1	CP 28	P2	F	O	R		R	1680-031-4798	ANAA
181-53009-301		1	CP 28								
181-53009-501		1	CP 28								
181-53009-701	57 - 1	1	CP 28	P2	F	O	S		R	1680-544-8417	ANAA
	60										
181-53010		2	CK355	M		O					
181-53011		1	CK356	M		O					
181-53012		1	CK357	M		O					
181-53013- 1		1	CK358	M		O					
181-53013- 2		1	CK358	M		O					
181-53014- 1		1	DG296								
181-53014- 2		1	DG296								
181-53014- 3		1	DG296								
181-53014- 4		1	DG296								
181-53014- 5		1	DG296	M		O					
181-53014- 6		1	DG296	M		O					
181-53014- 7		1	DG296								
181-53014- 11		1	DG296								
181-53015- 1		1	DK210								
181-53015- 2		1	DK210	M		O					
181-53015- 4		1	DK210	M		O					
181-53015- 12		1	DK210	M		O					
181-53015- 14		1	DK210	M		O					
181-53015- 16		1	DK210	M		O					
181-53016- 2		1	CT 29	M		O					
181-53017- 1		1	CH 28	M		O					
181-53017- 2		1	CH 28	M		O					
181-53017- 3		2	CH 28	M		O					
181-53018		1	CK359	M		O					
181-53019		1	CK360	M		O					
181-53020		1	CK361	M		O					
181-53021	61 - 41	6	CE253	M		O			R	1560-373-6664	ANAA
	61 - 56										
	61 - 78										
181-53021- 3		6	CE253	M		O					
181-53022	61 - 47	4	CH 29	M		O			R	1560-373-6665	ANAA
	61 - 84										
181-53024- 1		1	CK362								
181-53024- 2		1	CK362								
181-53024- 11	61 - 71	1	CK362	X2							
181-53024- 12	61	1	CK362	X2							
181-53025- 1	61 - 49	1	AS264	X2							
181-53025- 2	61	1	AS264	X2							
181-53033	61	1	CP 65	M		O					
181-53033- 3	61 -117	1	CP 65	M		O					
181-53038	56 - 45	1	CP 34	M		O					
181-53038- 3		2	CP 34	M		O					
181-53038- 5		1	CP 34	M		O					
181-53038- 7		1	CP 34	M		O					
181-53039	56 - 57	1	AT 25	M		O					
	60 - 30										
181-53039- 3		1	AT 25	M		O					
181-53039- 7		1	AT 25	M		O					
181-53039- 11		1	AT 25	M		O					
181-53039- 15		1	AT 25	M		O					
181-53039- 17		1	AT 25	M		O					

PART NUMBER	FIGURE AND INDEX	TOTAL QTY.	MICRO-FILM NUMBER	MAINTENANCE CODE DATA: SOURCE CODE	INSTL CAPABILITY	PRE-INSTL CAPABILITY	RECOVERABILITY	SUPPORT EQUIPMENT	COGNIZANCE CODE	FEDERAL STOCK NUMBER DATA: FEDERAL STOCK NUMBER	MFG. CODE (TSMC)
181-53039- 18		1	AT 25	M		O					
181-53039- 19		1	AT 25	M		O					
181-53039- 20		1	AT 25	M		O					
181-53039- 21		1	AT 25	M		O					
181-53039- 23		1	AT 25	M		O					
181-53039- 25		1	AT 25	M		O					
181-53039- 27		2	AT 25	M		O					
181-53039- 29		2	AT 25	M		O					
181-53039- 31		2	AT 25	M		O					
181-53040- 3	56 - 58	1	BE268	XZ							
	60 - 31										
181-53043	56 - 60	8	CE254	M		O					
	60 - 33										
181-53044- 3	56 - 71	2	CH 30	M		O					
	60 - 44										
181-53044- 5	56 - 70	2	CH 30	M		O					
	60 - 43										
181-53046		1	DQ175								
181-53046- 3		1	DQ175								
181-53048- 5		1	DG145								
181-53048- 7	53 - 44	1	BY264	M		O					
181-53048- 9	53	1	DG145	M		O					
181-53048-101	53	1	DG145	P	F	O	C		R	1560-511-1438	ANAA
	58 -162										
181-53052-101		1	CT 6								
181-53077	56 - 20	1	CG207	M		O					
181-53080- 5	61	1	CK363	M		O					
181-53081	61 -105	1	AY201								
181-53081- 2	61	1	AY201								
181-53083	61 -105	1	AY228								
181-53085- 1	61 - 12	1	AV 73	X2							
181-53085- 2	61	1	AV 73	X2							
181-53086	61 - 14	1	CK363	M		D					
181-53086- 11	61	1	CK363	M		O					
181-53087- 1	61 - 32	1	CV 93	M		O					
181-53087- 2	61	1	CV 93	M		O					
181-53088	61 - 31	2	CT 50	M		O					
181-53089- 1	61 - 37	1	CH 33	X2							
181-53089- 2	61	1	CH 33	X2							
181-53090	61 - 33	2	CG232	X2							
181-53091		1	CP 66	M		O					
181-53092	61 -118	1	CP109	M		O					
181-53093		1	BQ234	M		O					
181-53094-101	59 - 25	1	CT 77	M		O					
	59A- 70										
181-53094-102	59 - 26	1	CT 77	M		O					
181-53094-201	59A- 71	1									
181-53097- 1		1	CH 34	M		O					
181-53097- 2		1	CH 34	M		O					
181-53098	61 -116	1		M		O					
181-53099- 1		1	AP 12	M		O					
181-53099- 2		1	AP 12	M		O					
181-53099- 3		2	AP 12	M		O					
181-53099- 5		1	AP 12	M		O					
181-53100- 1		1	AP 13	M		O					
181-53100- 2		1	AP 13	M		O					
181-53100- 3		2	AP 13	M		O					
181-53100- 5		1	AP 13	M		O					
181-53100- 6		1	AP 13	M		O					
181-53104- 3	56 - 59	1	CT 5	X2							
	60 - 32										
181-53104- 4	56	1	CT 5	X2							
	60										
181-53105- 1	61 - 93	1	AQ 21	X2							
181-53105- 2	61	1	AQ 21	X2							
181-53117- 11		2									
181-53124	59 - 56	2	CE255	M		O					
181-53125	59 - 42	1	CE256	M		O					
181-53125- 3		1	CE256	M		O					
181-53125- 5		1	CE256	M		O					
181-53126	55 - 2	1	CT 61	P	F	O	C		R	1680-996-0772	ANAA
	57 - 2										
	57A- 2										
181-53126- 3		1	CT 61	M		O					
181-53126- 4		1	CT 61	M		O					
181-53126- 5		1	CT 61	M		O					
181-53126- 7		1	CT 61	M		O					
181-53126- 8		2	CT 61	M		O					
181-53126- 9		1	CT 61	M		O					
181-53126- 11		1	CT 61	M		O					
181-53130		1	CE257								
181-53130- 3		1	CE257								
181-53131		1	CH 37								
181-53133- 3	59 - 49	2	CE258	M		O					
181-53134		1	CA230	M		O					
181-53135		1	CK364	M		O					
181-53136		1	CK365	M		O					
181-53150-201		1	BP263	U							
181-53150-601		1	BP263	U							
181-53150-701		1	BP263	U							
181-53150-801		1	BP263	U							
181-53150-811		1	BP263	U							
181-53151		1	BY 89	M		O					
181-53152- 3		1	CT 14	M		O					
181-53152- 5		3	CT 14	M		O					
181-53152- 7		1	CT 14	M		O					
181-53152- 9		1	CT 14	M		O					
181-53152- 11		1	CT 14	M		O					
181-53152- 13		1	CT 14	M		O					
181-53152-101	55 - 13	1	CT 14	M		O					
181-53152-201	55	1	CT 14	M		O					
	57 - 13										
181-53153- 3		1	CV 95	M		O					
181-53153- 5		3	CV 95	M		O					
181-53153- 9		1	CV 95	M		O					
181-53153- 11		1	CV 95	M		O					
181-53153- 13		1	CV 95	M		O					
181-53153- 15		1	CV 95	M		O					
181-53153-101	55 - 12	1	CV 95	M		O					
	57A- 12										
	57A- 13										
181-53153-201	55	1	CV 95	M		O					
	57 - 12										
	57A										
181-53156- 3		1	AW439	M		O					
181-53156- 5		1	AW439	M		O					
181-53156- 7		1	AW439	M		O					
181-53156- 13		1	AW439								
181-53156- 15		1	AW439								
181-53156- 17		1	AW439	M		O					
181-53156- 19		1	AW439	M		O					
181-53156- 21		1	AW439	M		O					
181-53156- 23		1	AW439	M		O					
181-53156-101		1	AW439								
181-53156-201		1	AW439	M		O					
181-53158		1	CK367	M		O					
181-53158- 3		1	CK367	M		O					
181-53162		1	CK369	M		O					
181-53162- 3		1	CK369	M		O					
181-53162- 5		1	CK369	M		O					
181-53163		1	CA165								
181-53163- 3		1	CA165								
181-53163- 5		1	CA165								
181-53163- 7		1	CA165								
181-53163-101		1	CA165								
181-53165		1	CK371								
181-53165- 3		1	CK371								
181-53165- 5		1	CK371								
181-53167- 1		1	CH 39	M		O					
181-53167- 2		1	CH 39	M		O					
181-53169		1	CB 50	M		O					
181-53169- 3		1	CB 50	M		O					
181-53169- 5		1	CB 50	M		O					
181-53170- 3		1									
181-53170- 5		1									
181-53171		1	CH 40								
181-53171- 3		1	CH 40								
181-53172- 3		1	AT 66								
181-53172- 5		1	AT 66	M		O					
181-53172- 7		1	AT 66								
181-53172- 13		1	AT 66								
181-53172- 17		1	AT 66	M		O					
181-53172- 19		1	AT 66	M		O					
181-53172- 21		1	AT 66	M		O					
181-53172- 23		1	AT 66	M		O					
181-53172-101		1	AT 66								
181-53172-201		1	AT 66	M		O					
181-53174		1	CH 41	M		O					
181-53174- 3		1	CH 41	M		O					
181-53175		1	CV100								
181-53175- 3		1	CV100								
181-53175- 5		1	CV100	M		O					
181-53175- 7	310 - 15	1	CV100	M		O					
181-53175- 9	310 - 9	1	CV100	M		O					
181-53175- 21		1	CV100	M		O					
181-53175- 31	55 - 16	1	CV100	M		O					
	57A- 16										
	310										
181-53175- 41	57 - 16	1	CV100	M		O					
	57A										
	208 - 23										
	310										
181-53176- 7	55 - 4	1	CT178	M		O					
	57 - 4										
	57A- 4										
181-53176- 8	55 - 5	1	CT178	M		O					
	57 - 5										
	57A- 5										
181-53177	55 - 34	2	CK374	P1	F	O	C		R	1680-094-6737	ANAA
	57 - 56										
	57A- 18										
181-53177- 3		1	CK374	X1							
181-53177- 5		1	CK374	M		O					
181-53177- 7		1	CK374	M		O					
181-53177- 9		1	CK374								
181-53177- 10		1	CK374								
181-53177- 11	55 - 34	2	CK374	P1	F	O	C		R	1680-323-4124	ANAA
	57 - 56										
	57A										
181-53177- 13		1	CK374	M		O					
181-53177- 14		1	CK374	M		O					
181-53178- 5		1	CV 99								
181-53178- 6		1	CV 99	M		O					
181-53178- 7		1	CV 99	M		O					
181-53178- 11		1	CV 99								
181-53178- 13		1	CV 99	M		O					
181-53178- 15		1	CV 99	M		O					
181-53178- 19		1	CV 99	M		O					
181-53178- 21		1	CV 99	M		O					
181-53178-101		1	CV 99								
181-53178-201	55 - 3	1	CV 99	M		O					
	57A- 3										
181-53178-301	55	1	CV 99	M		O					
	57A										
	57 - 3										
181-53179- 3		1	AX168								
181-53179- 4		1	AX168								
181-53179- 5		1	AX168								
181-53179- 7		1	AX168								
181-53180	55 - 10	1	DM220	M		O					

PART NUMBER	FIGURE AND INDEX	TOTAL QTY.	MICRO-FILM NUMBER	MAINTENANCE CODE DATA: SOURCE CODE	INST'L CAPABILITY	PRI-INST'L CAPABILITY	RECOVERABILITY	SUPPORT EQUIPMENT	COGNIZANCE CODE	FEDERAL STOCK NUMBER DATA: FEDERAL STOCK NUMBER	MFG. CODE (TSMC)
	57 - 10										
	57A- 10										
181-53180- 3		1	DH220	M		O					
181-53180- 5		1	DH220	M		O					
181-53180- 11	55 - 10	1	DH220	M		O					
	57 - 10										
	57A										
181-53181- 1		1	CT 27	M		O					
181-53181- 2		1	CT 27	M		O					
181-53181- 3		1	CT 27	M		O					
181-53181- 4		1	CT 27	M		O					
181-53181- 5		1	CT 27	M		O					
181-53181- 6		1	CT 27	M		O					
181-53182	55 - 11	1	AW171	M		O					
181-53182- 5		1	AW171	M		O					
181-53182- 11	57 - 11	1	AW171	M		O					
	57A- 11										
181-53183		1	DP299								
181-53183- 3		1	DP299	M		O					
181-53183- 5		1	DP299	M		O					
181-53183- 7		1	DP299	M		O					
181-53183-101	55 - 6	1	DP299	P1	F	O	S		R	1560-570-2212	AOGA
	57A- 6										
181-53183-301	57 - 6	1	DP299	P1	O	O	S		R	1560-564-1477	ANAA
	57A										
181-53184- 5		1	CV 98	M		O					
181-53184- 7		1	CV 98	M		O					
181-53184- 9		1	CV 98	M		O					
181-53184- 11		1	CV 98								
181-53184- 13	55 - 7	1	CV 98	P	F	O	S		R	1560-511-1440	ANAA
	57A- 7										
181-53184- 15		1	CV 98	M		O					
181-53184- 21	57 - 7	2	CV 98	M		O					
	57A										
181-53189	55 - 15	1	CK375	M		O					
	57 - 15										
	57A- 15										
181-53189- 3		1	CK375	M		O					
181-53191	61 -119	2	CE259	M		O					
181-53192- 5		1	DO 62								
181-53192- 7		1	DO 62	M		O					
181-53192- 11		1	DO 62	M		O					
181-53192- 51		1	DO 62								
181-53192- 61		1	DO 62	M		O					
	43 - 90	1									
181-53192- 81		1	DO 62	M		O					
	43	1									
181-53196		1	CE260	M		O					
181-53197		1	CE261	M		O					
181-53198		1	CE262	M		O					
181-53199		1	CE263	M		O					
181-53203		4	AO 25	M		O					
181-53204		1	CE264	M		O					
181-53205- 1		1	CH 43	M		O					
181-53205- 2		1	CH 43	M		O					
181-53206	59 - 55	1	CE265	M		O					
181-53207	61 - 64	4	CE266	M		O					
	61 - 86										
181-53207- 3		4	CE266	M		O					
181-53208	61 - 69	4	AO 37	P	F	O	C		R	1680-094-6738	ANAA
181-53209- 3		2	CK376	M		O					
181-53209- 5		2	CK376	M		O					
181-53209- 7		2	CK376	M		O					
181-53209- 9		2	CK376	M		O					
181-53210- 3		1	CK377	M		O					
181-53210- 5		1	CK377	M		O					
181-532101- 1		1	AP 11	M		O					
181-532101- 2		1	AP 11	M		O					
181-532103		1	BU213								
181-532104		1	BZ378								
181-532105		1	CE267								
181-532106		1	CE268	M		O					
181-532108		1	CT 1	M		O					
181-532108- 3		1	CT 1	M		O					
181-532108- 5		1	CT 1	M		O					
181-532108- 7		1	CT 1	M		O					
181-532108- 9		1	CT 1	M		O					
181-532108-101	55 - 17	1	CT 1	M		O					
	57 - 17										
	57A- 17										
181-532109- 1		1	BZ205	M		O					
181-532109- 2		1	BZ205	M		O					
181-532109- 3		1	BZ205	M		O					
181-532109- 4		1	BZ205	M		O					
181-53211- 1		1	AR 57	P		O					
181-53211- 2		1	AR 57	M		O					
181-53211- 3		1	AR 57	M		O					
181-53211- 4		1	AR 57	M		O					
181-532113		1	CK378								
181-532113- 3		2	CK378								
181-532114		1	CN101	M		O					
181-532118	61 - 62	2	AO 24	M		O			F	1560-315-5725	ANAA
181-532119		1	BE208	M		O					
181-53212		1	CP 64	M		O					
181-53212- 3		1	CP 64	M		O					
181-53213		1	CK380	M		O					
181-53214- 1		1	CP 86	M		O					
181-53214- 2		1	CP 86	M		O					
181-53215- 1		1	CP155	M		O					
181-53215- 2		1	CP155	M		F					
181-53216	56 - 55	2	AW 38	M		O					
	60 - 28										
181-53217		2	CE270	M		O					
181-53218	61 - 26	1	CK381	M		F					
181-53220	59 - 54	1	CE271	M		O					

PART NUMBER	FIGURE AND INDEX	TOTAL QTY.	MICRO-FILM NUMBER	MAINTENANCE CODE DATA: SOURCE CODE	INST'L CAPABILITY	PRI-INST'L CAPABILITY	RECOVERABILITY	SUPPORT EQUIPMENT	COGNIZANCE CODE	FEDERAL STOCK NUMBER DATA: FEDERAL STOCK NUMBER	MFG. CODE (TSMC)
181-53221		2	CK382	M		O					
181-53225	58 -133	1									
181-53225- 3		1									
181-53225- 11		1									
181-53225- 13		1		M		O					
181-53225- 15		1		A		F					
181-53225- 17		1		M		O					
181-53225-101	62	1		A		F					
181-53225-301	62	1									
181-53236		1	CE272	M		O					
181-53239- 1	59 - 3	1	CK383	M		O					
181-53239- 2	59 - 4	1	CK383	M		O					
181-53239- 3		1	CK383	M		O					
181-53239- 4		1	CK383	M		O					
181-53239- 5		1	CK383	M		O					
181-53239- 6		1	CK383	M		O					
181-53244- 1		1	BZ204	M		O					
181-53244- 2		1	BZ204	M		O					
181-53246- 1		1	AW348	M		O					
181-53246- 2		1	AW348	M		O					
181-53246- 3		1	AW348	M		O					
181-53246- 4		1	AW348	M		O					
181-53247- 1		1	BS 77								
181-53247- 2		1	BS 77								
181-53247-101	55 - 8	1	BS 77	M		O					
	57A- 8										
181-53247-102		1	BS 77								
181-53251		1	CG230								
181-53252		1	CA252								
181-53252- 3		1	CA252								
181-53259	59 - 39	1	CK384	M		O					
181-53259- 3	59	1	CK384	M		O					
181-53259- 5	59	1	CK384	M		O					
181-53260		1	CE273	M		O					
181-53261	59	1	CE274	M		O					
181-53262	62 - 4	1									
181-53263		1	CE275	M		O					
181-53264		1	CK385	M		O					
181-53266		1	BU113								
181-53266- 3		1	BU113								
181-53267	55 - 14	1	CH 46	M		O					
	57 - 14										
	57A- 14										
181-53267- 3		1	CH 46	M		O					
181-53288	56 - 54	2	CH 58	M		O					
	60 - 27										
181-53289- 1		1	DK 62								
181-53289- 2		1	DK 62								
181-53289- 3		1	DK 62								
181-53289- 4		1	DK 62								
181-53289- 5		2	DK 62	M		O					
181-53289- 7		2	DK 62	M		O					
181-53289- 9		4	DK 62	M		O					
181-53289- 11		1	DK 62	M		O					
181-53289- 12		1	DK 62	M		O					
181-53289- 13		1	DK 62								
181-53289- 14		1	DK 62								
181-53289- 15		1	DK 62								
181-53289- 16		1	DK 62								
181-53289- 17		1	DK 62	M		O					
181-53289- 18		1	DK 62	M		O					
181-53289- 19		1	DK 62	M		O					
181-53289- 20		1	DK 62	M		O					
181-53289- 21		1	DK 62								
181-53289- 22		1	DK 62								
181-53289- 23		1	DK 62	M		O					
181-53289- 24		1	DK 62	M		O					
181-53289- 31		1	DK 62	M		O					
181-53289- 32		1	DK 62	M		O					
181-53289- 38		1	DK 62	M		O					
181-53289-101	56 - 51	1	DK 62	M		O					
	60 - 24										
181-53289-102	56	1	DK 62	M		O					
	60										
181-53289-301		1	DK 62	M		O					
181-53289-302		1	DK 62	M		O					
181-53294		1	BA 59								
181-53294- 3		2	BA 59								
181-53294- 5		1	BA 59								
181-53294- 7		1	BA 59								
181-53294- 11		1	BA 59								
181-53295		2	CH 60								
181-53295- 3		2	CH 60								
181-53297		2	BA 25								
181-53298		1	DG 6								
181-53299-201		1	BY222								
181-53302		1	AQ113	U							
181-53304		1	BX150	U							
181-53307-201		1	CS268	U							
181-53307-202		1	CS268	U							
181-53312		1	CE277	M		O					
181-53320- 3	351 - 41	4	CH 61	M		F					
181-53320- 5	351 - 44	8	CH 61	M		F					
	351 -115										
	351 -116										
181-53320- 7		2	CH 61								
181-53320- 9	351	2	CH 61	M		F					
181-53325		1	CE278	M		O					
181-53330	351 - 25	1	BZ377	M		O					
181-53363		1	CE282	M		O					
181-53348		1	CE280	M		O					
181-53348- 3		1	CE280								
181-53355	351 - 26	1	CH 63								
181-53355- 3		2	CH 63	M		O					
181-53363- 3		1	CE282	M		O					

PART NUMBER	FIGURE AND INDEX	TOTAL QTY.	MICRO-FILM NUMBER	MAINTENANCE CODE DATA: SOURCE CODE	INSTL CAPABILITY	PRE-INSTL CAPABILITY	RECOVERABILITY	SUPPORT EQUIPMENT	FEDERAL STOCK NUMBER DATA: COGNIZANCE CODE	FEDERAL STOCK NUMBER	MFG. CODE (TSMC)
181-53370- 9	350 - 50	2	BE209	P1	F	O	C		R	1560-634-9304	ANAA
181-53370- 11	350 - 37	2	BE209	P1	F	O	C		R	1660-341-4595	ANAA
	350 - 46										
181-53370- 13	350 - 77	2	BE209	P1	F	O	C		R	1660-341-4596	ANAA
181-53371- 13	350 - 89	6	AS250	P1	F	O	C		R	5330-641-7591	ANAA
181-53371- 15	350 - 81	5	AS250	P1	F	O	C		R	1660-341-4597	ANAA
	351 - 33										
181-53371- 19	351 - 24	2	AS250	P1	F	O	C		R	1560-634-9305	ANAA
181-53371- 21	351 - 74	3	AS250	P1	F	O	C		R	1560-048-1375	ANAA
181-53371- 23	351 - 17	1	AS250	P1	F	O	C		R	1660-341-4598	ANAA
181-53374	43 -104	1	CE283	M		O					
181-53378	350	1	CH 66	M		O					
181-53382		1	AW238	M		O					
181-53382- 3		1	AW238	M		O					
181-53382- 7		1	AW238	M		O					
181-53383		1	AW239	M		O					
181-53383- 3		1	AW239	M		O					
181-53383- 7		1	AW239	M		O					
181-53384		1	CK392	M		O					
181-53384- 3		1	CK392								
181-53384- 5		1	CK392	M		O					
181-53384- 7		1	CK392	M		O					
181-53384- 11		1	CK392	M		O					
181-53384- 13		1	CK392	M		O					
181-53385- 67		1	DN 83								
181-53385- 69		1	DN 83								
181-53385- 71	351 -106	1	DN 83	M		F					
181-53385- 73		1	DN 83	M		F					
181-53385- 75	351 -110	1	DN 83	M		F					
181-53385- 77		1	DN 83	M		F					
181-53385- 79	351 - 91	1	DN 83	M		F					
181-53385- 81		1	DN 83	M		F					
181-53385- 83		1	DN 83								
181-53385- 85		1	DN 83								
181-53385- 87	351 - 77	1	DN 83								
181-53385- 89		1	DN 83								
181-53385- 91	351 -108	1	DN 83	M		F					
181-53385- 93		1	DN 83	M		F					
181-53385- 95	351 -112	1	DN 83	M		F					
181-53385- 97		1	DN 83	M		F					
181-53385- 99	351 -102	1	DN 83	M		F					
181-53385-101		1	DN 83	M		F					
181-53385-103	351 - 99	1	DN 83	M		F					
181-53385-105		1	DN 83	M		F					
181-53385-107	350 - 27	1	DN 83	M		F					
181-53385-109		1	DN 83	M		F					
181-53385-111		1	DN 83								
181-53385-113		1	DN 83								
181-53385-115	350 - 98	1	DN 83								
	351 - 98										
181-53385-117		1	DN 83	M		F					
181-53385-119	351 - 95	1	DN 83	M		F					
181-53385-121		1	DN 83	M		F					
181-53385-123	351 - 93	1	DN 83	M		F					
181-53385-125		1	DN 83	M		F					
181-53385-129	351 -103	1	DN 83	M		O					
181-53385-131	351 -100	1	DN 83	M		O					
181-53385-133		1	DN 83	M		O					
181-53385-135		1	DN 83	M		O					
181-53385-137	351 -107	1	DN 83	M		O					
181-53385-139		1	DN 83	M		O					
181-53385-141	351 -111	1	DN 83	M		O					
181-53385-143		1	DN 83	M		O					
181-53385-145	351	1	DN 83	M		O					
181-53385-147		1	DN 83	M		O					
181-53416	351 - 81	1	CH 68	P	F	O	S		R	1680-373-6669	ANAA
181-53417- 10	351 - 83	1		M		O					
181-53426	350 - 83	1	CK398	M		O					
181-53428		1									
181-53432- 3		1	CS251								
181-53432- 5		1	CS251								
181-53432- 7		1	CS251	M		O					
181-53432- 11		1	CS251	M		O					
181-53432- 13		1	CS251	M		O					
181-53432- 15		1	CS251	M		O					
181-53432-101	350 - 64	1	CS251	M		O			R	1560-048-1377	ANAA
181-53433		2	BZ376	M		O					
181-53434	350 - 88	1	CJ289	M		O					
181-53434- 11		1	CJ289								
181-53434- 13		2	CJ289								
181-53434- 21		1	CJ289	M		O					
181-53434- 23		2	CJ289	M		O					
181-53435	350 - 76	1	CJ288	M		O					
181-53435- 9		1	CJ288	M		O					
181-53435- 11		1	CJ288	M		O					
181-53436	350 - 66	1	CS250	A		F			R	1560-566-4284	ANAA
181-53436- 9		1	CS250								
181-53436- 11		1	CS250								
181-53436- 17		1	CS250	M		O					
181-53436- 19		1	CS250								
181-53436- 21		1	CS250								
181-53436- 23		1	CS250								
181-53436- 25		1	CS250	M		O					
181-53436- 29		1	CS250	M		O					
181-53436- 31		1	CS250	M		O					
181-53436- 39		1	CS250	M		O					
181-53436- 41		1	CS250	M		O					
181-53436- 43		1	CS250	M		O					
181-53438	350 - 84	1	CT 64	X2							
181-53440	350 - 82	1	CT 21	M		O					
181-53440- 3		1	CT 21								
181-53440- 5		1	CT 21								
181-53440- 7		1	CT 21								
181-53440- 11		1	CT 21	M		O					
181-53440- 15		1	CT 21								
181-53440- 25		1	CT 21	M		O					
181-53440- 25		1	CT 21	M		O					
181-53440- 27		1	CT 21	M		O					
181-53442		1	CM 70	M		O					
181-53442- 3		1	CM 70	M		O					
181-53443	93 - 54	1	CS258								
181-53443- 3		1	CS258								
181-53443- 5		1	CS258								
181-53443- 9		1	CS258								
181-53443- 10		1	CS258								
181-53443- 21		1	CS258								
181-53444	350 - 83	1	CS249	M		O			R	1660-341-4599	ANAA
181-53444- 3		1	CS249								
181-53444- 5		1	CS249								
181-53444- 7		1	CS249								
181-53444- 9		1	CS249	M		O					
181-53444- 11		1	CS249	M		O					
181-53444- 15		1	CS249	M		O					
181-53444- 17		1	CS249	M		O					
181-53444- 19		1	CS249								
181-53444- 21		1	CS249								
181-53444- 23		1	CS249	M		O					
181-53444- 25		1	CS249	M		O					
181-53445	350	1	CE288	M		F					
181-53446		1	CE289	M		O					
181-53447	351	1	CE290	P					R	1560-345-6544	ANAA
181-53448	350	1	CM 71	M		F					
181-53449	350 - 99	2	CE291	P	F	O	C		R	1560-663-4559	ANAA
	350 - 99	2	CE291	P	F	O	C		R	1560-663-4559	ANAA
181-53450		4	CE292	M		O					
181-53450- 3		4	CE292	M		O					
181-53451	350	1	CK400	M		O					
181-53452- 1	350 - 96	1	CV101	M		O					
181-53452- 2	350 - 97	1	CV101	M		O					
181-53452- 3		2	CV101	M		O					
181-53452- 5		1	CV101	M		O					
181-53452- 6		1	CV101	M		O					
181-53452- 7		1	CV101	M		O					
181-53452- 8		1	CV101	M		O					
181-53452- 9		4	CV101	M		O					
181-53456	351 -114	1	CM 72	M		O					
181-53462	350	1	CK401	M		O					
181-53462- 3		1	CK401	M		O					
181-53462- 5		1	CK401	M		O					
181-53470		4		M		O					
181-53477	351	2	CM 73	P1	F	O	S		R	1560-048-1378	ANAA
181-53482- 3	351 -113	1	CM 74	A		F					
181-53482- 5	350 - 60	1	CM 74	A		F					
181-53482- 7	351	2	CM 74	M		F					
181-53501- 1	351 - 54	1	CM403	A		O					
181-53501- 2	351 - 53	1	CK403	A		O					
181-53501- 3	351 - 60	1	CK403	M		O					
181-53501- 4	351	1	CK403	M		O					
181-53502	351 - 57	2	CE294	M		O					
181-53507	351	2	BZ202	M		O					
181-53510	351 - 52	2	CE295	P					R	1560-527-9583	ANAA
181-53511	351 - 49	1	CM 76	M		O					
181-53514		2	CE296	M		O					
181-53515		2	CE297	M		O					
181-53518		2	CE299	M		O					
181-53519- 3	351 - 64	2	CE300	M		O					
181-53519- 5	351 - 66	2	CE300	M		O					
181-53520	43 - 26	2	CE301	M		O					
181-53521	351 - 56	2	CE302	M		O					
181-53521- 3		2	CE302	M		O					
181-53521- 5		2	CE302	M		O					
181-53522	351 - 55	2	CK407	P1	F	O	S		R	1680-094-6748	ANAA
181-53522- 3		2	CK407	X1							
181-53523	351 - 65	2	BZ374	M		O					
181-53524		1	CK408								
181-53524- 3	351 - 43	1	CK408	M		O					
181-53525	351 - 39	2	CE303	P	F	O	C		R	1560-527-9584	ANAA
181-53526	350 - 78	1	CE304	P3	F	O	C		R	1680-094-6749	ANAA
181-53550		1									
181-53551	36 - 3	2	DG 7	P1	F	O	S		R	1560-373-6671	ANAA
181-53551- 11	36 - 4	1	DG 7	P1	F	O	S		R	1560-323-4125	ANAA
181-53551- 12	36	1	DG 7	P1	F	O	S		R	1560-323-4126	ANAA
181-53552- 1	36 - 7	1	CE305	M		O					
181-53552- 2	36	1	CE305	M		O					
181-53553-201	36	1	BS 89	A		F					
181-53553-202	36	1	BS 89	A		F					
181-53555	36 - 20	2	BZ375	M		O					
181-53557- 1	36 - 8	1	CE306	M		O					
181-53557- 2	36	1	CE306	M		O					
181-53558	36 - 21	2	BZ372	M		O					
181-53559	36 - 25	2	DG 8	M		O					
181-53559- 3		2	DG 8	M		O					
181-53560- 1	36	1	CK410	P1	F	O	S		R	1560-373-6674	ANAA
181-53560- 2	36	1	CK410	P1	F	O	S		R	1560-373-6675	ANAA
181-540102- 3	258	1	AW292	P1	F	O	C		R	1560-341-4607	ANAA
	288										
	305 - 19										
181-540102- 9	242 - 3	1	AW292	P1	F	O	C		R	1560-341-4611	ANAA
	315 - 38										
181-540102- 11	242 - 4	1	AW292	P1	F	O	C		R	1560-341-4600	ANAA
	315 - 40										
	315 - 40										
181-540102- 13	190 - 2										
	288	1	AW292	P1	F	O	C		R	1560-341-4601	ANAA
	315 - 32										
181-540102- 15	247	1	AW292	P1	F	O	C		R	1560-341-4602	ANAA
	288										
	315 - 36										
181-540102- 17	234	1	AW292	P1	F	O	C		R	1560-341-4603	ANAA
	288										

PART NUMBER	FIGURE AND INDEX	TOTAL QTY.	MICRO-FILM NUMBER	MAINTENANCE CODE DATA: SOURCE CODE	INSTL CAPABILITY	PRE-INSTL CAPABILITY	RECOVERABILITY	SUPPORT EQUIPMENT	FEDERAL STOCK NUMBER DATA: COGNIZANCE CODE	FEDERAL STOCK NUMBER	MFG. CODE (TSMC)
	305 - 20										
181-540102- 23		1	AW292								
181-540102- 25	267 - 5	1	AW292						R	1560-697-3138	ANAA
	288 - 4										
181-540102- 29		1	AW292								
181-540102- 33	288	1	AW292	P1	F	0	C		R	1560-697-3140	ANAA
	291 - 6										
	315 - 34										
181-540102- 39	245 - 5	1	AW292	P1	F	0	C		R	6220-635-7153	D336
	315 - 30										
181-540103		1	DN160	M		0					
181-540103- 3		1	DN160	M		0					
181-540107		1	DN123								
181-540108		1	DM 36								
181-54016		1	BB 37								
181-54016- 3		1	BB 37	M		F					
181-54016- 5		1	BB 37	M		F					
181-54016- 7		1	BB 37	M		F					
181-54019		1	DM 75								
181-54023		1	DL 85								
181-54025		1	DL112								
181-54028		1	DS 18								
181-54054		1	BY 58	M		0					
181-54055		1	BR 68	A		F					
181-54055- 11	251	1	BR 68								
181-54056	251 - 17	1	CS247	M		0					
181-54056- 3		1	CS247	M		0					
181-54056- 5		2	CS247	M		0					
181-54056- 7		1	CS247	M		F					
181-54057		1	CE313	M		F					
181-54059		1	CS245	M		0					
181-54059- 3		1	CS245	M		0					
181-54065		16	DS106	M		0					
181-54065- 3		12	DS106	M		0					
181-54066		2	AY 33								
181-54069	311 - 11	2	CK418	M		0					
181-54069- 3	311	2	CK418	M		0					
181-54069- 5	311	2	CK418	M		0					
181-54075		1	CE320	M		0					
181-54102- 39	288	1									
181-54110	270 - 76	1	CH 88	M		0					
181-54112	251 - 22	1	CH 89	M		0					
181-54113	230 - 1	2	CE331	M		0					
181-54114		1	CE332								
181-54151	297 - 17	1	CE344	M		F					
	298 - 19										
181-54152		1	CH 92	M		0					
181-54155- 3	234 - 40	2	CH 95	M		0					
	235 - 40										
181-54182- 1		1	DN 25	M		0					
181-54182- 2		1	DN 25	M		0					
181-54182- 3		1	DN 25	M		0					
181-54182- 5		1	DN 25	M		0					
181-54182- 11		1	DN 25	M		0					
181-54183- 1		1	CE351	M		0					
181-54183- 2		1	CE351	M		0					
181-54189		1	AW245								
181-54189- 11		1	AW245	M		0					
181-54213	314	1	AQ 41	M		0					
	319 - 58										
181-54217		6	AR 75								
181-54217- 1	241 - 56	4									
	241 - 58	2									
181-54217- 3	241 - 57	4									
	241 - 59	2									
181-54221	234 - 22	2	BE213	M		0					
	235 - 22										
181-54221- 3		2	BE213	M		0					
181-54221- 5		1	BE213	M		0					
181-54225- 28		19	CH 99	M		F					
181-54225- 32		1	CH 99	M		F					
181-54225- 36		1	CH 99	M		F					
181-54246		1	DL 87								
181-54247		1	DL 83								
181-54248		1	DL 88								
181-54250		1	DN132								
181-54618		1	CE370								
181-54618- 3	300 - 34	1	CE370	M		0					
	301 - 30										
181-54677 - 37	300	4	CV 54	P	F	0	C				
	305										
	306										
181-54677- 3	305	1	CV 54								
181-54677- 4		1	CV 54	M		F					
181-54677- 5	305	8	CV 54	M		F					
181-54677- 7	305	2	CV 54	P		F					
181-54677- 9		1	CV 54								
181-54677- 11		1	CV 54								
181-54677- 12		1	CV 54	M		F					
181-54677- 13		8	CV 54								
181-54677- 15		2	CV 54								
181-54677- 17		1	CV 54								
181-54677- 19		1	CV 54								
181-54677- 21		4	CV 54								
181-54677- 23		1	CV 54								
181-54677- 33	305 - 58	1	CV 54	P	F	0	C		R	1560-570-2213	ANAA
181-54677- 34	308 - 2	2	CV 54	M		F					
	308 - 3										
181-54677- 35	300	1	CV 54	P	F	0	C				
	305										
	306										
181-54677- 36	308 - 4	2	CV 54	M		F					
	309 - 2										
181-54677- 39	300	1	CV 54	M		0					
	305										

PART NUMBER	FIGURE AND INDEX	TOTAL QTY.	MICRO-FILM NUMBER	MAINTENANCE CODE DATA: SOURCE CODE	INSTL CAPABILITY	PRE-INSTL CAPABILITY	RECOVERABILITY	SUPPORT EQUIPMENT	FEDERAL STOCK NUMBER DATA: COGNIZANCE CODE	FEDERAL STOCK NUMBER	MFG. CODE (TSMC)
	308										
181-54677- 41	300 - 44	1	CV 54	M		0					
	305 - 56										
	306 - 61										
181-54677- 51		1	CV 54								
181-54677- 53		4	CV 54								
181-54677- 55		1	CV 54								
181-54677- 57		1	CV 54								
181-54809- 1	259 -229	1	BE181	M		0					
181-54809- 2	259	1	BE181	M		0					
181-54830	66 - 67	1	BF459	A		F					
	259										
181-54831	259	1	CH119	M		0					
181-54831- 3	259 - 21	1	CH119	M		0					
181-54832- 3	259 - 1	1	BX 97	M		0					
181-54832- 5	259 - 72	1	BX 97	M		0					
181-54833	259 - 5	2	AQ 43	P	F	0	S				
	259 - 70										
181-54833- 3		1	AQ 43								
181-54835	259	1	CL 25	A		F					
181-54836		1	CL 26	M		0					
181-54836- 3		1	CL 26	M		0					
181-54836- 5		1	CL 26	M		0					
181-54837	66 - 40	1	CH121	M		0					
	259 - 81										
181-54838	259 -100	1	CH122	P	F	0	C		R	1560-048-1397	ANAA
181-54839- 3	259 - 84	1	CH123	P	F	0	C		R	5340-531-7737	ANAA
181-54839- 5	259 - 82	1	CH123	P	F	0	C		R	5340-531-7735	ANAA
181-54840- 5	259 - 16	2	CH124	M		0					
	259 - 69										
181-54840- 7	259 - 56	1	CH124	M		0					
181-54840- 9	259 - 99	1	CH124	M		0			R	1560-048-1398	ANAA
181-54840- 11	259	1	CH124	M		0					
181-54841- 1	259 - 17	2	CE383	P	F	0	C		R	1560-607-7928	ANAA
	259 - 73										
181-54842	259 - 91	1	CH125	M		0					
181-54842- 3	259	1	CH125	M		0					
181-54845	259	1	CH126	A		F					
181-54845- 11	259	1	CH126	A		F					
181-54850	225 - 69	1	CH128	P1	F	0	S		R	1560-048-1399	ANAA
181-54851	224 - 4	1	CL 27	A		F					
	225										
181-54852	225	1	BY 8	A		F					
181-54853	225 - 9	1	CH129								
	225 - 43										
181-54854	225 - 10	1	CH130	M		0					
	225 - 42										
181-54855	225 - 8	1	BX258	M		0					
181-54856		1	CH131	M		0					
181-54857	225 - 28	1	BX267	M		0					
181-54858	225 - 27	1	CE385	M		0			R	1560-373-6676	ANAA
	225 - 38										
181-54864	259 - 51	1	AQ 44	M		0					
181-54865	259	1	CL 28	A		F					
181-54866	259 - 74	1	CH132	M		0					
181-54866- 3	259	1	CH132	M		0					
181-54880		1	CH138	M		0					
181-54881		1	CH139	M		0					
181-54881- 1	225 - 71	1									
181-54884	259 - 29	1	CL 31	P1	F	0	S		R	1560-048-1402	ANAA
181-54885	259	1	CL 32	A		F					
181-54886	259 - 27	1	CH140	P	F	0	C		R	1560-048-1403	ANAA
181-54887	259 - 31	1	CH141	M		0			R	1560-048-1404	ANAA
181-54888- 3	259 - 30	1	CE386	M		0			R	1680-373-6677	ANAA
181-54888- 5	259 - 32	1	CE386	M		0			R	1680-373-6678	ANAA
181-54889	259 - 39	1	CH142						R	1560-048-1405	ANAA
181-55026	43 - 78	1	CH145	M		0					
181-55043		1	DN 78								
181-55046		1	DP268								
181-56101- 20		1	CW 93	A		F					
181-56101- 30		1	CW 93	A		F					
181-56110- 11		1	CU336	X1							
181-56110- 13		1	CU336	X1							
181-56124		2	DG 10	P1	F	0	S		R	1560-048-1409	ANAA
181-56124- 3		2	DG 10	X1							
181-56127		4	CE395	P	F	0	C		R	5310-094-6753	ANAA
181-56131- 1		1	CM231								
181-56131- 2		1	CM231	M		0					
181-56131- 3		1	CM231								
181-56131- 4		1	CM231	M		0					
181-56131- 5		1	CM231	M		0					
181-56131- 6		1	CM231	M		0					
181-56131- 11		1	CM231	M		0					
181-56131- 13		1	CM231	M		0					
181-56132		1	CM213	M		0					
181-56133		1	CL 36	M		0					
181-56135	83 - 47	1	CL 37	M		0					
181-56135- 3	83 - 50	1	CL 37	M		0					
181-56136	83 - 51	1	CH152	M		0					
181-56137- 3	83 - 57	1	CL 38	P1	F	0	C		R	1560-098-1468	ANAA
181-56141	83 - 32	1	CH153	P1	F	0	S		R	1560-031-4762	ANAA
181-56142- 5		1	CU318	X1							
181-56142- 13	83 - 76	1	CU318	X1							
181-56144	83 - 24	2	CH154	P1	F	0	S		R	1560-048-1410	ANAA
181-56147	83 - 42	1	CH156	P1	F	0	S		R	1560-048-1412	ANAA
181-56148		1	AW277	P1					R	1560-048-1413	ANAA
181-56148- 3	83 - 45	1	AW277	P1	F	0	S		R	1560-028-0983	ANAA
181-56149	83 - 28	1									
181-56150	83 - 49	1	CE396	M		F					
181-56154	83 - 64	1	CE397	M		0					
181-56155	83 - 40	1	CH158	P	F	0	C		R	1560-544-8418	ANAA
181-56156		4	CE398	P1	F	0	C		R	1560-373-6679	ANAA
181-56157		1		P1					R	1560-031-4763	ANAA
181-56158	83	1	CL 41	M		0					
181-56158- 3	83 - 73	1	CL 41	M		0					

PART NUMBER	FIGURE AND INDEX	TOTAL QTY.	MICRO-FILM NUMBER	MAINTENANCE CODE DATA: SOURCE CODE	INST'L CAPABILITY	PRE-INST'L CAPABILITY	RECOVERABILITY	SUPPORT EQUIPMENT	FEDERAL STOCK NUMBER DATA: COGNIZANCE CODE	FEDERAL STOCK NUMBER	MFG. CODE (TSMC)
181-56158- 5	83 - 75	1	CL 41	M		O					
181-56159- 5	83 - 12	1	BZ195	M		O					
	203 - 98	1									
181-56159- 7		1	BZ195	M		O					
181-56159- 9	83 - 13	1	BZ195	M		O					
181-56159- 15		1	BZ195	M		O					
181-56161- 3	83 - 36	1	BY 19								
181-56161- 5	83	1	BY 19	P1	F	O	S		R	1560-048-1415	ANAA
181-56161- 11		1	BY 19								
181-56164		1	CH159	A		F					
181-56165	83 - 66	1	CL 43	P1	F	O	S		R	1560-031-4764	ANAA
181-56167		1	CH160	P1	F	O	S		R	1620-373-6680	ANAA
181-56168		1	CL 44								
181-56169		1	CH161								
181-56170		1	CH162	M		O					
181-56171	83 - 2	1									
181-56203- 10	82 - 1	1	BY 37	P1	F	O	R		R	1650-031-5634	ANAA
	84										
	162 - 20										
181-56202	84 - 25	1	CL 46	X1					R	1650-219-2111	ANAA
181-56203	84 - 22	1	CU326	X1					R	1650-219-2112	ANAA
181-56203- 3		1	CU326	X1							
181-56203- 5		1	CU326	X1							
181-56204	84 - 1	1	CL 47	P1	F	O	S		R	1650-219-2113	ANAA
181-56204- 3		1	CL 47	X1							
181-56205		1	CV168								
181-56205- 3	84 - 15	1	CV168	P1	F	O	S		R	1650-319-2114	ANAA
181-56207	84 - 58	1	CU307								
181-56207- 3		1	CU307	X1							
181-56207- 5		1	CU307	X2							
181-56208	84 - 61	1	BZ194	P1	F	O	S		R	1650-219-2115	ANAA
181-56209	84 - 63	1	CE401	M							
181-56210	84 - 64	1	BZ193	M		O					
181-56211	84 - 74	1	CH165	M		O					
181-56212	84 - 78	1	CE402	M		O					
181-56213	84 - 79	1	CL 48	P1	F	O	S		R	1650-219-2117	ANAA
181-56214	84 - 80	1	CH166	M		O					
181-56215	84 - 77	1	CH167	M		O					
181-56216	84 - 54	1	CL 49	X1					R	1650-219-2119	ANAA
181-56217	84 - 50	1	CH168	M		O					
181-56218	84 - 53	1	CH169	M		O					
181-56219		1	DQ248								
181-56219- 3	84 - 38	1	CV162	X2							
181-56220	84 - 43	1	CE403	M		O					
181-56221	84 - 31	1	CH170	P	F	O	S		R	1560-373-6681	ANAA
181-56222	84 - 33	1	CH171	M		O					
181-56222- 3	84	1	CH171	M		O					
181-56223	84 - 89	1	CH172	M		O					
181-56224	84 - 68	1	CE 47	P	F	O	C		R	1650-219-2121	ANAA
181-56226	71	1	CL 50	M		O					
181-56227	84 - 5	1	CH173	M		O			R	1650-321-1106	ANAA
181-56235	84	1	CL 51	P1	F	O	S		R	1650-219-2122	ANAA
181-56235- 3	84 - 81	1	CL 51	X1							
181-56301	74 - 18	1									
181-56301- 1		1	BC 49								
181-56301- 2		1	BC 49	A		F					
181-56301- 3		1	BC 49	X1							
181-56301- 4		1	BC 49	X1							
181-56301- 5		1	BC 49	X1							
181-56301- 6		1	BC 49	X1							
181-56301- 7		1	BC 49	X1							
181-56301- 8		1	BC 49	X1							
181-56301- 9		1	BC 49	X1							
181-56301- 10		1	BC 49	X1							
181-56301- 11		1	BC 49	M		O					
181-56301- 13	75 - 22	2	BC 49	M		O					
181-56301- 15		1	BC 49	M		O					
181-56301- 17		2	BC 49	M		O					
181-56301- 19	75 - 21	2	BC 49	M		O					
181-56301- 21		1	BC 49	M		O					
181-56301- 22		1	BC 49	M		O					
181-56301- 23		1	BC 49	X1							
181-56301- 24		1	BC 49	X1							
181-56301- 33		1	BC 49	X1							
181-56301- 34		1	BC 49	X1							
181-56301- 43	75	1	BC 49	P1	F	O	S		R	1560-345-6546	ANAA
181-56301- 44	75	1	BC 49	P1	F	O	S		R	1560-345-6547	ANAA
181-56301- 45		1	BC 49	M		O					
181-56301- 46		1	BC 49	M		O					
181-56301- 47		1	BC 49	M		O					
181-56301- 48		1	BC 49	M		O					
181-56301- 49		1	BC 49	M		O					
181-56301- 50		1	BC 49	M		O					
181-56301- 51		1	BC 49	M		O					
181-56301- 52		1	BC 49	M		O					
181-56301- 53		1	BC 49	M		O					
181-56301- 54		1	BC 49	M		O					
181-56301- 55		2	BC 49	M		O					
181-56301-101		1	BC 49	A		F					
181-56301-102	75	1	BC 49	A		F					
181-56301-201	75 - 5	1	BC 49	A		F					
181-56301-301	75 - 5	1	BC 49	A		F					
181-56301-302	75	1	BC 49	A		F					
181-56309- 3	75 - 17	4	CU323	P1	F	O	S		R	1560-048-1417	ANAA
181-56304- 1		1	CH174								
181-56304- 2		1	CH174								
181-56304- 3		1	CH174								
181-56304- 4		1	CH174								
181-56304- 5		2	CH174								
181-56304- 7		2	CH174								
181-56305		4	CH175	M		O					
181-56306		1	CH176	P	F	O	S		R	1560-697-3147	ANAA
181-56306- 3		1	CH176	M		O					
181-56307		1	CE404	M		O					
181-56310	75 - 18	1	CU308	P1	F	O	S		R	1560-373-6682	ANAA

PART NUMBER	FIGURE AND INDEX	TOTAL QTY.	MICRO-FILM NUMBER	MAINTENANCE CODE DATA: SOURCE CODE	INST'L CAPABILITY	PRE-INST'L CAPABILITY	RECOVERABILITY	SUPPORT EQUIPMENT	FEDERAL STOCK NUMBER DATA: COGNIZANCE CODE	FEDERAL STOCK NUMBER	MFG. CODE (TSMC)
181-56311		1	CU332						R	1560-373-6683	ANAA
181-56312- 1	75 - 20	1	CL 52	P1	F	O	S		R	1560-048-1422	ANAA
181-56312- 2	75	1	CL 52	P1	F	O	S		R	1560-048-1423	ANAA
181-56313	75 - 13	4	CH177	P1	F	O	S		R	1560-048-1424	ANAA
	75 - 70										
181-56314- 3	75 - 12	16	CH178	M		O					
	75 - 71										
181-56314- 5	75	4	CH178	M		O					
181-56320	75 - 61	1	CL 53	A		F					
181-56320- 3	75 - 68	1	CL 53	M		O					
181-56320- 5	75 - 67	2	CL 53	M		O					
181-56320- 6		1	CL 53								
181-56321- 1	75 - 66	1	CH179	P1	F	O	S		R	1560-373-6684	ANAA
181-56321- 2	75	1	CH179	P1	F	O	S		R	1560-345-6548	ANAA
181-56322	75 - 53	2	CH180	P1	F	O	S		R	1560-345-6549	ANAA
181-56323	84 - 21	1	CH181	M		O					
181-56324	84 - 27	1	CH182	M		O					
181-56351- 1	71 - 52	1	CU277	P1	F	O	S		R	1560-048-1427	ANAA
181-56351- 2	71	1	CU277	P1	F	O	S		R	1560-048-1428	ANAA
181-56351- 3		1	CU277	X1							
181-56351- 4		1	CU277	X1							
181-56351- 5		1	CU277	X1							
181-56351- 6		1	CU277	X1							
181-56351- 7		1	CU277	M		O					
181-56351- 8		1	CU277	M		O					
181-56351- 10		1	CU277	M		O					
181-56351- 11		1	CU277	M		O					
181-56351- 12		1	CU277	M		O					
181-56351- 13		1	CU277	M		O					
181-56351- 14		1	CU277	M		O					
181-56351- 15		2	CU277	M		O					
181-56351- 19		2	CU277	M		F					
181-56351- 21		2	CU277	M		F					
181-56352- 1	71 - 53	1	BP138	M		O					
181-56352- 2	71	1	BP138	M		O					
181-56353	71 - 64	2	CH183	M		O					
181-56353- 3		2	CH183								
181-56356	71 - 65	2	CH184	M		O					
181-56359	71 - 54	1	CH187	M		O					
181-56360		3	CE405	M		O					
181-56371- 1		1	CU320								
181-56371- 2	71	1	CU320	P1	F	O	S		R	1560-048-1432	ANAA
181-56371- 3		1	CU320								
181-56371- 4		1	CU320	X1							
181-56371- 5		1	CU320								
181-56371- 6		1	CU320	X1							
181-56371- 7		1	CU320	M		O					
181-56371- 8		1	CU320	M		O					
181-56371- 11	71 - 36	1	CU320	P1	F	O	S		R	1560-338-0984	ANAA
181-56371- 13		1	CU320	X1							
181-56371- 15		1	CU320	X1							
181-56371- 21	71	1	CU320	P1	F	O	S		R	1560-544-8419	ANAA
181-56371- 22	71	1	CU320	P1	F	O	S		R	1560-544-8420	ANAA
181-56372	71 - 37	2	CE406	M		O					
181-56372- 3		2	CE406	M		O					
181-56373		2	CR 11	M		O					
181-56374	71 - 43	2	CH188	P1	F	O	C		R	1560-048-1434	ANAA
181-56374- 3		2	CH188	X1							
181-56374- 5		2	CH188	X1							
181-56375		2	CH189	M		O					
181-56376	225 - 62	3	CU313								
181-56376- 3		2	CU313	X1							
181-56376- 5	82 - 14	2	CU313	P1	F	O	S		R	1560-373-6685	ANAA
181-56376- 7		2	CU313	M		O					
181-56391	203	1	AZ 52	A		F			R	1560-031-4765	ANAA
	225 - 79										
181-56391- 3	203 - 7	1	AZ 52	M		O					
181-56391- 11	203	1	AZ 52	A		F			R	1560-508-2050	ANAA
	225 - 79										
181-56392		1	CK 84								
181-56392- 3	203 - 20	1	CK 84	P1	F	O	S		R	1560-339-7852	ANAA
181-56393	203 - 2	1	CV153	P1	F	O	S		R	1560-332-6493	ANAA
181-56394	203 - 4	1	AW302	M		O					
181-56394- 3	203	1	AW302	M		O					
181-56394- 5		1	AW302	M		O					
181-56395	203 - 16	1	BE307	X1							
181-56395- 3	203 - 16	1	BE307	P1	F	O	S		R	1560-048-1437	ANAA
181-56399- 11		1	BE308								
181-56399- 31	203 - 9	1	BE308	A		F					
181-56719	203 - 96	1	AZ127	M		O					
181-56728		1	CE413	M		O					
181-56744	203 - 88	2	AZ128	M		O					
181-56798- 3		1		M		O					
181-56798- 5		1		M		O					
181-58030	149 - 17	1	CW117	P1	F	O	R		R	1650-219-2126	ANAA
181-58033- 1	156 - 9	1	CL 86	P1	F	O	R		R	1650-219-2131	ANAA
181-58033- 2	156	1	CL 86	P1	F	O	R		R	1650-219-2132	ANAA
181-58035	144 - 32	1	CL 88	P1	F	O	R		R	1650-219-2135	ANAA
181-58039- 3	144 - 39	1	BB 66	P1	F	O	R		R	1650-373-7927	ANAA
181-58040- 1	160 - 5	1	AP254	P1	F	O	R		R	1650-219-2136	ANAA
181-58040- 2	160	1	AP254	P1	F	O	R		R	1650-219-2137	ANAA
181-58051	140	1	CW 35	P1	F	O	R		R	1600-C00-2379	ANAA
181-58060		2	CX 40								
181-58072- 11		3	CW 67	X1							
181-58076- 3	149	1	CW 41	X1							
181-58076- 5	149 - 36	1	CW 41	P1	F	O	S		R	1650-373-7935	ANAA
181-58077- 3	149 - 25	1	CW 19	P1	F	O	S		R	1650-373-7936	ANAA
181-58078	149 - 33	1	CL 95	P1	F	O	S		R	1650-219-2143	ANAA
181-58078- 3		1	CL 95	X1							
181-58078- 5		1	CL 95	X1							
181-58078- 7		1	CL 95	X1							
181-58081- 3		1	AW230	X1							
181-58081- 5	149 - 17	1	AW230	P1	F	O	S		R	1650-219-2144	ANAA
181-58082	149 - 32	1	CL 96	P1	F	O	S		R	1650-219-2145	ANAA
181-58089		1	DH269								

PART NUMBER	FIGURE AND INDEX	TOTAL QTY.	MICRO-FILM NUMBER	MAINTENANCE CODE DATA: SOURCE CODE	INSTL CAPABILITY	RE-INSTL CAPABILITY	RECOVERABILITY	SUPPORT EQUIPMENT	COGNIZANCE CODE	FEDERAL STOCK NUMBER DATA: FEDERAL STOCK NUMBER	MFG. CODE (TSMC)
181-58119	160 - 17	2	CH231	P	F	O	S		R	1650-219-2153	ANAA
181-58120- 7		2	CL102	X1							
181-58124		2	CH234	M		O					
181-58124- 3		2	CH234	M		O					
181-58124- 5		2	CH234	M		O					
181-58127		2	CW 6								
181-58128- 3		2	BY172	M		O					
181-58128- 5		2	BY172	M		O					
181-58128- 7		2	BY172	M		O					
181-58131- 3		2		X1							
181-58131- 5		2		P1	F	O	S		R	1650-219-2159	ANAA
181-58132		2		P1	F	O	S		R	1650-219-2160	ANAA
181-58142- 5		1	CL108	P1	F	O	S		R	1650-219-2163	ANAA
181-58144- 3		1	CL110	X1							
181-58144- 5		1	CL110	X1							
181-58144- 7		1	CL110	X1							
181-58169- 3		1	CL113	X1							
181-58169- 5		1	CL113	X1							
181-58176- 3		1		X1							
181-58183		2	CL116								
181-58183- 3		2	CL116	X1							
181-58208		1	CH242	M		O					
181-58216		1	CL118	M		O					
181-58216- 3		1	CL118	M		O					
181-58216- 5		1	CL118	M		O					
181-58219		1	CL119	M		O					
181-58219- 3		1	CL119	M		O					
181-58224		1	CH245	M		O					
181-58224- 3		1	CH245	M		O					
181-58226		1	CH246	M		O					
181-58229		1	BV230	M		O					
181-58229- 3		1	BV230	M		O					
181-58254	152 - 41	1	CL124	M		O					
181-58254- 3		1	CL124	M		O					
181-58257- 3		1	CF 17	M		O					
181-58257- 5		1	CF 17	M		O					
181-58260	140 - 12	1	CW 82	P1	O	O	S		R	1650-219-2182	ANAA
181-58260- 3		1	CW 82	X1							
181-58260- 5		1	CW 82	X1							
181-58260- 7		1	CW 82	X1							
181-58260- 9		1	CW 82	X1							
181-58260- 11		1	CW 82	X1							
181-58260- 13		1	CW 82	X1							
181-58260- 15		1	CW 82	X1							
181-58260- 17		1	CW 82	X1							
181-58260- 19		1	CW 82	X1							
181-58260- 21		1	CW 82	X1							
181-58260- 23		1	CW 82	X1							
181-58260- 25		1	CW 82	X1							
181-58260- 27		1	CW 82	X1							
181-58260- 29		1	CW 82	X1							
181-58261		1	CH257	M		O					
181-58262		1	CH258	M		O					
181-58263		1	CH259	M		O					
181-58264		1	CH260	M		O					
181-58265		1	CH261	M		O					
181-58266		1	CH262	M		O					
181-58267		1	CH263	M		O					
181-58268	140 - 21	1		P1	F	O	C		R	1650-219-2183	ANAA
181-58269- 3	136 - 15	2	CV 47	M		F					
	137 - 16										
	137 - 27										
	353										
	PG. 1019										
	PG. 1020										
	PG. 1021										
	PG. 1026										
	PG. 1027										
181-58269- 5		1	CV 47	M		F					
181-58292	156 - 12	6		M		F					
	358										
181-58331		1	CH277	M		O					
181-58331- 3		1	CH277	M		O					
181-58332		1	BZ180								
181-58337		1	CH279	M		O					
181-58337- 3		1	CH279	M		O					
181-58368		3	BZ360	M		O					
181-58369		2	BZ359	M		O					
181-58370	124 -117	3		M		O					
	126 - 81										
	127 -107										
	136 - 64										
	137 - 71										
181-58377- 11	197 - 1	1		A		F					
	198 - 1										
	199										
181-58379	197 - 5	1		P1	F	O	S		R	1560-341-4613	ANAA
	198 - 4										
181-58380	197 - 8	1	CL156	M		O					
	198 - 7										
181-58380- 3		1	CL156	M		O					
181-58380- 5		1	CL156	M		O					
181-58383	199 - 1	1		P1	F	O	S		R	1650-218-9413	ANAA
181-58384	199 - 11	1	CH291	M		O					
181-58384- 3		1	CH291	M		O					
181-58384- 5		1	CH291	M		O					
181-58384- 7		1	CH291	M		O					
181-58384- 9		1	CH291								
181-58384- 11		1	CH291								
181-58384- 13		1	CH291								
181-58393	199 - 15	1		M		O					
181-58395	199 - 18	1		M		O					
181-58396	199 - 7	1		M		O					
181-58397	199 - 14	1	DN161	M		O					
181-58398	199 - 12	1		M		O					

PART NUMBER	FIGURE AND INDEX	TOTAL QTY.	MICRO-FILM NUMBER	MAINTENANCE CODE DATA: SOURCE CODE	INSTL CAPABILITY	RE-INSTL CAPABILITY	RECOVERABILITY	SUPPORT EQUIPMENT	COGNIZANCE CODE	FEDERAL STOCK NUMBER DATA: FEDERAL STOCK NUMBER	MFG. CODE (TSMC)
181-58417		1	CH303	M		O					
181-58418		1	CF 43	M		O					
181-58418- 3		1	CF 43	M		O					
181-58419		1	AX227	M		O					
181-58426	163	2	CA 91	P1	F	O	S		R	1650-218-9414	ANAA
181-58426- 15		2	CA 91						R	1560-604-8001	ANAA
181-58427	163 -107	2	CL162	M		O					
181-58427- 3		2	CL162	M		O					
181-58428	163 -113	2	CF 44	M		O					
181-58429	163 -111	4	BX131	M		O					
181-58429- 13		2	BX131	M		O					
181-58430	163 -112	2							R	1560-514-0761	ANAA
181-58431	163 -108	2	CF 45	M		O			R	1650-218-9415	ANAA
181-58432		4	CF 46	M		O					
181-58476	163 -109	2	CF 48	M		O					
181-58510		1	CH318	M		O					
181-58633	153 - 24	2	CV 46								
	154 - 23										
181-58633- 3	156	1	CV 46	A		F					
181-58633- 4	156	1	CV 46	A		F					
181-58640		1	CL178								
181-58728	44 - 55	1									
181-58729		1									
181-58840- 3	156 - 3	1	CL197	M		F					
181-58840- 5	156	1	CL197	M		F					
181-58840-103		1	CL197	M		F					
181-58840-105		1	CL197	M		F					
181-59005		4	CH358								
181-61014	331 - 39	8	DR 80								
181-61014- 3		8	DR 80	M		O					
181-61014- 5		24	DR 80	M		O					
181-61015- 3		4	AU 15	M		O					
181-61015- 4		4	AU 15	M		O					
181-61015- 7		4	AU 15	M		O					
181-61015- 9		4	AU 15	M		O					
181-61015- 11		12	AU 15	M		O					
181-61015- 17		12	AU 15	M		O					
181-61015- 19		4	AU 15	M		O					
181-61015- 21		4	AU 15	M		O					
181-61015- 22		4	AU 15	M		O					
181-61015- 23		4	AU 15	M		O					
181-61015- 31	331 - 40	4	AU 15	M		O					
181-61015- 32	331	4	AU 15	M		O					
181-61022	331 - 43	4	CH360	M		O					
181-61023	331 - 42	8	CH361	M		O			R	1005-373-9830	B210
181-61038	331 - 24	16	AS 34	P	F	O	C		R	1005-373-9831	B210
181-61056	329 - 12	8	CH368	P	F	O	C		R	1005-373-9832	B210
181-61060	320	1	AW382	P1	F	O	S		R	1500-C00-2166	ANAA
	322										
181-61065		2	AW493								
181-61065- 10	328 - 6	4	AW493	M		O					
181-61069- 3	328 - 11	8	AX199	P1	F	O	C		R	5308-207-6592	B210
181-61069- 5		4	AX199								
181-61074		1	CH373	M		O					
181-61081		1	CH374	M		O					
181-61081- 3		1	CH374	M		O					
181-61083	325 - 45	1	CH375	M		O					
181-61084		2	CH376	M		O					
181-61087		1	CH378	M		O					
181-61093		12	CH381						R	4730-274-6727	B210
181-61155		4	CH386						R	1005-474-9835	B210
181-61161	331 - 29	4	AW475	M		O					
181-61223	328 - 34	3	AW369	X1							
	328 - 39										
181-61224	328 - 33	2	AW350	X1							
181-61225	328	2	BU239	P1	F	O	S		R	1005-300-8755	B210
181-67002	86 - 68	1	AR 63	A		F					
181-67002- 10	86 - 68	1	AR 63	A		F					
181-69016		1	CH408								
181-69017		1	CH409	M		O					
181-69017- 3		1	CH409	M		O					
181-69017- 5		1	CH409	M		O					
181-69017- 7		1	CH409	M		O					
181-71141- 3		2	CE 90	M		O					
181-71141- 5		4	CE 90	M		O					
181-71141- 7		9	CE 90	M		O					
181-71143		2	BZ354	M		O					
181-71143- 3		4	BZ354	M		O					
181-71242		1		N		O					
181-71250- 9	209 - 50	1	CE239	P1	F	O	C		R	1560-373-6695	ANAA
181-71251- 3	209 - 49	1	CE237	M		O					
181-71252- 5		1		M		O					
181-71262- 9		1		M		O					
181-71424	209 - 20	1	CH416	M		O					
181-71424- 3		1	CH416	M		O					
181-71424- 5		1	CH416	M		O					
181-71426	209 - 7	1	CF 73	M		O					
181-71433		1	CH417								
181-71614		1	DH 29	M		F					
181-71614- 3		1	DH 29	M		F					
181-71625- 1		1	CH422	M		O					
181-71625- 2		1	CH422	M		O					
181-71625- 3		1	CH422	M		O					
181-71625- 6		1	CH422	M		O					
181-71628- 1		1	CR 15	M		O					
181-71628- 2		1	CR 15	M		O					
181-71629	358	1	CW 39								
181-71629- 11	71 - 32	1	CW 39	M		O					
	209 - 25										
181-73057- 23	PG. 1003	2	CW 65								
181-73057- 33	PG. 1003	1	CW 65								
181-73057- 35	PG. 1003	1	CW 65								
181-73057-101	PG. 1003	1	CW 65	P			S		R	1560-303-8565	SMAA
181-73066	PG. 1005	1									
181-73303		1	BV 27	M		O					

PART NUMBER	FIGURE AND INDEX	TOTAL QTY.	MICRO-FILM NUMBER	MAINTENANCE CODE DATA: SOURCE CODE	INST'L CAPABILITY	PRE-INST'L CAPABILITY	RECOVERABILITY	SUPPORT EQUIPMENT	FEDERAL STOCK NUMBER DATA: COGNIZANCE CODE	FEDERAL STOCK NUMBER	MFG. CODE (TSMC)
181-73303- 3		1	BV 27	M		O					
181-73303- 5		1	BV 27	M		O					
181-73306		1	RV 48	M		O					
181-73307	352 - 37	1	CC116	M		O					
	353 - 16										
181-73307- 3		1	CC116	M		O					
181-73307- 11	352 - 37	1	CC116	M		O					
	353 - 16										
181-73308- 3		1	BV 15	M		O					
181-73308- 5		3	BV 15	M		O					
181-73308- 7		2	BV 15	M		O					
181-73309	353 - 4	1	BS139	P1	F	O	C		R	1660-511-3465	ANAA
	353 - 28										
181-73310- 3	353 - 3	1	BV 19	M		F					
181-73310- 5		1	BV 19	M		F					
181-73310- 7	353 - 6	1	BV 19	M		F					
181-73310- 9		1	BV 19	M		F					
181-73310- 11	353 - 7	1	BV 19	M		F					
181-73310- 13		1	BV 19	M		F					
181-73310- 15	353 - 10	1	BV 19	M		F					
181-73310- 17		1	BV 19	M		F					
181-73310- 27	353 - 14	1	BV 19	M		F					
181-73310- 29		1	BV 19	M		F					
181-73310- 35	352 - 43	1	BV 19	M		F					
	353 - 19										
181-73310- 37		1	BV 19	M		F					
181-73310- 45	352 - 41	1	BV 19	M		F					
	353 - 22										
181-73310- 47		1	BV 19	M		F					
181-73310- 49	352 - 39	1	BV 19	M		F					
	353 - 25										
181-73310- 51		1	BV 19	M		F					
181-73310- 59	353 - 13	1	BV 19	M		F					
181-73310- 61		1	BV 19	M		F					
181-73310- 63	352	1	BV 19	M		O					
181-73310- 65		1	BV 19	M		O					
181-73311	352 - 44	1	CF 79	M		O					
	353 - 24										
181-73311- 3		1	CF 79	M		O					
181-73311- 5		1	CF 79	M		O					
181-73312	61 - 23	1	CF 80	M		O					
181-73313	352 - 44	1	CM202	P1	O	O	S		R	1560-048-1472	ANAA
181-73314	352	1	BV 35	M		O					
	353										
181-73315	352	1	BV 43	M		O					
	353										
181-73320		1	BV 20	U							
181-73501-201		1	BC 82	U							
181-73502-101	59 - 1	1	CV217	X2							
	59A- 81										
181-73503	59 - 2	1	CV232	X2							
	59A- 82										
181-74027	213 - 59	2	CM425	M		O					
181-74110	213 - 5	1	CL288	M		O					
181-74110- 3		1	CL288	M		O					
181-74110- 4		1	CL288	M		O					
181-74113	213 - 70	1	CV224	P1	F	O	S		R	1560-048-1473	ANAA
181-74113- 3		1	CV224	M		O					
181-74113- 5		1	CV224	M		O					
181-74113- 7		1	CV224	M		O					
181-74113- 9		1	CV224	X1							
181-74113- 11		1	CV224	X1							
181-74113- 15		1	CV224	M		O					
181-74113- 17		1	CV224	M		O					
181-74113- 19		1	CV224	M		O					
181-74113- 21		1	CV224	X1							
181-74114		1	CW 48	X1							
181-89031		1	DM149								
181-89168		1	DM 49								
181-931548		1	DM150								
181-948124		2									
181-948127		2	BV217								
181-948413		1	BE334								
181-948416		2		X2							
181-948425		1	DJ147								
181-953050		1	DM169								
181-954703		1	DP 20								
18120-1	56 - 35	1							R	1680-373-4129	X110
18140-13-130	56 - 34	1							R	1680-041-4275	X110
18423-0-300	288 - 14	1							R	5930-272-1291	D334
	290 - 5										
	350 - 80										
185-31056		8									
185-66023		1	DR243								
18500	164 - 8	1							R	1650-525-4505	A120
	165 - 8										
1851		1							R	4730-600-5972	G250
187-21402- 7		1	DL 84	X1							
187-21402- 9	89 - 47	1	DL 84	X2							
	90 - 22										
187-21402- 11		1	DL 84	X1							
187-21402- 13	89	1	DL 84								
	90										
187-21403	90 - 18	2	CU179	P1	F	O	S		R	5306-094-6773	ANAA
187-21404	90 - 20	1	CS 19	M		O			R	1560-048-1562	ANAA
187-21405	90 - 21	2	CU182	P	F	O	C		R	5310-094-6774	ANAA
187-21406	90 - 19	1	CU181	M		O			R	1680-094-6775	ANAA
187-21409- 1	90 - 17	1	CP269	M		O					
187-21409- 2	90 - 16	1	CP269	M		O					
187-21409- 15		1	CR269								
187-21416	89 - 64	2	CR271	M		O					
187-21417	89	8	CR272	M		O					
187-31700- 1		1	CR301	M		O					
187-31700- 2		1	CR301	M		O					
187-31700- 3		1	CR301	M		O					
187-31700- 4		1	CR301	M		O					
187-31729- 5	76 - 47	1		P1	O	O	S		R	1560-031-4780	ANAA
187-31729- 6	76	1		P1	O	O	S		R	1560-031-4781	ANAA
187-31740- 1		1	CR 57	M		O					
187-31740- 2		1	CR 57	M		O					
187-33605	200 - 58	1		X2					R	1630-697-3157	ANAA
187-33608		1	CU156								
187-33608- 11	200 - 64	1	CU158	P1	F	O	S		R	1560-343-9117	ANAA
187-33609	200 - 50	2		M		O					
187-33617	200 - 51	4		M		O					
187-33619		1	CS 86								
187-33619- 11	200	1	CS 86	A		F					
187-33623	200 - 52	2		M		O					
187-39021- 5		1									
187-39021- 6		1									
187-39021- 9		1									
187-39021- 10		1									
187-39021- 13		1		X1							
187-39021- 14		1		X1							
187-39021-111	78 - 46	1		P1	F	O	S		R	1560-336-0989	ANAA
187-39021-112	78	1		P1	F	O	S		R	1560-336-0990	ANAA
187-39032- 20		1									
187-45108	321 - 66	1	CU 21	P	F	O	S		R	1560-037-2503	ANAA
	323										
187-45108- 3	323 - 25	1	CU 21	M		O					
187-45108- 5	323 - 24	1	CU 21	M		F					
187-45108- 7	323 - 6	1	CU 21	M		F					
187-48970	98 - 83	2	CR 73	P1	F	O	S		R	1560-373-6757	ANAA
	99 -116										
	100 -218										
	107 - 30										
	358										
187-51011- 3	315 - 72	1		M		O					
	318 - 74										
187-51011- 5	315 - 73	1		M		O					
	318										
187-51012- 3	315 - 83	1	CU157	P1					R	1560-341-4617	ANAA
187-51012- 5	315 - 84	1	CU157	P1					R	1560-341-4618	ANAA
187-51062		1	DR309								
187-51067		1	DR284								
187-51078		2	CU 26	X1							
187-51079		1	CR310								
187-51080		1	CR 72								
187-51106		6		M		O					
187-52007	191 - 22	5	CR314	P1	F	O	C		R	1560-048-1581	ANAA
	191 - 36										
187-52072- 7	51 - 33	2		M		O					
187-52073	51 - 32	2		M		O					
187-52074	51 - 31	2		M		O					
187-52207	192 - 23	2									
187-52214	181 - 25	1		M		O					
187-52249	177 - 6	1	CR 71	P					R	5310-275-3619	ANAA
187-52252	181 - 28	1	CR 70	M		O					
187-52255		1									
187-52255- 15	181	1							R	1560-315-5752	ANAA
187-52255- 25	181	1		P1					R	1560-098-1476	ANAA
187-52257	181 - 24	1	CR 69	M		O					
187-53339		1	CR 79	M		O					
187-54083	296 - 4	2	CR 76	M		O			R	5930-048-1628	ANAA
187-54997- 3	310 - 1	1		M		O					
187-58029- 11	142 - 21	2		P1	F	O	S		R	1650-697-3722	ANAA
187-58039	130 - 18	2	AQ 91	P1	F	O	R		R	1650-026-2551	ANAA
187-58039- 11	130 - 18	2	AQ 91	P1	F	O	R		R	1650-694-8122	ANAA
187-58060	163 - 45	2	CR344	M		O					
187-58060- 3		2	CR344	M		O					
187-58136- 9	142 - 29	2		X1							
187-58137- 3	142 - 22	2		X1							
187-58139	142 - 34	2		M		O					
187-58149		1									
187-58281		1	CS107	M		O					
187-58281- 3		2	CS107	M		O					
187-58281- 5		2	CS107	M		O					
187-58281- 7		2	CS107	M		O					
187-58281- 9		2	CS107	M		O					
187-58281- 10		1	CS107	M		O					
187-58281- 11		2	CS107	M		O					
187-58282		1	CR 33	M		O					
187-58283		1	CR 32	M		O					
187-58334	152 - 33	1		P	F	O	S		R	1650-219-2215	ANAA
187-58349- 3		1	CR353	M		O					
187-58349- 5		1	CR353	M		O					
187-58363- 5	355	1									
187-58368- 5	136 - 9	1	CS108	M		F					
	137 - 12										
	137 - 25										
	355										
	PG. 1019										
	PG. 1020										
	PG. 1021										
	PG. 1026										
	PG. 1027										
187-58368- 19	136 - 12	1	CS108	M		F					
	137 - 9										
	137 - 22										
	355										
	PG. 1019										
	PG. 1020										
	PG. 1021										
	PG. 1026										
	PG. 1027										
187-58382- 9		1	CU148	X1							
187-58482		2	CS113	P1	F	O	S		R	1650-026-2559	ANAA
187-58482- 3		2	CS113	X1							
187-58482- 5		2	CS113	X1							
187-58483		2	CR 31	M		O					

PART NUMBER	FIGURE AND INDEX	TOTAL QTY.	MICRO-FILM NUMBER	MAINTENANCE CODE DATA: SOURCE CODE	INSTL CAPABILITY	PRE-INSTL CAPABILITY	RECOVERABILITY	SUPPORT EQUIPMENT	FEDERAL STOCK NUMBER DATA: COGNIZANCE CODE	FEDERAL STOCK NUMBER	MFG. CODE (TSMC)
187-58487- 3		2	CS114	P1	F	O	S		R	1650-026-2561	ANAA
187-58488		2	CR357	X1							
187-58491- 3		2	CR 28	X1							
187-58492		2	CR359	M		O					
187-58494		2	CP360	M		O					
187-587101	131 - 76	2	CS116	M		O					
187-587117	131 - 88	1		M		O					
187-587126	131 - 92	1		M		O					
187-587127	131 - 89	1		M		O					
187-587128	131 - 94	1		M		O					
187-587129	131 - 87	1		M		O					
187-587130	131 - 90	1		M		O					
187-58736		1	DR244								
187-63160	333 - 23	1		P1	F	O	C		R	1095-347-7880	B210
187-63161	333 - 24	1		M		O					
187-73011	PG. 1004	2									
187-73011-101	PG. 1004	2		P1					R	8340-562-4915	SNAA
1872522		12									
190-31622- 1	74 - 14	4		M		O					
190-31622- 2	74 - 15	4		M		O					
190-58737- 25		2		P1	F	O	S		R	1650-031-5638	ANAA
190-58737- 75		2		X1							
190-58737-125		2		X1							
191-14884	22 - 42										
	22 - 43										
	22 - 44										
	14 -280	92	CR396	P1	F	O	C		R	5305-206-6901	ANAA
	15 - 89										
	15 -279										
191-48255- 5		4		M		O					
191-48255- 9		2		M		O					
191-48255- 11		4		M		O					
191-48255- 12		4		M		O					
191-48255- 13		4		M		O					
191-48255- 15		4		M		O					
191-48255- 19		4		M		O					
191-48255- 21		2		M		O					
191-48255- 22		2		M		O					
191-48255- 23		2		M		O					
191-48255- 25		2		M		O					
191-48255- 27		2		M		O					
191-48255- 29		2		X1							
191-48255- 30		2		X1							
191-48255- 33		4		M		O					
191-48255- 35		4		M		O					
191-48255- 37		2		M		O					
191-48255- 38		2		M		O					
191-48255- 39		4									
191-48255- 41		2		M		O					
191-48255- 51	116 - 80	2		P1	F	O	S		P	1640-915-5755	ANAA
191-48270- 1	116 - 83	2		M		O					
191-48270- 2	116	2		M		O					
191-48318- 1	116 - 82	2	DR295	M		O					
191-48318- 2	116	2	DR295	M		O					
1911		1									
1911-1	16 -157	1									
19118		2									
192-24410- 3		8									
192-24411	92 - 18	1		M		O					
192-58711	128 -104	15	CR 60								
	131 - 40										
192-58725	131 - 59	2		M		O					
192-58735	131 - 62	2		M		O					
192-58737	131	2	DR285	M		O					
192-58737- 3	131 - 61	2	DR285	M		O					
192-58745- 3	131 - 65	2	DR291	P1	F	O	S		P	1600-C00-2391	ANAA
192-58799	131 - 58	2	DR286	M		O					
192-61098	PG. 1006	1									
192-61099	PG. 1006	1									
192-63039		1	DR245								
194-05007		1	DP193								
194-05010		1	DG177								
194-05011		1	DG178								
194-05012		1	DG179								
194-14884	22 - 42	41									
194-31005	33 - 46	1	BH261								
194-31005- 1	35 - 1	1	BH261	P1	F	O	R		R	1560-373-6779	ANAA
194-31005- 2	35	1	BH261	P1	F	O	R		R	1560-373-6780	ANAA
194-31005- 3		1	BH261	X1							
194-31005- 4		1	BH261	X1							
194-31005- 5		1	BH261	M		O					
194-31005- 6		1	BH261	M		O					
194-31005- 7		1	BH261	M		O					
194-31005- 8		1	BH261	M		O					
194-31005- 9		1	BH261	M		O					
194-31005- 10		1	BH261	M		O					
194-31005- 11		1	BH261	M		O					
194-31005- 12		1	BH261	M		O					
194-31005- 13		1	BH261	M		O					
194-31005- 14		1	BH261	M		O					
194-31005- 15		1	BH261	M		O					
194-31005- 16		1	BH261	M		O					
194-31005- 17		1	BH261	M		O					
194-31005- 18		1	BH261	M		O					
194-31005- 19		1	BH261	M		O					
194-31005- 20		1	BH261	M		O					
194-31005- 21		1	BH261	M		O					
194-31005- 22		1	BH261	M		O					
194-31005- 23		1	BH261	M		O					
194-31005- 24		1	BH261	M		O					
194-31005- 25		1	BH261	M		O					
194-31005- 26		1	BH261	M		O					
194-31005- 27		1	BH261	M		O					
194-31005- 28		1	BH261	M		O					
194-31005- 29		1	BH261	M		O					
194-31005- 30		1	BH261	M		O					
194-31005- 31		1	BH261	M		O					
194-31005- 32		1	BH261	M		O					
194-31005- 35		1	BH261	M		O					
194-31005- 36		1	BH261	M		O					
194-31005- 37		1	BH261	M		O					
194-31005- 38		1	BH261	M		O					
194-31005- 39		1	BH261	M		O					
194-31005- 40		1	BH261	M		O					
194-31005- 41		1	BH261	M		O					
194-31005- 43		1	BH261	M		O					
194-31005- 45		1	BH261	M		O					
194-31005- 47		1	BH261	M		O					
194-31005- 49		1	BH261	M		O					
194-31005- 51		1	BH261	M		O					
194-31005-121	35 - 2	1	BH261	P1	F	O	R		R	1560-508-6827	ANAA
194-31006	33 - 43	2	AS 36	M		F					
194-31006- 3	33	2	AS 36	M		F					
194-31007- 1		1	AS 35	M		O					
194-31007- 2		1	AS 35	M		O					
194-31007- 5		1	AS 35	M		O					
194-31007- 6		1	AS 35	M		O					
194-31008	39 - 48	1	CL353	M		O					
194-310102- 3	41 - 5	4	AP106	P1	F	O	C		R	1560-341-4619	ANAA
194-310103- 3	41 - 8	4	BZ346	M		F					
194-310104	41	4	AW407	M		O					
194-310104- 3	41 - 10	4	AW407	M		O					
194-310105	41 - 9	4	BZ345	M		O					
194-310106	41 - 3	4	AS 73	M		O					
194-310106- 3		4	AS 73	M		O					
194-310106- 5		4	AS 73	M		O					
194-310106- 6		4	AS 73	M		O					
194-310107	41 - 6	4	BZ344	P	F	O	C		R	5310-350-1964	ANAA
194-310108	41 - 4	4	CF111	M		O					
194-310109- 3		2	CN 93	M		O					
194-310109- 7		1	CN 93	M		O					
194-310112	41 - 23	2	AP 98	P1	F	O	S		R	1560-344-8422	ANAA
194-31012		1	AX188								
194-31012- 3		1	AX188	M		O					
194-31012- 5		1	AX188	M		O					
194-31012- 50	39 - 62	1	AX188	P1	F	O	S		R	1560-031-4783	ANAA
194-31012-101	39	1	AX188	P1	F	O	S		R	1560-333-7855	ANAA
194-31015- 1	35 - 18	1	CE 43	M		O					
194-31015- 2	35	1	CE 43	M		O					
194-31015- 3	35 - 19	2	CE 43	M		O					
194-31015- 5		1	CE 43	M		O					
194-31015- 6		1	CE 43	M		O					
194-31015- 7		1	CE 43	M		O					
194-31015- 8		1	CE 43	M		O					
194-31015- 9		1	CE 43	M		O					
194-31015- 10		1	CE 43	M		O					
194-31016- 1	35 - 24	1	BB 70	M		O					
194-31016- 2	35	1	BB 70	M		O					
194-31016- 3	35 - 28	1	BB 70	M		O					
194-31016- 4	35	1	BB 70	M		O					
194-31016- 7		1	BB 70	M		O					
194-31016- 8		1	BB 70	M		O					
194-31016- 9		1	BB 70	M		O					
194-31016- 10		1	BB 70	M		O					
194-31017	42 - 40	2	CH439	M		O					
194-31018	42 - 37	2	CH440	P	F	O	C		R	1560-344-8423	ANAA
194-31018- 3	42 - 38	2	CH440	M		O					
194-31019	39 - 33	1	CX136	P1					R	1560-373-6785	ANAA
194-31019- 3		1	CX136	M		O					
194-31019- 5		1	CX136	M		O					
194-31019- 9		1	CX136	M		O					
194-31019- 31	39 - 54	1	CX136								
194-31019- 41	39 - 55	1	CX136								
194-31020	39 - 73	1		P1	F	O	S		R	1560-373-6786	ANAA
194-31020- 3		1		M		O					
194-31020- 5		1		M		O					
194-31020- 7		1		M		O					
194-31020- 9		1		M		O					
194-31020- 11		1		M		O					
194-31020- 13	39 - 75	1		M		O					
194-31020- 15		1		M		O					
194-31020- 17	39 - 76	1		M		O					
194-31020- 19		1		M		O					
194-31021	39	1		P1	F	O	S		R	1560-373-6787	ANAA
194-31021- 3		1		M		O					
194-31021- 5		1		M		O					
194-31021- 7		1		M		O					
194-31021- 9		1		M		O					
194-31021- 11		1		M		O					
194-31021- 13		1		M		O					
194-31021- 15	39	1		M		O					
194-31021- 17	39	1		M		O					
194-31021- 19		1		M		O					
194-31023- 1	39 - 1	1	AZ 65	P1	F	O	S		R	1560-373-6791	ANAA
	39 - 2										
194-31023- 2	39	1	DL207	P1	F	O	S		R	1560-373-6792	ANAA
194-31023- 11	39 - 1	1	DL207						R	1560-372-7786	ANAA
	39 - 2										
194-31023- 12	39	1	DL207						R	1560-372-7787	ANAA
194-31036		1	DH270								
194-31040		1	DH268								
194-31084		1	DH271								
194-31093- 1	35 - 30	1									
194-31093- 2	35	1									
194-31094- 5	41 - 59	2	CX 97	P1	F	O	S		R	1560-031-4784	ANAA
194-31103		1	BP219	M		O					
194-31107		1	CW169	M		O					
194-31108		1	AQ 61	M		O					
194-31110- 1	37 - 10	1	AP176	M		O					
194-31110- 2		1	AP176								

PART NUMBER	FIGURE AND INDEX	TOTAL QTY.	MICRO-FILM NUMBER	MAINTENANCE CODE DATA: SOURCE CODE	INST'L CAPABILITY	PRE-INST'L CAPABILITY	RECOVERABILITY	SUPPORT EQUIPMENT	FEDERAL STOCK NUMBER DATA: COGNIZANCE CODE	FEDERAL STOCK NUMBER	MFG. CODE (TSMC)
194-31110- 3		1	AP176	M		0					
194-31110- 4	37	1	AP176	M		0					
194-311114- 3		1	CX134	M		0					
194-311116	34 - 39	1									
194-31112- 3		1	DL154								
194-31112- 4		1	DL154								
194-31112- 5		1	DL154								
194-31112- 6		1	DL154								
194-31112- 7		1	DL154	M		0					
194-31112- 9		1	DL154	M		0					
194-31112- 11		1	DL154	M		0					
194-31112- 13		1	DL154	M		0					
194-31112- 17		2	DL154	M		0					
194-31112- 19		1	DL154	M		0					
194-31112- 21		1	DL154	M		0					
194-31112- 22		1	DL154	M		0					
194-31112- 23		2	DL154	M		0					
194-31112- 25		4	DL154	M		0					
194-31112- 29		2	DL154	M		0					
194-31112- 31		1	DL154	M		0					
194-31112- 41		1	DL154	M		0					
194-31112- 42		1	DL154	M		0					
194-31112- 43		1	DL154	M		0					
194-31112- 44		1	DL154								
194-31112- 45		2	DL154								
194-31112- 51		2	DL154								
194-31112- 55		1	DL154	M		0					
194-31112- 71		2	DL154								
194-31112- 73		2	DL154	M		0					
194-31112- 75		1	DL154	M		0					
194-31112- 77		1	DL154	M		0					
194-31112- 78		1	DL154	M		0					
194-31112- 79		1	DL154	M		0					
194-31112- 80		1	DL154	M		0					
194-31112- 81		1	DL154	M		0					
194-31112-117		1	DL154	M		0					
194-31112-118		1	DL154	M		0					
194-31112-119		2	DL154	M		0					
194-31112-127		1	DL154	M		0					
194-31112-133		1	DL154	M		0					
194-31112-134		1	DL154	M		0					
194-31112-135		1	DL154	M		0					
194-31112-137		1	DL154	M		0					
194-31112-139		2	DL154	M		0					
194-31112-141	33 - 40	1	DL154	M		0					
194-31112-143		1	DL154	M		0					
194-31112-145		1	DL154	M		0					
194-31112-147		1	DL154	M		0					
194-31112-149		1	DL154	M		0					
194-31112-151	37	1	DL154	P1	0	0	S				
194-31112-155		1	DL154	M		0					
194-31112-159		1	DL154	M		0					
194-31112-161	37	1	DL154	P1	0	0	S				
194-31112-163		1	DL154	M		0					
194-31112-165		1	DL154	M		0					
194-31112-167		1	DL154	M		0					
194-31112-169		1	DL154	M		0					
194-31112-171		2	DL154	M		0					
194-31112-173		1	DL154	M		0					
194-31112-175		1	DL154	M		0					
194-31112-177		1	DL154	M		0					
194-31112-179		1	DL154	M		0					
194-31112-181	33	1	DL154	M		0					
194-31112-183	33	1	DL154	M		0					
194-31112-185		1	DL154	M		0					
194-31112-186	33	1									
194-31112-187		1	DL154	M		0					
194-31112-189		1	DL154	M		0					
194-31112-191		1	DL154	M		0					
194-31112-193		1	DL154	M		0					
194-31112-197		1	DL154	M		0					
194-31112-201	37 - 1	1	DL154	P1	0	0	S		P	1560-031-4785	ANAA
194-31112-203		1	DL154	M		0					
194-31112-207		1	DL154	M		0					
194-31112-209		1	DL154	M		0					
194-31112-211		1	DL154	M		0					
194-31112-215	205 - 87	1	DL154	M		0					
194-31112-217	205 - 88	1	DL154	M		0					
194-31112-225		1	DL154	M		0					
194-31112-227		1	DL154	M		0					
194-31112-229		1	DL154	M		0					
194-31112-231		1	DL154	M		0					
194-31112-232		1	DL154	M		0					
194-31112-701	37	1	DL154	P1	0	0	S		R	1560-336-0993	ANAA
194-31112-751		1	DL154						R	1560-588-6992	ANAA
194-31112-761	37	1	DL154	P1	0	0	S		R	1560-510-1124	ANAA
194-31112-771	37	1		P2		0	S		R	1560-600-3812	ANAA
194-31112-801	37	1	DL154	P1	0	0	S		P	1560-544-8430	ANAA
194-31116- 3		1	DK 49								
194-31116- 7		1	DK 49	M		0					
194-31116- 9		1	DK 49	M		0					
194-31116- 11		1	DK 49	M		0					
194-31116- 13		1	DK 49	M		0					
194-31116- 15		1	DK 49	M		0					
194-31116- 21		1	DK 49	M		0					
194-31116- 23		1	DK 49	M		0					
194-31116- 25		1	DK 49	M		0					
194-31116- 27		1	DK 49	M		0					
194-31116- 29		1	DK 49	M		0					
194-31116- 31		1	DK 49	M		0					
194-31116- 33		1	DK 49	M		0					
194-31116- 35		1	DK 49	M		0					
194-31116- 37		1	DK 49	M		0					
194-31116- 39		1	DK 49	M		0					
194-31116- 41		1	DK 49	M		0					
194-31116- 45		1	DK 49	M		0					
194-31116- 47		2	DK 49	M		0					
194-31116- 49		1	DK 49	M		0					
194-31116- 51		1	DK 49	M		0					
194-31116- 53		1	DK 49	M		0					
194-31116- 55		1	DK 49	M		0					
194-31116- 57		1	DK 49	M		0					
194-31116- 59		1	DK 49	M		0					
194-31116- 71		1	DK 49	M		0					
194-31116-101	37	1	DK 49	M		0					
194-31116-103		1	DK 49	M		0					
194-31116-105		1	DK 49	M		0					
194-31116-151	37	1	DK 49	M		0					
194-31122		1	DR112								
194-31123		1	DL 12								
194-31123- 5		1	DL 12	M		0					
194-31123- 7		1	DL 12	M		0					
194-31123- 9		1	DL 12	M		0					
194-31123- 13		1	DL 12	M		0					
194-31123- 15		1	DL 12	M		0					
194-31123- 25		1	DL 12	M		0					
194-31123- 27		1	DL 12	M		0					
194-31123- 29		1	DL 12	M		0					
194-31123- 31		1	DL 12	M		0					
194-31123- 37		1	DL 12	M		0					
194-31123- 41		1	DL 12	M		0					
194-31123- 45		1	DL 12	M		0					
194-31123- 47		1	DL 12	M		0					
194-31123- 49		1	DL 12	M		0					
194-31123- 51	37 - 7	1	DL 12	M		0					
194-31123- 61		1	DL 12	M		0					
194-31123- 63		1	DL 12	M		0					
194-31123- 65		1	DL 12	M		0					
194-31123- 67		1	DL 12	M		0					
194-31123- 69		1	DL 12	M		0					
194-31123-151	37	1	DL 12	M		0					
194-31123-201	37	1	DL 12	M		0					
194-31124- 5		1	CE 3	M		0					
194-31124- 7		1	CE 3	M		0					
194-31124- 9		1	CE 3	M		0					
194-31124- 13		1	CE 3	M		0					
194-31124- 15		1	CE 3	M		0					
194-31124- 25		1	CE 3	M		0					
194-31124- 27		1	CE 3	M		0					
194-31124- 29		1	CE 3	M		0					
194-31124- 31		1	CE 3	M		0					
194-31124- 33		1	CE 3	M		0					
194-31124- 35		1	CE 3	M		0					
194-31124- 41		1	CE 3	M		0					
194-31124- 43		1	CE 3	M		0					
194-31124- 47		1	CE 3	M		0					
194-31124- 49		1	CE 3	M		0					
194-31124- 53		1	CE 3	M		0					
194-31124- 57		1	CE 3	M		0					
194-31124- 59		1	CE 3	M		0					
194-31124- 61		1	CE 3	M		0					
194-31124- 63		1	CE 3	M		0					
194-31124- 65		1	CE 3	M		0					
194-31124- 67		1	CE 3	M		0					
194-31124- 69		1	CE 3	M		0					
194-31124- 71		1	CE 3	M		0					
194-31124- 73		1	CE 3	M		0					
194-31124-101	37 - 19	1	CE 3	M		0					
194-31124-151	37	1	CE 3	M		0					
194-31124-161	37	1	CE 3	M		0					
194-31125- 5		1	BT 11	M		0					
194-31125- 11		1	BT 11	M		0					
194-31125- 17		1	BT 11								
194-31125- 21		1	BT 11								
194-31125- 29		1	BT 11								
194-31125- 31		1	BT 11								
194-31125- 33		1	BT 11	M		0					
194-31125- 43		1	BT 11	M		0					
194-31125- 45		1	BT 11	M		0					
194-31125- 47		1	BT 11	M		0					
194-31125- 49		1	BT 11	M		0					
194-31125- 51		1	BT 11	M		0					
194-31125- 52		1	BT 11	M		0					
194-31125- 59		1	BT 11	M		0					
194-31125- 60		1	BT 11	M		0					
194-31125- 61		1	BT 11	M		0					
194-31125- 63		1	BT 11	M		0					
194-31125- 64		1	BT 11	M		0					
194-31125- 67		1	BT 11	M		0					
194-31125- 68		1	BT 11	M		0					
194-31125- 69		1	BT 11	M		0					
194-31125- 71		1	BT 11	M		0					
194-31125- 73		1	BT 11	M		0					
194-31125- 75		1	BT 11	M		0					
194-31125- 77		1	BT 11	M		0					
194-31125- 78		1	BT 11	M		0					
194-31125- 85		1	BT 11								
194-31125- 87		1	BT 11								
194-31125- 89		1	BT 11	M		0					
194-31125- 91		1	BT 11	M		0					
194-31125- 92		1	BT 11	M		0					
194-31125- 93		1	BT 11	M		0					
194-31125- 95		1	BT 11	M		0					
194-31125- 97		1	BT 11	M		0					
194-31125- 98		1	BT 11	M		0					
194-31125-103		1	BT 11								
194-31125-104		1	BT 11								
194-31125-105		1	BT 11	M		0					
194-31125-106		1	BT 11	M		0					
194-31125-107		1	BT 11	M		0					

PART NUMBER	FIGURE AND INDEX	TOTAL QTY.	MICRO-FILM NUMBER	MAINTENANCE CODE DATA: SOURCE CODE	INSTL CAPABILITY	PRE-INSTL CAPABILITY	RECOVERABILITY	SUPPORT EQUIPMENT	COGNIZANCE CODE	FEDERAL STOCK NUMBER DATA: FEDERAL STOCK NUMBER	MFG. CODE (TSMC)
194-31125-109		1	BT 11								
194-31125-111		1	BT 11	M		O					
194-31125-113		1	BT 11	M		O					
194-31125-115		1	BT 11	M		O					
194-31125-117		1	BT 11	M		O					
194-31125-119		1	BT 11	M		O					
194-31125-120		1	BT 11	M		O					
194-31125-121		1	BT 11	M		O					
194-31125-122		1	BT 11	M		O					
194-31125-129		1	BT 11	M		O					
194-31125-133		1	BT 11	M		O					
194-31125-135		1	BT 11	M		O					
194-31125-147		1	BT 11	M		O					
194-31125-148		1	BT 11	M		O					
194-31125-201		1	BT 11								
194-31125-251		1	BT 11	M		O					
194-31125-34		1	BT 11	M		O					
194-31125-401		1	BT 11	M		O					
194-31125-42		1	BT 11	M		O					
194-31126- 1		1	CN 41								
194-31126- 2		1	CN 41	M		O					
194-31131- 1		1	BC 19	M		O					
194-31131- 2		1	BC 19	M		O					
194-31131- 3		1	BC 19	M		O					
194-31131- 4		1	BC 19	M		O					
194-31131- 9		2	BC 19	M		O					
194-31131- 10		1	BC 19	M		O					
194-31133	35 - 42	2	BB 17	M		O					
194-31133- 3	35 - 43	2	BB 17	M		O					
194-31134		1	CF120	M		O					
194-31139		1	CF121								
194-31140- 3	35 - 59	4	BB 18	M		O					
194-31140- 5	35 - 69	2	BB 18	M		O					
194-31140- 7	35 - 60	4	BB 18	M		O					
194-31140- 9	35 - 70	2	BB 18	M		O					
194-31140- 11	35 - 63	4	BB 18	M		O					
194-31140- 13	35 - 64	4	BB 18	M		O					
194-31143- 1		1	CH448	M		O					
194-31143- 2		1	CH448	M		O					
194-31144		1	CH449	M		O					
194-31147		1	CH450	M		O					
194-31148		1	CH451	M		O					
194-31149		1		M		O					
194-31151	38 - 1	1	BR 50	M		O					
194-31151- 3		1	BR 50	M		O					
194-31151- 5		1	BR 50	M		O					
194-31151- 7		1	BR 50	M		O					
194-31151- 9		1	BR 50	M		O					
194-31151- 11		1	BR 50	M		O					
194-31151- 13		1	BR 50	M		O					
194-31151- 15		1	BR 50	M		O					
194-31151- 17		1	BR 50	M		O					
194-31151- 19		1	BR 50	M		O					
194-31151- 25		1	BR 50	M		O					
194-31151-101	38	1	BR 50	A		O					
194-31152	38 - 2	1	CP 36								
194-31152- 5		1	CP 36	M		O					
194-31152- 7		1	CP 36	M		O					
194-31152- 9		1	CP 36	M		O					
194-31152- 11		1	CP 36	M		O					
194-31152- 13		1	CP 36	M		O					
194-31152- 15		1	CP 36	M		O					
194-31152- 17		1	CP 36	M		O					
194-31152- 23		1	CP 36	M		O					
194-31152- 25		2	CP 36								
194-31152- 37		1	CP 36	M		O					
194-31152- 39		1	CP 36	M		O					
194-31152- 43		1	CP 36	M		O					
194-31152- 45		1	CP 36	M		O					
194-31152- 47		1	CP 36	M		O					
194-31152- 49		1	CP 36	M		O					
194-31152- 51	38 - 2	1	CP 36	A		O					
194-31152- 53		1	CP 36	M		O					
194-31152-151	38	1	CP 36	A		O					
194-31153- 1		1	CM453	M		O					
194-31153- 2		1	CM453	M		O					
194-31154		1	AQ 62	M		O					
194-31155- 1		1	CP 1	M		O					
194-31155- 2		1	CP 1	M		O					
194-31159- 1		1	AU139	M		O					
194-31159- 2		1	AU139	M		O					
194-31159- 3		1	AU139	M		O					
194-31159- 4		1	AU139	M		O					
194-31159- 5		1	AU139	M		O					
194-31159- 6		1	AU139	M		O					
194-31159- 7		1	AU139	M		O					
194-31159- 8		1	AU139	M		O					
194-31159- 9		1	AU139	M		O					
194-31159- 10		1	AU139	M		O					
194-31159- 11		1	AU139	M		O					
194-31159- 12		1	AU139	M		O					
194-31161- 3		1	AG 15	M		O					
194-31161- 4		1	AG 15	M		O					
194-31161- 6		1	AG 15	M		O					
194-31167		1	BB 71	M		O					
194-31168- 1		1	CH454	M		O					
194-31168- 2		1	CH454	M		O					
194-31170- 1		1	CP 2	M		O					
194-31170- 2		1	CP 2	M		O					
194-31170- 11		1		M		O					
194-31171- 1		1	B5166	M		O					
194-31171- 2		1	B5166	M		O					
194-31172- 1		1	BB 72	M		O					
194-31172- 2		1	BB 72	M		O					
194-31172- 3		1	BB 72								
194-31172- 4		1	BB 72	M		O					
194-31172- 5		1	BB 72	M		O					
194-31174		1	CM226	M		O					
194-31174- 3		1	CM226	M		O					
194-31174- 5		1	CM226	M		O					
194-31175- 1		1	BB 73	M		O					
194-31175- 3		1	BB 73	M		O					
194-31175- 4		1	BB 73	M		O					
194-31182		1	CF122	M		O					
194-31183- 1		1	CN 47	M		O					
194-31183- 2		1	CN 47								
194-31187- 1		1	CL370								
194-31187- 2		1	CL370								
194-31189- 1		1	AW202	M		O					
194-31189- 2		1	AW202	M		O					
194-31190- 3		1	CH455	M		O					
194-31190- 4		1	CH455	M		O					
194-31190- 5		1	CH455	M		O					
194-31190- 6		1	CH455	M		O					
194-31191- 3		1	CH456	M		O					
194-31191- 4		1	CH456	M		O					
194-31191- 5		1	CH456	M		O					
194-31191- 6		1	CH456	M		O					
194-31192- 3		1	CH457	M		O					
194-31192- 4		1	CH457	M		O					
194-31192- 5		1	CH457	M		O					
194-31192- 6		1	CH457	M		O					
194-31193- 3		1	CH458	M		O					
194-31193- 4		1	CH458	M		O					
194-31193- 5		1	CH458	M		O					
194-31193- 6		1	CH458	M		O					
194-31194	37 - 13	1	CL371	M		O					
194-31194- 3		1	CL371	M		O					
194-31194- 5		1	CL371	M		O					
194-31195- 1		1	AW492	M		O					
194-31195- 2		1	AW492	M		O					
194-31201- 5		1	CV133	M		O					
194-31201- 7		1	CV133	M		O					
194-31201- 9		1	CV133	M		O					
194-31201- 11		1	CV133	M		O					
194-31201- 13		1	CV133	M		O					
194-31201- 15		1	CV133	M		O					
194-31201- 17		1	CV133	M		O					
194-31201- 19		1	CV133	M		O					
194-31201- 21		1	CV133	M		O					
194-31201- 23		1	CV133	M		O					
194-31201- 25		1	CV133	M		O					
194-31201- 27		1	CV133	M		O					
194-31201- 31		1	CV133	M		O					
194-31201- 33		1	CV133								
194-31201- 41		1	CV133	M		O					
194-31201- 43		1	CV133	M		O					
194-31201- 45		1	CV133	M		O					
194-31201- 49		1	CV133	M		O					
194-31201- 51		1	CV133	M		O					
194-31201- 55		1	CV133	M		O					
194-31201- 57		1	CV133	M		O					
194-31201- 63		1	CV133	M		O					
194-31201- 65		1	CV133	M		O					
194-31201- 67		1	CV133	M		O					
194-31201- 69		1	CV133	M		O					
194-31201-101		1	CV133	M		O					
194-31201-201		1	CV133	M		O					
194-31201-301		1	CV133	M		O					
194-31201-401		1	CV133	M		O					
194-31202- 5		1	BN 96	M		O					
194-31202- 7		1	BN 96	M		O					
194-31202- 9		1	BN 96	M		O					
194-31202- 11		1	BN 96	M		O					
194-31202- 13		1	BN 96	M		O					
194-31202- 15		1	BN 96	M		O					
194-31202- 17		1	BN 96	M		O					
194-31202- 19		1	BN 96	M		O					
194-31202- 21		1	BN 96	M		O					
194-31202- 23		1	BN 96	M		O					
194-31202- 25		1	BN 96	M		O					
194-31202- 27		1	BN 96	M		O					
194-31202- 29		1	BN 96	M		O					
194-31202- 31		1	BN 96	M		O					
194-31202- 33		1	BN 96	M		O					
194-31202- 35		1	BN 96	M		O					
194-31202- 37		1	BN 96	M		O					
194-31202- 39		1	BN 96	M		O					
194-31202- 41		1	BN 96	M		O					
194-31202- 43		1	BN 96	M		O					
194-31202- 45		1	BN 96	M		O					
194-31202- 47		1	BN 96	M		O					
194-31202- 51		1	BN 96	M		O					
194-31202- 53		1	BN 96	M		O					
194-31202- 61		1	BN 96	M		O					
194-31202- 63		2	BN 96	M		O					
194-31202- 71		1	BN 96	M		O					
194-31202-101		1	BN 96	M		O					
194-31202-201		1	BN 96	M		O					
194-31203		1	CK 80	M		O					
194-31203- 3		1	CK 80	M		O					
194-31205	39	1	BO 58	M		O					
194-31206		1	CL372	M		O					
194-31206- 3		1	CL372	M		O					
194-31206- 5		1	CL372	M		O					
194-31208		1	AP134	M		O					
194-31209		1	BO 90	M		O					
194-31210- 3		1	AU 23	M		O					
194-31210- 5		1	AU 23	M		O					
194-31210- 7		1	AU 23	M		O					

PART NUMBER	FIGURE AND INDEX	TOTAL QTY.	MICRO-FILM NUMBER	MAINTENANCE CODE DATA: SOURCE CODE	INSTL CAPABILITY	PRE-INSTL CAPABILITY	RECOVERABILITY	SUPPORT EQUIPMENT	COGNIZANCE CODE	FEDERAL STOCK NUMBER DATA: FEDERAL STOCK NUMBER	MFG. CODE (TSMC)
194-312111- 3		1	AX148	M		O					
194-312111- 7		1	AX148	M		O					
194-312129		1		M		O					
194-312131		1	DR113								
194-31214-401		1	AX155								
194-31214-411	43 - 83	1	AX155	A		O					
194-31214-751	43	1	AX155	A		O					
194-31214-771	43	1	AX155	A		O					
194-31215		2	CH459	M		O					
194-31216- 3		1	AY155	M		O					
194-31216- 7		1	AY155	M		O					
194-31216- 8		1	AY155	M		O					
194-31216- 11		2	AY155	M		O					
194-31216- 13		1	AY155	M		O					
194-31216- 15		2	AY155	M		O					
194-31216- 17		1	AY155	M		O					
194-31216- 19		1	AY155	M		O					
194-31216- 21		1	AY155	M		O					
194-31216- 22		1	AY155	M		O					
194-31216- 23		1	AY155	M		O					
194-31216- 25		1	AY155	M		O					
194-31216- 27		1	AY155	M		O					
194-31216- 28		1	AY155	M		O					
194-31216- 29		1	AY155	M		O					
194-31216-151		1	AY155								
194-31216-251		1	AY155	M		O					
194-31216-401		1	AY155	M		O					
194-31216-411		1	AY155	M		O					
194-31225- 3		1	BQ117	M		O					
194-31228- 7		1	CW119	M		O					
194-31229- 1		1	AU 90								
194-31229- 2		1	AU 90								
194-31229- 3		1	AU 90	M		O					
194-31229- 4		1	AU 90	M		O					
194-31229- 5		2	AU 90	M		O					
194-31229- 6		2	AU 90	M		O					
194-31229- 7		1	AU 90								
194-31229- 8		1	AU 90								
194-31229- 9		2	AU 90	M		O					
194-31229- 10		2	AU 90	M		O					
194-31229- 11		2	AU 90	M		O					
194-31229- 12		2	AU 90	M		O					
194-31229- 13		1	AU 90								
194-31229- 14		1	AU 90								
194-31229- 15		1	AU 90	M		O					
194-31229- 16		1	AU 90	M		O					
194-31229- 17		2	AU 90	M		O					
194-31229- 19		4	AU 90	M		O					
194-31229- 21		2	AU 90	M		O					
194-31229- 23		2	AU 90	M		O					
194-31229- 24		2	AU 90	M		O					
194-31229- 25		2	AU 90	M		O					
194-31229- 27		2	AU 90	M		O					
194-31229- 51		1	AU 90	M		O					
194-31229- 53		2	AU 90	M		O					
194-31229- 55		1	AU 90	M		O					
194-31229- 56		1	AU 90	M		O					
194-31229- 57		1	AU 90	M		O					
194-31229- 58		1	AU 90	M		O					
194-31229- 61		1	AU 90	M		O					
194-31229-101	43 - 27	1	AU 90	M		O					
194-31229-102		1	AU 90	M		O					
194-31229-201	43	1	AU 90								
194-31230	43 - 31	2	CH463	M		O					
194-31230- 3		2	CH463	M		O					
194-31230- 7		2	CH463	M		O					
194-31234		1	CM255	M		O					
194-31235- 9		1	DR327	M		O					
194-31235- 11		1	DR327	M		O					
194-31235- 15		1	DR327	M		O					
194-31235- 17		1	DR327	M		O					
194-31235- 23		1	DR327	M		O					
194-31235- 33		1	DR327	M		O					
194-31235- 51		1	DR327	M		O					
194-31235-101		1	DR327	M		O					
194-31237		1	BZ148	M		O					
194-31238		1	CH464	M		O					
194-31239		1	AW207	M		O					
194-31240- 1		1	BQ 42	M		O					
194-31240- 2		1	BQ 42	M		O					
194-31241		1	CF124	M		O					
194-31242		1	AP199	M		O					
194-31243- 3		1	AW150	M		O					
194-31244		1	CH465	M		O					
194-31245- 5		1	CN 64	M		O					
194-31245- 13		1	CN 64	M		O					
194-31245- 15		1	CN 64	M		O					
194-31245- 23		1	CN 64	M		O					
194-31245- 33		1	CN 64	M		O					
194-31245- 43		1	CN 64	M		O					
194-31245- 53		1	CN 64	M		O					
194-31245- 63		1	CN 64	M		O					
194-31245-101		1	CN 64	M		O					
194-31245-201		1	CN 64	M		O					
194-31245-301		1	CN 64	M		O					
194-31245-401		1	CN 64	M		O					
194-31246		1	AZ 67	M		O					
194-31246- 5		2	AZ 67	M		O					
194-31247		1	CL374	M		O					
194-31247- 3		1	CL374	M		O					
194-31247- 5		1	CL374	M		O					
194-31248- 1		1	BQ 93	M		O					
194-31248- 2		1	BQ 93	M		O					
194-31249		1	AR 82	M		O					
194-31252		1	CX112	M		O					

PART NUMBER	FIGURE AND INDEX	TOTAL QTY.	MICRO-FILM NUMBER	MAINTENANCE CODE DATA: SOURCE CODE	INSTL CAPABILITY	PRE-INSTL CAPABILITY	RECOVERABILITY	SUPPORT EQUIPMENT	COGNIZANCE CODE	FEDERAL STOCK NUMBER DATA: FEDERAL STOCK NUMBER	MFG. CODE (TSMC)
194-31252- 3		1	CX112	M		O					
194-31252- 5		1	CX112	M		O					
194-31252- 7		1	CX112	M		O					
194-31253- 3		1	DS 38	M		O					
194-31253- 13		1	DS 38	M		O					
194-31253- 15		1	DS 38	M		O					
194-31253- 17		1	DS 38	M		O					
194-31253- 18		1	DS 38	M		O					
194-31253- 19		1	DS 38	M		O					
194-31253- 20		1	DS 38	M		O					
194-31253- 23		1	DS 38	M		O					
194-31253- 24		1	DS 38	M		O					
194-31253- 25		1	DS 38	M		O					
194-31253- 26		1	DS 38	M		O					
194-31253- 27		1	DS 38	M		O					
194-31253- 28		1	DS 38	M		O					
194-31253- 29		1	DS 38								
194-31253- 33		1	DS 38	M		O					
194-31253- 39		1	DS 38	M		O					
194-31253- 43		1	DS 38	M		O					
194-31253- 45		1	DS 38	M		O					
194-31253- 47		1	DS 38	M		O					
194-31253- 49		1	DS 38	M		O					
194-31253- 51		1	DS 38	M		O					
194-31253- 53		1	DS 38	M		O					
194-31253- 55		1	DS 38	M		O					
194-31253- 57		1	DS 38	M		O					
194-31253- 65		1	DS 38	M		O					
194-31253- 67		1	DS 38	M		O					
194-31253- 71		1	DS 38	M		O					
194-31253- 73		1	DS 38	M		O					
194-31253- 75		2	DS 38	M		O					
194-31253- 77		1	DS 38	M		O					
194-31253- 78		1	DS 38	M		O					
194-31253- 79		1	DS 38	M		O					
194-31253- 81		3	DS 38	M		O					
194-31253- 83		5	DS 38	M		O					
194-31253- 85		1	DS 38	M		O					
194-31253- 86		1	DS 38	M		O					
194-31253- 91		1	DS 38	M		O					
194-31253- 93		2	DS 38	M		O					
194-31253- 95		2	DS 38	M		O					
194-31253- 97		1	DS 38	M		O					
194-31253-109		1	DS 38	M		O					
194-31253-115		1	DS 38	M		O					
194-31253-117		1	DS 38	M		O					
194-31253-125		1	DS 38	M		O					
194-31253-126		1	DS 38	M		O					
194-31253-133		1	DS 38	M		O					
194-31253-135		1	DS 38	M		O					
194-31253-139		1	DS 38	M		O					
194-31253-141		1	DS 38	M		O					
194-31253-143		1	DS 38	M		O					
194-31253-145		1	DS 38	M		O					
194-31253-151		1	DS 38	M		O					
194-31253-155		1	DS 38	M		O					
194-31253-157		1	DS 38	M		O					
194-31253-159		1	DS 38	M		O					
194-31253-160		1	DS 38	M		O					
194-31253-161		1	DS 38	M		O					
194-31253-162		1	DS 38	M		O					
194-31253-163		2	DS 38	M		O					
194-31253-165		1	DS 38	M		O					
194-31253-166		1	DS 38	M		O					
194-31253-167		1	DS 38								
194-31253-168		1	DS 38								
194-31253-169		1	DS 38	M		O					
194-31253-171		2	DS 38	M		O					
194-31253-173		2	DS 38	M		O					
194-31253-175		1	DS 38	M		O					
194-31253-177		1	DS 38	M		O					
194-31253-179		1	DS 38	M		O					
194-31253-181		1	DS 38	M		O					
194-31253-183		1	DS 38	M		O					
194-31253-185		1	DS 38	M		O					
194-31253-191		1	DS 38	M		O					
194-31253-199		1	DS 38	M		O					
194-31253-203		1	DS 38	M		O					
194-31253-205		1	DS 38	M		O					
194-31253-207		1	DS 38	M		O					
194-31253-209		1	DS 38	M		O					
194-31253-213		1	DS 38	M		O					
194-31253-215		1	DS 38	M		O					
194-31253-217		1	DS 38	M		O					
194-31253-219		1	DS 38	M		O					
194-31253-221		1	DS 38	M		O					
194-31253-223		1	DS 38	M		O					
194-31253-245		1	DS 38	M		O					
194-31253-251		1	DS 38	M		O					
194-31253-265		1	DS 38	M		O					
194-31253-267		1	DS 38	M		O					
194-31253-301		1	DS 38	M		O					
194-31253-303		1	DS 38	M		O					
194-31253-305		1	DS 38	M		O					
194-31253-307		1	DS38M		O						
194-31253-345		2	DS 38	M		O					
194-31253-401		1	DS 38	M		O					
194-31253-551		1	DS 38	M		O					
194-31253-601		1	DS 38	M		O					
194-31253-761		1	DS 38	M		O					
194-31253-771		1	DS 38	M		O					
194-31255- 2		1	AS234	M		O					
194-31255- 3		1	AS234	M		O					
194-31255- 4		1	AS234	M		O					
194-31256		1	CL375	M		O					

PART NUMBER	FIGURE AND INDEX	TOTAL QTY.	MICRO-FILM NUMBER	MAINTENANCE CODE DATA: SOURCE CODE	INSTL CAPABILITY	PRE-INSTL CAPABILITY	RECOVERABILITY	SUPPORT EQUIPMENT	FEDERAL STOCK NUMBER DATA: COGNIZANCE CODE	FEDERAL STOCK NUMBER	MFG. CODE (TSMC)
194-31256- 3		1	CL375	M		O					
194-31257		1	BQ 94	M		O					
194-31257- 3		1	BQ 94	M		O					
194-31257- 5		1	BQ 94	M		O					
194-31258- 1		1	CH466	M		O					
194-31258- 2		1	CH466	M		O					
194-31258- 3		1	CH466	M		O					
194-31258- 4		1	CH466	M		O					
194-31260- 3		1	DK154	M		O					
194-31260- 5		1	DK154	M		O					
194-31260- 7		1	DK154	M		O					
194-31260- 11		1	DK154	M		O					
194-31261		1	AS277	M		O					
194-31262	43 - 30	2	BQ 59	M		O					
194-31263		2	BB 39	M		O					
194-31264		1	AR115	M		O					
194-31265		1	AQ 65	M		O					
194-31265- 5		1	AQ 65	M		O					
194-31265- 7		1	AQ 65	M		O					
194-31265- 9		1	AQ 65	M		O					
194-31266		1	AX263	M		O					
194-31266- 51		1	AX263	M		O					
194-31267		1	BB 19	M		O					
194-31268		1	BQ140	M		O					
194-31269		1	CL376	M		O					
194-31269- 3		1	CL376	M		O					
194-31270- 3		1	BV180	M		O					
194-31270- 5		1	BV180	M		O					
194-31270- 9		1	BV180	M		O					
194-31270- 11		1	BV180	M		O					
194-31270- 13		1	BV180	M		O					
194-31270- 15		1	BV180	M		O					
194-31270- 19		1	BV180	M		O					
194-31270-101		1	BV180	M		O					
194-31270-151		1	BV180	M		O					
194-31271- 7		1	BU169	M		O					
194-31271- 9		1	BU169	M		O					
194-31271- 13		1	BU169	M		O					
194-31271- 15		1	BU169	M		O					
194-31271- 17		1	BU169	M		O					
194-31271- 19		1	BU169	M		O					
194-31271- 23		1	BU169	M		O					
194-31271- 35		1	BU169	M		O					
194-31271- 37		1	BU169	M		O					
194-31271- 39		1	BU169	M		O					
194-31271- 63		1	BU169	M		O					
194-31271-101		1	BU169	M		O					
194-31271-501		1	BU169	M		O					
194-31271-511		1	BU169	M		O					
194-31271-551		1	BU169	M		O					
194-31272- 9		1	BU168	M		O					
194-31272- 13		1	BU168	M		O					
194-31272- 15		1	BU168	M		O					
194-31272- 21		1	BU168	M		O					
194-31272- 29		1	BU168	M		O					
194-31272- 31		1	BU168	M		O					
194-31272- 35		1	BU168	M		O					
194-31272- 37		1	BU168	M		O					
194-31272- 39		1	BU168	M		O					
194-31272- 41		1	BU168	M		O					
194-31272- 43		1	BU168	M		O					
194-31272- 45		1	BU168	M		O					
194-31272- 47		1	BU168	M		O					
194-31272- 49		1	BU168	M		O					
194-31272- 51		1	BU168	M		O					
194-31272- 55		1	BU168	M		O					
194-31272- 57		1	BU168	M		O					
194-31272- 59		1	BU168	M		O					
194-31272- 63		1	BU168								
194-31272- 65		1	BU168								
194-31272- 67		1	BU168	M		O					
194-31272- 75		1	BU168	M		O					
194-31272- 81		1	BU168	M		O					
194-31272-201		1	BU168	M		O					
194-31272-301		1	BU168	M		O					
194-31272-401		1	BU168	M		O					
194-31274- 3		1	DM 94	M		O					
194-31274- 11		1	DM 94	M		O					
194-31276- 3		1	CX 83	M		O					
194-31277		1	CB 98	M		O					
194-31277- 3		1	CB 98	M		O					
194-31279		1									
194-31279- 3		1									
194-31279- 5		1		M		O					
194-31279- 7		1		M		O					
194-31279-101		1		M		O					
194-31280		1	BQ 35	M		O					
194-31281		1	BQ 95								
194-31281- 3		1	BQ 95	M		O					
194-31281- 5		1	BQ 95	M		O					
194-31281-101		1	BQ 95	M		O					
194-31282		1	BZ343	M		O					
194-31283		1	CL377								
194-31283- 3		1	CL377	M		O					
194-31283- 5		1	CL377	M		O					
194-31283-101		1	CL377	M		O					
194-31284		1	CM467	M		O					
194-31284- 3		1	CM467	M		O					
194-31285- 9		1	AQ 66								
194-31285- 13		1	AQ 66	M		O					
194-31285-201		1	AQ 66	M		O					
194-31288		1	AS148	M		O					
194-31288- 3		1	AS148	M		O					
194-31288- 5		1	AS148	M		O					
194-31289		1	CM468	M		O					

PART NUMBER	FIGURE AND INDEX	TOTAL QTY.	MICRO-FILM NUMBER	MAINTENANCE CODE DATA: SOURCE CODE	INSTL CAPABILITY	PRE-INSTL CAPABILITY	RECOVERABILITY	SUPPORT EQUIPMENT	FEDERAL STOCK NUMBER DATA: COGNIZANCE CODE	FEDERAL STOCK NUMBER	MFG. CODE (TSMC)
194-31291- 13		1	DK 74	M		O					
194-31291- 23		1	DK 74	M		O					
194-31292		1	AS 86	M		O					
194-31296		1	BQ 96	M		O					
194-31296- 3		1	BQ 96	M		O					
194-31296- 5		1	BQ 96	M		O					
194-31297		1	AP121	M		O					
194-31318		1	CL378	M		O					
194-31341- 3		1	AU 94	M		O					
194-31344- 1		1	CM 52	M		O					
194-31344- 2		1	CM 52	M		O					
194-31369		1	BQ 36	M		O					
194-31435- 3		1	BS244								
194-31435- 5		1	BS244								
194-31435- 7		1	BS244	M		O					
194-31435- 9		1	BS244	M		O					
194-31435- 11		1	BS244	M		O					
194-31435- 21		1	BS244	M		O					
194-31435- 23		1	BS244	M		O					
194-31435- 25		1	BS244	M		O					
194-31436- 7		1	CG261	M		O					
194-31436- 11		1	CG261	M		O					
194-31436- 13		1	CG261	M		O					
194-31436- 41		1	CG261	M		O					
194-31436- 51		1	CG261	M		O					
194-31439		1	CX 56	M		O					
194-31440		1	AZ 92								
194-31455		1							R	1560-373-6809	ANAA
194-31463- 1		1	AZ 69	M		O					
194-31463- 2		1	AZ 69	M		O					
194-31464		1	AQ 77	M		O					
194-31465		1	BQ118	M		O					
194-31465- 3		1	BQ118	M		O					
194-31465- 5		1	BQ118	M		O					
194-31465- 6		1	BQ118	M		O					
194-31481- 1		1	AS149	M		O					
194-31481- 2		1	AS149	M		O					
194-31482		1	CL383	M		O					
194-31482- 3		1	CL383	M		O					
194-31482- 5		1	CL383	M		O					
194-31486- 5		1	CX 60	M		O					
194-31486- 13		1	CX 60	M		O					
194-31486-101		1	CX 60	M		O					
194-31488- 3		1	CX 54	M		O					
194-31488- 4		1	CX 54	M		O					
194-31490- 5		1	CX101								
194-31490- 6		1	CX101	M		O					
194-31490- 7		1	CX101								
194-31490- 8		1	CX101	M		O					
194-31490- 9		1	CX101	M		O					
194-31490- 11		1	CX101	M		O					
194-31490- 13		1	CX101	M		O					
194-31490- 21		1	CX101	M		O					
194-31490- 23		1	CX101								
194-31490- 25		1	CX101								
194-31490-101		1	CX101	M		O					
194-31491- 3		1	DJ270	M		O					
194-31491- 5		1	DJ270								
194-31491- 7		1	DJ270								
194-31491- 11		1	DJ270	M		O					
194-31491- 17		1	DJ270	M		O					
194-31491- 19		1	DJ270	M		O					
194-31491- 21		1	DJ270	M		O					
194-31491- 23		1	DJ270	M		O					
194-31491- 25		1	DJ270	M		O					
194-31491-101		1	DJ270	M		O					
194-31493		1	CX 37	M		O					
194-31493- 3		1	CX 37	M		O					
194-31493- 5		2	CX 37	M		O					
194-31493- 7		1	CX 37								
194-31502- 10		1									
194-31502- 11		1									
194-315107	48	1	AS 31	M		O					
194-315107- 3		1	AS 31	M		O					
194-315107- 5	48	1	AS 31	M		O					
194-315112- 3		1	CM484	M		O					
194-315112- 4		1	CM484	M		O					
194-315112- 5		1	CM484	M		O					
194-315112- 7		1	CM484	M		O					
194-315112-101	44 - 17	1	CM484	M		O					
194-315112-102	44	1	CM484	M		O					
194-315112-201		1	CM484								
194-315117- 3		1	CM485	M		O					
194-315117- 5		1	CM485	M		O					
194-315117- 7		1	CM485	M		O					
194-315117-101		1	CM485	M		O					
194-315130		1	DJ235								
194-31514		1	DM 45								
194-31519		2	CM486	M		O					
194-31520		2	CM487	M		O					
194-31523- 3		1	CM488	M		O					
194-31523- 4		1	CM488	M		O					
194-31547- 1		1	CF136	M		O					
194-31547- 2		1	CF136	M		O					
194-31562- 10	48	1	BR 66	P1	F	O	S		R	1560-031-4786	ANAA
194-31562- 11	48	1	BR 66	P1	F	O	S		R	1560-031-4787	ANAA
194-31563- 5	48 - 10	1	AP178	X1							
194-31563- 6	48	1	AP178	X1							
194-31565		2	AR 6	M		O					
194-31575- 1		1	AP148	M		O					
194-31575- 2		1	AP148	M		O					
194-31594		1	DK135								
194-31595- 3		2	AW 79	M		O					
194-31595- 5		2	AW 79	M		O					
194-31595- 7		1	AW 79	M		O					

PART NUMBER	FIGURE AND INDEX	TOTAL QTY.	MICRO-FILM NUMBER	MAINTENANCE CODE DATA: SOURCE CODE	INSTL CAPABILITY	PRE-INSTL CAPABILITY	RECOVERABILITY	SUPPORT EQUIPMENT	FEDERAL STOCK NUMBER DATA: COGNIZANCE CODE	FEDERAL STOCK NUMBER	MFG. CODE (TSMC)
194-31607		1	DN 26								
194-316101		1	DH248								
194-31652- 1	73 - 4	1	CL417	M		O					
194-31652- 2	73	1	CL417	M		O					
194-31754- 1		1	AW489	M		O					
194-31754- 2		1	AW489	M		O					
194-31781- 1		2	AW497	M		O					
194-31781- 2		2	AW497	M		O					
194-31781- 4		1	AW497	M		O					
194-31782		1	DR194								
194-31783		1	DR 81								
194-31862- 1		1	AV 25								
194-31862- 2		1	AV 25								
194-31862- 3		1	AV 25								
194-31862- 4		1	AV 25								
194-31862- 5		1	AV 25								
194-31862- 6		1	AV 25								
194-31862- 8		1	AV 25								
194-31862- 9		1	AV 25	M		O					
194-31862- 11		1	AV 25	M		O					
194-31862- 12		1	AV 25	M		O					
194-31862- 13		1	AV 25	M		O					
194-31862- 14		1	AV 25	M		O					
194-31862- 15		1	AV 25	M		O					
194-31862- 16		1	AV 25	M		O					
194-31862- 17		1	AV 25	M		O					
194-31862- 21		1	AV 25	M		O					
194-31862- 24		1	AV 25	M		O					
194-31862- 51		1	AV 25	M		O					
194-31862-101		1	AV 25	M		O					
194-31862-102		1	AV 25	M		O					
194-31872- 1		1	CE233	M		O					
194-31872- 2		1	CE233	M		O					
194-31879- 1		1	BV216	M		O					
194-31879- 2		1	BV216	M		O					
194-31880		1	CF164								
194-31880- 3		1	CF164								
194-31899- 1		1	CF165								
194-31899- 2		1	CF165								
194-31899- 3		1	CF165	M		O					
194-31899- 4		1	CF165	M		O					
194-33578- 12		1									
194-33707	200 - 6	1	AW386	M		O					
194-33707- 3		1	AW386	M		O					
194-33708	200 - 13	1	CX 96	M		O					
194-33708- 3		1	CX 96	M		O					
194-33709	200 - 14	1	CM 20								
194-33709- 5		1	CM 20	M		O					
194-33709- 9		1	CM 20	M		O					
194-33709- 11		1	CM 20	M		O					
194-33709- 51		1	CM 20	M		O					
194-33711	201 - 11	1	CF166	M		O					
194-33712	200 - 3	1	CM 22	P1	O	O	S		R	1560-048-1653	ANAA
194-33713	201 - 7	4	CF167	M		O					
194-33714	200 - 17	1	DG102	M		O					
194-33714- 3		1	BQ100	M		O					
194-33714- 5		1	BQ100	M		O					
194-33717	200 - 25	1	CM 24	M		O					
194-33717- 3		1	CM 24	M		O					
194-33719		1	DG 11								
194-33719- 1	200	1	BX249	M		O					
194-33719- 2	200	1	BX249	M		O					
194-33720	200 - 5 201 - 25	1	BZ340	M		O					
194-33720- 3		1	BZ340	M		O					
194-33725	200 - 22	1	AR 34	M		O					
194-33725- 3		1	AR 34	M		O					
194-33728	200 - 31	1	BZ 10	M		O					
194-33728- 3		1	BZ 10	M		O					
194-33728- 5		1	BZ 10	M		O					
194-33728- 7		1	BZ 10	M		O					
194-33728- 9		1	BZ 10	M		O					
194-33729	200 - 32	1	CM 25	M		O					
194-33729- 5		1	CM 25	M		O					
194-33729- 7		1	CM 25	M		O					
194-33730	200 - 18	1	AS236	M		O					
194-33730- 3		1	AS236	M		O					
194-33732	200 - 24	1	AS260	M		O					
194-33732- 23		1	AS260	M		O					
194-33734		1		M		O					
194-33734- 3		1		M		O					
194-33734- 5		1		M		O					
194-33735		1	AW464								
194-33744	200 - 36	1	CJ 33	M		O					
194-33744- 3		1	CJ 33	M		O					
194-33745	200 - 19	1	CM 26	M		O					
194-33745- 3		1	CM 26	M		O					
194-33745- 5		1	CM 26	M		O					
194-33747	200 - 20 201	1	CX 43	A		O					
194-33747- 3	201 - 5	1	CX 43	M		O					
194-33747- 5	201 - 8	1	CX 43	M		O					
194-33747- 11	201 - 15	1	CX 43	M		O					
194-33747- 21	201	1	CX 43	A		O					
194-33747- 31	201	1	CX 43	M		O					
194-33748	201 - 9	1	AS259	P1	F	O	S		R	1560-612-7228	ANAA
194-33754	200 - 9	1	BZ336	M		O					
194-33755	200 - 7	1	AW 3	M		O					
194-33756	200 - 23	1	DL260	M		O					
194-33756- 3		1	DL260	M		O					
194-34351	33 - 1	1	BE282	P1	F	O	R		R	1560-098-1488	ANAA
194-34351- 3		1	BE282	X1							
194-34351- 5		1	BE282	X1							
194-34351- 7		1	BE282	M		O					
194-34351- 9		1	BE282	M		O					
194-34351- 11		1	BE282	M		O					
194-34351- 12		1	BE282	M		O					
194-34351- 13		1	BE282	M		O					
194-34351- 15		1	BE282	M		O					
194-34351- 17		1	BE282	M		O					
194-34351- 19		1	BE282	X1							
194-34351- 21		1	BE282	M		O					
194-34351- 23		1	BE282	M		O					
194-34351- 25		1	BE282	M		O					
194-34351- 27		1	BE282	M		O					
194-34351- 29		1	BE282								
194-34351- 31		1	BE282	M		O					
194-34351- 33		1	BE282								
194-34351- 35	33	4	BE282	M		O					
194-34351- 37		4	BE282	M		O					
194-34351- 39		1	BE282	M		O					
194-34351- 41		1	BE282	M		O					
194-34351- 43	33	4	BE282	M		O					
194-34351- 44		1	BE282	M		O					
194-34351- 45	33 - 2	1	BE282	M		O					
194-34353	33 - 3	1	CJ 35	M		O					
194-34354	33 - 9	1	CM 31	P1	F	O	C		R	1560-048-1654	ANAA
194-34526	65 - 27	1	AW 52	P	F	O	S		R	1560-315-5776	ANAA
194-34533	200 - 33	1	CF169	P	F	O	C		R	1560-550-8030	ANAA
194-34566	64 - 66 200 - 2 200 - 27	1		P	F	O	C		R	1560-550-8029	ANAA
194-34590- 1		1	AW289	M		O					
194-34590- 2		1	AW289	M		O					
194-34590- 3		2	AW289	M		O					
194-34590- 5		2	AW289	M		O					
194-34590- 7		1	AW289	M		O					
194-40017	356 - 7	1	CJ 37	P1	F	O	S		R	1560-373-6823	ANAA
194-40017- 3		1	CJ 37	M		O					
194-40017- 5		1	CJ 37	M		O					
194-40027		1	CX 39	U							
194-40904		1	DP297								
194-42001		1	DH265								
194-42003		1	CW148								
194-42003- 3		1	CW148	X1							
194-42003- 5		1	CW148	X1							
194-42003- 7		2	CW148								
194-42003- 9		1	CW148	M		O					
194-42003- 21	PG. 1015	1	CW148	X1							
194-42004	355 - 9 PG. 1017	1	CX 35	X1					R	1560-373-6825	ANAA
194-42004- 3		1	CX 35	X1							
194-42004- 5		1	CX 35	X1							
194-42005	355 - 27 PG. 1015 PG. 1017 PG. 1023 PG. 1025	4	AS138								
194-42007- 1	355 - 7 355 - 10 PG. 1017	1	AS317	P	F	O	C		R	1500-C00-2222	ANAA
194-42007- 2	355 - 8 355 - 11 PG. 1017 PG. 1018	1	AS317	P	F	O	C		R	1560-031-4789	ANAA
194-42008	PG. 1015 PG. 1023	1	AS139	P1	F	O	S		R	1560-373-6827	ANAA
194-42008- 3	PG. 1015	1	AS139	X1							
194-42008- 21	355 - 28 PG. 1015 PG. 1023	1	AS139	P1	F	O	S		R	1560-319-5778	ANAA
194-42009	355 - 18 PG. 1015 PG. 1023	2I	CF171	P	F	O	C		R	1560-373-6828	ANAA
194-42011	PG. 1015	1	CM 32	U							
194-42012	355 -105 PG. 1015 PG. 1023	1	CF172	M		P					
194-42015	355 - 82 PG. 1015 PG. 1023	1	CX 1	P1	F	O	X		R	1560-373-6829	ANAA
194-42015- 3	355 PG. 1015	1	CX 1	X1							
194-42015- 5	355 PG. 1015	1	CX 1	X1							
194-42015- 7		1	CX 1	X1							
194-42015- 8		1	CX 1	X1							
194-42015- 9		1	CX 1	X1							
194-42015- 11		1	CX 1	X1							
194-42015- 13		1	CX 1	X1							
194-42015- 15		1	CX 1	X1							
194-42015- 17	355 - 87	4	CX 1	X1							
194-42015- 19		1	CX 1	X1							
194-42015- 21		1	CX 1	X1							
194-42015- 23		1	CX 1	X1							
194-42016	355 - 83 PG. 1015 PG. 1023	1	BW 60	P	F	O	C		R	1560-570-2215	ANAA
194-42016- 3		1	BW 60	M		O					
194-42016- 5		1	BW 60	M		O					
194-42017	355 PG. 1015 PG. 1023	1	BZ141	X1							
194-42018	355 -167 PG. 1016 PG. 1024	1							R	1560-373-6830	ANAA
194-42018- 17		1		X1							
194-42018- 19		1		X1							
194-42018- 21		4		M		O					
194-42018- 23		1		X1							

PART NUMBER	FIGURE AND INDEX	TOTAL QTY.	MICRO-FILM NUMBER	MAINTENANCE CODE DATA: SOURCE CODE	INSTL CAPABILITY	PRE-INSTL CAPABILITY	RECOVERABILITY	SUPPORT EQUIPMENT	COGNIZANCE CODE	FEDERAL STOCK NUMBER DATA: FEDERAL STOCK NUMBER	MFG. CODE (TSMC)
194-42018- 25		1		X1							
194-42018- 27		1		M		O					
194-42019		4	BZ140	M		O					
194-42020	355 - 92	4	CJ 38	M		O					
	PG. 1015										
	PG. 1023										
194-42021	355 - 90	4	CJ 39	P	F	O	C		R	1560-544-8431	ANAA
	PG. 1015										
	PG. 1023										
194-42022	PG. 1015	1	BX 99	M		O					
	PG. 1023										
194-42023	204 - 60	1	CF173	P	F	O	S		R	5300-C00-0261	G190
	PG. 1015										
	PG. 1023										
194-42025- 3	355 -180	1	AV 22	P1	F	O	S		R	1560-345-6636	ANAA
	PG. 1015										
	PG. 1023										
194-42025- 5	355 -176	1	AV 22	P1					R	1560-345-6637	ANAA
	PG. 1015										
	PG. 1023										
194-42026	355 -175	1	AX246	P1	F	O	S		R	1560-373-6832	ANAA
	PG. 1015										
	PG. 1023										
194-42027 1		1	BQ101	P	F	O	S		R	1560-512-8096	ANAA
194-42027- 1	355	1							R	1560-512-8096	ANAA
	PG. 1015										
	PG. 1023										
194-42027- 2	355 -173	1	BQ101	P	F	O	S		R	1560-512-8092	ANAA
	PG. 1015										
	PG. 1023										
194-42027- 5		1	BQ101								
194-42028	PG. 1015	1		M		O					
	PG. 1023										
194-42029- 3		1	BZ 55	X1							
194-42029- 5	355 -155	1	BZ 55	X1					R	1560-345-6638	ANAA
	PG. 1015										
	PG. 1023										
194-42030		1	CJ 41								
194-42030- 11	355	1	CJ 41	P1	F	O	S		P	1560-323-4139	ANAA
	PG. 1015										
	PG. 1023										
194-42031	PG. 1015										
	PG. 1023										
	351 - 2	2		P	F	O	S		R	1560-373-6835	ANAA
194-42032	PG. 1015	2	CF135	X1							
	PG. 1017										
	PG. 1023										
194-42033- 3	PG. 1015	2	BZ139	X1							
	PG. 1017										
	PG. 1023										
194-42034- 3	PG. 1015										
	PG. 1023										
	351 - 6	4		P	F	O	S		R	1560-373-6837	ANAA
194-42036	355 -118	3		M		O					
	PG. 1015										
	PG. 1023										
194-42041	PG. 1015										
	PG. 1023										
	351 - 1	4		P	F	O	C		R	1560-373-6841	ANAA
194-42043	355 -106	1		P	F	O	C		R	1560-373-6843	ANAA
	PG. 1015										
	PG. 1023										
194-42048	351 - 3	1	CX106	P	F	O	S		R	1560-373-6847	ANAA
	355 -159										
	PG. 1015										
	PG. 1023										
194-42048- 5		1	CX106	M		O					
194-42048- 11		2	CX106	M		O					
194-42048- 13		1	CX106	M		O					
194-42048- 14		1	CX106	M		O					
194-42053		1	CX110								
194-42053- 3	355 -181	1	CX110						R	1560-031-4791	ANAA
	PG. 1015										
	PG. 1023										
194-42053- 4	355 -174	1	CX110						R	1560-031-4794	ANAA
	PG. 1015										
	PG. 1024										
194-42053- 5		2	CX110	M		O					
194-42053- 7		6	CX110	M		O					
194-42053- 9		2	CX110	M		O					
194-42053- 11		2	CX110	M		O					
194-42053- 13		1	CX110	M		O					
194-42053- 14		1	CX110	M		O					
194-42053- 15		1	CX110	M		O					
194-42053- 16		1	CX110	M		O					
194-42053- 17		1	CX110								
194-42053- 31	355 -184	1	CX110	P	F	O	C		R	1560-031-4792	ANAA
	PG. 1015										
	PG. 1023										
194-42053- 32		1	CX110								
194-42053- 33	355 -183	1	CX110	P	F	O	S		R	1560-031-5169	ANAA
	PG. 1015										
	PG. 1024										
194-42053- 34	355 -182	1	CX110	P	F	O	S		R	1560-031-4793	ANAA
	PG. 1015										
	PG. 1024										
194-42053- 36	355 -185	1	CX110	P	F	O	S		R	1560-343-9118	ANAA
	PG. 1015										
	PG. 1024										
194-42054	355 -186	4		M		O					
	PG. 1015										
	PG. 1024										
194-42057	356 - 1	1	DN203	M		O					
194-42057- 3		1	DN203	M		O					
194-42058		1	BB141	M		O					

PART NUMBER	FIGURE AND INDEX	TOTAL QTY.	MICRO-FILM NUMBER	MAINTENANCE CODE DATA: SOURCE CODE	INSTL CAPABILITY	PRE-INSTL CAPABILITY	RECOVERABILITY	SUPPORT EQUIPMENT	COGNIZANCE CODE	FEDERAL STOCK NUMBER DATA: FEDERAL STOCK NUMBER	MFG. CODE (TSMC)
194-42059		1	BZ334								
194-42060	PG. 1015	1		M		O					
	PG. 1024										
194-42061	PG. 1015	1	BU211	M		O					
	PG. 1024										
194-42061- 3	PG. 1015	1	BU211	M		O					
194-42062	355 -165	1		M		O					
	PG. 1015										
	PG. 1024										
194-42064	355 -166	3	DM 47	M		O					
	PG. 1016										
	PG. 1024										
194-42065		1	BQ 51	M		O					
194-42066		1	BQ 53	M		O					
194-42067	355	4	CN 97	M		O					
	PG. 1016										
	PG. 1024										
194-42067- 21		1	CN 97								
194-42068		8	BQ 73	M		O					
194-42069	355 -167	1	BQ121	P1	F	O	S		R	1560-338-0994	ANAA
	PG. 1016										
	PG. 1024										
194-42069- 3		1	BQ121	X1							
194-42069- 5		1	BQ121	M		O					
194-42069- 7		2	BQ121	X1							
194-42069- 9		2	BQ121	X1							
194-42069- 11		1	BQ121	X1							
194-42069- 21	355	1	BQ121	M		O					
	PG. 1016										
194-43706		1	DQ177								
194-43707	204 - 54	1	CF177	P	F	O	S		R	1560-031-4795	ANAA
194-43717- 12	204	1	DG113	M		O					
	PG. 1016										
	PG. 1024										
194-43717- 13	204 - 62	1	DG113	M		O					
	PG. 1016										
	PG. 1024										
194-43717-101	204 - 61		DG113	P	F	O	S		R	1560-031-4796	ANAA
	355 - 75										
	PG. 1016										
	PG. 1024										
194-43720	204 - 56	1	CJ 48	M		O			R	1560-031-4797	ANAA
194-43726		1	BF419								
194-43726- 11		1	BF419								
194-43726- 13		1	BF419								
194-43726- 15	204 - 44	1	BF419	M		O					
194-43726-101	204	1	BF419	M		O					
194-47006	355	6	CJ 50	M		O					
	356										
194-47010	355	1	AT112	U							
	PG. 1016										
194-47016	355 -201	1		P	F	O	C		R	1560-373-6857	ANAA
	PG. 1016										
	PG. 1024										
194-47024	355 -192	1	DP121	A		F					
	PG. 1016										
194-47025	355	1	DP122	M		O					
	PG. 1016										
	PG. 1024										
194-47026	355 -191	1	DP123								
	PG. 1016										
	PG. 1024										
194-47027	355 -189	1	DP 62	P	F	O	C		R	1560-570-2216	ANAA
	PG. 1016										
	PG. 1024										
194-47027- 3		1		M		O					
194-47027- 5		1		M		O					
194-47028	355 -197	1	DP124	P3	F	O	C		R	5330-202-4522	ANAA
	PG. 1016										
	PG. 1024										
194-47029	355 -193	1	DP 31	P	F	O	S		R	1560-338-0995	ANAA
	PG. 1016										
	PG. 1024										
194-47029- 3		1	DP 31	M		O					
194-47029- 5		1	DP 31	M		O					
194-47029- 7		1	DP 31	M		O					
194-47029- 11		1	DP 31	M		O					
194-47029- 13	355	1	DP 31	M		O					
194-47029- 15		1	DP 31	M		O					
194-47029- 17		1	DP 31	M		O					
194-47029- 19		1	DP 31	M		O					
194-47029- 21		1	DP 31	M		O					
194-47029- 23		1	DP 31	M		O					
194-47030	355	1	DP 63	A		F					
	PG. 1016										
	PG. 1024										
194-47030- 11		1	DP 63								
194-47031	355 -200	1	CF183	M		O					
	PG. 1016										
	PG. 1024										
194-47036	355 -211	1	DQ163	M		O					
	PG. 1018										
	PG. 1024										
194-47037	355	1	DP125	A		F			R	1560-560-2272	ANAA
	PG. 1018										
	PG. 1024										
194-47038	355	1	DR 33	P1	F	O	S		R	1560-510-1125	ANAA
	PG. 1018										
	PG. 1024										
194-47038- 3		1	DR 33	M		O					
194-47038- 5		1	DR 33	M		O					
194-47038- 7	355 -218	1	DR 33	M		F					
194-47038- 9	355 -217	1	DR 33	M		F					
194-47038- 11	355 -221	1	DR 33	M		O					
194-47038- 13		1	DR 33	M		O					

PART NUMBER	FIGURE AND INDEX	TOTAL QTY.	MICRO-FILM NUMBER	MAINTENANCE CODE DATA: SOURCE CODE	INST'L CAPABILITY	PR-INT'L CAPABILITY	RECOVERABILITY	SUPPORT EQUIPMENT	FEDERAL STOCK NUMBER DATA: CONTRACT CODE	FEDERAL STOCK NUMBER	MFG. CODE (TSMC)
194-47038- 15		1	DR 33	M		O					
194-47038- 17		1	DR 33	M		O					
194-47038- 19		1	DR 33	M		O					
194-47039	355 -223	1	DP154	P3	F	O	C		R	1560-564-6452	ANAA
	PG. 1018										
	PG. 1024										
194-47040	355 -216	1	DP126	M		F			R	1560-640-8964	ANAA
	PG. 1018										
	PG. 1024										
194-47040- 3	PG. 1018	1	DP126	M		O					
	PG. 1024										
194-47042	355 -214	1	DP 64	P1	F	O	S		R	1560-510-1126	ANAA
	PG. 1018										
	PG. 1024										
194-47043	355	1	DP 65	A		F					
	PG. 1018										
	PG. 1024										
194-47046	355 -224	1	DP 66	M		O					
	PG. 1018										
	PG. 1024										
194-47046- 3	355	1	DP 66	M		O					
	PG. 1018										
	PG. 1024										
194-47046- 5	355	1	DP 66	M		O					
	PG. 1018										
	PG. 1024										
194-47047	355 -213	1	DP155	M		O					
	PG. 1018										
	PG. 1024										
194-47424	355 -190	1	DP127	P					R	1560-663-1991	ANAA
	355 -206										
	PG. 1018										
	PG. 1018										
	PG. 1024										
194-48080	111 - 1	1									
194-481108		1		M		O					
194-481108- 3		1		M		O					
194-48147		1	DL 89								
194-48148		1	DL 90								
194-48149		1	DQ264								
194-48149- 22		1	DQ264						R	1560-560-6352	ANAA
194-48155		1	DN 19								
194-48203		1	DG121								
194-48204	121	1	CM 43	M		O					
194-48204- 3	121 - 34	1	CM 43	M		O					
194-48205	121 - 35	1	CJ 66	M		O					
194-48206	121 - 12	1	CF193	M		O					
194-48207- 3	121	1	CM 44								
194-48207- 11	121 - 19	1	CM 44						R	1560-574-2073	ANAA
194-48209	121 - 25	1	BG110	M		O					
194-48209- 3		1	BG110	M		O					
194-48218	121	3	BQ 38								
194-48219	121 - 39	1	BQ221	X2							
194-48221	121 - 24	1	BQ 84	P	F	O	S		R	1560-512-8100	ANAA
194-48223	121 - 26	1	CF194	M		O					
194-48224		1	DJ241								
194-48227	121 - 18	1	AZ 71	P1	F	O	S		R	1560-510-1127	ANAA
194-48227- 3	121	1	AZ 71	X1							
194-48227- 5	121	1	AZ 71	M		O					
194-48227- 7	121	1	AZ 71	M		O					
194-48410		1		M		O					
194-48410- 3		1		M		O					
194-48723		1	DG104								
194-48732	334 -207	1									
194-48762		1	DH193								
194-48801- 33		1									
194-488101		1	DN202								
194-488103		1	DH222								
194-48814		1	DS 58								
194-48843	100 -132	1	DH 71								
	101 - 97										
	102 - 75										
	103 - 93										
194-48849- 3	101 - 97	1	CU217	M		O					
	102 - 75										
194-48843- 5		2	CU217								
194-48851	100 -135	1	CU214	P	F	O	C		R	1560-570-2217	ANAA
	101 -100										
	102 - 72										
	103 - 96										
194-48861		1	DG 96								
194-48899- 21		1									
194-51001		1									
194-51005		1	DH184								
194-51011	219	1	BT113	M		O					
194-51011- 21	219	1									
194-51014	274 - 13	2	CJ 72	M		O					
194-51018		4	BZ319	M		O					
194-51019		1	CV 4	M		O					
194-51027		1	CA 24								
194-51027- 5		1	CA 24								
194-51027- 7		1	CA 24	M		O					
194-51027- 11	223 - 25	1	CA 24	M		O					
194-51029		1	DR 82								
194-51035		1	DG223								
194-51036		1	DG224								
194-51037		1	DR170								
194-51038		1	DR164								
194-51043		1	DR167								
194-51074	219 - 3	1	BT112	M		O					
194-51087	240 - 17	1	CV 33	M		O					
194-51088	240 - 5	1	BU244	M		O					
194-51088- 11	240	1	BU244	M		O					
194-51109	273 - 5	1	AS246	M		O					
	355										

PART NUMBER	FIGURE AND INDEX	TOTAL QTY.	MICRO-FILM NUMBER	MAINTENANCE CODE DATA: SOURCE CODE	INST'L CAPABILITY	PR-INT'L CAPABILITY	RECOVERABILITY	SUPPORT EQUIPMENT	FEDERAL STOCK NUMBER DATA: CONTRACT CODE	FEDERAL STOCK NUMBER	MFG. CODE (TSMC)
	PG. 1025										
194-51109- 3		1	AS246	M		O					
194-51110	355	1	CF200	M		O					
	PG. 1016										
	PG. 1025										
194-51111	273	1	AW236	P					R	1560-348-1104	ANAA
	273 - 5										
	355										
	PG. 1016										
	PG. 1025										
194-51115	273 - 9	1		M		O					
	355										
	PG. 1016										
	PG. 1025										
194-51115- 3	355	1		M		O					
	PG. 1016										
194-51116	273 - 8	1		M		O					
	355										
	PG. 1016										
	PG. 1025										
194-51120	219 - 9	2	DG181	M		O					
194-51127	296 - 6	1	AR 22	M		O					
	305 - 25										
	306 - 29										
194-51142	355	1	DG 96	U							
	PG. 1016										
	PG. 1024										
194-51144	276 - 17	1	DK 75	M		O					
194-51153		1	DN 27								
194-51804	223 - 13	1		M		O					
194-51804- 3		1		M		O					
194-51804- 5		1		M		O					
194-51804- 7		1		M		O					
194-52012	193 - 8	1	BZ318	M		O					
194-52013	193 - 12	1	BR115	M		O					
194-52014		2	AR 95	M		O					
194-52015		2	BZ128								
194-52015- 1		1	BZ128	M		O					
194-52015- 2		1	BZ128	M		O					
194-52016	193 - 24	1	BZ 45	P1	F	O	S		R	1560-330-6148	ANAA
194-52017	193 - 14	1	CJ297	P	F	O	C		R	1560-330-6149	ANAA
194-52018	193 - 19	1									
		1	BZ317	P1					R	1560-330-6150	ANAA
194-52019	193 - 17	1	BZ316	M		O					
194-52020	193	1	AR139	M		O					
194-52020- 3		1	AR139	M		O					
194-52020- 11	193 - 25	1	AR139	M		O					
194-52021	193 - 3	1	DH249	P1	F	O	S		R	1560-305-4117	ANAA
194-52022	193 - 10	1	BZ315	M		O					
194-52023	193 - 2	1	CX 18	P1	F	O	S		R	1560-305-4118	ANAA
194-52024	193 - 9	1	CF204	M		O					
194-52025	193 - 1	1	DH223	P1					R	1560-346-1105	ANAA
194-52025- 11	193	1	DH223	A		F					
194-52031		1	CF206	M		O					
194-52034- 3	196 - 53	1	BS172	X2							
194-52039	193 - 49	1	BR129	P1	F	O	S		R	1560-333-7859	ANAA
194-52053		1									
194-52061		1	BZ313	M		O					
194-52062		1	BZ312	M		O					
194-52078	181 - 40	1	CF210	M		F					
	184 -146	1									
	185 -106										
194-52079- 3	181 - 43	1	CF211	M		F					
	184 -147	1									
	185 -107										
194-52079- 5	181 - 39	1	CF211	M		F					
	184 -145	1									
	185 -105										
194-523101	180	1	AR 96	A		F					
	180	1									
194-523102	180 - 17	1	BZ126	P1	F	O	S		R	1560-511-1487	ANAA
194-52402	186 - 41	2	CJ 85	P	F	O	C		R	1560-544-8438	ANAA
194-52432		2	BR116	M		O					
194-52434	186 - 71	1	AP 1	P1					R	1560-332-6521	ANAA
194-52435- 3	186 - 73	1		M		O					
194-52436- 7		1		M		O					
194-52436- 9		1		M		O					
194-52436- 11	186 - 74	1		M		O					
194-52437		1	AS 4	M		O					
194-52442	186 - 77	1	AX 33	X2							
194-53110		1	DG 12	M		O					
194-53153	55 - 30	2	BV228	M		O					
	57 - 52										
	57A- 23										
194-53153- 3		2	BV228	M		O					
194-53153- 5		2	BV228	M		O					
194-53153- 6		2	BV228	M		O					
194-53155- 3		1	BV212	M		O					
194-53155- 4		1	BV212	M		O					
194-53156		1	BL279	M		O					
194-53157		1	AX112								
194-53158		1	CA106	M		O					
194-53161		1	DK199								
194-53161- 3		1	DK199								
194-53161- 5		1	DK199	M		O					
194-53161- 7		1	DK199	M		O					
194-53161- 9		1	DK199	M		O					
194-53161- 11		1	DK199	M		O					
194-53161- 13		1	DK199	M		O					
194-53161- 15		1	DK199	M		O					
194-53161- 17		1	DK199	M		O					
194-53161- 19		1	DK199	M		O					
194-53161-201		1	DK199								
194-53161-301		1	DK199	M		O					
	43	1									

PART NUMBER	FIGURE AND INDEX	TOTAL QTY.	MICRO-FILM NUMBER	MAINTENANCE CODE DATA: SOURCE CODE	INSTL CAPABILITY	PRE-INSTL CAPABILITY	RECOVERABILITY	SUPPORT EQUIPMENT	COGNIZANCE CODE	FEDERAL STOCK NUMBER DATA: FEDERAL STOCK NUMBER	MFG. CODE (TSMC)
194-53161-501		1	DK199	M		O					
	43	1									
194-53161-601		1	DK199	M		O					
	43	1									
194-53162- 3		1	DK184								
194-53162- 5		1	DK184	M		O					
194-53162- 7		1	DK184	M		O					
194-53162- 9		1	DK184	M		O					
194-53162- 11		1	DK184								
194-53162- 13		1	DK184	M		O					
194-53162- 15		1	DK184	M		O					
194-53162- 19		1	DK184	M		O					
194-53162-201		1	DK184	M		O					
	43 - 85	1									
194-53162-301	43	1									
194-53169		1	CG210								
194-53164		2	CG208	M		O					
194-53166		1	CF220	M		F					
194-53171		1	BZ122	M		O					
194-53172		1	BZ123								
194-53173		1	BZ124								
194-53174		1	CJ294	M		O					
194-53174- 3		1	CJ294	M		O					
194-53174- 5		1	CJ294	M		O					
194-53176		1	DK109								
194-53311	350 - 7	1	BT117	P	F	O	C		R	1560-510-4927	ANAA
194-53312	350 - 8	2	BU238	P	F	O	C		R	1560-508-2853	ANAA
194-53328- 5	351	2	CF221	M		F					
194-533358		1									
194-53340	350 - 1	1	CX 48	M		O					
	351 - 14										
194-53340- 3		1	CX 48	M		O					
194-53340- 5		1	CX 48	M		O					
194-53340- 7		1	CX 48	M		O					
194-53340- 9		1	CX 48	M		O					
194-53340- 11		1	CX 48	M		O					
194-53340- 13		2	CX 48	M		O					
194-53340- 15		1	CX 48	M		O					
194-53340- 21		1	CX 48	M		O					
194-53340- 23		2	CX 48	M		O					
194-53349- 1		1	CF222	M		O					
194-53349- 2		1	CF222	M		O					
194-53350	350 - 10	1	AV 28	P1	F	O	S		R	1560-697-3166	ANAA
194-53350- 3		1	AV 28	X1							
194-53350- 5		1	AV 28	X1							
194-53350- 7		1	AV 28	X1							
194-53350- 19		1	AV 28	X1							
194-53350- 31		1	AV 28	X1							
194-53350- 33		1	AV 28								
194-53350- 39		2	AV 28								
194-53350- 41		1	AV 28	X1							
194-53391	350 - 17	1	AS216	P1	F	O	S		R	1560-341-4640	ANAA
194-53351- 3		1	AS216	X1							
194-53352		1	CM 71	M		O					
194-53352- 3		1	CM 71	M		O					
194-53352- 5		1	CM 71	M		O					
194-53352- 7		1	CM 71	M		O					
194-53352- 9		1	CM 71	M		O					
194-53353	351 - 28	1									
194-53356	351 - 20	1	CX 88	M		O					
194-53356- 3		1	CX 88	M		O					
194-53356- 5		1	CX 88	M		O					
194-53356- 7		1	CX 88	M		O					
194-53356- 9		1	CX 88	M		O					
194-53357	351 - 25	1	CX 21	M		O					
194-53357- 3		1	CX 21	M		O					
194-53357- 5		1	CX 21	M		O					
194-53357- 7		1	CX 21	M		O					
194-53357- 9		1	CX 21	M		O					
194-53357- 11		1	CX 21	M		O					
194-53357- 21		1	CX 21	M		O					
194-53358	351 - 32	1	DK 76								
194-53358- 3		1	DK 76	M		O					
194-53358- 5		1	DK 76	M		O					
194-53358- 7		1	DK 76	M		O					
194-53358- 9		1	DK 76	M		O					
194-53359	351 - 35	1	AP 48	P1					R	1560-303-8569	ANAA
194-53359- 3		2	AP 48	M		O					
194-53359- 5		1	AP 48	M		O					
194-53359- 7		1	AP 48	M		O					
194-53359- 9		1	AP 48	M		O					
194-53361	351 - 30	1	CM 73	M		O					
194-53361- 3		1	CM 73	M		O					
194-53361- 4		1	CM 73	M		O					
194-53361- 5		1	CM 73	M		O					
194-53361- 6		1	CM 73	M		O					
194-53361- 7		1	CM 73	M		O					
194-53372		1	CF223	M		O					
194-53443	94 - 52	1	BX 32	M		O					
	223 - 1										
	350 - 61										
194-53443- 3		1	BX 32								
194-53443- 5		1	BX 32								
194-53443- 11		1	BX 32	M		O					
194-53443- 13		1	BX 32								
194-53443- 15		1	BX 32								
194-53443- 17		1	BX 32	M		O					
194-53443- 19		1	BX 32	M		O					
194-53443- 21		1	BX 32	M		O					
194-53443- 23		1	BX 32	M		O					
194-53443- 25		1	BX 32	M		O					
194-53443- 27		1	BX 32								
194-53443- 29		1	BX 32	M		O					
194-53473		1	CW131	A		F					
194-53473- 3		1	CW131	M		O					
194-53473- 5		1	CW131	M		O					
194-53473- 7		1	CW131	M		O					
194-53473- 9		1	CW131	M		O					
194-53473- 11		1	CW131	M		O					
194-53473- 13		2	CW131	M		O					
194-53473- 17		1	CW191	M		O					
194-53526	350 - 79	1	CJ 89	P3	F	O	C		R	4720-595-4815	ANAA
194-53550- 1	33 - 98	1	BW 32	P1	F	O	S		R	1560-373-6884	ANAA
	36										
194-53550- 2	33	1	BW 32	P1	F	O	S		R	1560-373-6885	ANAA
	36										
194-53550- 3		1	BW 32	M		O					
194-53550- 4		1	BW 32	M		O					
194-53550- 5		1	BW 32	M		O					
194-53550- 6		1	BW 32	M		O					
194-53550- 7		1	BW 32	M		O					
194-53550- 8		1	BW 32	M		O					
194-53550- 9		1	BW 32	M		O					
194-53550- 10		1	BW 32	M		O					
194-53550- 11		1	BW 32	M		O					
194-53550- 12		1	BW 32	M		O					
194-53550- 13		1	BW 32	M		O					
194-53550- 14		1	BW 32	M		O					
194-53550- 15		1	BW 32	M		O					
194-53550- 16		1	BW 32	M		O					
194-53550- 17		1	BW 32	M		O					
194-53550- 18		1	BW 32	M		O					
194-53550- 19		1	BW 32	M		O					
194-53550- 20		1	BW 32	M		O					
194-53550- 21		1	BW 32	M		O					
194-53550- 22		1	BW 32	M		O					
194-53550- 23		1	BW 32	M		O					
194-53550- 24		1	BW 32	M		O					
194-53550- 25		4	BW 32	M		O					
194-53550- 27		4	BW 32	M		O					
194-53550- 31		1	BW 32	X1							
194-53550- 32		1	BW 32	X1							
194-53550- 41		1	BW 32	X1							
194-53550- 42		1	BW 32	X1							
194-53550-101		1	BW 32								
194-53550-102		1	BW 32								
194-53554- 1	36 - 1	1	CX107	X1							
194-53554- 2	36	1	CX107	X1							
194-53601	350 - 78	1	CJ 90	M		O					
194-54003		1	DN 3								
194-54005		1	DN 2								
194-54013		1	DN220								
194-54028		1	CF224	M		O					
194-54028- 11	241 - 28	2	CF224	M		O					
194-54029- 11		1	BX105								
194-54029- 21	241 - 22	1	BX105	A		F					
194-54047		1							R	1500- -2235	ANAA
194-54048		1	BV229								
194-54054	305 - 21	2	CF227	P1	F	O	C		R	5355-667-9573	ANAA
	306 - 25										
194-54055		1	CE 99								
194-54055- 1	305 - 26	1	CE 99	M		O					
	306 - 30										
194-54055- 3		2	CE 99								
194-54055- 5		2	CE 99	M		O					
194-54056	296 - 7	1	CF228	X1							
194-54057	296 - 5	1	CF229	P1	F	O	C		R	5355-667-9709	ANAA
194-54059- 3	303 - 7	1	DP 67								
194-54059- 5	296 - 18	1	DP 67	M		F					
	303 - 5										
	308 - 11										
	310 - 2										
194-54059- 7		1	DP 67	M		F					
194-54059- 9		2	DP 67	M		F					
194-54059- 11	314 - 6	3	DP 67	M		F					
	314 - 7										
	319 - 3										
194-54059- 13	314 - 5	1	DP 67	M		F					
	319 - 5										
194-54059- 15	314 - 3	2	DP 67								
	319 - 2										
194-54059- 17	319	1									
		1	CV 40	M		F					
194-54059- 18	314 - 11	1	DP 67								
194-54059- 19	269A- 14	3									
	295 - 14										
	302 - 8										
	303 - 6										
	304 - 6										
	305 - 55										
	306 - 60										
	319 - 8										
194-54059- 21	300 - 45	11	DP 67	M		F					
	301 - 44										
	305 - 57										
	306 - 62										
	314 - 12										
	314 - 13										
	317 - 29										
	318 - 73										
194-54059- 25	314 - 10	1	DP 67	M		F					
	319 - 7										
194-54059- 27	314 - 8	3	DP 67	M		F					
	314 - 9										
	319 - 9										
194-54059- 29	314 - 14	1									
	319 - 4	1	DP 67								
194-54059- 43		1	DP 67								
194-54059- 61	304 - 3	1	DP 67								
194-54059- 63	304 - 4	2	DP 67								

PART NUMBER	FIGURE AND INDEX	TOTAL QTY.	MICRO-FILM NUMBER	MAINTENANCE CODE DATA: SOURCE CODE	INSTL CAPABILITY	PRE-INSTL CAPABILITY	RECOVERABILITY	SUPPORT EQUIPMENT	COGNIZANCE CODE	FEDERAL STOCK NUMBER DATA: FEDERAL STOCK NUMBER	MFG. CODE (TSMC)
194-54059- 65	304 - 5	1	DP 67								
194-54059- 69	319 - 6	1	DP 67	M		O					
194-54059- 70	269A	3									
194-54064	241 - 37	1		M		O					
194-54067	335	2	CJ 94	P	F	O	C		R	1560-338-0997	ANAA
	PG. 1016										
	PG. 1025										
194-54072		1									
194-54072- 3		1									
194-54094		1	DJ149								
194-54104		1	DR114								
194-54126- 3		1									
194-54127- 3		1									
194-54161		1	DJ188								
194-54169		1	DP293								
194-54174		1	DL114								
194-54175		1	DL 69								
194-54176		1	DL 92								
194-54177		1	DR 83								
194-54180		1	DR 84								
194-54182		1	DR 85								
194-54193	261	1	AY176	P1	F	O	S		R	1560-031-4803	ANAA
194-54193- 3		1	AY176	X1							
194-54193- 5		1	AY176	M		O					
194-54193- 7		2	AY176	M		O					
194-54193- 11		1	AY176	M		O					
194-54193- 13		1	AY176	X1							
194-54193- 21		1	AY176	M		O					
194-54193- 31	261 - 17	1	AY176	P1	F	O	S		R	1560-346-1107	ANAA
194-54195	301 - 45	1		P	F	O	C				
194-54195- 3		1		M		O					
194-54195- 5		4		M		O					
194-54195- 7		1		M		O					
194-54206		1	DN308								
194-54210		1	AS280								
194-54210- 3		1	AS280								
194-54210- 5		1	AS280	M		O					
194-54210- 11		1	AS280	M		O					
194-54216		1	CC139								
194-54216- 3		1	CC139	M		O					
194-54217		1	BR101								
194-54217- 3		1	BR101	M		O					
194-54222- 3		1	AZ 72	P1	O	O	C		R	1560-346-1108	ANAA
	43 - 88	1									
194-54222- 5		1	AZ 72	P1	O	O	C		R	1560-346-1109	ANAA
	43 - 89	1									
194-54222- 7		1	AZ 72	P1	O	O	C		R	1560-346-1110	ANAA
	43 - 86	1									
194-54222- 9		1	AZ 72	P1	O	O	C		R	1560-346-1111	ANAA
	43 - 87	1									
194-54236		1									
194-54238		1									
194-54241		1									
194-54242		1									
194-54329		1									
194-54338		1	DG225								
194-54339		1									
194-54810	259	1	CF233	M		O					
194-54852	225	1	BY 10	A		F					
194-54855	225 - 39	1	BX268	M		O					
194-54856	225 - 44	1		M		O					
194-54857	225 - 58	1	BX269	M		O					
194-54858	225 - 45	1		M		O					
194-56104- 22		1									
194-56107- 21		1	CW146	P1					R	1560-031-4804	ANAA
194-56109- 3		2	AV 44	X1							
194-56109- 22		1	AV 44	X1							
194-56109- 31		1	AV 44	X1							
194-56111- 3		1	CX131	X1							
194-56111- 4		1	CX131	X1							
194-56130		1	CJ 99	M		O					
194-56153		1	CM224	P1	F	O	C		R	1560-373-6892	ANAA
194-56153- 3		1	CM224	X1							
194-56153- 5		1	CM224	X1							
194-56153- 7		1		X1							
194-56153- 11		1	CM224	P1	F	O	C		R	1560-510-1129	ANAA
194-56161- 3	83	1	BV 17	X1							
194-56161- 11	83	1	BV172	P1	F	O	S		R	1568-522-8863	ANAA
									R	1560-522-8863	ANAA
										OR	
194-56311- 3		1	CW123	X1							
194-56311- 11	75 - 6	1	CW123	P1	F	O	S		R	1560-338-0998	ANAA
194-56311-102		1	CW123								
194-56315- 3		2	AZ 11	X1							
194-56315- 11	75 - 38	2	AZ 11	P1	F	O	C		R	1560-338-0999	ANAA
194-56316- 3		1	BR151	X1							
194-56316- 11	75 - 26	2	BR151	P1	F	O	S		R	1560-343-9119	ANAA
194-56397	203 - 15	1	AW 53	M		O					
194-56722	203 - 31	1	AZ138	M		F					
194-56723	203 - 30	1	AZ139	M		F					
194-56730	203 - 90	1	AX141	M		O					
194-56730- 3		1	AX141	M		O					
194-56730- 5		1	AX141	M		O					
194-56730- 7		1	AX141	M		O					
194-56730- 9		1	AX141	M		O					
194-56746	203 - 60	1	AS220	M		O					
194-56746- 5		1	AS220	M		O					
194-56757	203 - 25	1	AY170	P1	F	O	S		R	1560-697-3168	ANAA
194-56762		2	AZ142	M		O					
194-56798		1	BZ 38								
194-58076		1	DD 93								
194-58198		1	CJ106	M		O					
194-58199		1	DG310	M		O					
194-58199- 3		1	DG310	M		O					
194-58200	139 - 4	1									

PART NUMBER	FIGURE AND INDEX	TOTAL QTY.	MICRO-FILM NUMBER	MAINTENANCE CODE DATA: SOURCE CODE	INSTL CAPABILITY	PRE-INSTL CAPABILITY	RECOVERABILITY	SUPPORT EQUIPMENT	COGNIZANCE CODE	FEDERAL STOCK NUMBER DATA: FEDERAL STOCK NUMBER	MFG. CODE (TSMC)
194-58288		1	DM 2								
194-58315	124 - 89	3	AX104	P1	F	O	S		R	1650-373-7961	ANAA
	126										
	127										
194-58333		1	BZ110	M		O					
194-58333- 3		1	BZ110	M		O					
194-58333- 5		2	BZ110	M		O					
194-58333- 7		1	BZ110	M		O					
194-58333- 9		1	BZ110	M		O					
194-58338		1	CJ118	M		O					
194-58338- 3		1	CJ118	M		O					
194-58338- 5		1	CJ118	M		O					
194-58338- 7		2	CJ118	M		O					
194-58338- 9		1	CJ118	M		O					
194-58378	199 - 5	1	BV254	M		O					
194-58378- 3		1	BV254	M		O					
194-58378- 5		1	BV254	M		O					
194-58379	199 - 6	1	CF247	M		O					
194-58442-101	197 - 75	1	AR 97	P1	F	O	S		R	1560-323-4143	ANAA
194-58452		1	CJ130	M		O					
194-58454	143 - 66	1	DG112	A		F					
	144 - 24										
194-58455		1	CM 96	M		O					
194-58508		1	AX241	M		O					
194-58508- 3		1	AX241	M		O					
194-58508- 5		1	AX241	M		O					
194-58508- 7		1	AX241	M		O					
194-58508- 9		1	AX241	M		O					
194-58508- 11		1	AX241	M		O					
194-58605	170	1	AR111	A		F					
194-58608	135 - 93	1	BJ 34	A		F					
	150										
194-58630	141 -106	1	AU 6								
194-58630- 11	149	1	AU 6	A		F					
194-58635	144 - 27	1	BZ 55	A		F					
194-58639	64 - 61	1	BV251	A		F					
	144										
194-58644	143	1	AW491	A		F					
194-58645	142 - 52	1	CJ135	A		F					
194-58649- 11		1	BJ 48								
194-58651		1	CY 42								
194-58651- 11	135 - 50	1	CY 42	A		F					
	140										
194-58651- 21	134 - 84	1	CY 42	A		F					
	140										
194-58652- 1	163 - 44	1	DH272	P1			F		R	1650-373-7962	ANAA
194-58652- 2	163 - 43	1	DH272	P1			F		R	1650-373-7963	ANAA
194-58655	135 -108	1	CJ298	A		F					
194-58655- 11	134 -114	2	CJ298	A		F					
	136 -134										
194-58658	134	1	CJ136	A		F					
	135 - 60										
194-58659- 11	134	1	AS129	A		F					
	135										
194-58660- 11	134 - 94	1	AR 83	A		F					
	135 - 69										
	163										
194-58667- 1		1	BX 70								
194-58667- 2		1	BX 70	A		F					
194-58667- 21		1	BX 70								
194-58667- 22		1	BX 70	A		F					
194-58686	150 - 24	1	BM 19	A		F					
	152										
194-58690	135	1	BV249	A		F					
194-58699	150 - 18	1	AU133								
	152										
194-58805- 5		1	DG101								
194-58805- 7	135 -116	1	DG101	M		F					
194-58805- 47	134 -125	1	DG101	M		F					
	135 -115										
194-58805- 49	150 - 19	1	DG101	M		F					
194-58805- 51	152 - 36	1	DG101	M		F					
194-58805- 53		1	DG101								
194-58805- 57		1	DG101								
194-58805- 59		1	DG101								
194-58805- 63		1	DG101								
194-58805- 65		1	DG101								
194-58805- 71		1	DG101								
194-58805- 73		1	DG101								
194-58805- 89	150 - 17	1	DG101	M		F					
194-58805- 91		1	DG101								
194-58805- 95	150 - 20	1	DG101	M		F					
194-58805-105		1	DG101								
194-58805-107		1	DG101	M		F					
194-58805-147		1	DG101	M		F					
194-58805-149		1	DG101	M		F					
194-58805-151		1	DG101	M		F					
194-58805-153		1	DG101								
194-58805-157		1	DG101								
194-58805-159		1	DG101								
194-58805-163		1	DG101								
194-58805-165		1	DG101								
194-58805-171		1	DG101								
194-58805-173		1	DG101								
194-58805-189		1	DG101	M		F					
194-58805-191		1	DG101								
194-58805-195		1	DG101	M		F					
194-58806- 31		1	BE339								
194-58806- 33	163 - 41	1	DK 78	M		F					
194-58806- 35		1	DK 78								
194-58806- 37		1	DK 78								
194-58806- 89	170 - 6	1	DK 78	M		F					
194-58806- 91	170 - 8	1	DK 78	M		F					
194-58806- 93	170 - 10	1	DK 78	M		F					
194-58806-131		1	DK 78								

PART NUMBER	FIGURE AND INDEX	TOTAL QTY.	MICRO-FILM NUMBER	MAINTENANCE CODE DATA: SOURCE CODE	INSTL CAPABILITY	PRE-INSTL CAPABILITY	RECOVERABILITY	SUPPORT EQUIPMENT	COGNIZANCE CODE	FEDERAL STOCK NUMBER DATA: FEDERAL STOCK NUMBER	MFG. CODE (TSMC)
194-58806-133		1	DK 78	M		F					
194-58806-135		1	DK 78								
194-58806-137		1	DK 78								
194-58806-189		1	DK 78	M		F					
194-58806-191		1	DK 78	M		F					
194-58806-193		1	DK 78	M		F					
194-58807- 15		1	DR356								
194-58807- 17		1	DR356								
194-58807- 19		1	DR356								
194-58807- 27		1	DR356								
194-58807- 29	135 - 49	1	DR356	M		F					
194-58807- 35		1	DR356								
194-58807- 37	135 - 62	1	DR356	M		F					
194-58807- 39		1	DR356	M		F					
194-58807-113		1	DR356								
194-58807-115		1	DR356								
194-58807-117		1	DR356								
194-58807-119		1	DR356								
194-58807-127		1	DR356								
194-58807-129		1	DR356	M		F					
194-58807-13		1	DR356								
194-58807-133		1	DR356								
194-58807-137		1	DR356	M		F					
194-58807-139		1	DR356	M		F					
194-58812		1	DQ 71								
194-58815- 67		1		M		F					
194-58815- 71		1									
194-58815- 73		1									
194-58816- 5	141 - 97	1	CM253	M		F					
194-58816- 7		1	CM253								
194-58816- 9	150 - 38	1	CM253	M		F					
194-58816- 13	135 -112	1	CM253	M		F					
194-58816- 19	142 - 51	1	CM253	M		F					
194-58816- 21	141 - 95	1	CM253	M		F					
194-58816- 23	142 - 48	1	CM253	M		F					
194-58816- 25	141 - 88	1	CM253	M		F					
194-58816- 29	149 - 3	1	CM253	M		F					
194-58816- 37		1	CM253								
194-58816-105		1	CM253	M		F					
194-58816-107		1	CM253								
194-58816-109		1	CM253	M		F					
194-58816-113		1	CM253	M		F					
194-58816-119		1	CM253	M		F					
194-58816-121		1	CM253	M		F					
194-58816-123		1	CM253	M		F					
194-58816-125		1	CM253	M		F					
194-58816-129		1	CM253	M		F					
194-58816-137		1	CM253								
194-58836- 3	144 - 23	1	CP 79	M		F					
194-58836- 9	144 - 33	1	CP 79	M		F					
194-58836- 13	143 - 65	1	CP 79	M		F					
194-58836- 15	143 - 63	1	CP 79	M		F					
194-58836- 17	143 - 69	1	CP 79	M		F					
194-58836- 59	150 - 25	1	CP 79								
	152 - 22										
194-58836-103		1	CP 79	M		F					
194-58836-109		1	CP 79	M		F					
194-58836-113		1	CP 79	M		F					
194-58836-115		1	CP 79	M		F					
194-58836-117		1	CP 79	M		F					
194-58836-159		1	CP 79								
194-59081- 3		1									
194-59180- 19	323 - 1	1									
194-59206- 1		1	CE 53	M		O					
194-59206- 2		1	CE 53	M		O					
194-59206- 3		1	CE 53	M		O					
194-59206- 4		1	CE 53	M		O					
194-59208		1	AZ103	M		O					
194-59209- 3	39 - 69	1	AZ104	M		O					
194-59209- 5	39 - 67	1	AZ104	M		O					
194-59209- 7	39 - 68	2	AZ104	M		O					
194-59210- 3		2	BA 33	M		O					
194-59211	321 - 81	1	CF251	M		O					
194-59601	322 - 29	1	CM247	A		F					
	324										
194-59602	322 - 81	1	CM203	A		F					
	325										
194-59603	323	1	BY128								
194-59603- 11		1	BY128	A		F					
194-59604	322	1	CJ326	A		F					
194-59605	322 - 87	1	BA134	A		F					
	326										
194-59610- 3	322 - 31	1	CE 50	A		F					
194-59610- 5	322	1	CE 50	A		F					
194-59613	322 - 49	2	AZ105	A		F					
194-59615- 11	323	1	CM114	A		F					
194-59616	323	1	CM227	A		F					
194-59618		2	CM214	A		F					
194-59618- 21	322 - 27	2	CM214	A		F					
	322 - 72										
194-59655- 11	135 - 85	1									
194-59801- 3		1	AZ 77	M		F					
194-59801- 5	320 - 50	1	DG311	M		F					
	323 - 4										
194-59801- 7	320 - 52	1	DG311	M		F					
	323 - 6										
194-59801- 9	320 - 54	1	DG311	M		F					
	321 - 8	1									
	323 - 8										
194-59801- 11	323 - 21	1	DG311	M		F					
194-59801-103		1	DG311	M		F					
194-59801-105		1	DG311	M		F					
194-59801-107		1	DG311	M		F					
194-59801-109		1	DG311	M		F					
194-59801-111		1	DG311	M		F					

PART NUMBER	FIGURE AND INDEX	TOTAL QTY.	MICRO-FILM NUMBER	MAINTENANCE CODE DATA: SOURCE CODE	INSTL CAPABILITY	PRE-INSTL CAPABILITY	RECOVERABILITY	SUPPORT EQUIPMENT	COGNIZANCE CODE	FEDERAL STOCK NUMBER DATA: FEDERAL STOCK NUMBER	MFG. CODE (TSMC)
194-59802- 3		1	BA135								
194-59802- 5		1	BA135								
194-59802- 7		1	BA135								
194-59802- 9		1	BA135								
194-59802- 13		1	BA135	M		F					
194-59802- 15	323 - 35	1	BA135	M		F					
194-59802- 17	323 - 41	1	BA135	M		F					
194-59802- 19	323 - 43	1	BA135	M		F					
194-59802- 21	322 - 96	1	BA135	M		F					
194-59802- 23	322 - 94	1	BA135	M		F					
194-59802- 25		1	BA135								
194-59802- 27	170 - 14	1	BA135	M		F					
194-59802- 31	323 - 27	1	BA135	M		F					
194-59802-103		1	BA135								
194-59802-105		1	BA135								
194-59802-107		1	BA135								
194-59802-109		1	BA135								
194-59802-113		1	BA135	M		F					
194-59802-115		1	BA135	M		F					
194-59802-117		1	BA135	M		F					
194-59802-119		1	BA135	M		F					
194-59802-121		1	BA135	M		F					
194-59802-123		1	BA135	M		F					
194-59802-125		1	BA135								
194-59802-127		1	BA135	M		F					
194-59802-131		1	BA135	M		F					
194-59803- 5	322 - 92	1	BA136	M		F					
194-59803- 7	322 - 86	1	BA136	M		F					
194-59803- 9	322 - 84	1	BA136	M		F					
194-59803- 11	322 - 82	1	BA136	M		F					
194-59803- 49	322 - 88	1	BA136	M		F					
194-59803- 51		1	BA136								
194-59803- 53		1	BA136								
194-59803- 55		1	BA136								
194-59803- 57		1	BA136								
194-59803- 59		1	BA136								
194-59803- 61		1	BA136								
194-59803- 63		1	BA136								
194-59803-105		1	BA136	M		F					
194-59803-107		1	BA136	M		F					
194-59803-109		1	BA136	M		F					
194-59803-111		1	BA136	M		F					
194-59803-149		1	BA136	M		F					
194-59803-151		1	BA136								
194-59803-153		1	BA136								
194-59803-155		1	BA136								
194-59803-157		1	BA136								
194-59803-159		1	BA136								
194-59803-161		1	BA136								
194-59803-163		1	BA136								
194-59804- 5	322 - 32	1	BY 27	M		F					
194-59804- 7	322 - 30	1	BY 27	M		F					
194-59804- 49		1	BY 27								
194-59804- 51		1	BY 27								
194-59804- 55		1	BY 27								
194-59804- 57		1	BY 27								
194-59804- 59		1	BY 27								
194-59804- 61		1	BY 27								
194-59804- 63		1	BY 27								
194-59804-105		1	BY 27	M		F					
194-59804-107		1	BY 27	M		F					
194-59804-149		1	BY 27								
194-59804-151		1	BY 27								
194-59804-155		1	BY 27								
194-59804-157		1	BY 27								
194-59804-159		1	BY 27								
194-59804-161		1	BY 27								
194-59804-163		1	BY 27								
194-61160	332 - 18	1									
194-61160- 3		1	CM119	P	F	O	C		R	1560-344-0439	AMAA
194-61160- 5		1	CM119	M		O					
194-61180		1	CM122	M		O					
194-61181		2	CJ144	M		O					
194-61187	329 - 11	4	CJ325	X1					R	1005-032-1412	B210
	329 - 30										
194-61191		1	CM126	M		O					
194-61213	328 - 24	1									
194-61214	328 - 26	1									
194-61215	328	4							R	1560-323-8468	B210
194-61215- 3	328 - 22	1									
194-61285		1	DG312								
194-63025		1	DM109								
194-63041		1	DH 52								
194-63048		1	DG308								
194-67713	86 - 62	1	BR 78	M		O					
194-67713- 3	86 - 40	1									
194-67719- 5	86	2	BR 78	M		O					
194-68006		1	DJ286								
194-68007		1	DN283								
194-69016	328 - 57	1	CM129	M		O					
194-69016- 3		1	CM129	M		O					
194-69016- 5		1	CM129	M		O					
194-69016- 7		1	CM129	M		O					
194-69016- 9		1	CM129	M		O					
194-71039		1	DM190								
194-71044- 3		1									
194-71044- 5		1									
194-71044- 7		1									
194-71044- 9		1									
194-71045-201		1									
194-71045-301		1		M		O					
194-71045-401		1									
194-71051		1	DP128								
194-71137- 3		1	CJ216	M		O					
194-71137- 5		1	CJ216	M		O					

PART NUMBER	FIGURE AND INDEX	TOTAL QTY.	MICRO-FILM NUMBER	MAINTENANCE CODE DATA: SOURCE CODE	INSTL CAPABILITY	PRE-INSTL CAPABILITY	RECOVERABILITY	SUPPORT EQUIPMENT	FEDERAL STOCK NUMBER DATA: COGNIZANCE CODE	FEDERAL STOCK NUMBER	MFG. CODE (TSMC)
194-71137- 7		1	CJ216	M		O					
194-71137- 11		1	CJ216	M		O					
194-71137- 13		1	CJ216	M		O					
194-71137- 15		1	CJ216	M		O					
194-71137- 17		1	CJ216	M		O					
194-71137- 19		1	CJ216	M		O					
194-71137- 21	122 - 2	1	CJ216	M		O					
	212 - 2										
194-71137- 23		1	CJ216	M		O					
194-71137- 25		1	CJ216	M		O					
194-71137- 27		1	CJ216	M		O					
194-71137- 31	122	1									
	212										
194-71137- 51	122	1	CJ216	M		O					
	212										
194-71138		1	A5251	M		O					
194-71139- 9		1	DG292	M		O					
194-71139- 19		1	DG292	M		O					
194-71139- 21		1	DG292	M		O					
194-71139- 23		1	DG292	M		O					
194-71139- 25		4	DG292	M		O					
194-71215	207 - 23	1	DK110	M		O					
	208 - 22										
	310 - 13										
	310 - 19										
194-71215- 3		1	DK110	M		O					
194-71220		1	DK 79	M		O					
194-71220- 3		1	DK 79	M		O					
194-71220- 5		1	DK 79	M		O					
194-71220- 11		1	DK 79	M		O					
194-71423		1	DP 1								
194-71450		1	AZ 18								
194-71450- 3		1	AZ 18								
194-71450- 5		1	AZ 18	M		O					
194-71450- 7		1	AZ 18	M		O					
194-71450- 11		1	AZ 18	M		O					
194-71451		1	DP 68	M		O					
194-71451- 3		1	DP 68	M		O					
194-71451- 11		1	DP 68	M		O					
194-71452		1	CD 23	M		O					
194-71452- 3		1	CD 23	M		O					
194-71452- 5		1	CD 23	M		O					
194-71453		1		M		O					
194-71453- 3		1		M		O					
194-71454		1	CM136	M		O					
194-71455		1	CJ150	M		O					
194-71456	210	1	CJ151	M		O					
194-71456- 3		1	CJ151	M		O					
194-71457	210	1	CJ152	M		O					
194-71457- 3		1	CJ152	M		O					
194-71460		1	CF257	M		O					
194-71461- 11	210	1	BQ 19	M		F					
	211 - 5										
194-71462- 5		2	BY185								
194-71462- 7		2	BY185								
194-71462- 9		1	BY185	M		O					
194-71462- 11	210 - 26	1	BY185	M		O					
194-71462- 15		2	BY185	M		O					
194-71462- 17		2	BY185	M		O					
194-71463	210 - 27	2	DK128	M		F					
	210 - 28										
194-71465	210 - 41	1	CJ153	M		O					
194-71465- 3		1	CJ153	M		O					
194-71467	210	1									
194-71613		1	DL209								
194-73055	PG. 1004	1									
194-73061	PG. 1004	1	AW420	P1			S		R	1560-048-1656	SNAA
194-73069	PG. 1004	2	AW417	P1			S		R	1560-048-1659	SNAA
194-73301		1	DP 24	U							
194-73304		1	BU182	M		O					
194-73304- 3		1	BU182	M		O					
194-73304- 5		2	BU182	M		O					
194-73310	353 - 26	1	BV 47	M		O					
194-73311	352 - 44	1	AZ106	M		O					
	353 - 24										
194-73311- 3		1	AZ106	M		O					
194-73311- 5		1	AZ106	M		O					
194-74024	PG. 1024	1									
194-74031		1	DN 7								
194-74035		1	DN 64								
194-74113	33 - 37	1	BR161	P1	F	O	S		R	1500-C00-2236	ANAA
	213 - 70										
194-74113- 3		1	BR161	M		O					
194-74113- 5		1	BR161	M		O					
194-74113- 7		1	BR161	M		O					
194-74113- 9		1	BR161	M		O					
194-74113- 11		1	BR161	X1							
194-89061		1	DO125								
194-89852		1	DK183								
194-89852- 11		1	BT107	P1	F	O	R		R	1640-315-5787	ANAA
194-89852- 12		1	BT107	P1	F	O	R		R	1640-315-5788	ANAA
194-89852- 21		1	BT107	P1	F	O	R		R	1640-620-5947	ANAA
194-89852- 22		1	BT107	P1	F	O	R		R	1640-620-5946	ANAA
194-942003		1	DK212								
194-942020	351 - 8	1									
194-942044	362 - 19	1									
194-942045		1	DK195								
194-948126- 3		1	AP 29								
194-948130		1	DL210								
194-948131		1	DL211								
194-948132		1	BS176								
194-956161		1									
194-973308		1	CM152								
196-42010		2	DL 16								
1969-6-020		1									

PART NUMBER	FIGURE AND INDEX	TOTAL QTY.	MICRO-FILM NUMBER	MAINTENANCE CODE DATA: SOURCE CODE	INSTL CAPABILITY	PRE-INSTL CAPABILITY	RECOVERABILITY	SUPPORT EQUIPMENT	FEDERAL STOCK NUMBER DATA: COGNIZANCE CODE	FEDERAL STOCK NUMBER	MFG. CODE (TSMC)
1969-6-200	170 - 9	1							R	1650-540-1658	Y120
199000		1							R	1660-528-2563	Y120
199000-1	352 - 12	1		P1	F	O	R		R	4730-630-0310	Y120
	352A- 22	1									
199000-2	352 - 3	1		P1	F	O	R		R	4730-630-0311	Y120
	352A- 15	1									
199001	352A- 21	1									
199002	352A- 20	1									
199003	352A- 16	1									
199004	352A- 19	2									
199006	352A- 35	1									
199007	352A- 29	1									
199008	352A- 28	1									
199009	352A- 4	1									
	352A- 26	1									
	352A- 38	1									
199010	352A- 31	1									
199012	352A- 23	1									
199013	352A- 11	1									
	352A- 34	1									
	352A- 44	1									
199014	352A- 10	1									
	352A- 33	1									
	352A- 45	1									
199015	352A- 32	1									
2-0600	116 - 6	1		P1					R	2915-516-1574	Y120
2-21234	95 - 73	1									
	97 - 74										
2-3800		2		P1	F	O	R		R	2915-606-7068	Y120
2-53789-13	355	1									
	PG. 1016										
2-53789-15	355	1									
	PG. 1016										
2-53789-17	355	1									
	PG. 1016										
2-53789-19	355	1									
	PG. 1016										
2-53789-3	355	1							R	1680-037-1172	X110
	PG. 1016										
2-53789-5	355	1							R	1680-098-2337	X110
	PG. 1016										
2-53789-7	355	1							R	1680-098-2338	X110
	PG. 1016										
2-53789-9	355	1							R	1680-098-2339	X110
	PG. 1016										
2-57492-13	PG. 1016	1									
2-57492-15	PG. 1016	1									
2-57492-17	PG. 1016	1									
2-57492-19	355	1									
	PG. 1016										
2-57942-13	355	1									
2-57942-17	355	1									
2AT-3	230 - 4	2									
2AT5	279	3							R	5930-548-4337	D334
	300 - 22										
	301 - 17										
2B1-10-5		1									
2B1-3-2		2									
2B1-6-2		2									
2B1-6-3		1									
2B1-6-4		2									
2B1-6-5		2									
2B1810-2		9		M		F					
2B189-2		3									
2C12		15		M		F					
2C12-1	91	22		M		F					
2C12-13		1		M		O					
2C12-2		3		M		F					
2C12-3	358	5		M		O					
2C12-4		8		M		F					
2C12-5		97		M		F					
2C12-6		16		M		F					
2C12-7		10		M		F					
2C12S		1		M		O			R	9515-596-1728	GH80
2C13-4		6		M		O					
2C15	342 - 13	3		M		O					
	342 - 31										
	342 - 48										
2C15-4		1		M		O					
2C16-3		7		M		F					
2C18		2		M		O					
2C19-2		1		M		O					
2C20		4									
2C20-1		2									
2C21		1		M		O					
2C21-2		1		M		O					
2C28	78	11		M		O					
2C29-12		9		M		F					
	347	1									
2C29-16		2		M		O					
2C29-8		34		M		O					
2C30-1		1		M		O					
2C31		4		M		O					
2C31-3		1		M		O					
2C32-4		6									
2C32-4A		5		M		O					
2C33		1									
2C33-1		1		M		F					
2C34-1		1		M		F					
2C34-2		1		M		F					
2C34-5		1		M		F					
2C34-6		2		M		F					
2C34-7		2		M		F					
2C34-8		3		M		F					
2C37-1		4		M		F					

PART NUMBER	FIGURE AND INDEX	TOTAL QTY.	MICRO-FILM NUMBER	MAINTENANCE CODE DATA: SOURCE CODE	INSTL CAPABILITY	PRE-INSTL CAPABILITY	RECOVERABILITY	SUPPORT EQUIPMENT	FEDERAL STOCK NUMBER DATA: COGNIZANCE CODE	FEDERAL STOCK NUMBER	MFG. CODE (TSMC)
2C37-2		4		M		F					
2C38-1		4		M		O					
2C38-2		3		M		F					
2C39-11		1									
2C39-A1		2		M		O					
2C5		2		M		F					
2C5-1		2		M		F					
2C9-2		2		M		F					
2C929-8		1									
2F4-2	204	2		M		F					
2HA1-LH	225 - 70	1									
2HA1-LH-1	259 -101	1		P					P	5930-090-4307	D444
2HA1-LH-2	225 - 29	4		P					P	5930-090-4303	D444
	225 - 59										
	225 - 70										
	259 - 22										
	259 -169										
2HA1-RH-1	259	1		P1					P	5930-090-4304	D444
2HA1-RH-2	259 -253	1		P					P	5930-090-4305	D444
2HA2-LH-1	316	1							P	5930-693-5532	D334
2HA2-RH-2	316 - 49	1		P1					R	5930-323-2101	D334
2HA2LH2		1							P	5930-323-2101	D334
2HA2RH1		1							P	5930-505-7713	D334
2J1		1		A		F					
2L7		7									
2L7-2	171 - 53	34		M		O			P	5940-245-9493	D446
	242										
	285A	1									
	355										
	357										
	PG. 1016										
	PG. 1025										
2L7-3		4									
2P7-13-5C-7/8	10 - 75	2		M		F					
2P7-9-10-1/2	19 - 12	2		M		F			R	1560-037-2513	ANAA
2P7-9-10-7/16	19 - 16	2		M		F			R	1560-037-2514	ANAA
2P7-9-12-7/16	19 - 41	2		M		F			R	1560-037-2515	ANAA
2P7-9-12-7/8		1									
2P7-9-16-7/16	19 - 17	2		M		F			R	1560-037-2516	ANAA
2P7-9-17-5/8	19 - 40	2		M		F			R	1560-037-2517	ANAA
2P7-9-20	19 - 13	2		M		F			R	1560-037-2518	ANAA
2P7-9-24-7/8	44 - 18	1									
2P7-9-29-1/8	19 - 14	2		M		F			R	1560-037-2519	ANAA
2P7-9-30-11/32	19 - 42	2		M		F			R	1560-037-2520	ANAA
2P7-9-30-15/16	19 - 15	2		M		F			R	1560-037-2521	ANAA
2P7-9-33-15/16	19 - 39	2		M		F			R	1560-037-2522	ANAA
2P7-9-53-13/16		2							R	1560-037-2523	
2P7-9-54-1/16	19 - 38	2		P	F	O	C		R	1560-569-2481	ANAA
2P9-11-49	335 - 35	1									
2P9-24-7/8		2									
2P9-3-10		2									
2P9-3-14		1									
2P9-5-8	16	2									
2P9-53-13/16		2									
2P9-7-16	341 - 8	4									
2P9-7-8	112 - 43	1									
2R6-10-6-10		10		P1	F	O	C				
2R6-10-6-7		4									
2R6-6-3-10	118 - 44	8		P1	F	O	C				
	118 - 53										
2R6-6-3-4	352 - 10	1									
2R6-6-3-8	118 - 45	12		P1	F	O	C				
	118 - 54										
2R6-6-7-11		2									
2R6-8-4-10	118 - 24	12		P1	F	O	C				
	118 - 43										
2R6-8-4-8	118 - 23	16		P1	F	O	C				
	118 - 42										
2R6-8-6-10		6		P1	F	O	C				
2R6-8-7-11		4									
2R6-8-7-12	119 - 11	2		P1	F	O	R				
2R6-8-7-8		4									
2R6-8-8-6		4		P1	F	O	C				
2S1B-616	23	20									
2S7-3		1		M		F					
2V11-44-30		1		P1	F	O	C		R	1560-574-2452	ANAA
2V12-32	154 - 40	1		P1	F	O	S		P	4730-540-4305	ANAA
	358										
2V12-40		1									
2V12-56	154 - 77	1		P1	F	O	C		R	4730-540-4307	ANAA
	154 - 78										
	162 - 11										
	358										
2V6-40	154 - 62	2									
2V6-56	137 - 48	1		P1	F	O	S		R	4730-540-4306	ANAA
	154 - 15										
	358										
2W1-10-10-40	48 - 4	1									
2W1-10-9-30		2		M		O					
2W1-12-10-032	18 -136	10									
	357										
2W1-12-18-32		5									
2W1-12-18-63	80	5									
2W1-12-22-063	47 - 34	4									
2W1-12-22-078		4									
2W1-12-24-62	45 - 99	2		M		O					
2W1-129-88-20	64	AR		M		O					
2W1-129-88-32	64	AR		M		O					
2W1-129-88-45	64	AR		M		O					
2W1-13-10-32	65 - 18	1		M		O					
2W1-13-14-064		8		M		O					
2W1-13-14-32	355 -187	4									
	PG. 1016										
	PG. 1024										
2W1-13-18-64	203	2									

PART NUMBER	FIGURE AND INDEX	TOTAL QTY.	MICRO-FILM NUMBER	MAINTENANCE CODE DATA: SOURCE CODE	INSTL CAPABILITY	PRE-INSTL CAPABILITY	RECOVERABILITY	SUPPORT EQUIPMENT	FEDERAL STOCK NUMBER DATA: COGNIZANCE CODE	FEDERAL STOCK NUMBER	MFG. CODE (TSMC)
2W1-13-20-63		2									
2W1-13-24-063		AR									
2W1-13-28-047P		1									
2W1-14-11-32	45 -163	2									
2W1-16-16-20		2									
2W1-16-16-63	366	42									
2W1-16-20-32	36	4		M		O					
2W1-16-20-6A	204 - 51	1									
2W1-16-20-64	204 - 51	1		M		O					
	PG. 1013										
2W1-16-22-078	48 - 33	4		M		O					
2W1-16-22-63	334 - 51	3									
2W1-16-24-.063	363 - 41	2									
	363 - 67										
2W1-16-24-32	205 - 46	1									
2W1-16-24-63	117 - 13	2		M		O					
2W1-16-24-64	PG. 1005	1									
2W1-16-28-063	65 - 44	1									
2W1-16-32-125	225 - 61	1									
2W1-17-16-32	355 - 88	8		M		O			R	5310-596-8648	ANAA
	355 -199										
	PG. 1015										
	PG. 1016										
2W1-17-16-63	54 - 24	2		M		O					
2W1-17-17-32	PG. 1023	4									
2W1-17-18-65		4									
2W1-17-24-063	20 - 43	AR									
2W1-1716		1									
2W1-18-16-032	71	1									
2W1-20-16-32		8									
2W1-20-16-64	34	6		M		O					
2W1-21-18-63	366 - 51	8									
2W1-21-26-064	128 - 31	2		M		O					
2W1-21-32-64	43 -108	4		M		O					
2W1-24-20-63	366 - 47	8									
	366 - 67										
2W1-24-24-16		1									
2W1-24-24-32		2									
2W1-24-26-064		1									
2W1-24-26-091	65 - 41	1									
2W1-24-28-62	45 -105	2		M		O					
2W1-24-37-125		2									
2W1-24-32-64	64 - 18	3		M		O					
	64 - 36										
	64 - 88										
2W1-24-34-125		3									
2W1-25-20-16	355 -170	4		M		O					
	PG. 1016										
	PG. 1025										
2W1-25-20-63	355 -169	20		M		O					
	PG. 1016										
	PG. 1025										
2W1-28-22-032		4		M		O					
2W1-28-32-64		1		M		O					
2W1-28-34-62	45 -118	2		M		O					
2W1-29-20-.025		4									
2W1-29-40-63	88 - 19	1		M		O					
2W1-32-28-63	366 - 14	20									
	366 - 19										
	366 - 28										
	366 - 33										
	366 - 53										
	366 - 63										
2W1-32-36-63	45 - 85	2		M		O					
2W1-33-28-90	PG. 1007	2									
2W1-33-32-125		2									
2W1-34-32-32	PG. 1004	1									
2W1-34-52-93	PG. 1004	1									
2W1-41-38-20	86 - 12	AR		M		O					
2W1-41-38-42	66 - 13	AR		M		O					
2W1-41-38-63	66 - 14	AR		M		O					
2W1-48-36-64	191 - 17	5		M		O					
	191 - 31										
	192 - 9										
2W1-52-38-20	65 - 22	AR		M		O					
2W1-56-46-093	68 - 22	1									
2W1-57-48-125	122	2									
	125	1									
2W1-58-46-093		1		M		O					
2W1-64-56-63	366 - 23	2									
2W1-68-43-20	58 - 22	1									
2W1-8-12-32		1									
2W1-8-32-125		2		M		O					
2W1AL-10-17-16	241 - 45	8									
2W1AL-12-12-64	220	1									
2W1AL-13-14-16	35	2									
2W1AL-14-14-16	284A- 13	11									
	285A- 60										
	287A										
2W1AL-14-14-32	343	2									
	345A										
	346A	1									
2W1AL-14-14-64		8									
2W1AL-14-24-32	98	4									
2W1AL-14-24-324	100	4									
2W1AL-14-4-32	367 - 13	1									
2W1AL-16-32.125	363 - 45	2									
2W1AL-16-32-125	363 - 73	2									
2W1AL-17-28-32		2									
2W1AL-17-32-64	329 - 18	4									
2W1AL-24-34-125		1									
2W1AL-34-32-125		1									
2W1AL-57-48-125		1									
2W1ALB12-40	47	2									
2W1ALP25-25-64	147 - 12	3									

PART NUMBER	FIGURE AND INDEX	TOTAL QTY.	MICRO-FILM NUMBER	MAINTENANCE CODE DATA: SOURCE CODE	INSTL CAPABILITY	PRE-INSTL CAPABILITY	RECOVERABILITY	SUPPORT EQUIPMENT	FEDERAL STOCK NUMBER DATA: COGNIZANCE CODE	FEDERAL STOCK NUMBER	MFG. CODE (TSMC)
2W1ALP25-64		5		M		O					
2W1ALP28-21-16	56 - 63	16		M		F					
	60 - 36										
2W1ALP28-21-32	56 - 64	16		M		F					
	60 - 37										
2W1ALP45-35-40		1		M		O					
2W1ALP65-46-40		3		M		O					
2W1ALP69-46-40		3									
2W1ALP77-53-40	84 - 9	1		M		O					
2W1ALP84-76-64		2		M		O					
2W1ALV-12-40		2									
2W1AL10-10-16		8		P1	F	O	C				
2W1AL10-10-32	93	8									
	94										
	95										
	97										
2W1AL10-12-16	213 - 32	8		M		O					
	241 - 33										
	241 - 72	4									
2W1AL10-12-32	274	4									
2W1AL10-14-40	323 - 22	2		M		O					
2W1AL10-16-032	PG. 1004	2									
	PG. 1005										
2W1AL10-16-32	PG. 1004	2									
2W1AL10-18-093	164	16									
2W1AL10-32-20		1		M		O					
2W1AL10-7-31		4		M		F					
2W1AL10-8-16		2		P1	F	O	C				
2W1AL10-8-32	338 - 44	20		M		O					
	338 - 53										
	339 - 84										
	339 - 91										
	339 -100										
	339 -107										
2W1AL10-9-50		2		M		O					
2W1AL100-68-20	338 - 94	2									
	339 - 36										
2W1AL11-12-16	227	2		M		O					
2W1AL11-12-32	44	2									
	231										
2W1AL11-16-16		2									
2W1AL11-9-29	271 - 22	4									
2W1AL11-9-32		4									
2W1AL12-10-32		1									
2W1AL12-12-16	122	181		M		O					
	212										
	214 - 2										
	214 - 17										
	270 - 51										
2W1AL12-12-31		2									
2W1AL12-12-32	44	2									
2W1AL12-12-64	240 - 8	4		M		O					
2W1AL12-14-16	83 - 94	4									
2W1AL12-14-62	71	4									
2W1AL12-14-64	44	4		M		O					
	83 - 95										
2W1AL12-16-160	316 - 52	2									
2W1AL12-16-40		2		M		O					
2W1AL12-18-032	58 -118	1									
2W1AL12-18-32	240 - 9	1		M		O					
2W1AL12-18-64		6		M		O					
2W1AL12-24-64	266 - 17	7									
2W1AL12-26-40	332	104		M		O					
2W1AL12-28-031	PG. 1004	4									
2W1AL12-28-081	PG. 1005	2									
2W1AL12-32-30	266 - 57	AR									
2W1AL12-36-90	PG. 1010	2									
2W1AL12-52-90	PG. 1010	1									
2W1AL12-8-32	96	12		M		O					
	98										
	100										
	102 -133										
	103 -108										
	105 - 35										
	107 - 17										
	107 - 26										
	104 - 26	2									
	104 - 33	2									
	104 - 40	2									
2W1AL124-26-032		4									
2W1AL13-1P-032		2		M		O					
2W1AL13-10-32	259 -141	8		M		O					
2W1AL13-11-032		2									
2W1AL13-12-32	42 - 30	8		M		O					
2W1AL13-13-40		4		M		O					
2W1AL13-14-032	12	3									
2W1AL13-14-040	64 - 3	4									
2W1AL13-14-16	44 - 32	13		M		O					
	51 - 49										
2W1AL13-14-32	113	8		M		O					
2W1AL13-14-40	259 - 42	4		M		O					
2W1AL13-14-64	44	11									
	50										
2W1AL13-14-65	308	2									
	309										
2W1AL13-14-91	259 - 46	3		M		O					
2W1AL13-16-32		5									
2W1AL13-16-40		8		M		O					
2W1AL13-16-62	94	4									
2W1AL13-18-64	64 - 55	7		M		O					
2W1AL13-20-63	70	39									
	74										
	358										
2W1AL13-24-032	163 -110	2									
2W1AL13-24-32		1									

PART NUMBER	FIGURE AND INDEX	TOTAL QTY.	MICRO-FILM NUMBER	MAINTENANCE CODE DATA: SOURCE CODE	INSTL CAPABILITY	PRE-INSTL CAPABILITY	RECOVERABILITY	SUPPORT EQUIPMENT	FEDERAL STOCK NUMBER DATA: COGNIZANCE CODE	FEDERAL STOCK NUMBER	MFG. CODE (TSMC)
2W1AL13-24-63	112 - 22	2									
2W1AL13-24-64	44	1		M		O					
2W1AL13-28-32		1									
2W1AL14-14-16	17	85									
	44										
	48										
	122										
	284 - 27										
	285 - 64										
	285 - 94										
	287 - 25										
	306										
	338										
	339										
2W1AL14-14-32	209 - 13	8		M		O					
	211										
2W1AL14-14-40	211	2		M		O					
2W1AL14-14-430		2		M		O					
2W1AL14-14-64	355	12		M		O					
	PG. 1016										
	PG. 1025										
2W1AL14-16-125	213	2									
2W1AL14-16-188		5		M		O					
2W1AL14-16-40	47	4									
2W1AL14-26-40	311 - 3	8		M		O					
2W1AL16-13-32	189 - 89	1									
2W1AL16-14-16		8		M		O					
2W1AL16-14-188	357	2									
2W1AL16-14-32	17	20		M		O					
	338 - 40										
	338 - 55										
	339 - 22										
	339 - 98										
2W1AL16-16-32	68 - 26										
	50 - 33	28		M		O					
2W1AL16-20-63	352 - 28	2		M		O					
2W1AL16-20-64	203 - 81	2		M		O					
2W1AL16-22-091	89 - 50	1									
2W1AL16-28-64		2									
2W1AL16-30-51	200 -136	4		M		O					
2W1AL16-32-32		28									
2W1AL16-32-51	274 - 20	4		M		O					
2W1AL17-11-62		1									
2W1AL17-11-64	209 - 18	1									
2W1AL17-16-.020		1		M		O					
2W1AL17-16-.040		2		M		O					
2W1AL17-16-.064		14		M		O					
2W1AL17-16-020	33	AR									
2W1AL17-16-040	33	AR									
2W1AL17-16-064	33	AR									
2W1AL17-18-16	172	1									
	172 - 4	1									
	179 - 9										
2W1AL17-18-24		4									
2W1AL17-18-64	50	4									
	113										
2W1AL17-20-64	182 -180	4									
2W1AL17-24-63	138 - 4	1									
	176 - 56										
2W1AL17-28-32	204 - 52	3									
	204 - 58										
	PG. 1013										
	PG. 1016										
	PG. 1025										
2W1AL17-34-32	176 - 81	1									
2W1AL17-38-62	113	1									
	358										
2W1AL18-16-32		2		M		O					
2W1AL18-20-125	361 - 31	2									
	361 - 37										
2W1AL18-20-64	44	1									
2W1AL18-22-091		1									
2W1AL18-24-32	358	4		M		F					
2W1AL18-24-51	95 -130	6		M		F					
	97 -131										
	358										
2W1AL18-24-62		4		M		F					
2W1AL18-24-64	113 - 58	4		M		O					
2W1AL18-32-125	191 - 2	1		M		O					
	351 - 69										
2W1AL19-16-40		2									
2W1AL20-22-51		2		M		O					
2W1AL20-28-63	45 - 13	2									
2W1AL20-32-62	180 -103	1		M		O					
2W1AL21-12-16		8									
2W1AL21-16-64	2	3									
2W1AL21-20-32	183 -129	1									
2W1AL21-28-64		1									
2W1AL21-30-91	191 - 38	3		M		O					
	191 - 55										
	192 - 12										
2W1AL22-28-32	53 - 65	3									
2W1AL23-24-32	52 - 28	2									
2W1AL24-18-32		1									
2W1AL24-20-60		1									
2W1AL24-20-64		1									
2W1AL24-22-016	303	1									
2W1AL24-22-16		1									
2W1AL24-22-32	180 - 91	1									
2W1AL24-24-32	287 - 47	2									
	297 - 13										
	298 - 32										
2W1AL24-26-016	303	1		M		O					
2W1AL24-26-032	303	2									
2W1AL24-26-062		1									

PART NUMBER	FIGURE AND INDEX	TOTAL QTY.	MICRO-FILM NUMBER	MAINTENANCE CODE DATA: SOURCE CODE	INSTL CAPABILITY	PRE-INSTL CAPABILITY	RECOVERABILITY	SUPPORT EQUIPMENT	COGNIZANCE CODE	FEDERAL STOCK NUMBER DATA: FEDERAL STOCK NUMBER	MFG. CODE (FSMC)
2W1AL24-28-125	279 - 7	3		M		0					
2W1AL24-28-95		3		M		0					
2W1AL24-32-125	297 - 10	2									
2W1AL24-32-32	53 - 58	3		M		0					
2W1AL24-34-125	234 - 6	1		M		0					
	235 - 6										
	297 - 11										
	298 - 24										
2W1AL25-10-032	279 - 14	2									
2W1AL25-20-.032		2									
2W1AL25-20-032	234 - 14	4		M		0					
	235 - 14										
2W1AL25-20-063		8									
2W1AL25-22-64	234 - 98	2		M		0					
	235 - 97										
2W1AL25-25-64	161 - 11	1									
2W1AL25-28-.063		1									
2W1AL25-28-063	234 - 13	2									
	235 - 13										
	279 - 13										
2W1AL25-30-.032		2									
2W1AL25-30-91	191 - 47	4		M		0					
	192 - 26										
	192 - 33										
2W1AL26-17-24	205 -108	4									
2W1AL26-22-32	87	2		M		0					
2W1AL26-24-16		12									
2W1AL26-28-40		1		M		0					
2W1AL28-22-32	180 - 90	1		M		0					
2W1AL28-26-062		1									
2W1AL28-28-16	58 - 88	1									
2W1AL29-24-32		4		M		0					
2W1AL30-20-40	51 - 12	2		M		0					
2W1AL30-22-016	315	25									
2W1AL30-22-16	271	15		M		0					
	296										
	300										
	301										
	305										
	306										
	313										
	315										
	318										
2W1AL30-22-17		10		M		0					
2W1AL32-26-32	351	4		M		0					
2W1AL33-22-64	2 - 11	2		M		0					
2W1AL33-24-22		1									
2W1AL33-24-32	183 -149	1									
2W1AL33-28-16	61 - 59	AR									
2W1AL33-28-20	61 - 60	AR									
2W1AL33-28-25	61 - 61	AR									
2W1AL33-28-32	247	1									
2W1AL33-29-40	141 - 57	2		M		0					
2W1AL33-30-91	191 - 10	2		M		0					
	191 - 24										
	192 - 2										
2W1AL34-22-016		1									
2W1AL34-24-15	228	18		M		0					
	303 - 31										
	304 - 40										
2W1AL34-24-20	214 - 10	21		M		0					
	314 - 62										
	316 - 63										
	319 - 52										
2W1AL34-32-125	298 - 29	1									
2W1AL34-40-63	68 - 29	1		M		0					
2W1AL37-25-32	183 -130	1									
2W1AL37-26-250	321	1		M		0					
	323										
2W1AL37-27-64	144	2		M		0					
2W1AL37-31-40	146 - 7	2		M		0					
2W1AL40-32-16	286	1									
	299										
2W1AL41-28-64	141	4		M		0					
2W1AL41-33-40	143 - 36	2		M		0					
2W1AL41-38-16	51 - 98	2		M		0					
2W1AL42-30-16	269A- 12	1									
2W1AL45-36-62	83 - 39	1		M		0					
2W1AL46-30-16	61 - 44	18		M		0					
	61 - 81										
2W1AL46-30-20	61 - 45	10		M		0					
	61 - 82										
2W1AL46-30-25	61 - 46	10		M		0					
	61 - 83										
2W1AL48-35-32		4		M		0					
2W1AL48-38-25	83 - 26	AR		M		0					
2W1AL48-40-32		4									
2W1AL48-40-62		2		M		0					
2W1AL49-35-16		AR									
2W1AL50-35-16	58 - 14	2		M		0					
	58 - 34										
2W1AL50-35-32	58 - 12	1		M		0					
	58 - 33										
2W1AL56-48-015	65 - 82	AR									
2W1AL56-56-64	PG. 1005	2									
2W1AL57-46-63	80	3									
2W1AL57-46-64		2		M		0					
2W1AL57-48-090		1									
	125	1									
2W1AL57-48-125	129	1									
2W1AL6-10-64		1		M		0					
2W1AL6-16-40	45	8		M		0					
2W1AL61-45-40	157 - 22	2		M		0					
	166 - 15										
	167 - 11										

PART NUMBER	FIGURE AND INDEX	TOTAL QTY.	MICRO-FILM NUMBER	MAINTENANCE CODE DATA: SOURCE CODE	INSTL CAPABILITY	PRE-INSTL CAPABILITY	RECOVERABILITY	SUPPORT EQUIPMENT	COGNIZANCE CODE	FEDERAL STOCK NUMBER DATA: FEDERAL STOCK NUMBER	MFG. CODE (FSMC)
2W1AL65-46-40	145 - 23	2		M		0					
2W1AL7-16-015	PG. 1005	2									
2W1AL73-60-64	30 - 30	2		M		0					
2W1AL77-53-40	131 - 34	1		M		0					
2W1AL8-10-32	284 - 24	24									
2W1AL8-12-40		2		M		0					
2W1AL8-8-16	285 - 22	34		M		0					
	285 - 68										
	285 - 91										
	287 - 22										
	314										
	319										
2W1AL9-14-51	PG. 1015	4		M		0					
	PG. 1023										
2W1AL9-16-40	25 - 6	4		M		0					
2W1AL96-68-63		2									
2W1AP33-29-64		2		M		0					
2W1AT-30-20-016		1		M		0					
2W1A130-22-16	300	1									
2W1B17-16-20	71 - 57	6									
2W1B25-18-64	234 - 95	1		M		0					
	235 - 94										
2W1B25-20-64	234 - 76	12		M		0					
	235 - 75										
	236 - 14										
2W1B25-21-64	234 - 94	3		M		0					
	235 - 93										
2W1B4		2		M		0					
2W1C-21-24-063	330 - 20	1									
2W1C10-22-63		2									
2W1C12-14-25	355 -204	1									
2W1C13-14-63		2		M		0					
2W1C13-32-50		4		M		0					
2W1C14-14-32		1									
2W1C16-14-62		2		M		0					
2W1C16-22-63	66 - 39	2		M		0					
2W1C17-23-187	184 - 76	1									
2W1C17-23-189		1									
2W1C17-24-64	184 - 78	1									
2W1C17-28-312	184 - 77	1									
2W1C17-28-63	209 - 10	4		M		0					
2W1C17-68-64	184 - 75	1									
2W1C18-10-32		2		M		0					
2W1C20-16-62		2		M		0					
2W1C20-20-64		8									
2W1C20-24-10	66 - 9	AR									
2W1C20-24-16	66 - 10	AR									
2W1C20-24-32	66 - 8	AR									
2W1C20-24-83	200 - 53	2		M		0					
2W1C20-28-10		5		M		0					
2W1C20-28-16		2		M		0					
2W1C20-28-32		1		M		0					
2W1C21-24-64	329 - 13	4									
2W1C24-24-32	66 - 41	3									
2W1C25-28-20	47 - 57	4									
2W1C33-34-32	355 -177	1		M		0					
	PG. 1015										
2W1C41-38-20		AR									
2W1C41-38-42		AR									
2W1C41-38-63		AR									
2W1C6-12-32	355	1									
2W1C72-48-10	64 -106	4		M		0					
2W1C72-48-16	66 - 65	2		M		0					
2W1C72-48-32	66 - 64	11		M		0					
2W1C72-48-63	66 - 63	1		M		0					
2W1C88-54-10	64	4		M		0					
2W1C88-54-16	66 - 61	2		M		0					
2W1C88-54-37	64	11		M		0					
	66 - 60										
2W1C88-54-63	66 - 59	1		M		0					
2W1F12-12-64		1									
2W1G-12-14-25		1		M		0					
2W1G-6-12-32		1		M		0					
2W1G12-14-25	PG. 1018	1									
	PG. 1024										
2W1G6-12-32	PG. 1018	1									
	PG. 1024										
2W1LB12-12-32	30 - 69	2									
2W1LB129-88-10	64	AR		M		0					
2W1LB28-21-032		AR									
2W1LB28-24-032	65 - 73	AR									
2W1LB32-24-62	45 - 82	2		M		0					
2W1LB40-26-32	45 -101	4		M		0					
2W1P-16-24-125		1									
2W1P12-12-31	241 - 24	2									
	241 - 40	2									
2W1P12-18-63	305 - 34	6									
	306 - 38										
2W1P12-18-68		8		M		0					
2W1P13-28-63	241 - 29	4		M		0					
	241 - 50	4									
	241 - 67	2									
2W1P16-14-31	295 - 20	2		M		0					
2W1P16-24-125		1									
2W1R29-28-250		1		M		0					
2W1R29-38-250	140 - 19	1									
2W1R40-30-62	124 - 95	4		M		0					
2W1SR16-16-62	140 - 20	2		M		0					
2W1V29-22-62	136	1		M		0					
	137										
2W1V37-26-64	163	3		M		0					
2W1V49-32-62	136	3		M		0					
	137										
2W10-10		4		P					R	1560-373-6916	
2W10-12		30		P					P	5310-639-6957	ANAA

PART NUMBER	FIGURE AND INDEX	TOTAL QTY.	MICRO-FILM NUMBER	MAINTENANCE CODE DATA: SOURCE CODE	INSTL CAPABILITY	PRE-INSTL CAPABILITY	RECOVERABILITY	SUPPORT EQUIPMENT	FEDERAL STOCK NUMBER DATA: COGNIZANCE CODE	FEDERAL STOCK NUMBER	MFG. CODE (TSMC)
2W10-14	91 - 21										
	23	38		P	F	O	C		R	5310-639-6956	ANAA
	68 - 69										
	89										
2W10-18	91 - 17	2		P	F	O	C				
2W10-4	2	416		P					R	5310-596-9507	ANAA
	14										
	15										
	16 - 3										
	16 - 8										
	16 - 52										
	16 - 65										
	16 - 6A										
	16 - 73										
	16 - 77										
2W10-5	2	143		P					R	5310-639-6953	ANAA
	12 - 13										
	15										
	16										
	17										
	19 - 8										
	24										
	52 - 21										
	59A										
	121 - 7										
2W10-6	2	136		P					R	5310-639-6954	ANAA
	15										
	16 -145										
	17 - 64										
	17 - 68										
	23										
	24										
	45										
	84 - 20										
	84 - 76										
	116 - 52										
	174 - 79										
2W10-7	2	48		P					R	5310-639-6955	ANAA
	15										
	24										
	25 - 69										
	116 - 21										
2W10-8	17	18		P					R	5310-209-3444	ANAA
2W10-9	32 - 14	4		P					R	5310-639-6956	ANAA
2W11-4	25 - 14	2		P							
	45 - 42										
	54 - 47										
2W11-5	204 - 65	1									
2W11-7	167 - 20	2		P							
2W11A4	189 -112	1									
2W11A5	163 -115	1		P	F	O	C		R	5310-638-5176	G192
2W12-10	141 - 56	2		M		F					
2W12-11	146 - 8	2		M		F					
2W12-12	143 - 37	4		M		F			R	5330-202-3770	ANAA
	168 - 17										
2W12-13		1		M		O					
2W12-16	138 - 27	1									
2W12-18	157 - 23	2		K		F					
	166 - 16										
	167 - 12										
2W12-19	145 - 22	3		M		F			R	5330-663-8867	ANAA
	156 - 20										
	282 - 16	1									
2W12-21	128 - 12	2		M		F					
2W12-22	84 - 10	4		M		O					
	131 - 13										
	131 - 23										
2W12-5	155 - 50	1									
2W12-6	155 - 65	1									
2W12-7	147 - 13	4									
	161 - 12										
2W13-10M	285	3									
2W13-4	35	14		P1					R	5310-094-3903	ANAA
	76										
	180 - 68										
	193										
	194										
2W13-416		1									
2W13-416M	111	1									
2W13-5	43	4		P1	F	O	C		P	5310-094-6904	
	51 - 10										
2W15-10	156 - 11	2		P							
	183 -126										
2W15-11	157 - 11	2		P	F	O	C		P	5310-597-8650	G192
	166 - 10										
	167 - 5										
2W15-12	145 - 10	3		P	F	O	C		P	5300-C00-9A28	G192
2W15-15	131 - 27	1							P	5310-212-8096	G190
2W15-16	128 - 4	2		P	F	O	C		P	5310-597-8651	G192
2W15-38-24-20	95	1									
	97										
	358										
2W15-416M		8									
2W15-5	141 - 49	10		P	F	O	C		R	5310-390-6425	G190
	146 - 3										
	147 - 7										
	163										
	175 - 24										
	176 - 49										
	177 - 3										
	180 - 15										
	189 - 51										
	202 - 2										
	206 - 2										
2W15-5A	175 - 8	2									

PART NUMBER	FIGURE AND INDEX	TOTAL QTY.	MICRO-FILM NUMBER	MAINTENANCE CODE DATA: SOURCE CODE	INSTL CAPABILITY	PRE-INSTL CAPABILITY	RECOVERABILITY	SUPPORT EQUIPMENT	FEDERAL STOCK NUMBER DATA: COGNIZANCE CODE	FEDERAL STOCK NUMBER	MFG. CODE (TSMC)
2W15-6	161 - 8	3		P	F	O	C				
	168 - 15										
	176 - 86										
2W15-7	143 - 29	2		P	F	O	C				
	176 -106										
	176 -114										
	176 -122										
2W15-8		1		P					R	5310-390-6426	G190
2W15-9	138 - 25	1									
2W16		AR									
2W16-10M	93 - 75	4									
2W16-416M	19 - 46	6									
	20 - 35										
2W16-6L		2									
2W16-616		2									
2W17-10	10	21									
	56 - 22										
	79										
	357										
	PG. 1007										
2W17-10L	33	6		M		F					
	56 - 42										
2W17-10M	95 -126										
	97 -128										
	33	142		M		O					
	60 - 8										
	119										
	330 - 5										
	330 - 7										
	330 - 35										
	334 - 74										
	334 -175										
	334 -187										
	334 -197										
	337	3									
2W17-1016	362A	4									
2W17-1019		1									
2W17-1216	334 -154	4									
2W17-4	PG. 1011	2									
2W17-4L	341 - 9	1									
2W17-4M		8									
2W17-416	31 - 2	32		M		O					
	33										
	76 - 45										
	79										
	80 - 45										
	182 -105										
	183 -103										
	329 - 2										
	329 - 21										
	335A- 26										
	358										
	362A										
	364 - 36										
2W17-416L	56 - 31	8		M		F					
2W17-416M	33	22		M		O					
	76 - 44										
	77										
	117 - 19										
	117 - 38										
	333 - 86										
	335A- 8										
	335A- 21										
2W17-516	66 - 26	68		M		F					
	76 - 49										
	80 - 47										
	329 - 8										
	329 - 27										
	331 - 25										
	355										
	362 - 40										
	362 - 45										
	362A										
2W17-516L	56 - 62	32		M		O					
	60 - 35										
2W17-516M	79	52		M		F					
2W17-6	242	5		M		F					
	271 - 27										
2W17-6L	264 - 17	8									
2W17-616	48 - 53	16		M		F					
	80 - 19										
	182 - 88										
	182 - 91										
	183 - 9										
	183 - 87										
	183 - 90										
	346 - 36										
	347 - 49										
	362 - 23										
	PG. 1007										
2W17-616L	48	AR									
	48	AR									
2W17-616M	98 - 78	8		M		F					
	99 -111										
	100 -216										
	105 - 12										
	104 - 11	2									
	182 - 85										
	182 -100										
	183 - 84										
	183 - 98										
	334 -202										
	358										
	PG. 1008										
2W17-716	362 - 28	12									

PART NUMBER	FIGURE AND INDEX	TOTAL QTY.	MICRO-FILM NUMBER	MAINTENANCE CODE DATA: SOURCE CODE	INST'L CAPABILITY	MI-NIST'L CAPABILITY	RECOVERABILITY	SUPPORT EQUIPMENT	COGNIZANCE CODE	FEDERAL STOCK NUMBER DATA: FEDERAL STOCK NUMBER	MFG. CODE (TSMC)
	364 - 22										
2W17-716M	52 - 29	12		M		O					
	362										
2W17-8M	15	65		M		O					
	328										
2W17-816	69 - 22	4									
	113 - 16										
	117 - 6										
	362 - 21										
	362 - 34										
	362A										
	364 - 11										
	364 - 15										
	364 - 31										
	PG. 1007										
2W17-816M	119 - 36	1									
	119 - 36										
	362A										
2W17-916	362A	4		M		O					
2W17-916M		2									
2W18-10	5	2266		M		O					
	6										
	10 -140										
	11 - 14										
	13 -112										
	14										
	15										
	18 - 32										
	18 - 94										
	18 - 97										
2W18-10L	35	1000		M		O					
	37										
	39										
	42 - 7										
	42 - 35										
	42 - 43										
	42 - 53										
	42 - 61										
	42 - 67										
	42 - 70										
	264 - 71	4									
2W18-10M	5	2797		M		O			R	9535-230-7545	GH80
	6										
	9 - 12										
	12 - 9										
	12 - 39										
	12 - 53										
	12 - 58										
	13 - 56										
	13 -138										
	13 -148										
2W18-1016	19 - 19	15		M		O					
	84 - 86										
	141										
	154										
	355 -153										
	PG. 1017										
	PG. 1025										
2W18-1016L	2 - 13	2		M		O					
2W18-1016M	141	2		M		O					
	154										
	355 -151										
	PG. 1017										
	PG. 1025										
2W18-1032	89	4		M		O					
2W18-116	189 - 11	12									
2W18-12-24-64		7									
2W18-1216	90										
	93										
	2 - 7	33		M		O					
	19 - 21										
	66 - 15										
	136 -102										
	137 - 82										
	137 - 98										
	153 - 34										
	154 - 35										
	344 - 2										
	345 - 2										
2W18-1216M	100	10									
	122										
	123										
	125										
	343 - 2										
	345A- 2										
	346 - 2										
	347 - 2										
	358										
2W18-14		2									
2W18-1416	65 - 80	AR									
	91										
	23	32		M		O					
	68 - 59										
	69 - 2										
	122										
	125	1									
	126										
	127										
	223										
2W18-1416L	191 - 21	5		M		O					
	191 - 35										
	192 - 22										
2W18-1416M	65 - 81	AR									
	91 - 22										
	23	62		M		O					

PART NUMBER	FIGURE AND INDEX	TOTAL QTY.	MICRO-FILM NUMBER	MAINTENANCE CODE DATA: SOURCE CODE	INST'L CAPABILITY	MI-NIST'L CAPABILITY	RECOVERABILITY	SUPPORT EQUIPMENT	COGNIZANCE CODE	FEDERAL STOCK NUMBER DATA: FEDERAL STOCK NUMBER	MFG. CODE (TSMC)
2W18-146		1									
2W18-1616	2 - 15	4		M		O					
2W18-1616L	2 - 9	2		M		O					
2W18-1616M	113 - 20	4		M		O					
2W18-17-16-20		12									
2W18-1716	125	1									
	353	1		M		O					
2W18-1716M		2									
	125	2									
2W18-18		2									
2W18-1816	91 - 18	4		M		O					
2W18-2	95										
	97										
	71	8									
	355										
	358										
	PG. 1003										
	PG. 1018										
	PG. 1024										
2W18-2L	349	46		M		O					
	349	2									
2W18-3	3	16		M		O					
	9										
	71										
	357										
	PG. 1008										
2W18-3L	PG. 1007	4		M		O					
2W18-4	9 - 32	86									
	9 - 39										
	10										
	14										
	45 - 75										
	47 - 10										
	51 - 56										
	53 - 61										
	54 - 37										
	58 - 46										
2W18-4L	189 -107	238		M		O					
	189 -109										
	210										
	219 - 7										
	241 - 8										
	251 - 24										
	269	4									
	269A- 16	12									
	270 - 31										
	270 - 63										
2W18-4M		12									
2W18-41		13									
	101 - 21	8									
2W18-415	138 - 38	1									
2W18-416	6	2995		M		O					
	11 - 24										
	12 - 47										
	13										
	14										
	15										
	16 - 6										
	16 - 63										
	16 -133										
	16 -174										
2W18-416L	51 - 22	276		M		O					
	55										
	64										
	66 - 36										
	76 - 41										
	116 - 67										
	116 - 77										
	131 - 2										
	182 -167										
	183 -174										
2W18-416M	11 - 2	1387		M		O					
	12 - 20										
	12 - 30										
	12 - 48										
	12 - 50										
	12 - 75										
	12 - 82										
	13 -142										
	13 -152										
	16 - 50										
	96 - 16										
2W18-417	325 - 3	2									
2W18-418	86	4									
	100 -166										
2W18-428	215	4									
2W18-516	6	1278									
	11 - 20										
	12										
	13										
	14										
	15										
	16 - 90										
	18 - 72										
	18 - 84										
	18 - 87										
2W18-516L	57	28									
	61 - 28										
	116										
	118 - 28										
	234 - 34										
	235 - 34										
2W18-516M	11 - 21	238		M		O					
	12 - 12										
	13 - 50										

PART NUMBER	FIGURE AND INDEX	TOTAL QTY.	MICRO-FILM NUMBER	MAINTENANCE CODE DATA: SOURCE CODE	INSTL CAPABILITY	PRE-INSTL CAPABILITY	RECOVERABILITY	SUPPORT EQUIPMENT	FEDERAL STOCK NUMBER DATA: COGNIZANCE CODE	FEDERAL STOCK NUMBER	MFG. CODE (TSMC)
	16 - 36										
	16 - 38										
	16 - 93										
	16 -101										
	16 -104										
	31 - 13										
	52 - 22										
2W18-518M		2		M		O					
2W18-6	56 - 8	8									
	99										
	46	149		M		O					
	100										
	175										
	189 - 66										
	189 - 70										
	189 - 75										
	189 - 81										
	210										
	221 - 33										
	247	4									
	276	3									
2W18-6L	39	315		M		O					
	59 - 16										
	84 - 91										
	96 - 31										
	96 - 32										
	98 -100										
	98 -121										
	99 -134										
	99 -151										
	100 -169										
2W18-6M	124	8		M		O					
	126										
	127										
2W18-616	6	359		M		O					
	11 - 32										
	13										
	14										
	15										
	16 -153										
	17										
	19 - 88										
	19 - 91										
	19 - 93										
2W18-616L	295	2		M		O					
2W18-616M	12	103		M		O					
	16										
	36 - 15										
	47 - 55										
	47 - 56										
	75 - 60										
	89 - 43										
	91										
	116 - 42										
	176 - 34										
	334										
2W18-716	6	174		M		O					
	14										
	15										
	16 - 42										
	16 -147										
	24										
	45 - 24										
	45 -134										
	51 - 2										
	78 - 17										
2W18-716-8		8									
2W18-716M	45	54		M		O					
	85 - 10										
	85 - 12										
	123										
	138 - 3										
	143 - 9										
	143 - 13										
	164										
	176 - 59										
	183 -110										
2W18-8	6	144		M		O					
	10 -143										
	13 - 33										
	13 - 45										
	18										
	25 - 29										
	33 - 53										
	34										
	36 - 23										
	44										
2W18-8L	33 - 25	527		M		O					
	122	15									
	209 - 4										
	211										
	240 - 7										
	241 - 25										
	241 - 41	2									
	243 - 24										
	255 - 11										
2W18-8M	13 - 63	74									
	15										
	234										
	240 - 11										
	241 - 63	2									
	242 - 7										
	245										
	247										
	256										

PART NUMBER	FIGURE AND INDEX	TOTAL QTY.	MICRO-FILM NUMBER	MAINTENANCE CODE DATA: SOURCE CODE	INSTL CAPABILITY	PRE-INSTL CAPABILITY	RECOVERABILITY	SUPPORT EQUIPMENT	FEDERAL STOCK NUMBER DATA: COGNIZANCE CODE	FEDERAL STOCK NUMBER	MFG. CODE (TSMC)
	276 - 12	2									
	291										
	335	12									
2W18-816	13 - 60	42		M		O					
	13 -109										
	14										
	15										
	16 -150										
	16 -163										
	16 -166										
	83 - 68										
	89 - 35										
	182 -173										
2W18-816M	99 -100										
	89 - 34	6		M		O					
	100 -203										
	182 -175										
	183 -181										
	249										
2W18-818		14									
2W18-916	93	109		M		O					
	94										
	116 - 36										
	122 - 56										
	123 -114										
	124										
	125										
	126										
	127										
	136 -122										
	143										
2W18-916M	123	5		M		O			R	5310-290-6594	6190
	125	2									
	164										
	342 - 4										
	342 - 22										
	357										
2W18AL-14-14-16	285A	9									
2W18D10L	39	11		M		O					
2W18M		9		M		O					
2W18M916		2									
2W19-516		13									
2W2-21-24-62		4									
2W2AL25-28-063		6		M		O					
2W2B128-96-90	366 - 38	2									
2W2B17-16-62	71 - 56	2									
2W2B88-72-90	366 - 60	2									
2W2SD21-24-62		4									
2W2SP12-18-468	195 - 27	1									
2W2SP16-24-125	182 -170	2		M		O					
	183 -177										
2W2SP21-24-62	42 - 88	8		M		O					
2W2SP21-28-62	179 - 14	1		M		O					
2W2SP28-26-62		2		M		O					
2W2SP28-28-62	143	2									
2W2SP29-20-94	143 - 10	4		M		O					
2W2SP31-20-64	278 - 27	1									
2W2SP81-70-125		2		M		O					
2W2S20-20-.062		4		M		O					
2W2S20-20-032	52 - 37	2		M		O					
2W2S20-20-062	52 - 16	2									
2W2S20-20-064	52 - 36	2		M		O					
2W2S20-24-.032		4		M		O					
2W2S20-24-032	52 - 15	2									
2W21-3		12		M		O			R	5310-515-7499	6190
20-1663-001		1									
20-1663-002		1									
20-1666-001		1									
20P-103		1		P1	F	O	S				
20P-103-1	99 - 17	1							R	2915-532-7408	Y120
20P-103-11	99 - 17	1		P1	F	O	S		R	2915-532-7408	Y120
	100 - 12										
	101 - 16										
	103 - 9										
200		1									
200-1-1/8	PG. 1004	6									
200-2-62-606		4							R	4730-200-0326	GM80
200-316174	74 - 37	2									
200-31725		1									
200AC-5/16		5									
200AC10		1									
20000		4		P1					R	5930-506-1923	D334
200000-1	352 - 14	4		P1	F	O	R		R	4730-630-0312	Y120
	251 - 13	4									
	251 - 14										
	328 - 5										
200000-2	352 - 4	1		P1	F	O	R		R	4730-630-0313	Y120
	352A- 1										
200001	352A- 5	1									
	352A- 40	1									
200003	352A- 2	1									
200005	352A- 12	1									
200006	352A- 9	1									
	352A- 43	1									
200007	352A- 8	1									
	352A- 48	1									
200008	352A- 14	1									
	352A- 49	1									
200012	352A- 13	1									
	352A- 30	1									
	352A- 47	1									
200017	352A- 46	1									
200018	352A- 37	1									
20020-327	221 - 31	1									
20060-2	358	1									

PART NUMBER	FIGURE AND INDEX	TOTAL QTY.	MICRO-FILM NUMBER	MAINTENANCE CODE DATA: SOURCE CODE	INST'L CAPABILITY	PRI-INST'L CAPABILITY	RECOVERABILITY	SUPPORT EQUIPMENT	FEDERAL STOCK NUMBER DATA: COGNIZANCE CODE	FEDERAL STOCK NUMBER	MFG. CODE (TSMC)
20060-21	98 - 53	1									
	99 - 78										
	99 - 79										
	100 -180										
20060-4	98 - 53	1		P1					R	4730-209-7713	Y120
	98 - 54										
	99 - 78										
	99 - 79										
20060-41	99 - 78	1							R	4730-541-4100	Y120
	99 - 79										
	100 -181										
20062-21	98 - 54	1									
2010-2L	PG. 1004	2									
2010-2R	PG. 1004	2									
20162		1									
20162-21	98 - 53	1		P1	F	O	S		R	4730-541-4816	Y120
	98 - 54										
	99 - 78										
	99 - 79										
	100 -181										
20163		1									
20163-2	98 - 53	1		P1	F	O	S		R	4730-541-4815	Y120
	98 - 54										
	99 - 78										
	99 - 79										
	100 -182										
203-42032	355	1									
204	234	1							R	4730-278-5749	G250
	242										
	245										
	247										
	267										
	288										
	290										
	291										
	305										
	315										
									R	5905-518-7185	E222
										OR	
									R	5325-396-0087	G890
										OR	
									R	5940-502-2943	D336
										OR	
									R	5935-371-0525	V170
										OR	
204-AB	234	1									
	305										
204-AE	258	1									
	305										
204AB	235	1									
	288										
	306										
204AC	245	1		P1					R	6220-539-9853	D336
	288										
	315										
	318										
204AD	247	1		P1					R	6220-539-9852	D336
	315										
	318										
204AE	288	1		P1					R	6210-500-4004	D336
	306										
204AF	242	1		P1					R	6210-500-4005	D336
	315										
	318										
204AG	290										
	288	1		P1					R	6220-553-7390	D336
	315										
	318										
204AH	242	1		P1					R	6620-538-9318	D336
	315										
	318										
204AJ	288	1		P1					R	6220-553-7389	D336
	291										
	315										
204AK	267	1							R	6220-553-7388	D336
	288										
204AM	267	1									
	288										
	318										
205-3		1									
205-52705		1									
205AC-1/4	116 - 66	36							R	5330-202-3825	G890
	118 - 78										
	118 - 12										
	118 - 32										
205AC-10	116 - 58	128									
	118 - 20										
	118 - 38										
205AC-3/8		2							R	5330-239-8731	G890
205AC-7/16	116 - 43	2									
205702	242	1							R	6340-300-3617	D446
205703	242 - 17	1							R	6340-300-3618	D444
206-001A	198 - 25	1									
206-1520	351 - 10	1							R	1680-305-3522	X110
206-1675		3									
206-1680	350 - 18	1		P1	F	O	S		R	1680-099-5353	X110
206-1710	356 - 5	2		P1	F	O	C		R	1680-594-7385	X110
	PG. 1013										
206-2200- 1		1							R	1005-373-9715	B210
206-2200-0		1							R	1005-348-1161	B210
206-2200-0-01		1							R	1005-587-9249	B210
206-2201-1		1							R	1005-373-9715	B210
206-31413- 45		1									
206-31413- 46		1									
206AC-1/4		40									

PART NUMBER	FIGURE AND INDEX	TOTAL QTY.	MICRO-FILM NUMBER	MAINTENANCE CODE DATA: SOURCE CODE	INST'L CAPABILITY	PRI-INST'L CAPABILITY	RECOVERABILITY	SUPPORT EQUIPMENT	FEDERAL STOCK NUMBER DATA: COGNIZANCE CODE	FEDERAL STOCK NUMBER	MFG. CODE (TSMC)
206AC-10		2									
206AC1/4		1									
206959		129							R	6340-300-5425	D444
208-14013		1	DP 18								
208-171808		1									
208-18135- 2	10	1									
208-2		1									
208-25001		1									
208-33105		1	DP130								
208-48014		1	DS 8								
208-52031		1	DS 10								
208-54018		1		M		F					
208000	PG. 1012	1							R	4920-590-3787	S120
208428	242	1		P1	F	O	C		R	6340-589-1344	D446
208548		1									
209-014135- 25		1	BR 14								
209-014135- 27		1	BR 14	M		O					
209-014139- 1		1	BR 12	M		O					
209-00001		1	DN263								
209-00002		1	BU135	U							
209-00002-101		1	BU135	U							
209-00002-151		1	BU135	U							
209-00002-171		1	BU135	U							
209-00002-181		1	BU135	U							
209-00002-201		1	BU135	U							
209-00002-301		1	BU135	U							
209-00002-351		1	BU135	U							
209-00002-401		1	BU135	U							
209-00002-501		1	BU135	U							
209-00002-601		1	BU135	U							
209-00002-701		1	BU135	U							
209-00002-801		1	BU135	U							
209-00002-901		1	BU351	U							
209-00003		1	DN305								
209-00010		1	BX165	U							
209-00011		1	BX169	U							
209-00029		1	BM329	U							
209-00030		1	DN261	U							
209-10001		1	BM293	U							
209-10002- 10		1	DJ190	A		O					
209-10002- 20		1	DJ190	A		O					
209-10002- 30		1	DJ190	A		O					
209-10002- 40		1	DJ190	A		O					
209-10002- 50		1	DJ190	A		O					
209-10010	2 - 8	2	BV211	P	F	O	S		R	1500-C00-2264	ANAA
209-10011	2 - 12	1							R	5306-031-4806	ANAA
209-10017		2	BV245						R	5306-639-2773	G190
209-100180	23 - 15	1	CA273	M		O					
209-100190	23 - 17	1	CA274	M		O					
209-100200	23 - 62	1	CA275	M		O					
209-100210	23 - 60	1	CA276	M		O					
209-100220	23 - 27	1	BV207	M		O					
209-10023	23 - 59	1	BV206	M		O					
209-10024	23 - 18	4	BY 74	M		O					
209-10024- 3		4	BY 74	M		O					
209-10024- 5		4	BY 74	M		O					
209-10025		4	DJ 37	M		O					
	23 - 20	4									
209-100250- 3		4	BF436	M		O					
209-100250- 5		4	BF436	M		O					
209-10026		4	DJ 43	M		O					
	23 - 19	4									
209-100260- 3		4	BV247	M		O					
209-100260- 5		4	BV247	M		O					
209-10027- 1	10 - 71	1	BM290	M		O					
209-10027- 2	10	1	BM290	M		O					
209-10027- 3		1	BM290	M		O					
209-10027- 4		1	BM290	M		O					
209-10027- 5		1	BM290	M		O					
209-10027- 6		1	BM290	M		O					
209-10027- 7		2	BM290	M		O					
209-10027- 9		2	BM290	M		O					
209-10027- 11		2	BM290	M		O					
209-10027- 13		2	BM290	M		F					
209-10027- 15		2	BM290	M		F					
209-10027- 17		2	BM290	M		F					
209-10027- 19		2	BM290	M		F					
209-10027- 21		2	BM290	M		O					
209-10027- 23		1	BM290	M		O					
209-10027- 24		1	BM290	M		O					
209-10027- 31	10	1	BM290	M		O					
209-10027- 32	10	1	BM290	M		O					
209-10027- 41		1	BM290	M		O					
209-10027- 51		1	BM290	M		O					
209-10028- 1		1	BM285								
209-10028- 2		1	BM285								
209-10028- 3		1	BM285								
209-10028- 4		1	BM285								
209-10028- 5		1	BM285								
209-10028- 6		1	BM285								
209-10028- 7		1	BM285								
209-10028- 8		1	BM285								
209-10028- 9		2	BM285								
209-10028- 11		2	BM285								
209-10028- 31		1	BM285								
209-100290- 1		1	DA269	M		O					
209-100290- 2		1	DA269	M		O					
209-100290- 3		1	DA269	M		O					
209-100290- 4		1	DA269	M		O					
209-100290- 5		1	DA269	M		O					
209-100290- 6		1	DA269	M		O					
209-100290- 7		2	DA269	M		F					
209-100290- 9		2	DA269	M		F					
209-100290- 11		1	DA269	M		O					
209-100290- 12		1	DA269	M		O					

PART NUMBER	FIGURE AND INDEX	TOTAL QTY.	MICRO-FILM NUMBER	MAINTENANCE CODE DATA: SOURCE CODE	INSTL CAPABILITY	PRE-INSTL CAPABILITY	RECOVERABILITY	SUPPORT EQUIPMENT	COGNIZANCE CODE	FEDERAL STOCK NUMBER DATA: FEDERAL STOCK NUMBER	MFG. CODE (TSMC)
209-100290- 13		2	DA269	M		F					
209-100290- 15		1	DA269	M		O					
209-100290- 16		1	DA269	M		O					
209-100290- 17		2	DA269	M		O					
209-100290- 19		2	DA269	M		F					
209-100290- 21		1	DA269	M		O					
209-100290- 31		1	DA269	M		O					
209-10030		2	CD 65								
209-10030- 3	13 - 84	2	CD 65	M		F					
209-10031	13 - 22	2	CD 56	P	F	O	C		R	1560-570-2218	ANAA
209-10031- 3	13	2	CD 56	P	F	O	C		R	1560-570-2219	ANAA
209-10032- 3	13 - 23	4	BV264	M		F					
209-10032- 5	13 - 24	8	BV264	M		F					
209-10032- 7	13	4	BV264	M		F					
209-10032- 9	13	8	BV264	M		F					
209-10033- 1	16 -158	1	DG279	M		O					
209-10033- 2	16	1	DG279	M		O					
209-10033- 3		1	DG279	M		O					
209-10033- 4		1	DG279	M		O					
209-10033- 5		1	DG279	M		O					
209-10033- 6		1	DG279	M		O					
209-10033- 7		1	DG279	M		O					
209-10033- 8		1	DG279	M		O					
209-10033- 9		1	DG279	M		O					
209-10033- 10		1	DG279	M		O					
209-10033- 13		1	DG279	M		O					
209-10033- 14		1	DG279	M		O					
209-10033- 15		2	DG279	M		O					
209-10033- 17		2	DG279	M		O					
209-10033- 19		2	DG279	M		O					
209-10033- 21	16	1	DG279	M		O					
209-10033- 22	16	1	DG279	M		O					
209-10033- 23		1	DG279	M		O					
209-10033- 24		1	DG279	M		O					
209-10033- 25		1	DG279	M		O					
209-10033- 26		1	DG279	M		O					
209-10033- 27		1	DG279	M		O					
209-10033- 28		1	DG279	M		O					
209-10033- 29		1	DG279	M		O					
209-10033- 30		1	DG279	M		O					
209-10033- 31		1	DG279	M		O					
209-10033- 33		1	DG279	M		O					
209-10033- 34		1	DG279								
209-10033- 35		1	DG279	M		F					
209-10033- 41		1	DG279	M		O					
209-10034- 1	164 - 60	2	BV243								
	165 - 70										
209-10034- 3	165 - 68	2	BV243								
209-10035	164 - 57	2	BU253	P	F	O	C		R	1560-936-2717	ANAA
	165 - 67										
209-10036	164 - 59	4	BU255	M		F					
	165 - 69										
209-10038	23 - 58	2	BY159	M		O					
209-14001- 1		1	CK113	A		F					
209-14001- 2		1	CK113	A		F					
209-14001-101		1	CK113	A		F					
209-14001-102		1	CK113	A		F					
209-14001-201		1	CK113	A		F					
209-14001-202		1	CK113	A		F					
209-14001-301		1	CK113	A		F					
209-14001-302		1	CK113	A		F					
209-14002- 1	357	1	DN108	X1							
209-14002- 2	357	1	DN108	X1							
209-14002- 3		1	DN108	M		O					
209-14002-101	357	1	DN108	X1							
209-14002-102	357	1	DN108	X1							
209-14002-201	357	1	DN108	X1							
209-14002-202	357	1	DN108	X1							
209-14002-301	357	1	DN108	X1							
209-14002-302	357	1	DN108	X1							
209-140040- 1		1	BY 51	U							
209-140040- 2		1	BY 51	U							
209-14006	16 - 21	1	DH165								
209-14006- 3		2	DH165								
209-14006- 5		2	DH165								
209-14006- 7		2	DH165								
209-14006- 9		2	DH165	M		O					
209-14006- 11		2	DH165	M		O					
209-14006- 13		2	DH165	M		O					
209-14006- 15		2	DH165	M		O					
209-14006- 17		2	DH165	M		O					
209-14006- 19		2	DH165	M		O					
209-14006-101	17	1	DH165	A		O					
209-14006-102	17	1	DH165	A		O					
209-14006-201	17	1	DH165	A		O					
209-14006-202	17	1	DH165	A		O					
209-14008- 1		1	BM278	U							
209-14008- 2		1	BM278	U							
209-14008- 3	22 - 3	1	BM278	M		O					
209-14008- 4	22	1	BM278	M		O					
209-14010- 1		2	BG 33	U							
209-14010- 2		2	BG 33	U							
209-14010- 3		1	BG 33	M		O					
209-14010- 4		1	BG 33	M		O					
209-14013- 1		1	BM282	U							
209-14013- 2		1	BM282	U							
209-14013- 19		1	BM282	M		O					
209-14013- 20		1	BM282	M		O					
209-14013- 21		1	BM282	M		O					
209-14013- 22		1	BM282	M		O					
209-14013- 23		1	BM282	M		O					
209-14013- 24		1	BM282	M		O					
209-14013- 25		1	BM282	M		O					
209-14013- 26		1	BM282	M		O					
209-14013- 27		1	BM282	M		O					
209-14013- 28		1	BM282	M		O					
209-140130- 1		1	BN139	U							
209-140130- 2		1	BN139	U							
209-140130- 3	14 - 6	1	BN139								
209-140130- 4	14	1	BN139								
209-140130- 5	14 - 19	1	BN139	M		O					
209-140130- 6	14	1	BN139	M		O					
209-140130- 7	14 - 26	1	BN139	M		O					
209-140130- 8	14	1	BN139	M		O					
209-140130- 9	14 - 23	2	BN139	M		O					
209-140130- 10	14	1	BN139	M		O					
209-140130- 11	14 - 27	1	BN139	M		O					
209-140130- 12	14	1	BN139	M		O					
209-140130- 13	14 - 38	1	BN139	M		O					
209-140130- 14	14	1	BN139	M		O					
209-140130- 15	14 - 39	1	BN139	M		O					
209-140130- 16	14	1	BN139	M		O					
209-140130- 17	14 - 41	1	BN139	M		O					
209-140130- 18	14	1	BN139	M		O					
209-140130- 19	14 - 80	1	BN139	M		O					
209-140130- 20	14	1	BN139	M		O					
209-140130- 21	14 - 79	1	BN139	M		O					
209-140130- 22	14	1	BN139	M		O					
209-140130- 23	14 - 81	1	BN139	M		O					
209-140130- 24	14	1	BN139	M		O					
209-140130- 25	14 -200	1	BN139	M		O					
209-140130- 26	14	1	BN139	M		O					
209-14014- 1		1	BM312	U							
209-14014- 2		1	BM312	U							
209-14014- 3		2	BM312	M		O					
209-14014- 7		2	BM312	M		O					
209-14014- 19		1	BM312	M		O					
209-14014- 20		1	BM312	M		O					
209-14014- 21		1	BM312	M		O					
209-14014- 22		1	BM312	M		O					
209-14014- 23		1	BM312	M		O					
209-14014- 24		1	BM312	M		O					
209-14014- 25		1	BM312	M		O					
209-14014- 26		1	BM312	M		O					
209-14014- 27		1	BM312	M		O					
209-14014- 28		1	BM312	M		O					
209-14014- 29		1	BM312	M		O					
209-14014- 30		1	BM312	M		O					
209-14014- 31		1	BM312	M		O					
209-14014- 32		1	BM312	M		O					
209-140140- 1		1	BN 98	U							
209-140140- 2		1	BN 98	U							
209-140140- 7	15 - 24	1	BN 98	M		O					
	15 - 55										
209-140140- 8	15	1	BN 98	M		O					
209-140140- 11	15 - 11	1	BN 98	M		O					
	15 - 42										
209-140140- 12	15	1	BN 98	M		O					
209-140140- 19	15 - 47	1	BN 98	M		O					
209-140140- 20	15	1	BN 98	M		O					
209-140140- 21	15 - 40	1	BN 98	M		O					
209-140140- 22	15	1	BN 98	M		O					
209-140140- 23	15 - 39	1	BN 98	M		O					
209-140140- 24	15	1	BN 98	M		O					
209-140140- 25	15 - 19	1	BN 98	M		O					
	15 - 50										
209-140140- 26	15	1	BN 98	M		O					
209-140140- 27	15 - 22	1	BN 98	M		O					
	15 - 53										
209-140140- 28	15	1	BN 98	M		O					
209-140140- 29	15 - 5	1	BN 98	M		O					
209-140140- 30	15	1	BN 98	M		O					
209-140140- 31	15 - 8	1	BN 98	M		O					
209-140140- 32	15	1	BN 98	M		O					
209-140140- 33	15 - 9	1	BN 98	M		O					
209-140140- 34	15	1	BN 98	M		O					
209-140140- 35	15 - 29	1	BN 98	M		O					
209-140140- 36	15	1	BN 98	M		O					
209-140140- 37	15 - 17	2	BN 98	M		O					
209-140140- 39	15 - 15	2	BN 98	M		O					
209-140140- 41	15 - 33	1	BN 98	M		O					
209-140140- 42	15	1	BN 98	M		O					
209-140140- 43	15 - 31	1	BN 98	M		O					
209-140140- 44	15	1	BN 98	M		O					
209-140140- 45	15 - 16	1	BN 98	M		O					
209-140140- 46	15	1	BN 98	M		O					
209-140140- 47	15 - 69	1	BN 98	M		O					
209-140140- 48	15	1	BN 98	M		O					
209-140140- 49	15 - 75	1	BN 98	M		O					
209-140140- 50	15	1	BN 98	M		O					
209-140140- 51	15 -116	1	BN 98	M		O					
209-140140- 52	15 -148	1	BN 98	M		O					
209-140140- 53	15	1	BN 98	M		O					
209-140140- 54		1	BN 98	M		O					
209-14015	23 - 16	1	BM315								
209-14015- 1	14 - 1	1	BM315	X2							
209-14015- 2	14	1	BM315	X2							
209-140150	23	1	CP 37								
209-140150- 1	14	1	CP 37	X2							
209-140150- 2	14	1	CP 37	X2							
209-140150- 3	14	1	CP 37	P2		O	R				
209-140150- 4	14	1	CP 37	P2		O	R				
209-14016	23 - 61	1	DK 44								
209-14016- 1	15 - 1	1	DK 44	X2							
209-14016- 2	15	1	DK 44	X2							
209-140160	23	1	BU118								
209-140160- 1	15	1	BU118	X2							
209-140160- 2	15	1	BU118	X2							
209-140160- 11	15	1	BU118	P2		O	C				
209-140160- 12	15	1	BU118	P2		O	C				

PART NUMBER	FIGURE AND INDEX	TOTAL QTY.	MICRO-FILM NUMBER	MAINTENANCE CODE DATA: SOURCE CODE	INSTL CAPABILITY	PRE-INSTL CAPABILITY	RECOVERABILITY	SUPPORT EQUIPMENT	FEDERAL STOCK NUMBER DATA: COGNIZANCE CODE	FEDERAL STOCK NUMBER	MFG. CODE (TSMC)
209-140160- 13		1	BU118	X2							
209-140160- 14		1	BU118	X2							
209-140160- 15	15	1	BU118	X2							
209-140160- 16	15	1	BU118	X2							
209-14019- 1	357	1	BM308	X1							
209-14019- 2	357	1	BM308	X1							
209-14020- 1	18 -139 357	1	DD121	P	F	O	C		R	1560-511-1488	ANAA
209-14020- 2	18 357	1	DD121	P	F	O	C		R	1560-511-1514	ANAA
209-14020- 3	18 357	1	DD121	M		O					
209-14020- 4	18 357	1	DD121	M		O					
209-14021- 1	18 -132 357	1	BF 74	M		O					
209-14021- 2	18 357	1	BF 74	M		O					
209-14022- 1	10 -127	1	BU 28	P		O	S		R	1500-C00-2265	ANAA
209-14022- 2	10	1	BU 28	P		O	S		R	5340-031-4808	ANAA
209-14022- 3		1	BU 28	M		O					
209-14022- 4		1	BU 28	M		O					
209-14022- 5		2	BU 28	M		O					
209-14022- 9		1	BU 28	M		O					
209-14022- 10		1	BU 28	M		O					
209-14022- 11		1	BU 28								
209-14022- 21	10 -199 357	1	BU 28	P	F	O	S		R	1560-570-2220	ANAA
209-14022- 22	10 357	1	BU 28	P	F	O	S		R	1560-544-8440	ANAA
209-14023	10	1									
209-14023- 9		2	CP129	M		O					
209-14024- 1	18 -102	1	DJ271	M		O					
209-14024- 2	18	1	DJ271	M		O					
209-14025	2 - 1	2	BH391	P	F	O	S		R	1560-037-2524	ANAA
209-14026- 1		1	DE229	U							
209-14026- 2		1	DE229	U							
209-14026- 3	22 - 1	1	DE229	M		O					
209-14026- 4	22	1	DE229	M		O					
209-14027- 1		2	CV134	U							
209-14027- 2		1	CV134	U							
209-14027- 3	22 - 2	1	CV134	M		O					
209-14027- 4	22	1	CV134	M		O					
209-14028- 1		1	CL308	M		O					
209-14028- 2		1	CL308	M		O					
209-14029- 1		1	CA 35	M		O					
209-14029- 2		1	CA 35	M		O					
209-14030		1	DL 13								
209-14030- 1	15	1	DL 13	P2		O	C				
209-14030- 2	15	1	DL 13	P2		O	C				
209-14030- 3		1	DL 13	X2							
209-14030- 4		1	DL 13	X2							
209-14031	10	2	DB234	M		O					
209-14032- 3	10 -137	1	DB289	P1	F	O	C		R	1560-511-1519	ANAA
209-14032- 4	10	1	DB289	P1	F	O	C		R	1560-511-1523	ANAA
209-14032- 5	10 -134	1	DB289	P1	F	O	C		R	1560-511-1538	ANAA
209-14032- 6	10	1	DB289	P1	F	O	C		R	1560-511-1545	ANAA
209-14033- 1	10 -132	1	DB107	A		O					
209-14033- 2	10	1	DB107	A		O					
209-14033- 3		1	DB107	M		O					
209-14033- 4		1	DB107	M		O					
209-14033- 5		2	DB107	M		O					
209-14033- 7		2	DB107	M		F					
209-14033- 9		2	DB107	M		F					
209-14033- 11		1	DB107	M		O					
209-14033- 12		1	DB107	M		O					
209-14033- 13		1	DB107	M		F					
209-14033- 14		1	DB107	M		F					
209-14033- 15		2	DB107	M		F					
209-14033- 21		1	DB107	M		O					
209-14033- 31		1	DB107	M		O					
209-14033- 32		1	DB107	M		O					
209-14034- 1	357	1	DG155	M		O					
209-14034- 2	357	1	DC155	M		O					
209-14035- 1		1	DC156	M		O					
209-14035- 2		1	DC156	M		O					
209-14036- 1	10 -126	1	DB 20	M		O					
209-14036- 2	10	1	DB 20	M		O					
209-14037- 1	357	1	DB 23	X1							
209-14037- 2	357	1	DB 23	X1							
209-14038		1	DB 28								
209-14038- 1	10 18 -106	1	DB 28								
209-14038- 2	10 18	1	DB 28	U							
209-14038- 3		2	DB 28	M		F					
209-14038- 5		2	DB 28	M		F					
209-14038- 7		2	DB 28	M		O					
209-14038- 9	357	1	DB 28	M		O					
209-14038- 10	357	1	DB 28	M		O					
209-14038- 11	10 -136	2	DB 28	M		F					
209-14038- 21	18 -115 357	2	DB 28	U							
209-14038- 22	357	1	DB 28								
209-14038- 31	10 -125 357	1	DB 28								
209-14038- 32	10 357	1	DB 28								
209-14039	10 -135	2	DB335	P	F	O	C		R	1560-550-8027	ANAA
209-14051- 1	16 -159	1	CB 68	X2							
209-14051- 2	16	1	CB 68	X2							
209-14051- 5		1	CB 68	X1							
209-14051- 6		1	CB 68	X1							
209-14051- 7		2	CB 68	M		O					
209-14051- 9		2	CB 68	M		O					
209-14051- 11		2	CB 68	M		O					
209-14051- 12		2	CB 68								
209-14051- 13		1	CB 68	M		O					
209-14051- 14		1	CB 68	X1							
209-14051- 18		1	CB 68	X1							
209-14051- 21	16	1	CB 68	X2							
209-14051- 22	16	1	CB 68	X2							
209-14051- 31		2	CB 68	M		O					
209-14051- 42	16	1	CB 68	X2							
209-14052- 11		1	CG260	X1							
209-14052- 12		1	CG260	X1							
209-14052- 21	16 -142	1	CG260	X2							
209-14052- 22	16	1	CG260	X2							
209-14053- 3		1	BM316	-X	1						
209-14053- 4		1	BM316	X1							
209-14053- 11	16 -137	1	BM316	X2							
209-14053- 12	16	1	BM316	X2							
209-14058- 1		1	BM307	U							
209-14058- 2		1	BM307	U							
209-14060- 1		1	BM287	M		O					
209-14060- 2		1	BM287	M		O					
209-14060- 3		1	BM287	M		O					
209-14060- 4		1	BM287	M		O					
209-14060- 5		1	BM287	M		O					
209-14060- 6		1	BM287	M		O					
209-14060- 7		1	BM287	M		O					
209-14060- 8		1	BM287	M		O					
209-14064- 1		1	CN 76	M		O					
209-14064- 2		1	CN 76	M		O					
209-14064- 3		1	CN 76	M		O					
209-14064- 4		1	CN 76	M		O					
209-14064- 5		1	CN 76	M		O					
209-14064- 6		1	CN 76	M		O					
209-14064- 7		1	CN 76	M		O					
209-14064- 8		1	CN 76	M		O					
209-14064- 9		1	CN 76	M		O					
209-14064- 10		1	CN 76	M		O					
209-14064- 11		1	CN 76	M		O					
209-14064- 12		1	CN 76	M		O					
209-14064- 13		1	CN 76	M		O					
209-14064- 15		1	CN 76	M		O					
209-14064- 17		1	CN 76	M		O					
209-14064- 18		1	CN 76	M		O					
209-14064- 21		1	CN 76	M		O					
209-14064- 22		1	CN 76	M		O					
209-14064- 31		1	CN 76	M		O					
209-14064- 32		1	CN 76	M		O					
209-14065- 1		1	BM298	M		O					
209-14065- 2		1	BM298	M		O					
209-14065- 3		1	BM298	M		O					
209-14065- 4		1	BM298	M		O					
209-14065- 5		1	BM298	M		O					
209-14065- 6		1	BM298	M		O					
209-14065- 7		1	BM298	M		O					
209-14065- 8		1	BM298	M		O					
209-14065- 9		1	BM298	M		O					
209-14065- 10		1	BM298	M		O					
209-14065- 11		1	BM298	M		O					
209-14065- 12		1	BM298	M		O					
209-14068- 3		2	DP286	X1							
209-14068- 4		1	DP286	X1							
209-14068- 11	16 -111	1	DP286	X2							
209-14068- 12	16	1	DP286	X2							
209-14068- 21	16	1	DP286	X2							
209-14068- 22	16	1	DP286	X2							
209-14070- 3	16 -109	1	BU134	X2							
209-14070- 4	16	1	BU134	X2							
209-14071- 1		1	DJ268	M		O					
209-14071- 2		1	DJ268	M		O					
209-14071- 3		1	DJ268	M		O					
209-14071- 4		1	DJ268	M		O					
209-14071- 5		1	DJ268	M		O					
209-14071- 6		1	DJ268	M		O					
209-14071- 7		1	DJ268	M		O					
209-14071- 8		1	DJ268	M		O					
209-14071- 9		1	DJ268	M		O					
209-14071- 10		1	DJ268	M		O					
209-14071- 11		1	DJ268	M		O					
209-14071- 12		1	DJ268	M		O					
209-14071- 21		1	DJ268	M		O					
209-14071- 22		1	DJ268	M		O					
209-14072- 1		1	BM305	M		O					
209-14072- 2		1	BM305	M		O					
209-14072- 3		1	BM305	M		O					
209-14072- 4		1	BM305	M		O					
209-14072- 5		1	BM305	M		O					
209-14072- 6		1	BM305	M		O					
209-14072- 7		1	BM305	M		O					
209-14072- 8		1	BM305	M		O					
209-14072- 9		1	BM305	M		O					
209-14072- 10		1	BM305	M		O					
209-14073- 1		1	BM286	M		O					
209-14073- 2		1	BM286	M		O					
209-14073- 3		1	BM286	M		O					
209-14073- 4		1	BM286	M		O					
209-14073- 5		1	BM286	M		O					
209-14073- 6		1	BM286	M		O					
209-14073- 7		1	BM286	M		O					
209-14073- 8		1	BM286	M		O					
209-14073- 9		1	BM286	M		O					
209-14073- 10		1	BM286	M		O					
209-14073- 11		1	BM286	M		O					
209-14073- 12		1	BM286	M		O					
209-14074- 1		1	BM291	M		O					
209-14074- 2		1	BM291	M		O					

PART NUMBER	FIGURE AND INDEX	TOTAL QTY.	MICRO-FILM NUMBER	MAINTENANCE CODE DATA: SOURCE CODE	INSTL CAPABILITY	PRE-INSTL CAPABILITY	RECOVERABILITY	SUPPORT EQUIPMENT	FEDERAL STOCK NUMBER DATA: COGNIZANCE CODE	FEDERAL STOCK NUMBER	MFG. CODE (FSMC)
209-14074- 3		1	BM291	M		0					
209-14074- 4		1	BM291	M		0					
209-14074- 5		1	BM291	M		0					
209-14074- 6		1	BM291	M		0					
209-14074- 7		1	BM291	M		0					
209-14074- 8		1	BM291	M		0					
209-14074- 9		1	BM291	M		0					
209-14074- 10		1	BM291	M		0					
209-14075- 1		1	BM322	M		0					
209-14075- 2		1	BM322	M		0					
209-14075- 3		1	BM322	M		0					
209-14075- 4		1	BM322	M		0					
209-14075- 5		1	BM322	M		0					
209-14075- 6		1	BM322	M		0					
209-14075- 7		1	BM322	M		0					
209-14075- 8		1	BM322	M		0					
209-14075- 9		1	BM322	M		0					
209-14075- 10		1	BM322	M		0					
209-14075- 11		1	BM322	M		0					
209-14075- 12		1	BM322	M		0					
209-14075- 21		1	BM322	M		0					
209-14076- 1		1	BM297	M		0					
209-14076- 2		1	BM297	M		0					
209-14076- 3		1	BM297	M		0					
209-14076- 4		1	BM297	M		0					
209-14076- 5		1	BM297	M		0					
209-14076- 6		1	BM297	M		0					
209-14076- 7		1	BM297	M		0					
209-14076- 8		1	BM297	M		0					
209-14076- 9		1	BM297	M		0					
209-14076- 10		1	BM297	M		0					
209-14077- 1		1	BM327	M		0					
209-14077- 2		1	BM327	M		0					
209-14077- 3		1	BM327	M		0					
209-14077- 4		1	BM327	M		0					
209-14077- 5		1	BM327	M		0					
209-14077- 6		1	BM327	M		0					
209-14077- 7		1	BM327	M		0					
209-14077- 8		1	BM327	M		0					
209-14077- 9		1	BM327	M		0					
209-14077- 10		1	BM327	M		0					
209-14077- 11		1	BM327	M		0					
209-14077- 12		1	BM327	M		0					
209-14078- 1		1	BM317	M		0					
209-14078- 2		1	BM317	M		0					
209-14078- 3		1	BM317	M		0					
209-14078- 4		1	BM317	M		0					
209-14078- 5		1	BM317	M		0					
209-14078- 6		1	BM317	M		0					
209-14078- 7		1	BM317	M		0					
209-14078- 8		1	BM317	M		0					
209-14078- 9		2	BM317	M		0					
209-14078- 11		1	BM317	M		0					
209-14078- 12		1	BM317	M		0					
209-14078- 22		1	BM317	M		0					
209-14079- 3	16 - 32	1	BM318	X2							
209-14079- 4	16	1	BM318	X2							
209-14080- 1		1	BM326	M		0					
209-14080- 2		1	BM326	M		0					
209-14080- 3		1	BM326	M		0					
209-14080- 4		1	BM326	M		0					
209-14080- 5		1	BM326	M		0					
209-14080- 6		1	BM326	M		0					
209-14080- 7		1	BM326	M		0					
209-14080- 8		1	BM326	M		0					
209-14080- 9		1	BM326	M		0					
209-14080- 10		1	BM326	M		0					
209-14080- 11		1	BM326	M		0					
209-14080- 12		1	BM326	M		0					
209-14081- 1		1	BM328	M		0					
209-14081- 2		1	BM328	M		0					
209-14081- 3		1	BM328	M		0					
209-14081- 4		1	BM328	M		0					
209-14081- 5		1	BM328	M		0					
209-14081- 6		1	BM328	M		0					
209-14081- 7		1	BM328	M		0					
209-14081- 8		1	BM328	M		0					
209-14081- 9		1	BM328	M		0					
209-14081- 10		1	BM328	M		0					
209-14081- 11		1	BM328	M		0					
209-14081- 12		1	BM328	M		0					
209-14082- 1		1	BM325	M		0					
209-14082- 2		1	BM325	M		0					
209-14082- 3		1	BM325	M		0					
209-14082- 4		1	BM325	M		0					
209-14082- 5		1	BM325	M		0					
209-14082- 6		1	BM325	M		0					
209-14082- 7		1	BM325	M		0					
209-14082- 8		1	BM325	M		0					
209-14082- 9		1	BM325	M		0					
209-14082- 10		1	BM325	M		0					
209-14082- 11		1	BM325	M		0					
209-14082- 12		1	BM325	M		0					
209-14083- 1		1	BM323	M		0					
209-14083- 2		1	BM323	M		0					
209-14083- 3		1	BM323	M		0					
209-14083- 4		1	BM323	M		0					
209-14083- 5		1	BM323	M		0					
209-14083- 6		1	BM323	M		0					
209-14083- 7		1	BM323	M		0					
209-14083- 8		1	BM323	M		0					
209-14083- 9		1	BM323	M		0					
209-14083- 10		1	BM323	M		0					
209-14083- 11		1	BM323	M		0					
209-14083- 12		1	BM323	M		0					
209-14083- 21		1	BM323	M		0					
209-14083- 22		1	BM323	M		0					
209-14084- 3	16 - 22	1	BM319	X2							
209-14084- 4	16	1	BM319	X2							
209-14085- 1		1	BP 13	M		0					
209-14085- 2		1	BP 13	M		0					
209-14085- 3		1	BP 13	M		0					
209-14085- 4		1	BP 13	M		0					
209-14085- 5		1	BP 13	M		0					
209-14085- 6		1	BP 13	M		0					
209-14085- 11		1	BP 13	M		0					
209-14085- 12		1	BP 13	M		0					
209-14086- 1		1	CB 80	M		0					
209-14086- 2		1	CB 80	M		0					
209-14086- 3		1	CB 80	M		0					
209-14086- 4		1	CB 80	M		0					
209-14086- 5		1	CB 80	M		0					
209-14086- 6		1	CB 80	M		0					
209-14086- 7		1	CB 80	M		0					
209-14086- 8		1	CB 80	M		0					
209-14086- 9		1	CB 80	M		0					
209-14086- 10		1	CB 80	M		0					
209-14086- 11		1	CB 80	M		0					
209-14086- 12		1	CB 80	M		0					
209-14088- 3		1	BY246	X1							
209-14088- 4		1	BY246	X1							
209-14088- 11	13 - 80	1	BY246	P1	0	0	S		R	1560-031-4809	ANAA
209-14088- 12	13	1	BY246	P1	0	0	S		R	1560-031-4810	ANAA
209-140880- 1	13	1	BN173	P1	0	0	S		R	1560-333-7870	ANAA
209-140880- 2	13	1	BN173	P1	0	0	S		R	1560-333-7871	ANAA
209-140880- 3		1	BN173	X1							
209-140880- 4		1	BN173	X1							
209-14090- 21		5	CU282	X2							
209-14090- 22		5	CU282	X2							
209-14090- 23		4	CU282	X2							
209-14090- 24		4	CU282	X2							
209-14090- 25		3	CU282	X2							
209-14090- 26		3	CU282	X2							
209-14090- 27		2	CU282	X2							
209-14090- 28		2	CU282	X2							
209-14090- 29		3	CU282	X2							
209-14090- 30		3	CU282	X2							
209-14090- 31		3	CU282	X2							
209-14090- 32		3	CU282	X2							
209-14090- 33		3	CU282	X2							
209-14090- 34		3	CU282	X2							
209-14090- 35		3	CU282	X2							
209-14090- 36		3	CU282	X2							
209-14090- 37		1	CU282	X2							
209-14090- 38		1	CU282	X2							
209-14090- 39		1	CU282	X2							
209-14090- 40		1	CU282	X2							
209-14090- 41		1	CU282	X2							
209-14090- 42		1	CU282	X2							
209-14090- 43		1	CU282	X2							
209-14090- 44		1	CU282	X2							
209-14090- 45		1	CU282	X2							
209-14090- 46		1	CU282	X2							
209-14090- 47		1	CU282	X2							
209-14090- 48		1	CU282	X2							
209-14091- 3	13 - 83	3	BP 50	P	F	0	C		R	1560-516-5959	ANAA
209-14091- 5	13 - 16 13 - 82	7	BP 50	P	F	0	C		R	1560-516-5962	ANAA
209-14091- 7	13 - 15	4	BP 50	P	F	0	C		R	1560-516-5964	ANAA
209-14091- 9	193 - 69	1	BP 50	P	F	0	C		R	1560-544-8441	ANAA
209-14092- 1		1	BN181	U							
209-14092- 2		1	BN181	U							
209-14094- 1		1	DJ189	U							
209-14094- 2		1	DJ189	U							
209-14095- 1		1	BP 4	U							
209-14095- 2		1	BP 4	U							
209-14096- 1		1	BP 7	U							
209-14096- 2		1	BP 7	U							
209-14097- 1		1	BS212	U							
209-14097- 2		1	BS212	U							
209-14098- 3	13 - 88	2	BD 1	M		0					
209-14098- 5	13 - 14	2	BD 1	M		0					
209-14098- 7	13 - 17	2	BD 1	M		0					
209-14098- 9	13 - 81	2	BD 1	M		0					
209-14100- 3		2	BN228	X2							
209-14101- 1	16 - 47	1	CB 65	P2		0	C				
209-14101- 2	16	1	CB 65	P2		0	C				
209-14101- 3		1	CB 65	X1							
209-14101- 4		1	CB 65	X1							
209-14101- 5		1	CB 65	X1							
209-14101- 6		1	CB 65	X1							
209-14101- 21	16	1	CB 65	P2		0	C				
209-14101- 22	16	1	CB 65	P2		0	C				
209-14102- 5		1	BU191	X1							
209-14102- 6		1	BU191	X1							
209-14102- 7		1	BU191	X1							
209-14102- 8		1	BU191	X1							
209-14102- 9		1	BU191	X1							
209-14102- 10		1	BU191	X1							
209-14102- 51	17 - 1	1	BU191	P2		0	C				
209-14102- 52	17	1	BU191	P2		0	C				
209-14102-101	17	1	BU191	P2		0	C				
209-14102-102	17	1	BU191	P2		0	C				
209-14103- 1	16 - 46	1	DJ275	X2							
209-14103- 2	16	1	DJ275	X2							
209-14103- 3		1	DJ275	X1							
209-14103- 4		1	DJ275	X1							
209-14103- 5		2	DJ275	X1							
209-14103- 9		1	DJ275	X1							
209-14103- 10		1	DJ275	X1							

PART NUMBER	FIGURE AND INDEX	TOTAL QTY.	MICRO-FILM NUMBER	MAINTENANCE CODE DATA: SOURCE CODE	INSTL CAPABILITY	PRE-INSTL CAPABILITY	RECOVERABILITY	SUPPORT EQUIPMENT	FEDERAL STOCK NUMBER DATA: COGNIZANCE CODE	FEDERAL STOCK NUMBER	MFG. CODE (TSMC)
209-14103- 11		1	DJ275	X1							
209-14103- 12		1	DJ275	X1							
209-14103- 15		2	DJ275	X1							
209-14103- 19		1	DJ275	X1							
209-14103- 20		1	DJ275	X1							
209-14103- 21	16	1	DJ275	X2							
209-14103- 22	16	1	DJ275	X2							
209-14103- 31	16	1	DJ275	M		0					
209-14103- 32	16	1	DJ275	M		0					
209-14104- 1	16 - 33	1	CB 72	X2							
209-14104- 2	16	1	CB 72	X2							
209-14104- 3		1	CB 72	X1							
209-14104- 4		1	CB 72	X1							
209-14104- 5		2	CB 72	X1							
209-14104- 7		1	CB 72	X1							
209-14104- 8		1	CB 72	X1							
209-14104- 11		1	CB 72	X1							
209-14104- 12		1	CB 72	X1							
209-14104- 13		1	CB 72	X1							
209-14104- 14		1	CB 72	X1							
209-14104- 21	16	1	CB 72	X2							
209-14104- 22	16	1	CB 72	X2							
209-14104- 31		1	CB 72	X1							
209-14104- 32		1	CB 72	X1							
209-14105- 1		1	DK177	X2							
209-14105- 2		1	DK177	X2							
209-14105- 3		1	DK177	M		0					
209-14105- 4		1	DK177	M		0					
209-14105- 5		1	DK177	X1							
209-14105- 6		1	DK177	X1							
209-14105- 7		2	DK177	M		0					
209-14105- 9		2	DK177	M		0					
209-14106- 1		1	BN211	X2							
209-14106- 2		1	BN211	X2							
209-14106- 3		1	BN211	M		0					
209-14106- 4		1	BN211	M		0					
209-14106- 5		1	BN211	X1							
209-14106- 6		1	BN211	X1							
209-14106- 7		2	BP211	M		0					
209-14106- 9		2	BP211	M		0					
209-14106- 11		1	BP211	M		0					
209-14106- 12		1	BP211	M		0					
209-14106- 13		1	BP211	M		0					
209-14106- 14		1	BP211	M		0					
209-14106- 15		2	BP211	M		0					
209-14106- 17		2	BP211	M		0					
209-14106- 19		2	BP211	M		0					
209-14106- 21		2	BP211	M		0					
209-14106- 23		1	BP211	M		0					
209-14106- 25		1	BP211	M		0					
209-141070- 1		1	BN230	M		0					
209-141070- 2		1	BN230	M		0					
209-141070- 3		1	BN230	M		0					
209-141070- 4		1	BN230	M		0					
209-141070- 5		2	BN230	M		0					
209-141070- 7		2	BN230	M		0					
209-141070- 9		1	BN230	M		0					
209-141070- 10		1	BN230	M		0					
209-141070- 11		1	BN230	M		0					
209-141070- 12		1	BN230	M		0					
209-14108- 1		1	BN226	X2							
209-14108- 2		1	BN226	X2							
209-14108- 3		1	BN226	M		0					
209-14108- 4		1	BN226	M		0					
209-14108- 5		1	BN226	X1							
209-14108- 6		1	BN226	X1							
209-14108- 7		2	BN226	M		0					
209-14108- 9		2	BN226	M		0					
209-14108- 11		1	BN226	M		0					
209-14108- 12		1	BN226	M		0					
209-14108- 13		1	BN226	M		0					
209-14108- 14		1	BN226	M		0					
209-14108- 15		2	BN226	M		0					
209-14108- 17		2	BN226	M		0					
209-14108- 19		2	BN226	M		0					
209-14108- 21		2	BN226	M		0					
209-14108- 23		2	BN226	M		0					
209-14108- 25		2	BN226	M		0					
209-14109- 1		1	BN182	X2							
209-14109- 2		1	BN182	X2							
209-14109- 3		1	BN182	MO		0					
209-14109- 4		1	BN182	M		0					
209-14109- 5		1	BN182	X1							
209-14109- 6		1	BN182	X1							
209-14109- 7		2	BN182	M		0					
209-14109- 9		2	BN182	M		0					
209-14110- 1		1	CM299	M		0					
209-14110- 2		1	CM299	X2							
209-14110- 3		1	CM299	X1							
209-14110- 4		1	CM299	X1							
209-14110- 5		1	CM299	X1							
209-14110- 6		1	CM299	X1							
209-14110- 7		1	CM299	X1							
209-14110- 8		1	CM299	X1							
209-14110- 9		2	CM299	M		0					
209-14110- 23	16 -138	2	CM299	M		0					
209-14110- 25	16 -139	2	CM299	M		0					
209-14110- 27		4	CM299	M		0					
209-14110- 29		4	CM299	M		0					
209-14110- 31		1	CM299	X2							
209-14110- 32		1	CM299	X2							
209-14111- 1		1	BP 15	X2							
209-14111- 2		1	BP 15	X2							
209-14111- 3		1	BP 15	M		0					
209-14111- 4		1	BP 15	M		0					
209-14111- 7		2	BP 15	M		0					
209-14111- 9		2	BP 15	M		0					
209-14111- 13		1	BP 15	X1							
209-14111- 14		1	BP 15	X1							
209-141130- 3	16	1	BN178	P1	0	0	S		R	1560-031-4811	ANAA
209-141130- 4	16	1	BN178	P1	0	0	S		R	1560-031-4812	ANAA
209-141130- 5	16	1	BN178	P1	F	0	S		R	1560-693-8714	ANAA
209-141130- 6	16	1	BN178	P1	0	0	S		R	1560-693-8715	ANAA
209-141130- 11	16 -140	1	BN178	A		0					
209-141130- 12	16	1	BN178	A		0					
209-141130- 21	16	1	BN178	A		0					
209-141130- 22	16	1	BN178	A		0					
209-14114- 1		1	BN225	U							
209-14114- 2		1	BN225	U							
209-14115- 1		1	BN220	U							
209-14115- 2		1	BN220	U							
209-14116- 1		1	BN216	U							
209-14116- 2		1	BN216	U							
209-14117- 1	9 - 6	1	BN175	A		0					
209-14117- 2	9	1	BN175	A		0					
209-14117- 3	9 - 9	1	BN175	M		0					
209-14117- 4	9	1	BN175	M		0					
209-14117- 5		2	BN175	M		0					
209-14118- 1		1	BN219	U							
209-14118- 2		1	BN219	U							
209-14119- 1		1	BN223	U							
209-14119- 2		1	BN223	U							
209-14120- 1		2	CB 53	M		0					
209-14120- 3		2	CB 53	M		0					
209-14120- 5		2	CB 53	M		0					
209-14120- 7		2	CB 53	M		0					
209-14120- 9		2	CB 53	M		0					
209-14120- 11		2	CB 53	M		0					
209-14120- 21		2	CB 53	M		0					
209-14120- 31		2	CB 53	M		0					
209-14121- 1		2	BM396	M		0					
209-14121- 3		2	BM396	M		0					
209-14121- 5		2	BM396	M		0					
209-14121- 7		2	BM396	M		0					
209-14121- 9		2	BM396	M		0					
209-14121- 11		2	BM396	M		0					
209-14121- 13		2	BM396	M		0					
209-14121- 15		2	BM396	M		0					
209-14121- 17		2	BM396	M		0					
209-14121- 21		2	BM396	M		0					
209-14121- 31		2	BM396	M		0					
209-14121- 41		2	BM396	M		0					
209-14121- 51	16 - 55	2	BM396	M		0					
209-14121- 61	16 - 54	2	BM396	M		0					
209-14121- 71		2	BM396	M		0					
209-14121- 81		2	BM396	M		0					
209-14122- 3		2	BM397	M		0					
209-14122- 5		2	BM397	M		0					
209-14122- 7		2	BM397	M		0					
209-14122- 9		2	BM397	M		0					
209-14122- 11		2	BM397	M		0					
209-14122- 13		2	BM397	M		0					
209-14123		2	CB 32	M		0					
209-14125		2	BM398	M		0					
209-14125- 3		2	BM398	M		0					
209-14126	9 - 19	4	BD 2	P	F	0	C		R	1560-550-8031	ANAA
209-14127- 3		2	BM399	M		0					
209-14127- 5		2	BM399	M		0					
209-14127- 7		2	BM399	M		0					
209-14127- 9		2	BM399	M		0					
209-14127- 11		2	BM399	M		0					
209-14127- 13		2	BM399	M		0					
209-14127- 15		2	BM399	M		0					
209-14128- 3		2	CV 87	M		0					
209-14128- 5		2	CV 87	M		0					
209-14128- 7		2	CV 87	M		0					
209-14128- 9		2	CV 87	M		0					
209-14128- 11		2	CV 87	M		0					
209-14128- 13		2	CV 87	M		0					
209-14128- 15		2	CV 87	M		0					
209-14128- 17		2	CV 87	M		0					
209-14128- 18		1	CV 87	M		0					
209-14129		2	BM401	M		0					
209-14130		2	BD 3	M		0					
209-14131- 3		2	BP 1	X2							
209-14133- 3		1	CB 33	M		0					
209-14133- 4		1	CB 33	M		0					
209-14133- 5		1	CB 33	M		0					
209-14133- 6		1	CB 33	M		0					
209-14133- 7		1	CB 33	M		0					
209-14133- 8		1	CB 33	M		0					
209-14134- 3		1	BM403	M		0					
209-14134- 4		1	BM403	M		0					
209-14134- 5		1	BM403	M		0					
209-14134- 6		1	BM403	M		0					
209-14134- 7		1	BM403	M		0					
209-14134- 8		1	BM403	M		0					
209-14135		4	BD 4	M		0					
209-14136	164 - 56 165 - 65	2	BQ 22	P	F	0	S		R	1560-037-2525	ANAA
209-14136- 3		2	BQ 22	M		0					
209-14137	14 -201 15 -187	30	BY265	M		0					
209-14139	24 - 4	4	BF777	P	0	0	C		R	1560-529-9005	ANAA
209-14144		2	BD 5	M		0					
209-14145- 5		2	CP 61	M		0					
209-14146- 1		1	BF 78	M		0					
209-14146- 2		1	BF 78	M		0					
209-14147		2	DD168	M		0					
209-14148- 1	9 - 15	1	CA227	P1	0	0	S		R	1560-031-4815	ANAA

PART NUMBER	FIGURE AND INDEX	TOTAL QTY.	MICRO-FILM NUMBER	MAINTENANCE CODE DATA: SOURCE CODE	INSTL CAPABILITY	PRE-INSTL CAPABILITY	RECOVERABILITY	SUPPORT EQUIPMENT	COGNIZANCE CODE	FEDERAL STOCK NUMBER DATA: FEDERAL STOCK NUMBER	MFG. CODE (TSMC)
209-14148- 2	9	1	CA227	P1	0	0	S		R	1560-031-4816	ANAA
209-14149- 1	9 - 10	1	BH407	P1	0	0	S		R	1560-031-4817	ANAA
209-14149- 2	9	1	BH407	P1	0	0	S		R	1560-031-4818	ANAA
209-14150	9 - 18	1	DG144	M		0					
209-14151	9 - 17	2	BH408	M		0					
209-14152- 1	18 -117 357	1	BP 6	M		0					
209-14152- 2	18 357	1	BP 6	M		0					
209-14152- 3		1	BP 6	M		0					
209-14152- 4		1	BP 6	M		0					
209-14152- 5		1	BP 6	M		0					
209-14152- 6		1	BP 6	M		0					
209-14152- 7		1	BP 6	M		0					
209-14152- 8		1	BP 6	M		0					
209-14152- 9		1	BP 6	M		F					
209-14152- 10		1	BP 6	M		F					
209-14152- 11		2	BP 6	M		F					
209-14152- 13		1	BP 6	M		0					
209-14152- 14		1	BP 6	M		0					
209-14152- 15		1	BP 6	M		0					
209-14152- 16		1	BP 6	M		0					
209-14152- 17		1	BP 6	M		F					
209-14152- 18		1	BP 6	M		F					
209-14152- 19		1	BP 6	M		F					
209-14152- 21		1	BP 6	M		0					
209-14152- 22		1	BP 6	M		0					
209-14152- 23		1	BP 6	M		0					
209-14152- 24		1	BP 6	M		0					
209-14152- 25		1	BP 6	M		F					
209-14152- 26		1	BP 6	M		F					
209-14152- 27		2	BP 6	M		F					
209-14152- 29		1	BP 6	M		0					
209-14152- 30		1	BP 6	M		0					
209-14152- 31		1	BP 6	M		0					
209-14152- 32		1	BP 6	M		0					
209-14152- 33		1	BP 6	M		F					
209-14152- 34		1	BP 6	M		F					
209-14152- 35		2	BP 6	M		F					
209-14152- 41	18 -114 357	1	BP 6	M		0					
209-14152- 42	18 357	1	BP 6	M		0					
209-14152- 51	18 -116 357	1	BP 6	M		0					
209-14152- 52	18 357	1	BP 6	M		0					
209-14153- 1		1	BF 80								
209-14153- 3	18 -118 357	1	BF 80	M		0					
209-14153- 4	18 357	1	BF 80	M		0					
209-14156- 3		1	BD 8	M		0					
209-14156- 4		1	BD 8	M		0					
209-14162- 3	14 -163	38	BF 81	M		0					
209-14162- 5	14 -164	2	BF 81	M		0					
209-14163- 1	10 -128	1	CP128								
209-14163- 2	10	1	CP128								
209-14163- 3	10 -131 357	1	CP128	M		0					
209-14163- 4	10 357	1	CP128	M		0					
209-14164- 1		1	BN184	M		0					
209-14164- 2		1	BN184	M		0					
209-14164- 3		1	BN184	M		0					
209-14164- 4		1	BN184	M		0					
209-14164- 5		1	BN184	M		0					
209-14164- 6		1	BN184	M		0					
209-14164- 7		1	BN184	M		0					
209-14164- 8		1	BN184	M		0					
209-14164- 9		1	BN184	M		0					
209-14164- 10		1	BN184	M		0					
209-14164- 11		1	BN184	M		0					
209-14164- 12		1	BN184	M		0					
209-14166- 1		1	BN215	M		0					
209-14166- 2		1	BN215	M		0					
209-14166- 3		1	BN215	M		0					
209-14166- 4		1	BN215	M		0					
209-14166- 5		1	BN215	M		0					
209-14166- 6		1	BN215	M		0					
209-14166- 7		1	BN215	M		0					
209-14166- 8		1	BN215	M		0					
209-14166- 9		1	BN215	M		0					
209-14166- 10		1	BN215	M		0					
209-14166- 11		1	BN215	M		0					
209-14166- 12		1	BN215	M		0					
209-14166- 13		1	BN215	M		0					
209-14166- 14		1	BN215	M		0					
209-14166- 15		2	BN215	M		0					
209-14166- 21		1	BN215	M		0					
209-14166- 22		1	BN215	M		0					
209-14167- 1		1	BN213	U							
209-14167- 2		1	BN213	U							
209-14168- 1		1	BN218	M		0					
209-14168- 2		1	BN218	M		0					
209-14168- 3		1	BN218	M		0					
209-14168- 4		1	BN218	M		0					
209-14168- 5		1	BN218	M		0					
209-14168- 6		1	BN218	M		0					
209-14168- 7		1	BN218	M		0					
209-14168- 8		1	BN218	M		0					
209-14168- 9		1	BN218	M		0					
209-14168- 10		1	BN218	M		0					
209-14168- 11		1	BN218	M		0					
209-14168- 12		1	BN218	M		0					

PART NUMBER	FIGURE AND INDEX	TOTAL QTY.	MICRO-FILM NUMBER	MAINTENANCE CODE DATA: SOURCE CODE	INSTL CAPABILITY	PRE-INSTL CAPABILITY	RECOVERABILITY	SUPPORT EQUIPMENT	COGNIZANCE CODE	FEDERAL STOCK NUMBER DATA: FEDERAL STOCK NUMBER	MFG. CODE (TSMC)
209-14168- 21		1	BN218	M		0					
209-14168- 22		1	BN218	M		0					
209-14169- 1		1	BN210	U							
209-14169- 2		1	BN210	U							
209-14170- 9	16 17	2	BF 83	M		0					
209-14171- 3		454	BF 84								
209-14171- 5		216	BF 84								
209-14171- 7		90	BF 84								
209-14172	14	13	BF 85	M		0					
209-14173- 1		1	BN234	U							
209-14173- 2		1	BN234	U							
209-14174- 1		1	BN232	M		0					
209-14174- 2		1	BN232	M		0					
209-14174- 3		1	BN232	M		0					
209-14174- 4		1	BN232	M		0					
209-14174- 5		1	BN232	M		0					
209-14174- 6		1	BN232	M		0					
209-14174- 7		1	BN232	M		0					
209-14174- 8		1	BN232	M		0					
209-14174- 9		1	BN232	M		0					
209-14174- 10		1	BN232	M		0					
209-14174- 11		1	BN232	M		0					
209-14174- 12		1	BN232	M		0					
209-14175- 3	16 -110	1	BN180	X2							
209-14175- 4	16	1	BN180	X2							
209-14176- 1	357	1	BF 86	M		0					
209-14176- 2	357	1	BF 86	M		0					
209-14176- 3		1	BF 86	M		0					
209-14176- 4		1	BF 86	M		0					
209-14176- 5		2	BF 86	M		0					
209-14177	16	2	BO 10	M		0					
209-14178		2	BF 87	M		0					
209-14179	10 - 40 11 - 45	1	BH409								
209-14179- 3	10 - 51	1	BH409	X1							
209-14179- 4	10	1	BH409	X1							
209-14179- 5	11 - 45	1	BH409	P1	F	0	C		R	1560-031-4819	ANAA
209-14179- 6	11	1	BH409	P1	F	0	C		R	1560-031-4820	ANAA
209-14180- 1		1	BH410	P1	F	0	S		R	1560-341-4642	ANAA
209-14180- 2		1	BH410	P1	F	0	S		R	1560-341-4643	ANAA
209-14180- 3		2	BH410	M		F					
209-14180- 5	10	1	BH410								
209-14180- 11	10 - 41	1	BH410	P1		0	S		R	1560-602-0770	ANAA
209-14180- 12	10	1	BH410						R	1560-602-0771	ANAA
209-14181- 1		1	BH411	M		0					
209-14181- 2		1	BH411	M		0					
209-14182- 1	10 - 7	1	BH412	M		F					
209-14182- 2	10	1	BH412	M		F					
209-14182- 3		1	BH412	M		F					
209-14182- 4		1	BH412	M		F					
209-14182- 5		1	BH412	M		0					
209-14183- 1	9 - 1	1	BH413	P	F	0	C		R	1560-511-1654	ANAA
209-14183- 2	9 - 2	1	BH413	P	F	0	C		R	1560-544-8442	ANAA
209-14183- 3		1	BH413	M		0					
209-14183- 4		1	BH413	M		0					
209-14183- 5		2	BH413	M		0					
209-14184- 1	10 - 1	1	BH414	P	F	0	C		R	1560-570-2221	ANAA
209-14184- 2	10	1	BH414	P	F	0	C		R	1560-570-2222	ANAA
209-14184- 3		1	BH414	M		F					
209-14184- 4		1	BH414	M		F					
209-14185- 1		1	CD 32	M		0					
209-14185- 2		1	CD 32	M		0					
209-14185- 3		1	CD 32	M		0					
209-14185- 4		1	CD 32	M		0					
209-14185- 5		1	CD 32	M		0					
209-14185- 6		1	CD 32	M		0					
209-14185- 7		1	CD 32	M		0					
209-14185- 8		1	CD 32	M		0					
209-14185- 9		1	CD 32	M		0					
209-14185- 10		1	CD 32	M		0					
209-14185- 11		1	CD 32	M		0					
209-14185- 12		1	CD 32	M		0					
209-14185- 13		1	CD 32	M		0					
209-14185- 14		1	CD 32	M		0					
209-141860- 1		1	BH416	M		0					
209-141860- 2		1	BH416	M		0					
209-141870- 1		1	BH418	M		0					
209-141870- 2		1	BH418	M		0					
209-141880- 1		1	BH420	M		0					
209-141880- 2		1	BH420	M		0					
209-141890- 1		1	BH422	M		0					
209-141890- 2		1	BH422	M		0					
209-14194- 1		1	BH429	X1							
209-14194- 2		1	BH429	X1							
209-14195- 3	16 - 87	1	BN231	X2							
209-14195- 4	16	1	BN231	X2							
209-14196- 1	16 - 58	1	BP 11	A		0					
209-14196- 2	16	1	BP 11	A		0					
209-14196- 5	16 - 85	1	BP 11	X2							
209-14196- 6	16	1	BP 11	X2							
209-14196- 7	16 - 86	2	BP 11	M		0					
209-14196- 9	16	1	BP 11	M		0					
209-14196- 11	16	1	BP 11	A		0					
209-14196- 12	16	1	BP 11	A		0					
209-14196- 13	16	1									
209-14196- 14	16	1									
209-14197		2	BF 90	M		0					
209-14198- 1	14 - 74 15 -118	4	BF 91	P1	F	0	C		R	5305-551-6389	ANAA
209-14198- 2		1	BF 91								
209-14198- 3	14 - 76	2	BF 91	P1	F	0	C		R	5306-550-4397	ANAA
209-14199- 3	180 -174	1	BH424	P1	F	0	S		R	1560-031-4821	ANAA
209-14199- 4	180	1	BH424	P1	F	0	S		R	1560-031-4822	ANAA
209-14200- 5	180 -180	1	BH425	P1	F	0	S		R	1560-031-4823	ANAA

PART NUMBER	FIGURE AND INDEX	TOTAL QTY.	MICRO-FILM NUMBER	MAINTENANCE CODE DATA: SOURCE CODE	INSTL CAPABILITY	PRE-INSTL CAPABILITY	RECOVERABILITY	SUPPORT EQUIPMENT	FEDERAL STOCK NUMBER DATA: COGNIZANCE CODE	FEDERAL STOCK NUMBER	MFG. CODE (TSMC)
209-14200- 4	180	1	BH425	P1	F	0	S		R	1560-031-4824	ANAA
209-142010- 3	16 -193	1	BP 2	X2							
209-142010- 4	16	1	BP 2	X2							
209-142011	23 - 56	2	CY 56	M		0					
209-142020- 3		1	BN176	X1							
209-142020- 4		1	BN176	X1							
209-14203- 1	16 -195	1	CA197	X1							
209-14203- 2	16	1	CA197	X1							
209-142040- 3		1	BN174	X1							
209-142040- 4		1	BN174	X1							
209-142040- 11	16 -192	1	BN174	P1	D	0	S		P	1560-031-4825	ANAA
209-142040- 12	16	1	BN174	P1	D	0	S		R	1560-031-4826	ANAA
209-14205- 3	16 -194	1	BN221	X2							
209-14205- 4	16	1	BN221	X2							
209-142060- 3		1	BN212	X1							
209-142060- 4		1	BN212	X1							
209-142060- 11	2 - 18	1	BN212	P1	D	0	S		R	1560-031-4827	ANAA
209-142060- 12	2	1	BN212	P1	D	0	S		R	1560-031-4828	ANAA
209-14207- 3	15 - 46	2	BH426	M		0					
209-14207- 4	15	2	BH426	M		0					
209-14207- 5	15 - 48	2	BH426	M		0					
209-14207- 6	15	2	BH426	M		0					
209-14208- 3	14 - 11	1	BH427	M		0					
209-14208- 4	14	1	BH427	M		0					
209-14208- 5	14 - 32	1	BH427	M		0					
209-14208- 6	14	1	BH427	M		0					
209-142100		1	DA222	M		0					
209-142100- 11		1	DA222	M		0					
209-14211- 3	16	2	BF 92	P	F	0	C		R	1560-570-2223	ANAA
209-14211- 5	16 -191	1	BF 92	P	F	0	C		R	1560-570-7416	ANAA
	182										
	183										
209-14212	15 -207	5		M		0					
209-14215- 3		1	BP 14	X1							
209-14215- 4		1	BP 14	X1							
209-14215- 11	13 - 48	1	BP 14	P1	F	0	S		R	1560-333-7872	ANAA
209-14215- 12	13	1	BP 14	P1	F	0	S		R	1560-333-7873	ANAA
209-14216- 1	13 - 53	2	BS142	M		0					
209-14216- 2	13	2	BS142	M		0					
209-14218- 3		1	BS 50	X1							
209-14218- 4		1	BS 50	X1							
209-14218- 11	16	1	BS 50	P1					R	1560-333-7874	ANAA
209-14218- 12	16	1	BS 50	P1	D	0	S		R	1560-333-7875	ANAA
209-14219	13 - 89	1	BX109	P1	F	0	S		R	1560-544-8444	ANAA
209-14219- 3		1	BX109	X1							
209-14220- 1		1	BP206	M		0					
209-14220- 2		1	BP206	M		0					
209-14221	13	2	DR115	P1	F	0	S		R	1560-544-8445	ANAA
209-14222	13 -114	2	BF 97	M		0					
209-14223	13 -128	4	BY 76	M		0					
209-14224- 3	13 -129	12	BF 99	M		F					
209-14224- 5	13 -130	4	BF 99	M		F					
209-14224- 7	13 -131	4	BF 99	M		F					
209-14224- 9	13 -132	4	BF997	M		F					
209-14225- 3	13 -115	6	BF100	M		F					
209-14225- 5	13 -116	4	BF100	M		F					
209-14225- 7	13 -117	6	BF100	M		F					
209-14225- 9	13 -118	2	BF100	M		F					
209-14225- 11	13 -119	2	BF100	M		F					
209-14226- 1	10 -124	1	BS 58	U							
	18 -106										
209-14226- 2	10	1	BS 58	U							
	18										
209-14227	16 -134	2	BF101	M		0					
	357										
209-14228- 1	357	1	BH431	M		0					
209-14229- 1	18 -133	1	BF102	M		0					
	357										
209-14229- 2	18	1	BF102	M		0					
	357										
209-14230- 1	10 -122	1	BP 10	X1							
	357										
209-14230- 2	10	1	BP 10	X1							
	357										
209-14231- 1	357	1	BF103	M		0					
209-14231- 2	357	1	BF103	M		0					
209-14232	357	2	CP127	M		0					
209-14233- 1	357	2	CP130	M		0					
209-14233- 2	357	1									
209-14233- 3		2	CP130	M		0					
209-14233- 5		4	CP130	M		0					
209-14234- 1	10	1	CP 60								
209-14234- 2	10	1	CP 60								
209-14234- 3	10 -130	1	CP 60	P	F	0	C		P	1560-544-8442	ANAA
	357										
209-14234- 4	10	1	CP 60	P	F	0	C		P	1560-544-8471	ANAA
	357										
209-14235- 3	16 - 25	1	BN224	X1							
209-14235- 4	16	1	BN224	X1							
209-14235- 5	16	1	BN224								
209-14235- 6	16	1	BN224								
209-14235- 11	16 - 23	1	BN224	P1	D	0	S		R	1560-031-4829	ANAA
209-14235- 12	16	1	BN224	P1	D	0	S		R	1560-031-4830	ANAA
209-14235- 21	16	1	BN224						R	1560-574-7995	ANAA
209-14235- 22	16	1	BN224	X2					R	1560-574-7996	ANAA
209-14237- 3		2	BH433	X2							
209-14238	2 - 2	2	BF106	M		0					
209-14239- 1		1	BS143	M		0					
209-14239- 2		1	BS143	M		0					
209-14240- 1	10 - 11	1	BS144	M		0					
209-14240- 2	10	1	BS144	M		0					
209-14240- 11	10	1	BS144	M		0					
209-14240- 12	10	1	BS144	M		0					
209-14243- 1		1	BF109	M		0					
209-14243- 2		1	BF109	M		0					

PART NUMBER	FIGURE AND INDEX	TOTAL QTY.	MICRO-FILM NUMBER	MAINTENANCE CODE DATA: SOURCE CODE	INSTL CAPABILITY	PRE-INSTL CAPABILITY	RECOVERABILITY	SUPPORT EQUIPMENT	FEDERAL STOCK NUMBER DATA: COGNIZANCE CODE	FEDERAL STOCK NUMBER	MFG. CODE (TSMC)
209-14244- 3		1	BH434	M		0					
209-14244- 4		1	BH434	M		0					
209-14245- 1		1	BY129	M		0					
209-14245- 2		1	BY129	M		0					
209-14246- 1		1	BH435	M		0					
209-14246- 2		1	BH435	M		0					
209-14247- 1	10 - 13	1	BH436	M		0					
209-14247- 2	10	1	BH436	M		0					
209-14248- 1	13 - 78	1	BP 5	M		0					
209-14248- 2	13	1	BP 5	M		0					
209-14248- 3		1	BP 5	M		0					
209-14248- 4		1	BP 5	M		0					
209-14248- 5		1	BP 5	M		0					
209-14248- 6		1	BP 5	M		0					
209-14248- 7		2	BP 5	M		0					
209-14248- 9		2	BP 5	M		F					
209-14248- 11		2	BP 5	M		F					
209-14249	13 - 96	2	BF111	M		0					
209-14249- 3		2	BF111	M		0					
209-14249- 5		2	BF111	M		0					
209-14249- 7		2	BF111	M		F					
209-14250	13 - 97	2	BH437	M		0					
209-14250- 3		2	BH437	M		0					
209-14250- 5		2	BH437	M		0					
209-14250- 7		2	BH437	M		F					
209-14251- 1	13 - 99	1	BF112	M		0					
209-14251- 2	13	1	BF112	M		0					
209-14251- 3		1	BF112	M		0					
209-14251- 4		1	BF112	M		0					
209-14251- 5		2	BF112	M		0					
209-14251- 7		2	BF112	M		0					
209-14252	13 - 98	1	BF113								
209-14252- 1		1	BF113	M		0					
209-14252- 2		1	BF113	M		0					
209-14252- 3		1	BF113	M		0					
209-14252- 4		1	BF113	M		0					
209-14252- 5		1	BF113	M		0					
209-14252- 6		1	BF113	M		0					
209-14252- 7		2	BF113	M		F					
209-14253- 1		1	BH438	M		0					
209-14253- 2		1	BH438	M		0					
209-14257		2	CJ257	M		0					
209-14258- 3		2	BF114	M		F					
209-14258- 5		2	BF114	M		F					
209-14258- 7		2	BF114	M		F					
209-14258- 9		2	BF114	M		F					
209-14259		2	CK115	M		0					
209-14260- 3	15	3	BD 13	M		0					
209-14261- 3	14 -212	2	BF115	P	D	0	C		R	5310-550-4257	ANAA
209-14261- 5	14 -208	28	BF115	P	D	0	C		R	5310-550-4258	ANAA
	15										
	16 -179										
	16 -182										
	16 -186										
	16 -189										
	316 - 81										
209-14262		2	BF116	M		0					
209-14263- 1		1	BF170	M		0					
209-14263- 2		1	BF170	M		0					
209-14264		2	BF118	M		0					
209-14267		1	BF119	M		F					
209-14267- 1	10 - 52	1	BF119								
209-14267- 3		1	BF119	M		F					
209-14268		1	BV197	M		0					
209-14268- 5		1	BF197								
209-14269- 3	15 -127	38	BF121	M		0					
209-14269- 5	15 -146	2	BF121	M		0					
209-14270- 1		1	BH440	M		0					
209-14270- 3		1	BH440	M		0					
209-14273		2	BD 14	M		0					
209-14276- 1		1	CN 65	M		0					
209-14276- 2		1	CN 65	M		0					
209-14276- 3		1	CN 65	M		0					
209-14276- 4		1	CN 65	M		0					
209-14276- 5		1	CN 65	M		0					
209-14276- 6		1	CN 65	M		0					
209-14276- 7		1	CN 65	M		0					
209-14276- 8		1	CN 65	M		0					
209-14276- 9		1	CN 65	M		0					
209-14276- 10		1	CN 65	M		0					
209-14276- 13		2	CN 65	M		0					
209-14276- 15		2	CN 65	M		0					
209-14276- 16		1	CN 65	M		0					
209-14276- 25		2	CN 65	M		0					
209-14276- 27		1	CN 65	M		0					
209-14276- 29		1	CN 65	M		0					
209-14276- 33		1	CN 65	M		0					
209-14276- 34		1	CN 65	M		0					
209-14276- 35		1	CN 65	M		0					
209-14276- 36		1	CN 65	M		0					
209-14276- 37		1	CN 65	M		0					
209-14276- 38		1	CN 65	M		0					
209-14277- 1		1	CN 67	U							
209-14277- 2		1	CN 67	U							
209-14278	24 -101	2	CB 24	M		0					
209-14279	24 -103	2	CA294	M		0					
209-14280- 5		1	DB252	M		0					
209-14280- 6		1	DB252	M		0					
209-14280- 11		1	DB252	M		0					
209-14280- 12		1	DB252	M		0					
209-14281- 5		2	DH224	M		0					
209-14281- 11		2	DH224	M		0					
209-14282	16	4	DN276	M		0					
209-14283	16	2	DN277	M		0					
209-14283- 3		1	DN277	M		0					

PART NUMBER	FIGURE AND INDEX	TOTAL QTY.	MICRO-FILM NUMBER	MAINTENANCE CODE DATA: SOURCE CODE	INSTL CAPABILITY	PRE-INSTL CAPABILITY	RECOVERABILITY	SUPPORT EQUIPMENT	COGNIZANCE CODE	FEDERAL STOCK NUMBER DATA: FEDERAL STOCK NUMBER	MFG. CODE (TSMC)
209-14284		1	DN280								
209-14284- 3	16	2	DN280	M		0					
209-14284- 5	16	4	DN280	M		0					
209-14285	13 -107	2	DR 86	A		F					
209-14285- 3		2	DR 86	M		F					
209-14285- 21		1	DR 86	M		F					
209-14285- 22		1	DR 86	M		F					
209-14303- 3		1	BN146	X1							
209-14303- 4		1	BN146	X1							
209-14303- 11	16 -143	1	BN146	P1					R	1560-031-4831	ANAA
209-14303- 12	16	1	BN146	P1	0	0	S		R	1560-031-4832	ANAA
209-14304- 3		1	BN160	X1							
209-14304- 4		1	BN160	X1							
209-14304- 11	16 -161	1	BN160	P1	F	0	S		R	1560-031-4833	ANAA
209-14304- 12	16	1	BN160	P1	F	0	S		R	1560-031-4834	ANAA
209-14305- 1		1									
209-14305- 2		1									
209-14305- 3	16 - 44	1	BN144	X1							
209-14305- 4	16	1	BN144	X1							
209-14305- 11	16 - 34	1	BN144	P2	0	0	S		R	1560-570-2224	ANAA
209-14305- 12	16	1	BN144	P2	0	0	S		R	1560-570-2225	ANAA
209-14306- 3		1							R	1560-031-4835	ANAA
209-14307- 3		1	DP246	X1							
209-14307- 4		1	DP246	X1							
209-14307- 5		1	DP246	X1							
209-14307- 6		1	DP246	X1							
209-14307- 11	21 - 26	1	DP246	P1	0	0	S		R	1560-031-4837	ANAA
209-14307- 12	21	1	DP246	P1	0	0	S		R	1560-031-4838	ANAA
209-14307- 21	21 -136	1	DP246	P1		0	S		R	1560-574-6067	ANAA
209-14307- 22	21	1	DP246	P1		0	S		R	1560-574-6066	ANAA
209-14309- 1	16 -204	1	BF122	M		0					
209-14309- 2	16	1	BF122	M		0					
209-14311- 1	2 - 5	1	BH442	M		0					
209-14311- 2	2	1	BH442	M		0					
209-14311- 3		1	BH442	M		0					
209-14311- 4		1	BH442	M		0					
209-14312- 3	2 - 4	1	BN149	P1	F	0	S		R	1560-031-4839	ANAA
209-14312- 4	2	1	BN149	P1	F	0	S		R	1560-031-4840	ANAA
209-14313		2	BF124	M		0					
209-14314- 1	16	1	BY 75	M		0					
209-14314- 2	16	1	BY 75	M		0					
209-14315- 3		1	CB 75	X1							
209-14315- 4		1	CB 75	X1							
209-14315- 11	16 -141	1	CB 75	P1	0	0	S		R	1560-031-4841	ANAA
209-14315- 12	16	1	CB 75	P1	0	0	S		R	1560-031-4842	ANAA
209-14315- 21	16	1	CB 75	P1	0	0	S		R	1560-570-2226	ANAA
209-14315- 22	16	1	CB 75	P1	0	0	S		R	1560-570-2227	ANAA
209-14316- 1		1	DL 15	U							
209-14316- 2		1	DL 15	U							
209-14316- 3	24	1	DL 15	M		0					
209-14316- 4	24	1	DL 15	M		0					
209-14316- 5	24	1	DL 15	M		0					
209-14316- 6	24	1	DL 15	M		0					
209-14316- 7	24	1	DL 15	M		0					
209-14316- 8	24	1	DL 15	M		0					
209-14316- 9	24	1	DL 15	M		0					
209-14316- 10	24	1	DL 15	M		0					
209-14316- 11	24	1	DL 15	M		0					
209-14316- 12	24	1	DL 15	M		0					
209-14316- 13	24	1	DL 15	M		0					
209-14316- 14	24	1	DL 15	M		0					
209-14316- 15	24	1	DL 15	M		0					
209-14316- 16	24	1	DL 15	M		0					
209-14316- 51		1	DL 15	U							
209-14316- 52		1	DL 15	U							
209-14317		4	CB 54	M		0					
209-14317- 3		4	CB 54	M		0					
209-14318- 1		1	DR143								
209-14318- 2	24	1	DR143								
209-14318- 3		1	DR143	X1							
209-14318- 4		1	DR143	X1							
209-14318- 9	24	1	DR143								
209-14318- 10	24	1	DR143								
209-14318- 11	24 - 1	1	DR143	P1	0	0	S		R	1560-031-4843	ANAA
209-14318- 12	24 - 1	1	DR143	P1	0	0	S		R	1560-031-4844	ANAA
209-14318- 51	24 - 2	1	DR143	P1	0	0	S		R	1560-305-4120	ANAA
209-14318- 52	24	1	DR143	P1	0	0	S		R	1560-305-4121	ANAA
209-14318- 53		1	DR143	X1							
209-14318- 54		1	DR143	X1							
209-14318-101	24 - 3	1	DR143	P1	0	0	S		R	1560-338-1001	ANAA
209-14318-102	24	1	DR143	P1	0	0	S		R	1560-338-1002	ANAA
209-14318-103		1	DR143	X1							
209-14318-104		1	DR143	X1							
209-14319		1	BF126								
209-14320		2	BF127								
209-14321	24 - 5	4	BF128	M		0					
209-14322- 3	13 - 29 13 - 75	4	BF129	P	F	0	C		R	5340-531-7860	ANAA
209-14322- 5	13 - 41 13 -105	4	BF129	P	F	0	C		R	5340-531-7861	ANAA
209-14322- 7	13 - 30 13 - 40 13 - 76	6	BF129	P	F	0	C		R	5340-531-7862	ANAA
209-14322- 9	13 -104	2	BF129	P	F	0	C		R	5340-531-7862	ANAA
209-14323	13 - 31 13 - 42 13 - 77 13 -106	7	BF130	P1	F	0	C		R	1560-544-8472	ANAA
209-14324	21 - 27 21 -137	1	BD 15	M		0					
209-14325- 1		1	BF131	M		0					
209-14325- 2		1	BF131	M		0					
209-14326- 3		2	BF132	M		0					
209-14326- 4		2	BF132	M		0					
209-14327		1	BH445	M		0					
209-14327- 3		1	BH445	M		0					
209-14327- 5		1	BH445	M		0					
209-14328		1	CE100	M		F					
209-14329	15 -311 121 - 44 342 - 58	3									
209-14330	16	6	BF133	P1	F	0	C		R	4730-570-2229	ANAA
209-14331- 1		1	BD 17	M		0					
209-14331- 2		1	BD 17	M		0					
209-14333- 3	13 - 9	1	BN170	P1	0	0	S		R	1560-336-2718	ANAA
209-14333- 4	13	1	BN170	P1	0	0	S		R	1560-336-2719	ANAA
209-14334	13 - 65	2	BF134	M		F					
209-14335- 3	13 - 66	6	BF135	M		F					
209-14335- 5	13 - 67	2	BF135	M		F					
209-14335- 7	13 - 68	2	BF135	M		F					
209-14335- 9	13 - 69	2	BF135	M		F					
209-14336	13 - 58	2	BH446	P1	F	0	S		R	1560-544-8475	ANAA
209-14337	13 -121	2	BF136	M		0					
209-14338- 3	13 -122	6	BF137	M		F					
209-14338- 5	13 -123	4	BF137	M		F					
209-14338- 7	13 -124	6	BF137	M		F					
209-14338- 9	13 -125	2	BF137	M		F					
209-14338- 11	13 -126	2	BF137	M		F					
209-14339- 3	16 -196	1	BN159	P1	F	0	S		R	1560-522-8865	ANAA
209-14339- 4	16	1	BN159	P1	F	0	S		R	1560-522-8868	ANAA
209-14340	2 - 2	2	BF138	P	F	0	S		R	1560-341-4644	ANAA
209-14340- 3		1	BF138	M		0					
209-14340- 11	2	1	BF138	M		0					
209-14341	16 -123	6	DK 80	P1	0	0	C		R	1560-510-1130	ANAA
209-14342- 1	16 -121	1	DJ 44	M		0					
209-14342- 2	16	1	DJ 44	M		0					
209-14343	16 - 98	2	DJ 62	M		0					
209-14344	16 -108	2	DJ 45	M		0					
209-14345		1	BH448	M		0					
209-14345- 1	16 -122	1	BH448	M		0					
209-14345- 2	16	1	BH448	M		0					
209-14345- 3		1	BH448	M		0					
209-14345- 4		1	BH448								
209-14346	16 - 11	2	DJ 46	M		0					
209-14347	16 - 19	1	DJ 63	M		0					
209-14348- 3		1	BN161	X1							
209-14348- 4		1	BN161	X1							
209-14348- 11	2 - 5	1	BN161	X2							
209-14348- 12	2	1	BN161	X2							
209-144101- 1	10	1	BY187	M		0					
209-144101- 2	10	1	BY187	M		0					
209-144101- 3		1	BY187	M		0					
209-144101- 4		1	BY187	M		0					
209-144102- 1		1	BY188	M		0					
209-144102- 2		1	BY188	M		0					
209-144111- 1	10 - 16	1	BY189	M		0					
209-144111- 2	10	1	BY189	M		0					
209-144112- 1		1	BY190	M		0					
209-144112- 2		1	BY190	M		0					
209-144112- 3		1	BY190	M		0					
209-144112- 4		1	BY190	M		0					
209-144112- 5		1	BY190	M		0					
209-144112- 6		1	BY190	M		0					
209-144113- 1		1	BY191	M		0					
209-144113- 2		1	BY191	M		0					
209-144113- 3		1	BY191	M		0					
209-144113- 4		1	BY191	M		0					
209-144113- 5		1	BY191	M		0					
209-144113- 6		1	BY191	M		0					
209-144114- 1	9 - 23	1	BH451	M		0					
209-144114- 2	9	1	BH451	M		0					
209-144114- 3		1	BH451	M		0					
209-144114- 4		1	BH451	M		0					
209-144114- 5		1	BH451	M		0					
209-144114- 6		1	BH451	M		0					
209-144115- 1		1	BN168	M		0					
209-144115- 2		1	BN168	M		0					
209-144116- 1		1	BF141	M		0					
209-144116- 2		1	BF141	M		0					
209-144117- 1		3	BF140	M		0					
209-144117- 2		3	BF140	M		0					
209-144118- 1		6	BF143	M		0					
209-144118- 2		6	BF143	M		0					
209-144119		2	BF142	M		0					
209-144120- 1	17 - 53	1	CJ240	M		0					
209-144120- 2	17	1	CJ240	M		0					
209-144120- 7		1	CJ240	M		0					
209-144120- 8		1	CJ240	M		0					
209-144120- 9		1	CJ240	M		0					
209-144120- 10		1	CJ240	M		0					
209-144120- 11		1	CJ240	M		F					
209-144120- 12		2	CJ240	M		F					
209-144120- 13		1	CJ240	M		F					
209-144120- 14		1	CJ240	M		F					
209-144120- 15	17 - 54	2	CJ240	M		F					
209-144120- 17	17 - 59	1	CJ240	M		F					
209-144120- 18	17	1	CJ240	M		F					
209-144120- 19		1	CJ240	M		0					
209-144120- 20		1	CJ240	M		0					
209-144120- 21		1	CJ240	M		0					
209-144120- 22		1	CJ240	M		0					
209-144120-201	17	1	CJ240	M		0					
209-144120-202	17	1	CJ240	M		0					
209-144121- 1	9 - 25	1	BF144	M		0					
209-144121- 2	9	1	BF144	M		0					
209-144121- 3		1	BF144	M		0					
209-144121- 4		1	BF144	M		0					
209-144121- 5		1	BF144	M		0					
209-144121- 6		1	BF144	M		0					
209-144122- 1		2	BF145	M		0					

PART NUMBER	FIGURE AND INDEX	TOTAL QTY.	MICRO-FILM NUMBER	MAINTENANCE CODE DATA: SOURCE CODE	INSTL CAPABILITY	PRE-INSTL CAPABILITY	RECOVERABILITY	SUPPORT EQUIPMENT	FEDERAL STOCK NUMBER DATA: COGNIZANCE CODE	FEDERAL STOCK NUMBER	MFG. CODE (TSMC)
209-144122- 2		2	BF145	M		0					
209-144123- 1		2	BF146	M		0					
209-144123- 3		2	BF146	M		0					
209-144125- 1		1	BF147	M		0					
209-144125- 2		1	BF147	M		0					
209-144126- 1		1	CE 35	M		0					
209-144126- 2		1	CE 35	M		0					
209-144127- 7		1	BH453	M		0					
209-144127- 8		1	BH453	M		0					
209-144127- 9		1	BH453	M		0					
209-144127- 10		1	BH453	M		0					
209-144128- 1	17 - 30	1	BH454	P	F	0	S				
209-144128- 2	17	1	BH454	P	F	0	S				
209-144128- 3		2	BH454	M		0					
209-144128- 5		2	BH454	M		0					
209-144129- 1		1	BF148	M		0					
209-144129- 2		1	BF148	M		0					
209-144130- 1		1	BF149	M		0					
209-144130- 2		1	BF149	M		0					
209-144131- 1		1	BF150	M		0					
209-144131- 2		1	BF150	M		0					
209-144132- 1		1	BF151	M		0					
209-144132- 2		1	BF151	M		0					
209-144133- 1		1	BF152	M		0					
209-144133- 2		1	BF152	M		0					
209-144134- 1		1	BN169	M		0					
209-144134- 2		1	BN169	M		0					
209-144135- 1	17 - 24	1	BF153	M		0					
209-144135- 2	17	1	BF153	M		0					
209-144136- 1		1									
209-144136- 3	17 - 23	1	BF154								
209-144136- 4	17	1	BF154								
209-144137- 1		1	CV 44	M		0					
209-144137- 2		1	CV 44	M		0					
209-144137- 3		1	CV 44	M		0					
209-144137- 4		1	CV 44	M		0					
209-144139- 1		6	BF155	M		0					
209-144139- 2		6	BF155	M		0					
209-144140- 1		6	BF156	M							
209-144140- 2		6	BF156	M		0					
209-144141- 1	20 - 54	1	BN165	M		0			R	1560-031-4845	ANAA
209-144141- 2	20	1	BN165	M		0			R	1560-031-4846	ANAA
209-144142- 1	20 - 47	1	BN164	M		0			R	1560-031-4689	ANAA
209-144142- 2	20	1	BN164	M		0			R	1500-C00-2268	ANAA
209-144143- 5		1	CP 69	M		0					
209-144143- 6		1	CP 69	M		0					
209-144143- 15		1	CP 69	M		0					
209-144143- 16		1	CP 69	M		0					
209-144144- 1		1	BH456	M		0					
209-144144- 2		1	BH456	M		0					
209-144144- 3		1	BH456	M		0					
209-144144- 4		1	BH456	M		0					
209-144144- 5		1	BH456	M		0					
209-144144- 11		1	BH456	M		0					
209-144144- 12		1	BH456	M		0					
209-144145- 1		1	BF157	M		0					
209-144145- 2		1	BF157	M		0					
209-144146- 1		1	BH458	M		0					
209-144146- 2		1	BH458	M		0					
209-144147- 1		1	BH459	M		0					
209-144147- 2		1	BH459	M		0					
209-144148- 1	17 - 30	1	CE 38	P	F	0	S		R	1560-570-2230	ANAA
209-144148- 2	17	1	CE 38	P	F	0	S		R	1560-570-2231	ANAA
209-144148- 3		1	CE 38	M		0					
209-144148- 4		1	CE 38	M		0					
209-144148- 11	17	1	CE 38	P	F	0	S		R	1560-588-3544	ANAA
209-144148- 12	17	1	CE 38	P	F	0	S		R	1560-588-3543	ANAA
209-144150- 3	22	18	CE 87	P	0	0	S		R	1560-579-9515	ANAA
209-144150- 5	15 22	46	CE 87	P	0	0	S		R	1560-516-5955	ANAA
209-144150- 7	15 22	142	CE 87	P	0	0	S		R	1560-516-5954	ANAA
209-144150- 9	22	48	CE 87	P	0	0	S		R	1560-516-5958	ANAA
209-14416- 1		1	BH461	M		0					
209-14416- 2		1	BH461	M		0					
209-14417- 1		1	DP269	M		0					
209-14417- 2		1	DP269	M		0					
209-14417- 3		1	DP269	M		0					
209-14417- 4		1	DP269	M		0					
209-14418		1	DP270								
209-14418- 1		1	DP270	M		0					
209-14418- 2		1	DP270	M		0					
209-14418- 3		1	DP270	M		0					
209-14418- 4		1	DP270	M		0					
209-14419- 1		1	BH464	M		0					
209-14419- 2		1	BH464	M		0					
209-14420- 1		1	BH465	M		0					
209-14420- 2		1	BH465	M		0					
209-14421- 1		1	BH466	M		0					
209-14422- 3		1	DL161	X1							
209-14422- 4		1	DL161	X1							
209-14422- 11	17 - 49	1	DL161	P1	0	0	S		R	1560-037-2526	ANAA
209-14422- 12	17	1	DL161	P1	0	0	S		R	1560-037-2527	ANAA
209-14423- 3		1	BN163	X1							
209-14423- 4		1	BN163	X1							
209-14423- 11	17 - 47	1	BN163	P1	0	0	S		P	1560-037-2528	ANAA
209-14423- 12	17	1	BN163	P1	0	0	S		P	1560-037-2529	ANAA
209-14424- 3	17 - 31	1	BN157	P1	0	0	S		P	1560-037-2530	ANAA
209-14424- 4	17	1	BN157	P1	0	0	S		P	1500-C00-2269	ANAA
209-14425- 1	17	1	BN162	P1	0	0	S		P	1560-037-2531	ANAA
209-14425- 2	17	1	BN162	P1	0	0	S		P	1560-037-2532	ANAA
209-14426- 13	17 - 7	1	BN150	P1	0	0	S		P	1560-031-4847	ANAA
209-14426- 14	17	1	BN150	P1	0	0	S		P	1560-031-4848	ANAA
209-14429- 3	17 - 12	1	BN151	X1							
209-14429- 4	17	1	BN151	X1							

PART NUMBER	FIGURE AND INDEX	TOTAL QTY.	MICRO-FILM NUMBER	MAINTENANCE CODE DATA: SOURCE CODE	INSTL CAPABILITY	PRE-INSTL CAPABILITY	RECOVERABILITY	SUPPORT EQUIPMENT	FEDERAL STOCK NUMBER DATA: COGNIZANCE CODE	FEDERAL STOCK NUMBER	MFG. CODE (TSMC)
209-14430- 3	17 - 11	1	BN145	X1							
209-14430- 4	17	1	BN145	X1							
209-14432- 3		1	CJ237	X1							
209-14432- 4		1	CJ237	X1							
209-14432- 11	17 176 - 13	1	CJ237	P1	0	0	S		R	1560-544-8516	ANAA
209-14432- 12	17	1	CJ237	P1	0	0	S		R	1560-544-8517	ANAA
209-14448- 1	9 - 21	1	BE159	M		0					
209-14448- 2	9	1	BE159	M		0					
209-14448- 3		1	BF159	M		0					
209-14448- 4		1	BF159	M		0					
209-14448- 5		1	BF159	M		0					
209-14448- 6		1	BF159	M		0					
209-14449- 1	10 - 14	1	BH467	M		0					
209-14449- 2	10	1	BH467	M		0					
209-14449- 3		1	BH467	M		0					
209-14449- 4		1	BH467	M		0					
209-14449- 5		1	BH467	M		0					
209-14449- 6		1	BH467	M		0					
209-14450- 1	21 - 55	1	DP292	P1	F	0	S		R	1560-031-4849	ANAA
209-14450- 2	21	1	DP292	P1	F	0	S		R	1560-031-4850	ANAA
209-14450- 3		1	DP292	M		0					
209-14450- 4		1	DP292	M		0					
209-14450- 5		1	DP292	M		0					
209-14450- 6		1	DP292	M		0					
209-14450- 7		2	DP292	M		0					
209-14450- 9		1	DP292	M		0					
209-14450- 10		1	DP292	M		0					
209-14450- 11		1	DP292	M		0					
209-14450- 12		1	DP292	M		0					
209-14450- 13		1	DP292	M		0					
209-14450- 14		1	DP292	M		0					
209-14450- 15		1	DP292	M		0					
209-14450- 16		1	DP292	M		0					
209-14450- 17		1	DP292	M		0					
209-14450- 19		1	DP292	M		0					
209-14450- 21		2	DP292	M		0					
209-14450- 23		2	DP292	M		0					
209-14450- 25		1	DP292	M		0					
209-14450- 27		1	DP292	M		0					
209-14450- 28		1	DP292	M		0					
209-14450- 29		1	DP292	M		0					
209-14450- 31		1	DP292	M		0					
209-14450- 32		1	DP292	M		0					
209-14450- 33		1	DP292	M		0					
209-14450- 34		1	DP292	M		0					
209-14450- 35		1	DP292	M		0					
209-14450- 36		1	DP292	M		0					
209-14450- 37		1	DP292	M		0					
209-14450- 38		1	DP292	M		0					
209-14450-101	21	1	DP292	P1	F	0	S		R	1560-586-4580	ANAA
209-14450-102	21	1	DP292	P1	F	0	S		R	1560-586-4579	ANAA
209-14451- 1		1	BH468								
209-14451- 2		1	BH468								
209-14451- 3		1	BH468	M		0					
209-14451- 4		1	BH468	M		0					
209-14452- 1		1									
209-14452- 2		1									
209-14453- 1		1	BH469								
209-14453- 2		1	BH469								
209-14453- 3		1	BH469								
209-14453- 4		1	BH469								
209-14453- 5		2	BH469								
209-14453- 7		2	BH469								
209-14454- 1		1	BH470								
209-14454- 2		1	BH470								
209-14454- 3		1	BH470								
209-14454- 4		1	BH470								
209-14454- 7		2	BH470								
209-14455- 1		1	BF160	M		0					
209-14455- 2		1	BF160	M		0					
209-14456- 1		1	BF161								
209-14456- 2		1	BF161								
209-14457- 3		2	BF162	M		0					
209-14458- 5		2	BF163								
209-14458- 7		2	BF163	M		0					
209-14459- 5		2	BF164	M		0					
209-14460- 1		1	CE 41	M		0					
209-14460- 2		1	CE 41	M		0					
209-14461- 1	21 - 57	1	BN172	P1	F	0	S		R	1560-031-4851	ANAA
209-14461- 2	21	1	BN172	P1	F	0	S		R	1560-031-4852	ANAA
209-14461- 3	17 - 38	1	BN172	P1	F	0	S		P	1560-037-2534	ANAA
209-14461- 4	17	1	BN172	P1	F	0	S		R	1560-037-2535	ANAA
209-14462	10 - 56	2	BF165	M		0					
209-14462- 3		1	BF165	M		0					
209-14463- 1	21 - 58	1	BN166	P1	F	0	S		R	1560-031-4853	ANAA
209-14463- 2	21	1	BN166	P1	F	0	S		R	1560-031-4854	ANAA
209-14463- 3	17 - 41	1	BN166						R	1560-037-2536	ANAA
209-14463- 4	17	1	BN166	P1	F	0	S		R	1560-037-2537	ANAA
209-14464	9 - 27	1	DQ 1								
209-14464- 3		2	DQ 1	M		0					
209-14464- 5		2	DQ 1	M		0					
209-14471- 1	17 - 57	1	BF166	M		0					
209-14471- 2	17	1	BF166	M		0					
209-14475- 1	20 - 51	1	BN147	P1	F	0	S		R	1560-031-4855	ANAA
209-14475- 2	20	1	BN147	P1	F	0	S		R	1560-031-4856	ANAA
209-14475- 3		2	BN147	M		0					
209-14475- 5		2	BN147	M		0					
209-14475- 11	20	1	BN147	P1	F	0	S		R	1560-574-6070	ANAA
209-14475- 12	20	1	BN147						R	1560-574-6069	ANAA
209-14476- 1	20 - 53	1	BN154	P1	0	0	S		P	1560-037-2538	ANAA
209-14476- 2	20	1	BN154	P1	0	0	S		R	1560-037-2539	ANAA
209-14476- 3	17 - 35	2	BN154	P1	0	0	S		R	1560-037-2540	ANAA
209-14476- 5	17 - 18	1	BN154	P1	0	0	S		R	1560-037-2541	ANAA
209-14476- 6	17	1	BN154	P1	0	0	S		P	1560-037-2542	ANAA

PART NUMBER	FIGURE AND INDEX	TOTAL QTY.	MICRO-FILM NUMBER	MAINTENANCE CODE DATA: SOURCE CODE	INSTL CAPABILITY	PRE-INSTL CAPABILITY	RECOVERABILITY	SUPPORT EQUIPMENT	FEDERAL STOCK NUMBER DATA: COGNIZANCE CODE	FEDERAL STOCK NUMBER	MFG. CODE (TSMC)
209-14476- 7	20	1	BN154						R	1560-588-6983	ANAA
209-14476- 8	20	1	BN154						R	1560-588-6983	ANAA
209-14477- 1	20 - 52	1	BN171	P1	O	O	S		R	1560-037-2543	ANAA
209-14477- 2	20	1	BN171	P1	O	O	S		R	1560-037-2544	ANAA
209-14477- 3	17 - 17	1	BN171	P1	O	O	S		R	1560-037-2370	ANAA
209-14477- 4	17	1	BN171	P1	O	O	S		R	1560-037-2545	ANAA
209-14482- 5		1	BH472	M		O					
209-14482- 6		1	BH472	M		O					
209-14482- 7		1	BH472	M		O					
209-14482- 8		1	BH472	M		O					
209-14484	10 - 18	1	BF167	M		O					
209-14484- 3		2	BF167	M		O					
209-14484- 5		2	BF167	M		O					
209-14485- 1	20 - 45	1	BP 96	P1	F	O	S		R	1560-031-4857	ANAA
209-14485- 2	20	1	BP 96	P1	F	O	S		R	1560-031-4890	ANAA
209-14485- 3		2	BP 96	M		O					
209-14486- 1	17 - 5	1	BP 99	P1	O	O	S		R	1560-037-2546	ANAA
209-14486- 2	17	1	BP 99	P1	O	O	S		R	1560-037-2547	ANAA
209-14486- 3	20 - 49	1	BP 99	P1	O	O	S		R	1560-037-2548	ANAA
209-14486- 4	20	1	BP 99	P1	O	O	S		R	1560-037-2549	ANAA
209-14486- 5	17 - 6	1	BP 99	P1	O	O	S		R	1560-037-2371	ANAA
209-14486- 6	17	1	BP 99	P1	O	O	S		R	1560-037-2550	ANAA
209-14486- 7	20 - 48	1	BP 99	P1	O	O	S		R	1560-037-2551	ANAA
209-14486- 8	20	1	BP 99	P1	O	O	S		R	1560-037-2552	ANAA
209-14487- 1	17 - 3	1	BP 87	P1	O	O	S		R	1560-031-4858	ANAA
209-14487- 2	17	1	BP 87	P1	O	O	S		R	1560-031-4859	ANAA
209-14487- 3	20 - 46	1	BP 87	P1	O	O	S		R	1560-037-2553	ANAA
209-14487- 4	20	1	BP 87	P1	O	O	S		R	1560-037-2554	ANAA
209-14494- 1	9 - 37	1	BH473	M		F					
209-14494- 2	9	1	BH473	M		F					
209-14494- 3		1	BH473	M		F					
209-14494- 4		1	BH473	M		F					
209-14495	17 - 13	2	BF168	M		O					
209-14497	19 - 20	2	BH474	P	F	O	S		R	5306-031-4860	ANAA
209-14498- 1	9 - 30	2	DG111	M		F					
209-14498- 2	9	2	DG111	M		F					
209-14498- 3		4	DG111	M		F					
209-14498- 4		4	DG111	M		F					
209-14499		1	BF169								
209-14501- 1		1	BP109	U							
209-14501- 2		1	BP109	U							
209-14501-201		1	BP109	U							
209-14501-202		1	BP109	U							
209-14501-301		1	BP109	U							
209-14501-302		1	BP109	U							
209-14501-321		1	BP109	U							
209-14501-312		1	BP109	U							
209-14501-321		1	BP109	U							
209-14501-322		1	BP109	U							
209-14502- 1	357	1	CG243	U							
209-14502- 2	357	1	CG243	X1							
209-14502- 3	6 - 21	1	CG243	M		O					
209-14502- 4	6	1	CG243	M		O					
209-14502- 5	7 - 13	1	CG243	M		O					
209-14502- 6	7	1	CG243	M		O					
209-14502- 7		4	CG243	M		O					
209-14502- 9		4	CG243	M		O					
209-14502- 11		4	CG243	M		O					
209-14502- 13	6 - 24	1	CG243	M		O					
209-14502- 14		1	CG243	M		O					
209-14502- 15		2	CG243	M		O					
209-14502- 17		2	CG243	M		O					
209-14502- 19		2	CG243	M		O					
209-14502- 20		2	CG243	M		O					
209-14502- 21		2	CG243	M		O					
209-14502- 22		2	CG243	M		O					
209-14502- 25		2	CG243	M		O					
209-14502- 29		6	CG243	M		O					
209-14502- 31		2	CG243	M		O					
209-14502- 33		1	CG243	M		O					
209-14502- 35		6	CG243	M		O					
209-14502- 37	7 - 27	6	CG243	M		O					
209-14502- 39		8	CG243	M		O					
209-14502-201	357	1	CG243	X1							
209-14502-202	357	1	CG243	X1							
209-14503- 1		1	BP107	M		O					
209-14503- 2		1	BP107	M		O					
209-14503- 3		1	BP107	M		O					
209-14503- 4		1	BP107	M		O					
209-14503- 5		2	BP107	M		O					
209-14504- 1	8	1	BP104	A		O					
209-14504- 2	8	1	BP104	A		O					
209-14504- 3		2	BP104	M		O					
209-14504- 5		2	BP104	M		O					
209-14504- 7		2	BP104	M		O					
209-14504- 9		2	BP104	M		O					
209-14504- 11		2	BP104	M		O					
209-14504- 13		2	BP104	M		O					
209-14504- 17		1	BP104	M		O					
209-14504- 18		1	BP104	M		O					
209-14504- 19		1	BP104	M		O					
209-14504- 20		1	BP104	M		O					
209-14504- 51	8	1	BP104	A		O					
209-14504- 52	8	1	BP104	A		O					
209-14505- 1	8 - 10	1	BS206	X2							
209-14505- 2	8	1	BS206	X2							
209-14505- 3		1	BS206	M		O					
209-14505- 4		1	BS206	M		O					
209-14505- 5		2	BS206	M		O					
209-14505- 7		2	BS206	M		O					
209-14505- 9		2	BS206	M		O					
209-14505- 11		2	BS206	M		O					
209-14505- 13		2	BS206	M		O					
209-14505- 17		1	BS206	M		O					
209-14505- 18		1	BS206	M		O					
209-14505- 19		2	BS206	M		O					
209-14505- 21		2	BS206	M		O					
209-14505-201	8	1	BS206	X2							
209-14505-202	8	1	BS206	X2							
209-14506- 1	6 - 22	1	BP 82	P1	F	O	S		R	1560-037-2555	ANAA
209-14506- 2	6	1	BP 82	P1	F	O	S		R	1560-037-2556	ANAA
209-14506- 3		1	BP 82	M		O					
209-14506- 4		1	BP 82	M		O					
209-14506- 11		1	BP 82	M		O					
209-14506- 12		1	BP 82	M		O					
209-14506- 13		6	BP 82	M		O					
209-14506- 15		1	BP 82	X1							
209-14506- 16		1	BP 82	X1							
209-14506- 17		4	BP 82	M		O					
209-14506- 19		2	BP 82	M		O					
209-14506- 21		4	BP 82	M		O					
209-14506- 23		4	BP 82	M		O					
209-14506- 25		4	BP 82	M		O					
209-14506- 27		2	BP 82	M		O					
209-14506- 29		2	BP 82	M		O					
209-14506- 31		2	BP 82	M		O					
209-14506- 33		2	BP 82	M		O					
209-14506- 35		2	BP 82	M		O					
209-14506- 37		1	BP 82	X1							
209-14506- 38		1	BP 82	X1							
209-14506- 41	6	1	BP 82						R	1560-037-2555	ANAA
209-14506- 42	6	1	BP 82						R	1560-037-2556	ANAA
209-14508- 5	173 - 11	1	CU262						R	1560-571-5459	ANAA
209-14508- 6	173	1	CU262						R	1560-571-5460	ANAA
209-14509	173 - 71	1	CG233	M		O					
209-14510- 3	173 - 75	1	CB 69	P1	O	O	S		R	1560-523-0797	ANAA
209-14510- 4	173	1	CB 69	P1	O	O	S		R	1560-523-0798	ANAA
209-14512- 1		1	DB 67	X1							
209-14512- 2		1	DB 67	X1							
209-14512- 3	6	1	DB 67								
209-14512- 4	6	1	DB 67	M		O					
209-14512- 5	7	1	DB 67	M		O					
209-14512- 6	7	1	DB 67	M		O					
209-14512- 7		4	DB 67	M		O					
209-14512- 9		4	DB 67	M		O					
209-14512- 11		4	DB 67	M		O					
209-14512- 13	3 - 28	1	DB 67	M		O					
	6										
209-14512- 15		2	DB 67	M		O					
209-14512- 17		1	DB 67	M		O					
209-14512- 19		2	DB 67	M		O					
209-14512- 20		2	DB 67	M		O					
209-14512- 21		2	DB 67	M		O					
209-14512- 22		2	DB 67	M		O					
209-14512- 25		2	DB 67	M		O					
209-14512- 29		6	DB 67	M		O					
209-14512- 31		2	DB 67	M		O					
209-14512- 33		1	DB 67	M		O					
209-14512- 35		6	DB 67	M		O					
209-14512- 37	7	3	DB 67								
209-14512- 39	6 - 47	4	DB 67	M		O					
209-14512- 41	6 - 42	1	DB 67								
209-14512- 51	357	1	DB 67	X1							
209-14512- 52	357	1	DB 67	X1							
209-14514- 3	6 - 25	1	BS220	P1	O	O	C		R	1560-037-2557	ANAA
209-14514- 4	6	1	BS220	P1	O	O	C		R	1560-037-2558	ANAA
209-14514- 5	6	1	BS220						R	1560-603-3542	ANAA
209-14514- 6	6	1	BS220						R	1560-603-3543	ANAA
209-14515- 1	7 - 14	1	BY252	P1	O	O	C				
209-14515- 2	7	1	BY252	P1	O	O	C		R	1560-037-2559	ANAA
209-14515- 3		1	BY252	X1							
209-14515- 4		1	BY252	X1							
209-14515- 5		1	BY252	X1							
209-14515- 6		1	BY252	X1							
209-14515- 11	7	1	BY252	P1	O	O	C		R	1560-511-1667	ANAA
209-14515- 12	7	1	BY252	P1	O	O	C		R	1560-569-1129	ANAA
209-14516- 1		1	DE249	M		O					
209-14516- 2		1	DE249	M		O					
209-14517- 1		1	CC 98	M		O					
209-14517- 2		1	CC 98	M		O					
209-14517- 3		1	CC 98	M		O					
209-14517- 4		1	CC 98	M		O					
209-14517- 5		1	CC 98	M		O					
209-14517- 6		1	CC 98	M			O				
209-14517- 7		1	CC 98	M		O					
209-14517- 8		1	CC 98	M		O					
209-14519- 3		1	BU156	X1							
209-14519- 4		1	BU156	X1							
209-14519- 11	8 - 5	1	BU156	X2							
209-14519- 12	8	1	BU156	X2							
209-14520- 3	8 - 8	2	BF171	M		O					
209-14520- 4		1	BF171								
209-14520- 5	8 - 7	2	BF171	M		O					
209-14521- 1	8 - 9	1	BP 88	X2							
209-14521- 2	8	1	BP 88	X2							
209-14525- 3		1	BY250	X1							
209-14525- 4		1	BY250	X1							
209-14525- 5		1	BY250	X1							
209-14525- 6		1	BY250	X1							
209-14525- 11	13 - 11	1	BY250	P1	O	O	S		R	1560-037-2563	ANAA
209-14525- 12	13	1	BY250	P1	O	O	S		R	1560-037-2564	ANAA
209-14525- 23	13	1	BY250	P1	O	O	S		R	1560-333-7876	ANAA
209-14525- 22	13	1	BY250	P1	O	O	S		R	1560-333-7877	ANAA
209-14526- 1		1	CB 99	M		O					
209-14526- 2		1	CB 99	M		O					
209-14526- 3		1	CB 99	M		O					
209-14526- 4		1	CB 99	M		O					
209-14526- 5		1	CB 99	M		O					
209-14526- 6		1	CB 99	M		O					
209-14526- 7		1	CB 99	M		O					

PART NUMBER	FIGURE AND INDEX	TOTAL QTY.	MICRO-FILM NUMBER	MAINTENANCE CODE DATA: SOURCE CODE	INST'L CAPABILITY	PRE-INST'L CAPABILITY	RECOVERABILITY	SUPPORT EQUIPMENT	COGNIZANCE CODE	FEDERAL STOCK NUMBER DATA: FEDERAL STOCK NUMBER	MFG. CODE (TSMC)
209-14526- 8		1	CB 99	M		0					
209-14527- 1		1	CA166	M		0					
209-14527- 2		1	CA166	M		0					
209-14527- 3		1	CA166	M		0					
209-14527- 4		1	CA166	M		0					
209-14527- 5		1	CA166	M		0					
209-14527- 6		1	CA166	M		0					
209-14527- 7		1	CA166	M		0					
209-14527- 8		1	CA166	M		0					
209-14528- 1		1	CA184	M		0					
209-14528- 2		1	CA184	M		0					
209-14528- 3		1	CA184	M		0					
209-14528- 4		1	CA184	M		0					
209-14528- 5		1	CA184	M		0					
209-14528- 6		1	CA184	M		0					
209-14528- 7		1	CA184	M		0					
209-14528- 8		1	CA184	M		0					
209-14528- 9		1	CA184	M		0					
209-14528- 10		1	CA184	M		0					
209-14528- 11		2	CA184	M		0					
209-14529- 1		1	BH479	M		0					
209-14529- 2		1	BH479	M		0					
209-14529- 3		1	BH479	M		0					
209-14529- 4		1	BH479	M		0					
209-14529- 5		1	BH479	M		0					
209-14529- 6		1	BH479	M		0					
209-14529- 7		1	BH479	M		0					
209-14529- 8		1	BH479	M		0					
209-14530- 1		1	CB102	M		0					
209-14530- 2		1	CB102	M		0					
209-14530- 3		1	CB102	M		0					
209-14530- 4		1	CB102	M		0					
209-14530- 5		1	CB102	M		0					
209-14530- 6		1	CB102	M		0					
209-14530- 7		1	CB102	M		0					
209-14530- 8		1	CB102	M		0					
209-14530- 11		1	CB102	M		0					
209-14530- 12		1	CB102	M		0					
209-14530- 13		1	CB102	M		0					
209-14530- 14		1	CB102	M		0					
209-14531- 1		1	BH481	M		0					
209-14531- 2		1	BH481	M		0					
209-14531- 3		1	BH481	M		0					
209-14531- 4		1	BH481	M		0					
209-14531- 5		1	BH481	M		0					
209-14531- 6		1	BH481	M		0					
209-14531- 7		1	BH481	M		0					
209-14531- 8		1	BH481	M		0					
209-14532- 1		1	CB101	M		0					
209-14532- 2		1	CB101	M		0					
209-14532- 3		1	CB101	M		0					
209-14532- 4		1	CB101	M		0					
209-14532- 5		1	CB101	M		0					
209-14532- 6		1	CB101	M		0					
209-14532- 7		1	CB101	M		0					
209-14532- 8		1	CB101	M		0					
209-14532- 11		1	CB101	M		0					
209-14532- 12		1	CB101	M		0					
209-14532- 13		1	CB101	M		0					
209-14532- 14		1	CB101	M		0					
209-14532- 17		1	CB101	M		0					
209-14532- 18		1	CB101	M		0					
209-14533- 1		1	BH483	M		0					
209-14533- 2		1	BH483	M		0					
209-14533- 3		1	BH483	M		0					
209-14533- 4		1	BH483	M		0					
209-14533- 5		1	BH483	M		0					
209-14533- 6		1	BH483	M		0					
209-14533- 7		1	BH483	M		0					
209-14533- 8		1	BH483	M		0					
209-14535- 1		1	BH484	M		0					
209-14535- 2		1	BH484	M		0					
209-14535- 3		1	BH484	M		0					
209-14535- 4		1	BH484	M		0					
209-14535- 5		2	BH484	M		0					
209-14535- 6		2	BH484	M		0					
209-14536	3 - 18 357	2	BJ133	M		F					
209-14537	3 - 12 357	2	BJ134	M		F					
209-14537- 3		2	BJ134	M		F					
209-14538- 1		1	BJ135	M		0					
209-14538- 2		1	BJ135	M		0					
209-14538- 3		1	BJ135	M		0					
209-14538- 4		1	BJ135	M		0					
209-14538- 5		1	BJ135	M		0					
209-14538- 6		1	BJ135	M		0					
209-14538- 7		1	BJ135	M		0					
209-14538- 8		1	BJ135	M		0					
209-14539- 1		1	BJ136	M		0					
209-14539- 2		1	BJ136	M		0					
209-14539- 3		1	BJ136	M		0					
209-14539- 4		1	BJ136	M		0					
209-14539- 9		1	BJ136	M		0					
209-14539- 10		1	BJ136	M		0					
209-14539- 11		1	BJ136	M		0					
209-14539- 12		1	BJ136	M		0					
209-14540- 3		1	BJ137	M		0					
209-14540- 4		1	BJ137	M		0					
209-14541- 1		1	CB103	M		0					
209-14541- 2		1	CB103	M		0					
209-14541- 3		1	CB103	M		0					
209-14541- 4		1	CB103	M		0					
209-14541- 5		1	CB103	M		0					
209-14541- 7		1	CB103	M		0					
209-14541- 8		1	CB103	M		0					
209-14541- 9		1	CB103	M		0					
209-14541- 10		1	CB103	M		0					
209-14541- 11		1	CB103	M		0					
209-14541- 12		1	CB103	M		0					
209-14541- 13		1	CB103	M		0					
209-14541- 14		1	CB103	M		0					
209-14542- 3		1	BJ139	M		0					
209-14542- 4		1	BJ139	M		0					
209-14543- 1		1	BJ140	M		0					
209-14543- 2		1	BJ140	M		0					
209-14543- 3		1	BJ140	M		0					
209-14543- 4		1	BJ140	M		0					
209-14543- 5		1	BJ140	M		0					
209-14543- 6		1	BJ140	M		0					
209-14543- 7		1	BJ140	M		0					
209-14543- 8		1	BJ140	M		0					
209-14544- 1		1	DH273	M		0					
209-14544- 2		1	DH273	M		0					
209-14544- 3		1	DH273	M		0					
209-14544- 4		1	DH273	M		0					
209-14544- 5		1	DH273	M		0					
209-14544- 6		1	DH273	M		0					
209-14544- 7		1	DH273	M		0					
209-14544- 8		1	DH273	M		0					
209-14545- 1		1	DH274	M		0					
209-14545- 2		1	DH274	M		0					
209-14545- 3		1	DH274	M		0					
209-14545- 4		1	DH274	M		0					
209-14545- 5		1	DH274	M		0					
209-14545- 6		1	DH274	M		0					
209-14545- 7		1	DH274	M		0					
209-14545- 8		1	DH274	M		0					
209-14545- 9		1	DH274	M		0					
209-14545- 10		1	DH274	M		0					
209-14546- 1		1	DH275	M		0					
209-14546- 2		1	DH275	M		0					
209-14546- 3		1	DH275	M		0					
209-14546- 4		1	DH275	M		0					
209-14546- 5		1	DH275	M		0					
209-14546- 6		1	DH275	M		0					
209-14546- 7		1	DH275	M		0					
209-14546- 8		1	DH275	M		0					
209-14547- 1		1	BJ144	M		0					
209-14547- 2		1	BJ144	M		0					
209-14547- 3		1	BJ144	M		0					
209-14547- 4		1	BJ144	M		0					
209-14547- 5		1	BJ144	M		0					
209-14547- 6		1	BJ144	M		0					
209-14548		1	BJ145								
209-14548- 1		1	BJ145	M		0					
209-14549- 1		1	BF170	M		0					
209-14549- 2		1	BF170	M		0					
209-14557	6	4	DA 7	M		0					
209-14559- 1		1	DG109	M		0					
209-14559- 2		1	DG109	M		0					
209-14559- 3		1	DG109	M		0					
209-14559- 4		1	DG109	M		0					
209-14559- 5		1	DG109	M		0					
209-14559- 7		1	DG109	M		0					
209-14559- 8		1	DG109	M		0					
209-14559- 9		1	DG109	M		0					
209-14559- 10		1	DG109	M		0					
209-14559- 11		1	DG109	M		0					
209-14559- 12		1	DG109	M		0					
209-14559- 13		1	DG109	M		0					
209-14559- 14		1	DG109	M		0					
209-14560- 3		1	BJ146	M		0					
209-14560- 4		1	BJ146	M		0					
209-14561- 3		1	BJ147	M		0					
209-14561- 4		1	BJ147	M		0					
209-14562- 3		1	BU 13	M		0					
209-14562- 4		1	BU 13	M		0					
209-14563- 3		1	BF172	M		0					
209-14563- 4		1	BF172	M		0					
209-14564	6	72	DL132	M		0					
209-14564- 3	6	72	DL132	M		0					
209-14565- 1	3 357	1	CB 35	M		F					
209-14565- 2	3 357	1	CB 35	M		F					
209-14565- 3		1	CB 35	M		F					
209-14565- 4		1	CB 35	M		F					
209-14565- 5		1	CB 35	M		F					
209-14565- 6		1	CB 35	M		F					
209-14566- 1	3 357	1	CB 36	M		F					
209-14566- 2	3 357	1	CB 36	M		F					
209-14567- 1	6	1	DL 81	P1	0	0	S		R	1560-569-1132	AMAA
209-14567- 2	6	1	DL 81	P1	0	0	S		R	1560-569-1134	AMAA
209-14567- 5		1	DL 81	X1							
209-14567- 6		1	DL 81	X1							
209-14567- 7		1	DL 81	X1							
209-14567- 8		1	DL 81	X1							
209-14567- 9		1	DL 81	M		0					
209-14567- 10		1	DL 81	M		0					
209-14567- 11		1	DL 81	M		0					
209-14567- 12		1	DL 81	M		0					
209-14567- 15		1	DL 81	M		0					
209-14567- 16		1	DL 81	M		0					
209-14567- 17		1	DL 81	M		0					
209-14567- 18		1	DL 81	M		0					
209-14567- 19		2	DL 81	M		0					
209-14567- 21		2	DL 81	M		0					

PART NUMBER	FIGURE AND INDEX	TOTAL QTY.	MICRO-FILM NUMBER	MAINTENANCE CODE DATA: SOURCE CODE	INST'L CAPABILITY	PRE-INST'L CAPABILITY	RECOVERABILITY	SUPPORT EQUIPMENT	FEDERAL STOCK NUMBER DATA: COGNIZANCE CODE	FEDERAL STOCK NUMBER	MFG. CODE (TSMC)
209-14567- 23		1	DL 81	M		O					
209-14567- 24		1	DL 81	M		O					
209-14567- 25		1	DL 81	M		O					
209-14567- 26		1	DL 81	M		O					
209-14567- 27		1	DL 81	M		O					
209-14567- 28		1	DL 81	M		O					
209-14567- 29		1	DL 81	M		O					
209-14567- 30		1	DL 81	M		O					
209-14567- 31		1	DL 81	M		O					
209-14567- 32		1	DL 81	M		O					
209-14567- 33		1	DL 81	M		O					
209-14567- 34		1	DL 81	M		O					
209-14567- 35		1	DL 81	M		O					
209-14567- 37		1	DL 81	M		O					
209-14567- 39		1	DL 81	M		O					
209-14567- 41		1	DL 81	M		O					
209-14567- 43		1	DL 81	M		O					
209-14567- 45		1	DL 81	M		O					
209-14567- 51	6	1	DL 81						R	1560-571-5461	ANAA
209-14567- 52	6	1	DL 81						R	1560-571-5462	ANAA
209-14568- 3		1	BJ148	M		O					
209-14568- 4		1	BJ148	M		O					
209-14569- 3		1	BJ149	M		O					
209-14569- 4		1	BJ149	M		O					
209-14570- 3	7	6	BR 91	M		O					
209-14570- 5	7	8	BR 91	M		O					
209-14570- 7	7	6	BR 91	M		O					
209-14570- 9	7	2	BR 91	M		O					
209-14570- 11	7	2	BR 91	M		O					
209-14571	3 - 20 357	1	BE366	M		F					
209-14571- 3		1	BE366	M		F					
209-14572- 1	6 - 23	1	BP101	M		O					
209-14572- 2	6	1	BP101	M		O					
209-14572- 3		2	BP101	M		O					
209-14572- 11		1	BP101	M		O					
209-14572- 12		1	BP101	M		O					
209-14572- 13		1	BP101	M		O					
209-14572- 14		1	BP101	M		O					
209-14572- 15		2	BP101	M		O					
209-14572- 16		2	BP101	M		O					
209-14572- 17		2	BP101	M		O					
209-14573- 3		2	BX110	M		O					
209-14573- 4		2	BX110	M		O					
209-14574- 3	3 - 9 357	1	BE368	M		F					
209-14574- 4	3 357	1	BE368	M		F					
209-14575- 1	3 - 3 357	1	BJ150	M		F					
209-14575- 2	3 357	1	BJ150	M		F					
209-14581		8	BE369	M		O					
209-14592- 3		1	CA159	M		O					
209-14592- 4		1	CA159	M		O					
209-14593- 3		1	BJ152	M		O					
209-14593- 4		1	BJ152	M		O					
209-14595- 1		1	CE 56	M		O					
209-14595- 2		1	CE 56	M		O					
209-14595- 3		1	CE 56	M		O					
209-14595- 4		1	CE 56	M		O					
209-14595- 5		1	CE 56	M		O					
209-14595- 6		1	CE 56	M		O					
209-14596- 3		1	BJ154	M		O					
209-14596- 4		1	BJ154	M		O					
209-14597- 3		1	BJ155	M		O					
209-14597- 4		1	BJ155	M		O					
209-14598- 3		1	CB130	M		O					
209-14598- 4		1	CB130	M		O					
209-14599- 1		1	CB 37	M		F					
209-14599- 2		1	CB 37	M		F					
209-14599- 3		1	CB 37	M		F					
209-14599- 4		1	CB 37	M		F					
209-14599- 11	3 - 15 357	1	CB 37	M		F					
209-14599- 12	3 357	1	CB 37	M		F					
209-14600- 1	3 - 6 357	1	CB 38	M		F					
209-14600- 2	3 357	1	CB 38	M		F					
209-14601- 1		1	DD141	A		O					
209-14601- 2		1	DD141	A		O					
209-14601-101		1	DD141	A		O					
209-14601-102		1	DD141	A		O					
209-14601-201		1	DD141	A		O					
209-14601-202		1	DD141	A		O					
209-14602- 1		1	CD 54	U							
209-14602- 2		1	CD 54	U							
209-14602-101		1	CD 54								
209-14602-102		1	CD 54								
209-14602-201		1	CD 54	U							
209-14602-202		1	CD 54	U							
209-14602-211		1	CD 54	X1							
209-14602-212		1	CD 54	X1							
209-14602-221		1	CD 54	X1							
209-14602-222		1	CD 54	X1							
209-14603- 1		1	DC129	M		O					
209-14603- 3		1	DC129	M		O					
209-14603- 4		1	DC129	M		O					
209-14603- 5		1	DC129	M		O					
209-14603- 11		1	DC129	M		O					
209-14603- 13		1	DC129	M		O					
209-14603- 14		1	DC129	M		O					
209-14604- 1		1	CB 90	M		O					
209-14604- 2		1	CB 90	M		O					
209-14604- 3		1	CB 90	M		O					
209-14604- 4		1	CB 90	M		O					
209-14604- 5		1	CB 90	M		O					
209-14604- 6		1	CB 90	M		O					
209-14604- 7		1	CB 90	M		O					
209-14604- 8		1	CB 90	M		O					
209-14604- 9		1	CB 90	M		O					
209-14604- 10		1	CB 90	M		O					
209-14604- 11		1	CB 90	M		O					
209-14604- 12		1	CB 90	M		O					
209-14604- 13		1	CB 90	M		O					
209-14604- 14		1	CB 90	M		O					
209-14604- 17		1	CB 90	M		O					
209-14604- 18		1	CB 90	M		O					
209-14606- 3		2	BE371	M		O					
209-14606- 4		2	BE371	M		O					
209-14607- 1	13 - 39	1	CA152	M		O					
209-14607- 2	13	1	CA152	M		O					
209-14608- 1	13 - 12	2	BE373	M		O					
209-14608- 2	13	2	BE373	M		O					
209-14609- 1		1	CB126	M		O					
209-14609- 2		1	CB126	M		O					
209-14610- 3	13 - 43	1	CJ274	M		O					
209-14610- 4	13	1	CJ274	M		O					
209-14611- 3	13 - 47	1	BS127	M		O					
209-14611- 4	13	1	BS127								
209-14612- 1		1	BJ160	M		O					
209-14612- 2		1	BJ160	M		O					
209-14613- 1		1	BP122	M		O					
209-14613- 2		1	BP122	M		O					
209-14613- 3		1	BP122	M		O					
209-14613- 4		1	BP122	M		O					
209-14613- 5		1	BP122	M		O					
209-14613- 6		1	BP122	M		O					
209-14613- 7		1	BP122	M		O					
209-14613- 8		1	BP122	M		O					
209-14613- 9		2	BP122	M		O					
209-14613- 21		1	BP122	M		O					
209-14613- 22		1	BP122	M		O					
209-14614- 1	13 - 20	1	BJ161	M		O					
209-14614- 2	13	1	BJ161	M		O					
209-14614- 3		1	BJ161	M		O					
209-14614- 4		1	BJ161	M		O					
209-14614- 5		2	BJ161	M		O					
209-14614- 7		1	BJ161	M		O					
209-14614- 8		1	BJ161	M		O					
209-14614- 9		1	BJ161	M		O					
209-14615- 1	13 - 19	1	BJ162	M		O					
209-14615- 2	13	1	BJ162	M		O					
209-14615- 3		1	BJ162	M		O					
209-14615- 4		1	BJ162	M		O					
209-14615- 7		1	BJ162	M		O					
209-14615- 8		1	BJ162	M		O					
209-14615- 9		2	BJ162	M		F					
209-14615- 13		2	BJ162	M		O					
209-14619- 1	13 - 18	1	BJ163	M		O					
209-14619- 2	13	1	BJ163	M		O					
209-14619- 3		1	BJ163	M		O					
209-14619- 4		1	BJ163	M		O					
209-14619- 5		1	BJ163	M		O					
209-14619- 6		1	BJ163	M		O					
209-14619- 7		2	BJ163	M		F					
209-14620- 3	13 - 10	1	BJ164	M		O					
209-14620- 4	13	1	BJ164	M		O					
209-14621- 3		1	BR 74	M		O					
209-14621- 4		1	BR 74	M		O					
209-14622- 1		1	BJ166	M		O					
209-14622- 2		1	BJ166	M		O					
209-14622- 3		1	BJ166	M		O					
209-14622- 4		1	BJ166	M		O					
209-14623- 1		1	DE262								
209-14623- 2		1	DE262								
209-14623- 11	13 - 6	1	DE262	M		O					
209-14623- 12	13	1	DE262	M		O					
209-14624- 1		1	BJ167	M		O					
209-14624- 2		1	BJ167	M		O					
209-14624- 3		1	BJ167	M		O					
209-14624- 4		1	BJ167	M		O					
209-14625		1	BJ168	M		O					
209-14650- 1	7 8	1	BS 62	A		O					
209-14650- 2	7 8	1	BS 62	A		O					
209-14650- 3		2	BS 62	M		O					
209-14650- 5		2	BS 62	M		O					
209-14651- 1	8 - 2	1	CM187	P1	D	O	S		R	1560-569-1136	ANAA
209-14651- 2	8	1	CM187	P1	D	O	S		R	1560-569-1209	ANAA
209-14652- 1	8 - 1	1	CV126	P1	D	O	S		R	1560-343-9122	ANAA
209-14652- 2	8	1	CV126	P1	D	O	S		R	1560-343-9123	ANAA
209-14653- 1	8 - 4	1	BP123	P1	D	O	S		R	1560-343-9124	ANAA
209-14653- 2	8	1	BP123	P1	D	O	S		R	1560-343-9125	ANAA
209-14654- 1	8 - 3	1	BJ169	M		O					
209-14654- 2	8	1	BJ169	M		O					
209-14656	4 - 5	1	BJ170	P1	F	O	C		R	1560-338-1003	ANAA
209-14657- 1		1	BJ171	M		O					
209-14657- 2		1	BJ171	M		O					
209-14657- 3		1	BJ171	M		O					
209-14657- 4		1	BJ171	M		O					
209-14658- 1		1	BJ172	M		O					
209-14658- 2		1	BJ172	M		O					
209-14658- 3		1	BJ172	M		O					
209-14658- 4		1	BJ172	M		O					
209-14659- 1	4 - 1 357	1	CB 79	P1	F	O	S		R	1560-333-7878	ANAA

PART NUMBER	FIGURE AND INDEX	TOTAL QTY.	MICRO-FILM NUMBER	MAINTENANCE CODE DATA: SOURCE CODE	INSTL CAPABILITY	PRE-INSTL CAPABILITY	RECOVERABILITY	SUPPORT EQUIPMENT	FEDERAL STOCK NUMBER DATA: COGNIZANCE CODE	FEDERAL STOCK NUMBER	MFG. CODE (TSMC)
209-14659- 2	6 - 3	1	CB 79	P1	F	0	S		R	1560-333-7879	ANAA
	357										
209-14659- 3		1	CB 79	M		0					
209-14659- 4		1	CB 79	M		0					
209-14659- 5		1	CB 79	M		0					
209-14659- 6	3 - 22	1	CB 79	M		0					
	3 - 24										
209-14659- 7		1	CB 79	M		0					
209-14659- 9		1	CB 79	M		0					
209-14659- 11		1	CB 79	M		0					
209-14659- 12		1	CB 79	M		0					
209-14659- 13		1	CB 79	M		0					
209-14659- 15		1	CB 79	M		0					
209-14659- 18		1	CB 79	M		0					
209-14659- 19		1	CB 79	M		0					
209-14659- 23		2	CB 79	M		0					
209-14659- 25		1	CB 79	M		0					
209-14659- 27		2	CB 79	M		0					
209-14659- 29		2	CB 79	M		0					
209-14659- 35		1	CB 79	M		0					
209-14659- 36		1	CB 79	M		0					
209-14659- 38		1	CB 79	M		0					
209-14659- 40		1	CB 79	M		0					
209-14659- 42		1	CB 79	M		0					
209-14659- 44	3 - 22	1	CB 79	M		0					
	3 - 24										
209-14659- 46	3 - 22	1	CB 79	M		0					
	3 - 24										
209-14659-102	4	1	CB 79	P1	F	0	S		R	1560-508-6830	ANAA
	357										
209-14660- 1		1	DJ197	M		0					
209-14660- 2		1	DJ197	M		0					
209-14663- 3	13 - 3	1	BP121	P1	F	0	S		R	1560-341-4645	ANAA
209-14663- 4	13	1	BP121	P1	F	0	S		R	1560-341-4646	ANAA
209-14664- 1		1	BJ104	M		0					
209-14664- 2		1	BJ104	M		0					
209-14664- 3		1	BJ104	M		0					
209-14664- 4		1	BJ104	M		0					
209-14664- 5		1	BJ104	M		0					
209-14664- 7		1	BJ104	M		0					
209-14664- 9		1	BJ104	M		0					
209-14664- 11		1	BJ104	M		0					
209-14664- 13		1	BJ104	M		0					
209-14664- 14		1	BJ104	M		0					
209-14664- 15		2	BJ104	M		0					
209-14664- 17		1	BJ104	M		0					
209-14701- 1	16 - 10	1	CA 79	X2							
209-14701- 2	16	1	CA 79	X2							
209-14702- 3	16 - 18	1	BX183	X2							
209-14702- 4	16	1	BX183	X2							
209-14704- 3	16 -128	2	BP 93	X2							
209-14705- 3	16 -112	1	DL160	X2							
209-14705- 4	16	1	DL160	X2							
209-14706- 3	16 - 88	1	BX178	X2							
209-14706- 4	16	1	BX178	X2							
209-14712- 3	16 - 99	2	BX187	X2							
209-14719- 3	16 -222	1	CA198	X2							
209-14719- 4	16	1	CA198	X2							
209-14720- 3	16 -218	1	CB 78	X2							
209-14720- 4	16	1	CB 78	X2							
209-14721- 3	16 -209	1	CB 39	M		0					
209-14721- 4	16	1	CB 39	M		0					
209-14722- 3	16 -205	2	CB 82	X2							
209-14803- 1	21 - 54	1	BP110	A		0					
209-14803- 2	21	1	BP110	A		0					
209-14803- 3	21	1	BP110	P1	0	0	S		R	1560-031-4863	ANAA
209-14803- 4	21	1	BP110	P1	0	0	S		R	1560-031-4864	ANAA
209-14803- 5	21	1	BP110	P1	0	0	S		R	1560-031-4865	ANAA
209-14803- 6	21	1	BP110	P1	0	0	S		R	1560-031-4866	ANAA
209-14803- 7	21	1	BP110	PU	0	0	S		R	1560-346-1112	ANAA
209-14803- 8	21	1	BP110	P1	0	0	S		R	1560-346-1113	ANAA
209-14803- 9	21	1	BP110	P1		0	S		R	1560-5R6-4581	ANAA
209-14803- 10	21	1	BP110	P1		0	S		R	1560-5R6-4582	ANAA
209-14803- 11	21 - 56	1	BP110	A		0					
209-14803- 12	21	1	BP110	A		0					
209-14803- 21	21	1	BP110	A		0					
209-14803- 22	21	1	BP110	A		0					
209-14804- 3	21	6	BD 22	M		0					
209-14901- 1	357 - 2	1	DG313	P1	F	0	R		R	1560-031-4867	ANAA
209-14901- 2	357	1	DG313	P1	F	0	R		R	1560-031-4868	ANAA
209-14901-101	357	1	DG313	P1	F	0	R		R	1560-693-8716	ANAA
209-14901-102	357	1	DG313	P1	F	0	R		R	1560-693-8717	ANAA
209-14901-201	357	1	DG313	P1	F	0	R		R	1560-693-8718	ANAA
209-14901-202	357	1	DG313	P1	F	0	R		R	1560-693-8719	ANAA
209-14901-301	357	1	DG313	P1	M	0	R		R	1560-535-5529	ANAA
209-14901-302	357	1	DG313	P1	F	0	R		R	1560-544-8521	ANAA
209-14901-402		1	DG313								
209-14902- 1	357 - 3	1		P1	F	0	R		R	1560-037-2565	ANAA
209-14902- 2	357	1		P1	F	0	R		R	1650-037-2566	ANAA
209-14902-201	357	1		P1	F	0	R		R	1560-693-8721	ANAA
209-14902-202	357	1		P1	F	0	R		R	1560-693-8722	ANAA
209-14902-311		1									
209-14902-312		1									
209-14902-321	357	1							R	1560-594-8647	ANAA
209-14902-322	357	1							R	1560-594-8648	ANAA
209-149098- 7		1									
209-14926- 1	357 - 1	1	DJ 4	P1		0	S		R	1560-031-4869	ANAA
209-14926- 2	357	1	DJ 4	P1	F	0	S		R	1560-031-4870	ANAA
209-14926-101	357 - 1	1	DJ 4	P1	F	0	S		R	1560-544-8522	ANAA
209-14926-102	357	1	DJ 4	P1	F	0	S		R	1560-544-8523	ANAA
209-15225- 11		AR									
209-15501-201		1									
209-15506- 25		4									
209-160009- 1		1	BU175	X2							
209-16001- 29		1									

PART NUMBER	FIGURE AND INDEX	TOTAL QTY.	MICRO-FILM NUMBER	MAINTENANCE CODE DATA: SOURCE CODE	INSTL CAPABILITY	PRE-INSTL CAPABILITY	RECOVERABILITY	SUPPORT EQUIPMENT	FEDERAL STOCK NUMBER DATA: COGNIZANCE CODE	FEDERAL STOCK NUMBER	MFG. CODE (TSMC)
209-16002- 1	20	1	DS 39	P1	F	0	R		R	1560-031-4871	ANAA
209-16002- 2	20	1	DS 39	P1	F	0	R		R	1560-031-4872	ANAA
209-16002- 3		2	DS 39	M		0					
209-16002- 5		2	DS 39	M		0					
209-16002- 11		1	DS 39	M		0					
209-16002- 12		1	DS 39	M		0					
209-16002- 15		2	DS 39	M		0					
209-16002- 17		2	DS 39	M		0					
209-16002- 19		1	DS 39	M		0					
209-16002- 20		1	DS 39	M		0					
209-16002- 21		1	DS 39	M		0					
209-16002- 22		1	DS 39	M		0					
209-16002- 23		1	DS 39	M		0					
209-16002- 24		1	DS 39	M		0					
209-16002- 25		2	DS 39	M		0					
209-16002- 27		1	DS 39	M		0					
209-16002- 29	10 - 23	2	DS 39	M		0					
209-16002- 31	20 - 44	AR	DS39	M		0					
209-16002- 33		1	DS 39	M		0					
209-16002- 34		1	DS 39	M		0					
209-16002- 35		1	DS 39	M		0					
209-16002- 36		1	DS 39	M		0					
209-16002- 37	20 - 13	1	DS 39	P1	0	0	S		R	1560-544-8525	ANAA
209-16002- 38	20	1	DS 39	P1	0	0	S		R	1560-544-8526	ANAA
209-16002- 39		1	DS 39	M		0					
209-16002- 40		1	DS 39	M		0					
209-16002- 41	20 - 12	1	DS 39	P1	0	0	S		R	1560-570-2235	ANAA
209-16002- 42	20	1	DS 39	P1	0	0	S		R	1560-570-2236	ANAA
209-16002- 43	20 - 11	1	DS 39	P1	0	0	S		R	1560-570-2237	ANAA
209-16002- 44	20	1	DS 39	P1	0	0	S		R	1560-570-2238	ANAA
209-16002- 45		1	DS 39	M		0					
209-16002- 46		1	DS 39	M		0					
209-16002- 47		1	DS 39	M		0					
209-16002- 49		1	DS 39	M		0					
209-16002- 50		1	DS 39	M		0					
209-16002- 51	20	1	DS 39	P1	F	0	R		R	1560-348-7379	ANAA
209-16002- 52	20	1	DS 39	P1	F	0	R		R	1560-348-7386	ANAA
209-16002- 61		1	DS 39						R	1560-571-5463	ANAA
209-16002- 62		1	DS 39						R	1560-571-5464	ANAA
209-16002- 71	20	1	DS 39						R	1560-591-9396	ANAA
209-16002- 72	20	1	DS 39						R	1560-591-9397	ANAA
209-16004- 1		1	BP 85	X1							
209-16004- 2		1	BP 85	X1							
209-16004- 3		1	BP 85	M		0					
209-16004- 4		1	BP 85	M		0					
209-16004- 5		1	BP 85	M		0					
209-16004- 6		1	BP 85	M		0					
209-16004- 7		1	BP 85	M		0					
209-16004- 8		1	BP 85	M		0					
209-16004- 9		1	BP 85	M		0					
209-16004- 10		1	BP 85	M		0					
209-16004- 11		1	BP 85	M		0					
209-16004- 12		1	BP 85	M		0					
209-16004- 13		1	BP 85	M		0					
209-16004- 14		1	BP 85	M		0					
209-16004- 15		1	BP 85	M		0					
209-16004- 16		1	BP 85	M		0					
209-16004- 17		1	BP 85	M		0					
209-16004- 18		1	BP 85	M		0					
209-16004- 19		1	BP 85	M		0					
209-16004- 20		1	BP 85	M		0					
209-16004- 21		1	BP 85	M		0					
209-16004- 22		1	BP 85	M		0					
209-16004- 23		2	BP 85	M		0					
209-16004- 25		2	BP 85	M		0					
209-16004- 27		2	BP 85	M		0					
209-16004- 29		2	BP 85	M		0					
209-16004- 31		2	BP 85	M		0					
209-16004- 33		2	BP 85	M		0					
209-16004- 35		2	BP 85	M		0					
209-16004- 37		2	BP 85	M		0					
209-16004- 39		2	BP 85	M		0					
209-16004- 41		2	BP 85	M		0					
209-16004- 43		4	BP 85	M		0					
209-16004- 45		2	BP 85	M		0					
209-16004- 47		2	BP 85	M		0					
209-16004- 49		2	BP 85	M		0					
209-16004- 51		1	BP 85	M		0					
209-16004- 52		1	BP 85	M		0					
209-16004- 53		1	BP 85	M		0					
209-16004- 54		1	BP 85	M		0					
209-16004- 55		1	BP 85	M		0					
209-16004- 56		1	BP 85	M		0					
209-16004-101	20 - 5	1	BP 85	X1							
209-16004-102	20	1	BP 85	X1							
209-16005- 1	20 - 1	1	BP112	P1	F	0	S		R	1560-031-4873	ANAA
209-16005- 2	20	1	BP112	P1	F	0	S		R	1560-031-4874	ANAA
209-16005- 3	20	1	BP112	M		0					
209-16005- 4	20	1	BP112	M		0					
209-16005- 7		1	BP112	M		0					
209-16005- 8		1	BP112	M		0					
209-16005- 9		1	BP112	M		0					
209-16005- 10		1	BP112	M		0					
209-16005- 11		2	BP112	M		0					
209-16005- 13		2	BP112	M		0					
209-16005- 15		6	BP112	M		0					
209-16005- 17		1	BP112	M		0					
209-16005- 18		1	BP112	M		0					
209-16005- 19		1	BP112	M		0					
209-16005- 20		1	BP112	M		0					
209-16005- 21		2	BP112	M		0					
209-16005- 22		2	BP112	M		0					
209-16005- 23		1	BP112	M		0					
209-16005- 24		1	BP112	M		0					
209-16005- 25		2	BP112	M		0					

PART NUMBER	FIGURE AND INDEX	TOTAL QTY.	MICRO-FILM NUMBER	MAINTENANCE CODE DATA: SOURCE CODE	INSTL CAPABILITY	PRE-INSTL CAPABILITY	RECOVERABILITY	SUPPORT EQUIPMENT	FEDERAL STOCK NUMBER DATA: COGNIZANCE CODE	FEDERAL STOCK NUMBER	MFG. CODE (TSMC)
209-16005- 27		2	BP112	M		0					
209-16005- 29		2	BP112	M		0					
209-16005- 31		1	BP112	M		0					
209-16005- 32		1	BP112	M		0					
209-16005- 33		1	BP112	M		0					
209-16005- 34		1	BP112	M		0					
209-16005- 35		1	BP112	M		0					
209-16005- 36		1	BP112	M		0					
209-16005- 37		2	BP112	M		0					
209-16005- 39	20	1	BP112	M		0					
209-16005- 40	20	1	BP112	M		0					
209-16005-101	20	1	BP112	P1		0	S		R	1560-586-4585	ANAA
209-16005-102	20	1	BP112	P1		0	S		R	1560-586-4584	ANAA
209-16006	20 - 1	2	DQ151	P1	0	0	S		R	1560-341-4647	ANAA
209-16006- 1		1	DQ151								
209-16006- 2		1	DQ151								
209-16006- 3		2	DQ151	X1							
209-16006- 5		2	DQ151	X1							
209-16006- 9		2	DQ151	X1							
209-16006- 13		1	DQ151	M		0					
209-16006- 15		2	DQ151	M		0					
209-16006- 17		2	DQ151	X1							
209-16006- 21		2	DQ151	X1							
209-16007	19 - 31	2	BJ175	P	F	0	S		R	1560-031-4875	ANAA
209-16007- 3		2	BJ175	M		0					
209-16007- 5		1	BJ175	M		0					
209-16007- 11	19	1	BJ175						R	1560-574-7986	ANAA
209-16008- 1	20 - 10	1	BJ176	M		0					
209-16008- 2	20	1	BJ176	M		0					
209-16009- 1		1	BU175	X2							
209-16009- 2		1	BU175	X2							
209-16009- 3		1	BU175	X1							
209-16009- 4		1	BU175	X1							
209-16009- 7		1	BU175	X1							
209-16009- 8		1	BU175	X1							
209-16009- 21	20 - 7	1	BU175	X2							
209-16009- 22	20	1	BU175	X2							
209-16010- 1	20 - 6	1	BJ177	M		0					
209-16010- 2	20	1	BJ177	M		0					
209-16013- 1		1	DG301	P1					R	1560-572-7790	ANAA
209-16013- 2		1	DG301	U					R	1560-572-7791	ANAA
209-16014		1	DG314								
209-16016	19 - 9	2	BJ178	P	F	0	S		R	1560-031-4876	ANAA
209-16016- 3		2	BJ178	M		0					
209-16016- 5		1	BJ178	M		0					
209-16016- 11	19	2	BJ178	P	F	0	S		R	1560-574-6100	ANAA
209-16017- 1		1	BP 86	X1							
209-16017- 2		1	BP 86	X1							
209-16018- 1		1	BP120	X1							
209-16018- 2		1	BP120	X1							
209-16020	19 - 4	2	BE376	P	F	0	C		R	1560-569-1230	ANAA
209-16021		1	DG316								
209-16022	19 - 22	4	BE377	M		0					
209-16023	20 - 9	4	BE378	M		0					
209-16024	20	4	BE379	M		0					
209-16025	20 - 8	8	BE380	M		0					
209-16026- 3		1	BE381	M		0					
209-16026- 4		1	BE381	M		0					
209-16027- 1		1	BJ179	M		0					
209-16027- 2		1	BJ179	M		0					
209-16027- 3		1	BJ179	M		0					
209-16027- 4		1	BJ179	M		0					
209-16027- 5		2	BJ179	M		0					
209-16028- 3		1	BJ180	M		0					
209-16028- 4		1	BJ180	M		0					
209-16029- 1		1	BJ181	M		0					
209-16029- 2		1	BJ181	M		0					
209-16029- 3		1	BJ181	M		0					
209-16029- 4		1	BJ181	M		0					
209-16029- 5		2	BJ181	M		0					
209-16030- 1		1	BJ182	M		0					
209-16030- 2		1	BJ182	M		0					
209-16030- 3		1	BJ182	M		0					
209-16030- 4		1	BJ182	M		0					
209-16030- 5		2	BJ182	M		0					
209-16031- 1		1	BJ183	M		0					
209-16031- 2		1	BJ183	M		0					
209-16031- 3		1	BJ183	M		0					
209-16031- 4		1	BJ183	M		0					
209-16031- 5		1	BJ183	M		0					
209-16031- 6		1	BJ183	M		0					
209-16032- 1		1	BE382	M		0					
209-16032- 2		1	BE382	M		0					
209-16032- 3		1	BE382	M		0					
209-16032- 4		1	BE382	M		0					
209-16032- 5		2	BE382	M		0					
209-16033- 1		1	BJ184	M		0					
209-16033- 2		1	BJ184	M		0					
209-16033- 3		1	BJ184	M		0					
209-16033- 4		1	BJ184	M		0					
209-16033- 5		4	BJ184	M		0					
209-16034- 1		1	BJ185	M		0					
209-16034- 2		1	BJ185	M		0					
209-16034- 3		1	BJ185	M		0					
209-16034- 4		1	BJ185	M		0					
209-16034- 5		2	BJ185	M		0					
209-16035- 1		1	BE383	M		0					
209-16035- 2		1	BE383	M		0					
209-16035- 3		1	BE383	M		0					
209-16035- 4		1	BE383	M		0					
209-16035- 5		2	BE383	M		0					
209-16037		1	DG309								
209-16038		1	DG317								
209-16039		1	DG318								
209-16040- 1		1	CE 46	X2							

PART NUMBER	FIGURE AND INDEX	TOTAL QTY.	MICRO-FILM NUMBER	MAINTENANCE CODE DATA: SOURCE CODE	INSTL CAPABILITY	PRE-INSTL CAPABILITY	RECOVERABILITY	SUPPORT EQUIPMENT	FEDERAL STOCK NUMBER DATA: COGNIZANCE CODE	FEDERAL STOCK NUMBER	MFG. CODE (TSMC)
209-16040- 2		1	CE 46	X2							
209-16040- 3		1	CE 46	X1							
209-16040- 4		1	CE 46	X1							
209-16041		1	DG319								
209-16042- 3		1	BP163	X1							
209-16042- 4		1	BP163	X1							
209-16042- 5		1	BP163	X1							
209-16042- 6		1	BP163	X1							
209-16042- 7		1	BP163	X1							
209-16042- 8		1	BP163	X1							
209-16042- 11		1	BP163	X2							
209-16042- 12		1	BP163	X2							
209-16042- 21		1	BP163	X2							
209-16042- 22		1	BP163	X2							
209-16042- 31		1	BP163	X2							
209-16042- 32		1	BP163	X2							
209-16043		1	DH 1								
209-16044		1	DH 2								
209-16045		1	DH -3								
209-16049		1	DH276								
209-16049- 1		1	DH276	M		0					
209-16049- 2		1	DH276	M		0					
209-16049- 3		1	DH276	M		0					
209-16049- 4		1	DH276	M		0					
209-16050		1	DH 4								
209-16051- 1		1	BJ187	M		0					
209-16051- 2		1	BJ187	M		0					
209-16052- 7		1	BJ188	M		0					
209-16052- 8		1	BJ188	M		0					
209-16053		1	DH 5								
209-16054		1	DH 6								
209-16055- 1		1	BP113	M		0					
209-16055- 2		1	BP113	M		0					
209-16056- 1		1	BP108	M		0					
209-16056- 2		1	BP108	M		0					
209-16056- 3		1	BP108	M		0					
209-16056- 4		1	BP108	M		0					
209-16056- 5		2	BP108	M		0					
209-16057- 1		1	BP129	M		0					
209-16057- 2		1	BP129	M		0					
209-16058- 1		1	BP116	M		0					
209-16058- 2		1	BP116	M		0					
209-16059- 1		1	BP119	M		0					
209-16059- 2		1	BP119	M		0					
209-16060- 1		1	BP120	M		0					
209-16060- 2		1	BP120	M		0					
209-16062- 1		1	CM183	M		0					
209-16062- 2		1	CM183	M		0					
209-16063- 1		1	BP 95	M		0					
209-16063- 2		1	BP 95	M		0					
209-16064- 1		1	BP128	M		0					
209-16064- 2		1	BP128	M		0					
209-16065- 2		1	BP126	M		0					
209-16066- 1		1	BP 94	M		0					
209-16066- 2		1	BP 94	M		0					
209-16067- 1		1	BP106	M		0					
209-16067- 2		1	BP106	M		0					
209-16069		1	DH 7								
209-16073- 1		1	BJ189	M		0					
209-16073- 2		1	BJ189	M		0					
209-16074- 1		1	BJ190	M		0					
209-16074- 2		1	BJ190	M		0					
209-16074- 3		1	BJ190	M		0					
209-16074- 4		1	BJ190	M		0					
209-16074- 5		2	BJ190	M		0					
209-16075- 1		1	BJ191	M		0					
209-16075- 2		1	BJ191	M		0					
209-16075- 3		1	BJ191	M		0					
209-16075- 4		1	BJ191	M		0					
209-16075- 5		2	BJ191	M		0					
209-16076- 1		1	BJ192	M		0					
209-16076- 2		1	BJ192	M		0					
209-16076- 3		1	BJ192	M		0					
209-16076- 4		1	BJ192	M		0					
209-16076- 5		2	BJ192	M		0					
209-16077- 1		1	BJ193	M		0					
209-16077- 2		1	BJ193	M		0					
209-16077- 3		1	BJ193	M		0					
209-16077- 4		1	BJ193	M		0					
209-16078- 1		1	BP111	M		0					
209-16078- 2		1	BP111	M		0					
209-16079- 1		1	BP125	M		0					
209-16079- 2		1	BP125	M		0					
209-16080- 1		1	BJ194	M		0					
209-16080- 2		1	BJ194	M		0					
209-16081- 1		1	BJ195	M		0					
209-16081- 2		1	BJ195	M		0					
209-16082- 1		1	BE384	M		0					
209-16082- 2		1	BE384	M		0					
209-16083- 3		1	BE386	M		0					
209-16083- 5		2	BE386	M		0					
209-16084- 3	10 - 20	1	BJ196	M		0					
209-16084- 4	10	1	BJ116	M		0					
209-16085- 1		1	BJ197	M		0					
209-16085- 2		1	BJ197	M		0					
209-16085- 3		1	BJ197	M		0					
209-16085- 4		1	BJ197	M		0					
209-16085- 5		2	BJ197	M		0					
209-16086- 1		1	BR 64	M		0					
209-16086- 2		1	BR 64	M		0					
209-16088- 1	20 - 21	1	DN254	X2							
209-16088- 2	20	1	DN254	X2							
209-16088- 3	20	1	DN254	X1							
209-16088- 4	20	1	DN254	X1							
209-16089- 1	20 - 40	1	DJ198	X2							

PART NUMBER	FIGURE AND INDEX	TOTAL QTY.	MICRO-FILM NUMBER	MAINTENANCE CODE DATA: SOURCE CODE	INSTL CAPABILITY	PRE-INSTL CAPABILITY	RECOVERABILITY	SUPPORT EQUIPMENT	FEDERAL STOCK NUMBER DATA: COGNIZANCE CODE	FEDERAL STOCK NUMBER	MFG. CODE (TSMC)
209-16089- 2	20	1	DJ198	X2							
209-16089- 3	20	1	DJ198	X1							
209-16089- 4	20	1	DJ198	X1							
209-16090- 1	20 - 30	1	DJ199	X2							
209-16090- 2	20	1	DJ199	X2							
209-16090- 3	20	1	DJ199	X1							
209-16090- 4	20	1	DJ199	X1							
209-16091- 1	20 - 32	1	DJ200	X2							
209-16091- 2	20	1	DJ200	X2							
209-16091- 3	20	1	DJ200	X1							
209-16091- 4	20	1	DJ200	X1							
209-16092- 1	20 - 38	1	DQ152	M		O					
209-16092- 2	20	1	DQ152	M		O					
209-16092- 3		1	DQ152	M		O					
209-16092- 4		1	DQ152	M		O					
209-16092- 5		1	DQ152	M		O					
209-16092- 6		1	DQ152	M		O					
209-16092- 11	20	1	DQ152	M		O					
209-16092- 12	20	1	DQ152	M		O					
209-16093- 1	20 - 19	1	DN255	M		O					
209-16093- 2	20	1	DN255	M		O					
209-16093- 3		1	DN255	M		O					
209-16093- 4		1	DN255	M		O					
209-16093- 21	20	1	DN255	M		O					
209-16093- 22	20	1	DN255	M		O					
209-16094- 1	20 - 28	1	DN233	M		O					
209-16094- 2	20	1	DN233	M		O					
209-16094- 3		1	DN233	M		O					
209-16094- 4		1	DN233	M		O					
209-16095- 3		1	BE387	M		O					
209-16095- 4		1	BE387	M		O					
209-17001- 1		1	CN 61								
209-17001- 2		1	CN 61								
209-17001- 5		1	CN 61								
209-17001-101		1	CN 61	U							
209-17001-102		1	CN 61	U							
209-17002- 1		1	BU183	U							
209-17002- 2		1	BU183	U							
209-17004- 1	18 - 92	1	CG258	P1	F	O	S		R	1560-031-4877	ANAA
209-17004- 2	18	1	CG258	P1	F	O	S		R	1560-031-4878	ANAA
209-17004- 3		1	CG258	M		O					
209-17004- 4		1	CG258	M		O					
209-17004- 5		1	CG258	M		O					
209-17004- 6		1	CG258	M		O					
209-17004- 7		1	CG258	M		O					
209-17004- 8		1	CG258	M		O					
209-17004- 9		8	CG258	M		O					
209-17005- 1	18 - 22	1	CK110	P1	F	O	S		R	1560-031-4879	ANAA
209-17005- 2	18	1	CK110	P1	F	O	S		R	1560-031-4880	ANAA
209-17005- 3		1	CK110	M		O					
209-17005- 4		1	CK110	M		O					
209-17005- 5		1	CK110	M		O					
209-17005- 6		1	CK110	M		O					
209-17005- 7		4	CK110	M		O					
209-17005- 8		4	CK110	M		O					
209-17005- 9		4	CK110	M		O					
209-17005- 10		4	CK110	M		O					
209-17005- 11		8	CK110	M		O					
209-17005- 12		1	CK110								
209-17005- 13		12	CK110	M		O					
209-17005- 21	18	1	CK110						R	1560-031-4879	ANAA
209-17005- 22	18	1	CK110						R	1560-031-4880	ANAA
209-17007- 1		1	BP117	X1							
209-17007- 2		1	BP117	X1							
209-17008- 1		1	BP 84	X1							
209-17008- 2		1	BP 84	X1							
209-17010- 3	18 - 93	1	BJ199	P1	O	O	S		R	1560-031-4881	ANAA
209-17010- 4	18	1	BJ199	P1	O	O	S		R	1560-031-4882	ANAA
209-17010- 5		1	BJ199								
209-17010- 6		1	BJ199								
209-17010- 7		1	BJ199								
209-17010- 8		1	BJ199								
209-17010- 9	18 -104	1	BJ199	P1	O	O	S		P	5340-200-4150	ANAA
209-17010- 10	18	1	BJ199	P1	O	O	S		R	1500-000-2271	ANAA
209-17011- 3	18 - 23	1	BP232	P1	F	O	S		R	1560-031-4887	ANAA
209-17011- 4	18	1	BP232	P1	F	O	S		R	1560-031-4888	ANAA
209-17011- 7	18 - 42	1	BP232	P1	F	O	S		R	1560-031-4892	ANAA
209-17011- 8	18	1	BP232	P1	F	O	S		R	1560-031-4892	ANAA
209-17011- 9	18 - 40	1	BP232	P1	F	O	S		R	1560-510-1132	ANAA
209-17011- 10	18	1	BP232	P1	F	O	S		R	1560-510-1131	ANAA
209-17011- 11	18 - 38	1	BP232	P1	F	O	S		R	1560-343-9126	ANAA
209-17011- 12	18	1	BP232	P1	F	O	S		R	1560-343-9127	ANAA
209-17013- 1		1	BJ200	M		O					
209-17013- 2		1	BJ200	M		O					
209-17013- 3		1	BJ200	M		O					
209-17013- 4		1	BJ200	M		O					
209-17013- 5		2	BJ200	M		O					
209-17014- 1		1	BJ201	M		O					
209-17014- 2		1	BJ201	M		O					
209-17014- 3		1	BJ201	M		O					
209-17014- 4		1	BJ201	M		O					
209-17014- 5		2	BJ201	M		O					
209-17015- 1		1	BP105	M		O					
209-17015- 2		1	BP105	M		O					
209-17016- 1		1	BP115	M		O					
209-17016- 2		1	BP115	M		O					
209-17017- 1		1	BP127	M		O					
209-17017- 2		1	BP127	M		O					
209-17018- 1		1	CE 30	M		O					
209-17018- 2		1	CE 30	M		O					
209-17019- 1		1	CB132	M		O					
209-17019- 2		1	CB132	M		O					
209-17020- 1		1	BJ204	M		O					
209-17020- 2		1	BJ204	M		O					
209-17021- 1		1	BJ205	M		O					

PART NUMBER	FIGURE AND INDEX	TOTAL QTY.	MICRO-FILM NUMBER	MAINTENANCE CODE DATA: SOURCE CODE	INSTL CAPABILITY	MI-INSTL CAPABILITY	RECOVERABILITY	SUPPORT EQUIPMENT	FEDERAL STOCK NUMBER DATA: COGNIZANCE CODE	FEDERAL STOCK NUMBER	MFG. CODE (TSMC)
209-17021- 2		1	BJ205	M		O					
209-17022- 1		1	BJ206	M		O					
209-17022- 2		1	BJ206	M		O					
209-17023- 1		1	BJ207	M		O					
209-17023- 2		1	BJ207	M		O					
209-17024- 1		1	CB134	M		O					
209-17024- 2		1	CB134	M		O					
209-17025- 1		1	CB135	M		O					
209-17025- 2		1	CB135	M		O					
209-17025- 3		1	CB135	M		O					
209-17025- 4		1	CB135	M		O					
209-17025- 5		1	CB135	M		O					
209-17025- 6		1	CB135	M		O					
209-17026- 1	10 - 68	1	BE388	M		O					
209-17026- 2		1	BE388								
209-17026- 3	10	1	BE388	M		O					
209-17027- 1	18 - 27	1	BP118	P1	F	O	S		R	1560-544-8531	ANAA
209-17027- 2	18	1	BP118	P1	F	O	S		R	1560-532-0058	ANAA
209-17027- 3	18	1	BP118						R	1560-571-5465	ANAA
209-17027- 4	18	1	BP118						R	1560-571-5465	ANAA
209-17029	18 - 24	4	BJ210	P1	F	O	S		R	1560-532-0070	ANAA
209-17029- 3		4	BJ210								
209-17030	18 - 7 357	2	BX250	M		O					
209-17031- 1	18 - 91	1	BP 83	P1	F	O	S		R	1560-031-4893	ANAA
209-17031- 2	18	1	BP 83	P	F	O	S		R	1560-031-4894	ANAA
209-17031- 3		1	BP 83	M		O					
209-17031- 4		1	BP 83	M		O					
209-17031- 5		1	BP 83	M		O					
209-17031- 6		1	BP 83	M		O					
209-17032- 1	18 - 15	1	BW 96	P	F	O	S		R	1560-031-4895	ANAA
209-17032- 2	18	1	BW 96	P	F	O	S		R	1560-031-4896	ANAA
209-17032- 3		1	BW 96	M		O					
209-17032- 4		1	BW 96	M		O					
209-17034- 1	18 - 82	1	BJ211	M		O					
209-17034- 2	18	1	BJ211	M		O					
209-17034- 3		1	BJ211	M		O					
209-17034- 4		1	BJ211	M		O					
209-17035- 1		1	CA175	M		O					
209-17035- 2		1	CA175	M		O					
209-17036- 3		1	BJ213	X1							
209-17036- 4		1	BJ213	X1							
209-17036- 11	18 - 16 357	1	BJ213	P1	F	O	S		R	1560-031-4897	ANAA
209-17036- 12	18 357	1	BJ213	P1	F	O	S		R	1560-031-4898	ANAA
209-17037	18 - 3	10	BP233	P1	F	O	S		R	1560-031-4899	ANAA
209-17037- 1	357	6	BP233						R	1560-581-5467	ANAA
209-17037- 2	357	4	BP233						R	1560-571-5468	ANAA
209-17037- 3		10	BP233	X1							
209-17040	18 - 56	2	BV241	P1	F	O	S		R	1560-511-1765	ANAA
209-17040- 5		2	BV241	X1							
209-17041- 3		1	BX162	X1							
209-17041- 4		1	BX162	X1							
209-17041- 5		1	BX162	X1							
209-17041- 6		1	BX162	X1							
209-17041- 11	18 - 48	1	BX162	P1	F	O	S		R	1560-031-4900	ANAA
209-17041- 12	18	1	BX162	P1	F	O	S		R	1560-031-4901	ANAA
209-17041- 21	18 - 67	1	BX162	P1	F	O	S		R	1560-031-4902	ANAA
209-17041- 22	18	1	BX162	P1	F	O	S		R	1560-031-4903	ANAA
209-17043	18 - 14 357	2	BX251	M		O					
209-17044- 3		1	BP124	M		O					
209-17044- 4		1	BP124	M		O					
209-17045- 1	4 - 7 357	2	BE392	P	F	O	C		R	1560-569-1255	ANAA
209-17045- 3		10	BE392	X1							
209-17045- 5		2	BE392	M		O					
209-17045- 7		2	BE392	M		O					
209-17045- 9		2	BE392	M		O					
209-17045- 11	18 -103	2	BE392	M		O			R	1560-570-2239	ANAA
209-17045- 13		2	BE392	M		O					
209-17045- 15		2	BE392	M		O					
209-17045- 17		1	BE392	M		O					
209-17045- 19		2	BE392	X1							
209-17045- 21	18 - 36	2	BE392	P	F	O	C		R	1560-570-2240	ANAA
209-17045- 31	18 -113 357	2	BE392	P	F	O	C		R	1560-620-1246	ANAA
209-17045- 32	357	1									
209-17045- 41	4 - 8	2	BE392	P	F	O	C		R	1560-570-2241	ANAA
209-17045- 51	18	2	BE392	P	F	O	C		R	1560-569-1262	ANAA
209-17045- 61	18 357	2	BE392	P	F	O	C		R	1560-569-1263	ANAA
209-17045- 62	357	1									
209-17045- 71	4 - 8 357	2	BE392	P	F	O	C		R	1560-588-6987	ANAA
209-17046- 1		1	BE393	M		O					
209-17046- 2		1	BE393	M		O					
209-17047- 3	18 - 46	2	CB136	M		O					
209-17047- 5	18 - 61	2	CB136	M		O					
209-17047- 7	18 - 62	2	CB136	M		O					
209-17047- 9	18 - 66	2	CB136	M		O					
209-17047- 11	18 - 81	2	CB136	M		O					
209-17048- 3	18 -119 357	1	CB137	P1	F	O	C		R	1560-570-2242	ANAA
209-17048- 4	18 357	1	CB137	P1	F	O	C		R	1560-570-2243	ANAA
209-17048- 5	18 -120	1	CB137	P1	F	O	C		R	1560-570-2244	ANAA
209-17048- 6	18	1	CB137	P1	F	O	C		R	1560-570-2245	ANAA
209-17049	18 - 77	2	BF 2	P1	F	O	S		R	1560-570-2246	ANAA
209-17049- 5		2	BF 2	X1							
209-17050	18 - 50 18 - 69	8	BF 5	M		O					
209-17051		2	BF 4	M		O					
209-17052		2	BF 5	M		O					

PART NUMBER	FIGURE AND INDEX	TOTAL QTY.	MICRO-FILM NUMBER	MAINTENANCE CODE DATA: SOURCE CODE	INSTL CAPABILITY	RE-INSTL CAPABILITY	RECOVERABILITY	SUPPORT EQUIPMENT	FEDERAL STOCK NUMBER DATA: COGNIZANCE CODE	FEDERAL STOCK NUMBER	MFG. CODE (TSMC)
209-17053- 1		1	BJ216	M		O					
209-17053- 2		1	BJ216	M		O					
209-17054- 1		1	BJ217	M		O					
209-17054- 2		1	BJ217	M		O					
209-17055		2	CE101	M		O					
209-17055- 3		2	CE101	M		O					
209-17056- 1		1	BF 6	P1	F	O	C		R	1560-305-4122	ANAA
	10 - 60	1									
209-17056- 2	10	1	BF 6	P1	F	O	C		R	1560-305-4123	ANAA
209-17057		4	BF 7	M		O					
209-17058	18	10	BD 24	M		O					
209-17059- 1	18 -140	1	BR 84	M		O					
	357										
209-17059- 2	18	1	BR 84	M		O					
	357										
209-17060- 1	18 -101	1	DQ169	M		O					
209-17060- 2		1	DQ169	M		O					
209-17061- 1	16 - 48	1	BS246	P1	F	O	S		R	1560-569-1271	ANAA
209-17061- 2	16	1	BS246	P1	F	O	S		R	1560-569-1295	ANAA
209-17062- 1	18 - 95	1	CD 13	M		O					
209-17062- 2	18	1	CD 13	M		O					
209-17063- 1	16 - 29	1	CD 4	M		O					
209-17063- 2	16	1	CD 4	M		O					
209-17117- 5		2		M		F					
209-17501- 1		1	BP171	U							
209-17501- 2		1	BP171	U							
209-17502	4 - 6	1	BH390								
209-17502- 1	5	1	BH390	P1	F	O	S		R	1560-031-4905	ANAA
	171 - 1										
209-17502- 2	5	1	BH390	P1	F	O	S		R	1560-031-4906	ANAA
	171 - 2										
209-17502- 3		1	BH390	M		O					
209-17502- 4		1	BH390	M		O					
209-17502- 5		1	BH390	M		O					
209-17502- 6		1	BH390	M		O					
209-17502- 11	5	1	BH390						R	1560-371-5469	ANAA
	171										
209-17502- 12	5	1	BH390						R	1560-371-5470	ANAA
	171										
209-17503- 1	5 - 1	1	BS 72	X1							
209-17503- 2	5	1	BS 72	X1							
209-17503- 3		1	BS 72	X1							
209-17503- 4		1	BS 72	X1							
209-17503- 5		2	BS 72	X1							
209-17503- 7		2	BS 72	X1							
209-17504- 3	5 - 7	1	BP234	P1	O	O	S		R	1560-031-4907	ANAA
209-17504- 4	5	1	BP234	P	O	O	S		R	1560-031-4908	ANAA
209-17504- 5		1	BP234	P1	F	O	S				
209-17504- 6		1	BP234	P1	F	O	S		R	1560-031-4909	ANAA
209-17505- 1		1	CV 34	M		O					
209-17505- 2		1	CV 34	M		O					
209-17506- 1		1	BJ221	M		O					
209-17506- 2		1	BJ221	M		O					
209-17507- 1		1	CN 55	M		O					
209-17507- 2		1	CN 55	M		O					
209-17508- 1		1	CL309	M		O					
209-17508- 2		1	CL309	M		O					
209-17509- 1		1	CL310	M		O					
209-17509- 2		1	CL310	M		O					
209-17510- 1		1	CN 23	M		O					
209-17510- 2		1	CN 23	M		O					
209-17511- 1	5 - 10	1	BY 22	P	F	O	C		R	1560-031-4910	ANAA
	357										
209-17511- 2	5	1	BY 22	P	F	O	C		R	1560-037-2567	ANAA
	357										
209-17511- 3		1	BY 22	M		O					
209-17511- 4		1	BY 22	M		O					
209-17511- 5		1	BY 22								
209-17511- 6		1	BY 22								
209-17511- 7		1	BY 22								
209-17511- 8		1	BY 22								
209-17511- 9	5 - 17	1	BY 22	M		O					
209-17511- 10	5	1	BY 22	M		O					
209-17511- 11	5 - 10	1	BY 22	P	F	O	C		R	1560-613-3220	ANAA
209-17511- 13		1	BY 22	M		O					
209-17511- 19	5	1	BY 22	M		O					
209-17513	171 - 29	1	BJ226	M		O					
	357										
209-17513- 3		2	BJ226	M		O					
209-17514- 1	171 - 64	1	BJ227	M		O			R	1560-610-5138	ANAA
	357										
209-17514- 3		1	BJ227	M		O					
209-17514- 5		1	BJ227	M		O					
209-17514- 11	171	1	BJ227	M		O			R	1560-610-5137	ANAA
	357										
209-17515- 1	171 - 83	1	CB127	M		O					
	357										
209-17515- 2	171	1	CB127	M		O					
	357										
209-17516- 1	171 - 7	1	CD 12	M		O					
209-17516- 2	171	1	CD 12	M		O					
209-17517- 1	5	1									
209-17517- 2	5	1									
209-17518- 1		1	BJ229	M		O					
209-17518- 2		1	BJ229	M		O					
209-17519- 1		1	BJ230	M		O					
209-17519- 2		1	BJ230	M		O					
209-17520		8	BF 12	M		O					
209-17520- 3	171 - 17	2	BF 12	M		O					
209-17520- 5	171 - 2	6	BF 12	M		O					
	171 - 5										
	171 - 14										
209-17522- 1	171 - 19	1	BF 13	M		O					
209-17522- 2	171	1	BF 13	M		O					
209-17522- 3		1	BF 13	M		O					

PART NUMBER	FIGURE AND INDEX	TOTAL QTY.	MICRO-FILM NUMBER	MAINTENANCE CODE DATA: SOURCE CODE	INSTL CAPABILITY	RE-INSTL CAPABILITY	RECOVERABILITY	SUPPORT EQUIPMENT	FEDERAL STOCK NUMBER DATA: COGNIZANCE CODE	FEDERAL STOCK NUMBER	MFG. CODE (TSMC)
209-17522- 4		1	BF 13	M		O					
209-17523- 1		1	BJ231	M		O					
209-17523- 2		1	BJ231	M		O					
209-17524- 1		4	BJ232	X1					R	1560-031-4911	ANAA
209-17524- 5		2	BJ232	X1							
209-17524- 13	171 - 56	2	BJ232	P1	O	O	S		R	1560-569-1311	ANAA
	357										
209-17524- 15		2	BJ232								
209-17524- 17		2	BJ232								
209-17524- 19	171 - 21	2	BJ232	P1	O	O	S		R	1560-569-1325	ANAA
	357										
209-17524- 23		2	BJ232	X1							
209-17527- 1		1	BF421	M		O					
209-17527- 2		1	BF421	M		O					
209-17528- 1		1	BJ233	M		O					
209-17528- 2		1	BJ233	M		O					
209-17529- 1		1	BJ234	M		O					
209-17529- 2		1	BJ234	M		O					
209-17531	3 - 26	2	CB128	M		O					
	357										
209-17531- 3		2	CB128	M		O					
209-17532	5 - 8	2	BF 15	M		O					
209-17533	5 - 9	2	BF 16	M		O					
209-17534	171 - 4	2	BF 17	M		O					
209-17535	171 - 16	2	BF 18	M		O					
209-17536- 1		1	BF 19	M		O					
209-17536- 2		1	BF 19	M		O					
209-17537- 1	5 - 2	1	BF 20	M		O					
209-17537- 2	5	1	BF 20	M		O					
209-17538- 1	171 - 3	1	BF 21	M		O					
209-17538- 2	171	1	BF 21	M		O					
209-17539- 1	171 - 6	1	BF 22	M		O					
209-17539- 2	171	1	BF 22	M		O					
209-17540- 1	171 - 15	1	BF 23	M		O					
209-17540- 2		1	BF 23	M		O					
209-17541- 1	171 - 18	1	BX252	M		O					
209-17541- 2	171	1	BX252	M		O					
209-17542- 1	171 - 20	1	BF 25	M		O					
209-17542- 2	171	1	BF 25	M		O					
209-18002- 9		1	CN 71	M		O					
209-18002- 10		1	CN 71	M		O					
209-18002- 11		2	CN 71	M		O					
209-18002- 17		2	CN 71	M		O					
209-18002- 19		2	CN 71	M		O					
209-18002- 21		2	CN 71	M		O					
209-18002- 27		2	CN 71	M		O					
209-18002- 37		1	CN 71								
209-18002- 38		1	CN 71								
209-18002- 43		1	CN 71	M		O					
209-18002- 44		1	CN 71	M		O					
209-18002- 45		1	CN 71	M		O					
209-18002- 46		1	CN 71	M		O					
209-18002- 53		1	CN 71	M		O					
209-18002- 54		1	CN 71	M		O					
209-18002- 57		2	CN 71	M		O					
209-18002- 61	21 - 1	1	CN 71	P1	O	O	S		R	1560-569-1327	ANAA
209-18002- 62	21	1	CN 71	P1	O	O	S		R	1560-569-1364	ANAA
209-18002- 63		1	CN 71	M		O					
209-18002- 64		1	CN 71	M		O					
209-18002- 65		2	CN 71	M		O					
209-18002- 67		2	CN 71	M		O					
209-18002- 69		1	CN 71	M		O					
209-18002- 70		1	CN 71	M		O					
209-18002- 71		2	CN 71	M		O					
209-18002- 73		2	CN 71	M		O					
209-18002- 75		2	CN 71	M		O					
209-18002- 77		2	CN 71	M		O					
209-18002- 79		2	CN 71	M		O					
209-18002- 81	21 - 23	1	CN 71	M		F					
209-18002- 82	21	1	CN 71	M		F					
209-18002-101	21	1	CN 71	P1	F	O	R		R	1560-305-4124	ANAA
209-18002-102	21	1	CN 71	P1	F	O	R		R	1560-305-4125	ANAA
209-18002-201	21	1	CN 71	P1	F	O	R		R	1560-338-1006	ANAA
209-18002-202	21	1	CN 71	P1	F	O	R		R	1560-338-1007	ANAA
209-18002-301	21	1	CN 71	U					R	1560-371-5471	ANAA
209-18002-302	21	1	CN 71	U					R	1560-371-5472	ANAA
209-18004- 5	21	1	DP247	M		O					
209-18004- 6	21	1	DP247	M		O					
209-18004- 7	9	1	DP247	M		O					
209-18004- 8	9	1	DP247	M		O					
209-18004- 9		1	DP247	M		O					
209-18004- 10		1	DP247	M		O					
209-18004- 11	21	1	DP247	P1	F	O	R		R	1560-586-4574	ANAA
209-18004- 12	21	1	DP247	P1					R	1560-586-4575	ANAA
209-18004- 13		1	DP247	M		O					
209-18004- 15		1	DP247	M		O					
209-18004- 17		1	DP247	M		O					
209-18004- 19		1	DP247	M		O					
209-18004- 21	21	1	DP247	M		O					
209-18004- 22	21	1	DP247	M		O					
209-18004- 23		1	DP247	M		O					
209-18004- 24		1	DP247	M		O					
209-18004- 25	21	1	DP247	M		O					
209-18004- 29	21	3	DP247	M		O					
209-18004- 33	21	1	DP247	M		O					
209-18004- 35		1	DP247	M		O					
209-18004- 37		1	DP247	M		O					
209-18004- 38		1	DP247	M		O					
209-18004- 39		1	DP247	M		O					
209-18004- 43		2	DP247	M		O					
209-18004- 45		1	DP247	M		O					
209-18004- 47		10	DP247	M		O					
209-18004- 49		4	DP247	M		O					
209-18004- 51		1	DP247	M		O					
209-18004- 52		1	DP247	M		O					

PART NUMBER	FIGURE AND INDEX	TOTAL QTY.	MICRO-FILM NUMBER	MAINTENANCE CODE DATA: SOURCE CODE	INSTL CAPABILITY	PRI-INSTL CAPABILITY	RECOVERABILITY	SUPPORT EQUIPMENT	FEDERAL STOCK NUMBER DATA: COGNIZANCE CODE	FEDERAL STOCK NUMBER	MFG. CODE (TSMC)
209-18004- 53	21	4	DP247	M		O					
209-18004- 55		2	DP247	M		O					
209-18004- 57		1	DP247	M		O					
209-18004- 59		1	DP247	M		O					
209-18004- 60		1	DP247	M		O					
209-18004- 61	10 - 91	1	DP247	M		O					
209-18004- 62	10	1	DP247	M		O					
209-18004- 65		1	DP247	M		O					
209-18004- 67		1	DP247	M		O					
209-18004- 69		1	DP247	M		O					
209-18004- 71		1	DP247	M		O					
209-18004- 73		1	DP247	M		O					
209-18004- 75		1	DP247	M		O					
209-18004- 77		1	DP247	M		O					
209-18004- 78		1	DP247	M		O					
209-18004- 79		1	DP247	M		O					
209-18004- 80		1	DP247	M		O					
209-18004- 81		1	DP247	M		O					
209-18004- 82		1	DP247	M		O					
209-18004- 83		1	DP247	M		O					
209-18004- 85		8	DP247	M		O					
209-18004- 87		1	DP247	M		O					
209-18004- 89		1	DP247	M		O					
209-18004- 91		1	DP247	M		O					
209-18004- 92		1	DP247	M		O					
209-18004- 95		1	DP247	M		O					
209-18005- 1	21 - 7	1	BP103	P1	F	O	S		R	1560-031-4914	ANAA
209-18005- 2	21	1	BP103	P1	F	O	S		R	1560-031-4915	ANAA
209-18005- 3		1	BP103	M		O					
209-18005- 4		1	BP103	M		O					
209-18005- 7		1	BP103	M		O					
209-18005- 8		1	BP103	M		O					
209-18005- 9		1	BP103	M		O					
209-18005- 10		1	BP103	M		O					
209-18005- 25	21 - 10 21 - 65	6	BP103	M		O					
209-18005- 27		1	BP103	M		O					
209-18005- 28		1	BP103	M		O					
209-18005- 29		1	BP103	M		O					
209-18005- 30		1	BP103	M		O					
209-18005- 31		1	BP103	M		O					
209-18005- 32		1	BP103	M		O					
209-18005- 33		2	BP103	M		O					
209-18005- 35	21 - 8	2	BP103	M		O					
209-18005- 37	21	1	BP103	M		O					
209-18005- 38	21	1	BP103	M		O					
209-18005- 39		1	BP103	M		O					
209-18005- 40		1	BP103	M		O					
209-18005- 41		1	BP103	M		O					
209-18005- 42		1	BP103	M		O					
209-18005- 43		1	BP103	M		O					
209-18005- 44		1	BP103	M		O					
209-18005- 45		1	BP103	M		O					
209-18005- 46		1	BP103	M		O					
209-18005- 51		1	BP103	M		O					
209-18005- 52		1	BP103	M		O					
209-18005- 53	21	1	BP103	M		O					
209-18005- 54	21	1	BP103	M		O					
209-18005-101	21	1	BP103	P1	F	O	S		R	1560-338-1008	ANAA
209-18005-102	21	1	BP103	P1	F	O	S		R	1560-338-1009	ANAA
209-18005-201	21 - 64	1	BP103						R	1560-571-5473	ANAA
209-18005-202	21	1	BP103						R	1560-571-5474	ANAA
209-18006		1	DP251								
209-18006- 61		1	DP251								
209-18006- 62		1	DP251								
209-18007- 3	21 - 12	2	DM 83	P1	O	O	S		R	1560-031-4916	ANAA
209-18007- 5	21 - 20	1	DM 83	P1	O	O	S		R	1560-031-4917	ANAA
209-18007- 7	21 - 68	1	DM 83	P1		O	S		R	1560-600-3786	ANAA
209-18008- 7		2	BW166	M		O					
209-18008- 9		2	BW166	M		O					
209-18008- 11		2	BW166	M		O					
209-18008- 13		2	BW166	M		O					
209-18008- 15		2	BW166	M		O					
209-18008- 21		2	BW166								
209-18008- 23		2	BW166	M		O					
209-18008- 25		1	BW166	M		O					
209-18008- 26		1	BW166	M		O					
209-18008- 27		1	BW166	M		O					
209-18008- 28		1	BW166	M		O					
209-18008-101	21 - 2	1	BW166	M		O					
209-18008-102	21	1	BW166	M		O					
209-18009- 1	10 - 76	1	DM163	M		O					
209-18009- 2	10	1	DM163	M		O					
209-18009- 3		1	DM163	M		O					
209-18009- 4		1	DM163	M		O					
209-18010- 1		1	BJ235	P1	F	O	S		R	1560-341-4648	ANAA
209-18010- 2		1	BJ235	P1	F	O	S		R	1560-341-4649	ANAA
209-18010- 3		1	BJ235	X1							
209-18010- 4		1	BJ235	X1							
209-18010- 5		1	BJ235	X1							
209-18010- 6		1	BJ235	X1							
209-18010- 7		2	BJ235	X1							
209-18010- 9		2	BJ235	X1							
209-18010- 11		1	BJ235	X1							
209-18010- 12		1	BJ235	X1							
209-18011- 1	21 - 62	1	DO 52	M		O					
209-18011- 2	21	1	DO 52	M		O					
209-18011- 3		2	DO 52	M		O					
209-18011- 5		2	DO 52	M		O					
209-18011- 9		1	DO 52	M		O					
209-18011- 10		1	DO 52	M		O					
209-18015- 1		1	DP194	M		O					
209-18015- 2		1	DP194	M		O					
209-18016- 1		1	DP195	M		O					
209-18016- 2		1	DP195	M		O					
209-18017- 1		1	DQ 72	M		O					
209-18017- 2		1	DQ 72	M		O					
209-18018- 1		1	DP196	M		O					
209-18018- 2		1	DP196	M		O					
209-18019- 1		1	DQ 73	M		O					
209-18019- 2		1	DQ 73	M		O					
209-18019- 3		1	DQ 73	M		O					
209-18019- 4		1	DQ 73	M		O					
209-18020- 1	21 - 60	1	DN119	M		O					
209-18020- 2	21	1	DN119	M		O					
209-18020- 5		2	DN119	M		O					
209-18020- 7		1	DN119	M		O					
209-18020- 8		1	DN119	M		O					
209-18020- 9		1	DN119	M		O					
209-18020- 10		1	DN119	M		O					
209-18020- 11		1	DN119	M		O					
209-18020- 12		1	DN119	M		O					
209-18020- 13		1	DN119	M		O					
209-18020- 14		1	DN119	M		O					
209-18020- 15		1	DN119	M		O					
209-18020- 16		1	DN119	M		O					
209-18020- 17		1	DN119	M		O					
209-18020- 18		1	DN119	M		O					
209-18020- 21		2	DN119	M		O					
209-18020- 23		2	DN119	M		O					
209-18020- 25		2	DN119	M		O					
209-18020- 27		2	DN119	M		O					
209-18020- 29		2	DN119	M		O					
209-18020- 31		2	DN119	M		O					
209-18020- 33		4	DN119	M		O					
209-18020- 35		4	DN119	M		O					
209-18020- 37		2	DN119	M		O					
209-18020- 39		1	DN119	M		O					
209-18020- 40		1	DN119	M		O					
209-18020- 41		1	DN119	M		O					
209-18020- 51	21 - 60	1	DN119	M		O					
209-18020- 52	21	1	DN119	M		O					
209-18021- 1	21 - 63	1	DN129	M		O					
209-18021- 2	21	1	DQ129	M		O					
209-18021- 3		1	DQ129	M		O					
209-18021- 4		1	DQ129	M		O					
209-18021- 5		1	DQ129	M		O					
209-18021- 6		1	DQ129	M		O					
209-18021- 7		1	DQ129	M		O					
209-18021- 8		1	DQ129	M		O					
209-18021- 9		6	DQ129	M		O					
209-18021- 11		2	DQ129	M		O					
209-18021- 13		2	DQ129	M		O					
209-18021- 15		2	DQ129	M		O					
209-18021- 17		4	DQ129	M		O					
209-18022	21 - 84 21 -105	4	DL332	X1							
209-18022- 3		4		X1							
209-18023		2	DQ 12	M		O					
209-18023- 3		2	DQ 12	M		O					
209-18026		2	DQ 2	M		O					
209-18027- 3		1	BW 85	M		O					
209-18027- 4		1	BW 85	M		O					
209-18028- 3	21 - 72	1	DN194	M		O					
209-18028- 4	21	1	DN194	M		O					
209-18030- 3	10 - 85	1	DQ 51	P1		O	C				
209-18030- 4	10 - 86	1	DQ 51	P1		O	C				
209-18030- 5	10	1	DQ 51	P1		O	C				
209-18030- 6	10	1	DQ 51	P1		O	C				
209-18031- 1		1	DP197	M		O					
209-18031- 2		1	DP197	M		O					
209-18031- 3		1	DP197	M		O					
209-18031- 4		1	DP197	M		O					
209-18031- 5		2	DP197	M		O					
209-18032- 3		1	DP198	M		O					
209-18032- 4		1	DP198	M		O					
209-18033- 1		1	DP199	M		O					
209-18033- 2		1	DP199	M		O					
209-18034- 3		1	DP200	M		O					
209-18034- 4		1	DP200	M		O					
209-18035- 5		1	DQ265	M		O					
209-18035- 6		1	DQ265	M		O					
209-18036- 1		1	DQ 54	M		O					
209-18036- 2		1	DQ 54	M		O					
209-18037- 5		1	DQ266	M		O					
209-18037- 6		1	DQ266	M		O					
209-18038- 3	21 - 88 21 -109	2	DQ267								
209-18039	10	1	BJ241								
209-18039- 1	21	1	BJ241	M		O					
209-18039- 2	21	1	BJ241	M		O					
209-18039- 3		2	BJ241	M		O					
209-18039- 5		2	BJ241	M		O					
209-18039- 11		1	BJ241	M		O					
209-18039- 12		1	BJ241	M		O					
209-18044- 3		1	BJ242	M		O					
209-18044- 4		1	BJ242	M		O					
209-18045- 1		1	DP204	M		O					
209-18045- 2		1	DP204	M		O					
209-18046- 9		1	BW123	M		O					
209-18046- 10		1	BW123	M		O					
209-18046- 13		1	BW123	M		O					
209-18046- 14		1	BW123	M		O					
209-18046- 23		1	BW123	M		O					
209-18046- 24		1	BW123	M		O					
209-18046- 25		1	BW123	M		O					
209-18046- 26		1	BW123	M		O					
209-18046- 27		1	BW123	X1							
209-18046- 28		1	BW123	X1							
209-18046- 29		1	BW123	M		O					

PART NUMBER	FIGURE AND INDEX	TOTAL QTY.	MICRO-FILM NUMBER	MAINTENANCE CODE DATA: SOURCE CODE	INSTL CAPABILITY	PR.INSTL CAPABILITY	RECOVERABILITY	SUPPORT EQUIPMENT	FEDERAL STOCK NUMBER DATA: COGNIZANCE CODE	FEDERAL STOCK NUMBER	MFG. CODE (TSMC)
209-18046- 30		1	BW123	M		O					
209-18046- 33		1	BW123	M		O					
209-18046- 34		1	BW123	M		O					
209-18046-101	21 - 5	1	BW123	P1	O	O	S		R	1560-544-8538	ANAA
209-18046-102	21	1	BW123	P1	O	O	S		R	1560-569-1965	ANAA
209-18046-201		1	BW123	U					R	1560-571-5475	ANAA
209-18046-202		1	BW123	U					R	1560-571-5476	ANAA
209-18047- 11		1	BW125	M		O					
209-18047- 12		1	BW125	M		O					
209-18047- 19		1	BW125	M		O					
209-18047- 20		1	BW125	M		O					
209-18047- 23		1	BW125	M		O					
209-18047- 24		1	BW125	M		O					
209-18047- 25		1	BW125	M		O					
209-18047- 26		1	BW125	M		O					
209-18047- 27		1	BW125	M		O					
209-18047- 28		1	BW125	M		O					
209-18047- 29		1	BW125	X1							
209-18047- 30		1	BW125	X1							
209-18047-101	21 - 4	1	BW125	P1	O	O	S		R	1560-511-1818	ANAA
209-18047-102	21	1	BW125	P1	O	O	S		R	1560-511-1838	ANAA
209-18047-201		1	BW125	U					R	1560-571-5477	ANAA
209-18047-202		1	BW125	U					R	1560-571-5478	ANAA
209-18048		38	BD 25	M		O					
209-18049		13	BD 26	M		O					
209-18050- 1		3	DQ 49	X1					R	1560-031-4918	ANAA
209-18050- 2		3	DQ 49	X1					R	1560-031-4919	ANAA
209-18050- 9	21 - 13	1	DQ 49	P1	O	O	S		R	1560-544-8540	ANAA
209-18050- 10	21	1	DQ 49	P1	O	O	S		R	1560-569-1373	ANAA
209-18050- 11	21 - 16	1	DQ 49	P1	O	O	S		R	1560-569-1424	ANAA
209-18050- 12	21	1	DQ 49	P1	O	O	S		R	1560-569-1426	ANAA
209-18050- 13	21	1	DQ 49	P1	O	O	S		R	1560-569-1429	ANAA
209-18050- 14	21 - 18	1	DQ 49	P1	O	O	S		R	1560-569-1430	ANAA
209-18050- 15	21 -123	1	DQ 49	P1	O	O	S		R	1560-611-5922	ANAA
209-18050- 16	21	1	DQ 49	P1	O	O	S		R	1560-611-5923	ANAA
209-18050- 17	21 -124	1	DQ 49	P1	O	O	S		R	1560-611-5924	ANAA
209-18050- 18	21	1	DQ 49	P1	O	O	S		R	1560-611-5925	ANAA
209-18050- 19	21 -125	1	DQ 49	P1	O	O	S		R	1560-611-5926	ANAA
209-18050- 20	21	1	DQ 49	P1	O	O	S		R	1560-611-5927	ANAA
209-18051- 1		2	DP167	M		O					
209-18051- 2		2	DP167	M		O					
209-18052- 1		1	DQ 94	M		O					
209-18052- 2		1	DQ 94	M		O					
209-18053- 1		1	BD 29	M		O					
209-18053- 2		1	BD 29	M		O					
209-18054- 1		1	DQ 96	M		O					
209-18054- 2		1	DQ 96	M		O					
209-18063- 1	10 - 29	1	DQ 44	M		O					
209-18063- 2	10	1	DQ 44	M		O					
209-18063- 3		1	DQ 44	M		O					
209-18063- 4		1	DQ 44	M		O					
209-18063- 5		1	DQ 44	M		O					
209-18064- 1	10 - 24	1	DQ 45	M		O					
209-18064- 2	10	1	DQ 45	M		O					
209-18064- 3		1	DQ 45	M		O					
209-18064- 4		1	DQ 45	M		O					
209-18064- 5		4	DQ 45	M		O					
209-18067- 3		2	DN204	M		O					
209-18067- 4		1	DN204	M		O					
209-18067- 5		1	DN204	M		O					
209-18067- 6		1	DN204	M		O					
209-18069- 1		1	DP205	M		O					
209-18069- 2		1	DP205	M		O					
209-18070- 1		1	DP206	M		O					
209-18070- 2		1	DP206	M		O					
209-18071- 1		1	DP207	M		O					
209-18071- 2		1	DP207	M		O					
209-18072- 1		1	DP208	M		O					
209-18072- 2		1	DP208	M		O					
209-18073- 1		1	DP209	M		O					
209-18073- 2		1	DP209	M		O					
209-18074- 1		1	DP210	M		O					
209-18074- 2		1	DP210	M		O					
209-18075- 1		1	DP211	M		O					
209-18075- 2		1	DP211	M		O					
209-18076		2	DQ 13	M		O					
209-18077- 1		1	DP178	M		O					
209-18077- 2		1	DP178	M		O					
209-18079- 1		1	DP168	M		O					
209-18079- 2		1	DP168	M		O					
209-18080- 1		1	DP169	M		O					
209-18080- 2		1	DP169	M		O					
209-18081- 1		1	DP170	M		O					
209-18081- 2		1	DP170	M		O					
209-18082- 1		1	DP171	M		O					
209-18082- 2		1	DP171	M		O					
209-18085- 1		1	DP271	M		O					
209-18085- 2		1	DP271	M		O					
209-18085- 3		1	DP271	M		O					
209-18085- 4		1	DP271	M		O					
209-18086- 1		1	DP272	M		O					
209-18086- 2		1	DP272	M		O					
209-18086- 3		1	DP272	M		O					
209-18086- 4		1	DP272	M		O					
209-18088- 3		2	DP179	M		F					
209-18088- 5		2	DP179	M		F					
209-18088- 7		2	DP179	M		F					
209-18089		2	DQ 14	M		F					
209-18090	178 - 90	1	BP298								
209-18090- 1	21	1	BP298	A		O					
209-18090- 2	21	1	BP298	A		O					
209-18091- 1		1	BN 84								
209-18091- 2		1	BN 84								
209-18091- 3		1	BN 84	M		O					
209-18091- 4		1	BN 84	M		O					
209-18091- 5		2	BN 84	M		O					
209-18091- 7		2	BN 84	M		O					
209-18091- 9		2	BN 84	M		O					
209-18091- 11		10	BN 84	M		O					
209-18091- 13		1	BN 84								
209-18091- 14		1	BN 84								
209-18091- 15		1	BN 84								
209-18091- 16		1	BN 84								
209-18091- 17		2	BN 84	M		O					
209-18091- 19		1	BN 84	M		O					
209-18091- 20		1	BN 84	M		O					
209-18091- 23		2	BN 84	M		O					
209-18091- 25		1	BN 84	M		O					
209-18091- 26		1	BN 84	M		O					
209-18091- 27		2	BN 84	M		O					
209-18091- 29		2	BN 84	M		O					
209-18091- 31		2	BN 84	M		O					
209-18091- 33		2	BN 84	M		O					
209-18091-101	21 - 6	1	BN 84	M		O					
209-18091-102	21	1	BN 84	M		O					
209-18091-201	21 - 6	1	BN 84	M		O					
209-18091-202	21	1	BN 84	M		O					
209-18092- 1		2	DP180	M		O					
209-18092- 2		2	DP180	M		O					
209-18092- 3		1	DP180	M		O					
209-18092- 4		1	DP180	M		O					
209-18092- 5		1	DP180	M		O					
209-18092- 6		1	DP180	M		O					
209-18092- 7		1	DP180	M		O					
209-18092- 8		1	DP180	M		O					
209-18092- 9		1	DP180	M		O					
209-18092- 10		1	DP180	M		O					
209-18093- 3	21 - 17	2	DQ 15	P1	F	O	S		R	5340-570-2247	ANAA
	21 -126										
209-18093- 5	21 - 15	2	DQ 15	P1	F	O	S		R	5340-570-2248	ANAA
	21 -127										
209-18093- 7	21 - 14	2	DQ 15	P1	F	O	S		R	1560-570-2249	ANAA
	21 -128										
209-18094	19 - 76	12	BD 36	P1	F	O	C		R	1560-570-2250	ANAA
209-18095- 1		1	DQ 74	M		O					
209-18095- 2		1	DQ 74	M		O					
209-18096- 1		1	DQ 75	M		O					
209-18096- 2		1	DQ 75	M		O					
209-18098- 1		1	DQ 16	M		O					
209-18098- 2		1	DQ 16	M		O					
209-18099- 1	21	1	DP 16	P1	F	O	S		R	1560-341-4650	ANAA
209-18099- 2	21	1	DP 16	P1	F	O	S		R	1560-341-4651	ANAA
209-18099- 3		1	DP 16	X1							
209-18099- 4		1	DP 16	X1							
209-18099- 5		1	DP 16	X1							
209-18099- 6		1	DP 16	X1							
209-18099- 7		2	DP 16	X1							
209-18099- 9		2	DP 16	X1							
209-18099- 11		1	DP 16	X1							
209-18099- 12		1	DP 16	X1							
209-18099- 13		1	DP 16	X1							
209-18099- 14		1	DP 16	X1							
209-18099- 21	21	1	DP 16	X1					R	1560-571-5479	ANAA
209-18099- 22	21	1	DP 16						R	1560-571-5480	ANAA
209-18101- 3	19 - 64	6		M		F					
209-18101- 4	19 - 61	6		M		F					
209-18102	19 - 63	6		P	F	O	C		R	1560-511-1848	ANAA
209-18103- 3	21 - 31	1	BQ143	P1		O	S		R	1560-657-3147	ANAA
209-18103- 4	21	1	BQ143	P1		O	S		R	1560-657-3148	ANAA
209-18104- 3	21 - 33	1	DM176	X2							
	21 -149										
209-18104- 4	21	1	DM176	X2							
209-18105- 1	21	1	DN135	A		O					
209-18105- 2	21	1	DN135	A		O					
209-18105- 3		1	DN135	M		O					
209-18105- 4		1	DN135	M		O					
209-18105- 5	21 - 32	1	DN135	P1	O	O	C		R	1560-511-1849	ANAA
	21 -148										
209-18105- 6	21	1	DN135	P1	O	O	C		R	1560-511-1851	ANAA
209-18106- 1		1	DS 1								
209-18106- 2		1	DS 1								
209-18106- 3	21 -135	1	DS 1	M		O					
209-18106- 4	21	1	DS 1	M		O					
209-18107- 3		1	DQ269								
209-18107- 4		1	DQ269								
209-18107- 5		1	DQ269								
209-18107- 7		1	DQ269								
209-18107- 9		1	DQ269								
209-18107- 11	21 -122	1	DQ269								
209-18107- 12	21	1	DQ269								
209-18107- 13	21 -117	1	DQ269								
209-18107- 15	21 - 96	1	DQ269								
	21 - 99										
209-18107- 17		1	DQ269								
209-18108- 1		1	DN136	M		O					
209-18108- 2		1	DN136	M		O					
209-18108- 3		1	DN136	M		O					
209-18108- 4		1	DN136	M		O					
209-18109- 3		1	DP214	M		O					
209-18109- 4		1	DP214	M		O					
209-18110- 3		2	DR 87	M		O					
209-18110- 5		2	DR 87	M		O					
209-18110- 7		2	DR 87	M		O					
209-18111- 1		1	BF 32	M		O					
209-18111- 2		1	BF 32	M		O					
209-18112- 3		1	DQ 50	X1							
209-18112- 4		1	DQ 50	X1							
209-18112- 5		1	DQ 50	X1							
209-18112- 6		1	DQ 50	X1							
209-18112- 9		1	DQ 50	X1							

PART NUMBER	FIGURE AND INDEX	TOTAL QTY.	MICRO-FILM NUMBER	MAINTENANCE CODE DATA: SOURCE CODE	INST'L CAPABILITY	PRE-INST'L CAPABILITY	RECOVERABILITY	SUPPORT EQUIPMENT	FEDERAL STOCK NUMBER DATA: COGNIZANCE CODE	FEDERAL STOCK NUMBER	MFG. CODE (TSMC)
209-18112- 10		1	DO 50	X1							
209-18112- 11		1	DO 50	X2							
209-18112- 12		1	DO 50	X2							
209-18112- 21		1	DO 50	X2							
209-18112- 22		1	DO 50	X2							
209-18112- 31		1	DO 50	X2							
209-18112- 32		1	DO 50	X1							
209-18113- 1	21	1	BP156	M		O					
209-18113- 2	21	1	BP156	M		O					
209-18113- 3		1	BP156	M		O					
209-18113- 4		1	BP156	M		O					
209-18113- 5	21 - 9	1	BP156	M		O					
209-18113- 7		2	BP156	M		O					
209-18114- 1		1	DP215	M		O					
209-18114- 2		1	DP215	M		O					
209-18115- 1	21 - 25	1	DO 17	M		O					
209-18115- 2	21	1	DO 17	M		O					
209-18115- 3	21 -131	1	DO 17	M		O					
209-18115- 4	21	1	DO 17	M		O					
209-18116- 1		1	BJ261	M		O					
209-18116- 2		1	BJ261	M		O					
209-18116- 5		2	BJ261	M		O					
209-18116- 7		1	BJ261	M		O					
209-18116- 8		1	BJ261	M		O					
209-18117- 1	21 - 22	1	DR116	M		O					
209-18117- 2	21	1	DR116	M		O					
209-18117- 3		2	DR116	M		O					
209-18117- 5		1	DR116	M		O					
209-18117- 7		2	DR116	M		O					
209-18117- 9		2	DR116	M		O					
209-18117- 11	21 -133	1	DR116	M		O					
209-18117- 12	21	1	DR116	M		O					
209-18117- 13		2	DR116	M		O					
209-18117- 15		2	DR116	M		O					
209-18117- 17		2	DR116	M		O					
209-18118- 1	21 - 21	1	DQ116	M		O					
209-18118- 2	21	1	DQ116	M		O					
209-18118- 3		2	DQ116	M		O					
209-18118- 5		2	DQ116	M		F					
209-18118- 7		2	DQ116	M		O					
209-18118- 9		2	DQ116	M		O					
209-18118- 11		1	DQ116	M		O					
209-18118- 12		1	DQ116	M		O					
209-18118- 13		2	DQ116	M		O					
209-18118- 14		1	DQ116	M		O					
209-18118- 21	21 -132	1	DQ116	M		O					
209-18118- 22	21	1	DQ116	M		O					
209-18119- 1	21 - 24 21 -134	1	DO 18	M		O					
209-18119- 2	21 21	1	DO 18	M		O					
209-18120- 3		2	DO 19	M		O					
209-18121	21 - 81 21 -102	2		M		O					
209-18122- 3		1	DO 46	M		O					
209-18122- 4		1	DO 46	M		O					
209-18122- 11		1	DO 46	M		O					
209-18122- 12		1	DO 46	M		O					
209-18123- 1		1	DQ270								
209-18123- 2		1	DQ270								
209-18123- 3	21 -130	1	DQ270	M		O					
209-18123- 4	21	1	DQ270	M		O					
209-18124	21 - 86 21 -107	32	DO 3	M		O					
209-18125		1	DO 53								
209-18126- 1		1	DQ131	X1							
209-18126- 2		1	DQ131	X1							
209-18127	21	4	OL339	P1					R	1560-587-4104	ANAA
209-18128- 3	21 - 74	2	DP217	M		O					
209-18128- 5	21 - 78	2	DP217	M		O					
209-18128- 7	21 - 76	2	DP217	M		O					
209-18128- 9	21 - 75 21 - 77	4	DP217	M		O					
209-18129- 5		1	DN198	X1							
209-18129- 6		1	DN198	X1							
209-18129- 7		1	DN198	X1							
209-18129- 8		1	DN198	X1							
209-18130- 1		1	DP218	M		O					
209-18130- 2		1	DP218	M		O					
209-18130- 3		1	DP218	M		O					
209-18130- 4		1	DP218	M		O					
209-18130- 5		2	DP218	M		O					
209-18131- 3		1	DO 21	M		O					
209-18131- 4		1	DO 21	M		O					
209-18131- 5		1	DO 21	M		O					
209-18131- 6		1	DO 21	M		O					
209-18132- 3		1	DQ130	X1							
209-18132- 4		1	DQ130	X1							
209-18133- 13		1	DP219	M		O					
209-18133- 14		1	DP219	M		O					
209-18133- 15		1	DP219	M		O					
209-18133- 16		1	DP219	M		O					
209-18133- 17		1	DP219	M		O					
209-18133- 18		1	DP219	M		O					
209-18133- 19		1	DP219	M		O					
209-18133- 20		1	DP219	M		O					
209-18134- 5		1	DP220	M		O					
209-18134- 6		1	DP220	M		O					
209-18135- 1	10 -104	1	DP221	M		O					
209-18135- 2		1	DP221	M		O					
209-18135- 3		1	DP221	M		O					
209-18135- 4		1	DP221	M		O					
209-18135- 5		2	DP221	M		O					
209-18136- 5		2	DP 70	M		O					
209-18136- 7		1	DP 70	M		O					
209-18136- 8		1	DP 70	M		O					
209-18136- 11	10 -111	1	DP 70	M		O					
209-18136- 12	10	1	DP 70	M		O					
209-18137- 3		1	DP222	M		O					
209-18137- 4		1	DP222	M		O					
209-18138- 3		1	DO 47	M		O					
209-18138- 4		1	DO 47	M		O					
209-18139		2	DP181	M		O					
209-18140- 1		1	DP273	M		O					
209-18140- 2		1	DP273	M		O					
209-18141- 5		1	DR 58	M		O					
209-18141- 6		1	DR 58	M		O					
209-18142- 9		2	DQ271	M		O					
209-18142- 11		2	DQ271	M		O					
209-18142- 13		2	DQ271	M		O					
209-18143		1	DN212								
209-18143- 5		2	DN212	M		O					
209-18143- 7		1	DN212	M		O					
209-18143- 8		1	DN212	M		O					
209-18143- 11	10 - 98	1	DN212	M		O					
209-18143- 12	10	1	DN212	M		O					
209-18144- 5		1	DR 59	M		O					
209-18144- 6		1	DR 59	M		O					
209-18145- 3		1	DN213	M		O					
209-18145- 4		1	DN213	M		O					
209-18146- 7		1	DQ272	M		O					
209-18146- 8		1	DQ272	M		O					
209-18146- 9		1	DQ272	M		O					
209-18146- 10		1	DQ272	M		O					
209-18147- 1		1	DO 48	M		O					
209-18147- 2		1	DO 48	M		O					
209-18148- 1		1	DP225	M		O					
209-18148- 2		1	DP225	M		O					
209-18149- 1		1	DP226	M		O					
209-18149- 2		1	DP226	M		O					
209-18150- 3		1	DP227	M		O					
209-18150- 4		1	DP227	M		O					
209-18151- 3	21 -141	1		P1	O	O	S		R	1560-575-6327	ANAA
209-18151- 4	21	1	DP252	P1	O	O	S		R	1560-575-6328	ANAA
209-18152- 1	10 -116	1	DN215	M		O					
209-18152- 2	10	1	DN215	M		O					
209-18152- 3		1	DN215	M		O					
209-18152- 4		1	DN215	M		O					
209-18152- 5		2	DN215	M		O					
209-18153- 3	21	2	DP228	M		O					
209-18153- 5	21	2	DP228	M		O					
209-18154- 5		1	DQ273	M		O					
209-18154- 6		1	DQ273	M		O					
209-18155- 3		2	DP131	M		O					
209-18155- 5		2	DP131	M		O					
209-18155- 7		2	DP131	M		O					
209-18155- 9		2	DP131	M		O					
209-18155- 11		2	DP131	M		O					
209-18155- 13		2	DP131	M		O					
209-18155- 15		2	DP131	M		O					
209-18156- 1		2	DP230	M		O					
209-18156- 2		2	DP230	M		O					
209-18156- 3		1	DP230	M		O					
209-18156- 4		1	DP230	M		O					
209-18156- 5		1	DP230	M		O					
209-18156- 6		1	DP230	M		O					
209-18156- 7		1	DP230	M		O					
209-18156- 8		1	DP230	M		O					
209-18156- 9		1	DP230	M		O					
209-18156- 10		1	DP230	M		O					
209-18157- 1		1	DP 71	M		O					
209-18157- 2		1	DP 71	M		O					
209-18158- 3		1	DP231	M		O					
209-18158- 4		1	DP231	M		O					
209-18159- 3		1	DP232	M		O					
209-18159- 4		1	DP232	M		O					
209-18160- 3		2	DO 22	M		O					
209-18160- 5		2	DO 22	M		O					
209-18161- 5		1	DQ274	M		O					
209-18161- 6		1	DQ274	M		O					
209-18162- 3	21 -130	1	DP257	P1	O	O	S		R	1560-575-6325	ANAA
209-18162- 4	21	1	DP257	P1	O	O	S		R	1560-575-6326	ANAA
209-18163- 5		1	DO 4	M		O					
209-18163- 6		1	DO 4	M		O					
209-18164- 3		1	DP234	M		O					
209-18164- 4		1	DP234	M		O					
209-18165- 5		1	DR 60	M		O					
209-18165- 6		1	DR 60	M		O					
209-18166- 3	21 -122	1	DP258	P1	O	O	S		R	1560-575-6329	ANAA
209-18166- 4	21	1	DP258	P1	O	O	S		R	1560-575-6330	ANAA
209-18166- 5	21 -117	1	DP258	P1	O	O	S		R	1560-575-6331	ANAA
209-18166- 7	21 - 99	1	DP258	P1	O	O	S		R	1560-575-6332	ANAA
209-18166- 9	21 - 96	1	DP258	P1	O	O	S		R	1560-575-6333	ANAA
209-18167- 3	21 - 88 21 -109	4	DP264	P1					R	1680-574-7984	ANAA
209-18168- 1	21	1	DP254								
209-18168- 2	21	1	DP254								
209-18169		1	DP184								
209-18169- 3		4	DP184	M		O					
209-18169- 5		4	DP184	M		O					
209-18169- 7		2	DP184	M		O					
209-18169- 9		2	DP184	M		O					
209-18169- 13		2	DP184	M		O					
209-18170		2	DP185	M		O					
209-18191		2	DP172	M		O					
209-18192- 1		1	DP235	M		O					
209-18192- 2		1	DP235	M		O					
209-18193- 1		1	DP236	M		O					
209-18193- 2		1	DP236	M		O					
209-18194- 3		1	DO 76	M		O					

PART NUMBER	FIGURE AND INDEX	TOTAL QTY.	MICRO-FILM NUMBER	MAINTENANCE CODE DATA: SOURCE CODE	INSTL CAPABILITY	PRE-INSTL CAPABILITY	RECOVERABILITY	SUPPORT EQUIPMENT	FEDERAL STOCK NUMBER DATA: COGNIZANCE CODE	FEDERAL STOCK NUMBER	MFG. CODE (TSMC)
209-18194- 4		1	DO 76	M		O					
209-18194- 5		1	DO 76	M		O					
209-18194- 6		1	DO 76	M		O					
209-18195		2	DP173	M		O					
209-18196- 1		1	DP274	M		O					
209-18196- 2		1	DP274	M		O					
209-18196- 3		1	DP274	M		O					
209-18196- 4		1	DP274	M		O					
209-18197- 1		1	DO 77	M		O					
209-18197- 2		1	DO 77	M		O					
209-18197- 3		1	DO 77	M		O					
209-18197- 4		1	DO 77	M		O					
209-18198- 1	10 - 34	1	DP237	M		O					
209-18198- 2	10	1	DP237	M		O					
209-18198- 3		1	DP237	M		O					
209-18198- 4		1	DP237	M		O					
209-18198- 5		2	DP237	M		O					
209-18199- 1		1	DP238	M		O					
209-18199- 2		1	DP238	M		O					
209-18200- 1		1	DP275	M		O					
209-18200- 2		1	DP275	M		O					
209-18200- 3		1	DP275	M		O					
209-18200- 4		1	DP275	M		O					
209-183173	13 -134	1									
	13 -144										
209-18501- 1	21 - 34	1	BQ213	P1	F	O	C		R	1560-031-4920	ANAA
209-18501- 2	21	1	BQ213	P1	F	O	C		R	1560-031-4921	ANAA
209-18501-101	21	1	BQ213						R	1560-572-7792	ANAA
209-18501-102	21	1	BQ213						R	1560-572-7793	ANAA
209-18502		2	BF 35	M		O					
209-18506- 3		2	BF 36	M		O					
209-18506- 4		2	BF 36	M		O					
209-18510- 3		1	BV242	M		O					
209-18510- 4		1	BV242	M		O					
209-18511- 3		2	BQ207	X1							
209-18511- 5		2	BQ207	X1							
209-18511- 7		2	BQ207	X1							
209-18511- 21	21 - 45	1	BQ207	P1	O	O	S		R	1560-031-4922	ANAA
209-18511- 31	21 - 41	1	BQ207	P1	O	O	S		R	1560-031-4923	ANAA
209-18511- 41	21 - 37	1	BQ207	P1	O	O	S		R	1560-031-4924	ANAA
209-18513- 3		2	BV240	M		O					
209-18513- 4		2	BV240	M		O					
209-18516- 3		1	BF 39	M		O					
209-18516- 4		1	BF 39	M		O					
209-18517- 3		2	BF 40	M		O					
209-18517- 4		2	BF 40	M		O					
209-18519- 3		1	BF 41	M		O					
209-18519- 4		1	BF 41	M		O					
209-18520- 1	21	1	BQ203	M		O					
209-18520- 2	21	1	BQ203	M		O					
209-18520- 3		2	BQ203	M		O					
209-18520- 5		2	BQ203	M		O					
209-18521- 1	21 - 49	1	BP280	P1	O	O	S		R	1560-511-1860	ANAA
209-18521- 2	21	1	BP280	P1	O	O	S		R	1560-511-1861	ANAA
209-18521- 3		1	BP280								
209-18521- 4		1	BP280								
209-18521- 5		1	BP280								
209-18521- 6		1	BP280								
209-18521- 7		2	BP280	X1							
209-18521- 9		1	BP280	X1							
209-18521- 10		1	BP280	X1							
209-18521- 11		1	BP280	M		O					
209-18523	21	2	BD 37	M		O					
209-18524	21	2	BD 38	M		O					
209-18525- 1	21 - 50	2	BP296	M		O					
209-18525- 3	21 - 51	1	BP296	M		O					
209-18525- 4	21	1	BP296	M		O					
209-18525- 5	21 - 52	1	BP296	M		O					
209-18525- 6	21	1	BP296	M		O					
209-18525- 7	21 - 43	2	BP296	M		O					
209-18525- 9	21	1	BP296	M		O					
209-18525- 10	21	1	BP296	M		O					
209-18526- 3	21 - 59	6	BP290	X2							
209-18527- 3		3	BP274								
209-18527- 4		3	BP274								
209-18527- 11		3	BP274								
209-18527- 12		3	BP274								
209-18527- 21	19	2	DP274	P1	O	O	S		R	1560-305-4126	ANAA
209-18527- 22	19 - 66	3	BP274	P1	O	O	S		R	1560-305-4127	ANAA
209-18527- 23		3	BP274	X1							
209-18527- 24		3	BP274	X1							
209-18528	19 - 54	3	BJ272	P1	F	O	S		R	1560-511-1863	ANAA
209-18528- 3		6	BJ272	X1							
209-18529		6									
209-18530		6									
209-18531		6									
209-18532- 3		12									
209-18532- 5		6									
209-18533		6									
209-18539		6	BF 42								
209-18540		6	BJ273	A		F					
209-18540- 11	19	6	BJ273	A		F					
209-185527- 22		1									
209-20001		1	DS 16	U							
209-21003	69	2	DS 11	A		F					
	182										
209-21003- 11	69	1	DS 11	A		F					
	183										
209-21003- 21		1	DS 11	A		F					
209-21003- 31	69	1	DS 11	A		F					
	182										
209-21004		1	CP 49								
209-21004- 1	89	1	CP 49	P1	F	O	R		R	1560-309-4693	ANAA
209-21004- 2	89 - 7	1	CP 49	P1	F	O	R		R	1560-309-4694	ANAA
209-21004- 3		1	CP 49								
209-21004- 4		1	CP 49								
209-21004- 5		4	CP 49	M		O					
209-21004- 7		1	CP 49	M		O					
209-21004- 8		1	CP 49	M		O					
209-21004- 9		1	CP 49	M		O					
209-21004- 10		1	CP 49	M		O					
209-21004- 11		1	CP 49								
209-21004- 13		1	CP 49								
209-21004- 15		1	CP 49								
209-21004- 17		1	CP 49								
209-21004-101	89	1	CP 49	P1	F	O	R		R	1560-594-7381	ANAA
209-21004-102	89	1	CP 49	P1	F	O	R		R	1560-594-7382	ANAA
209-21011- 3	89	1	CN 73	X2							
209-21011- 4	89 - 5	1	CN 73	X2							
209-21014		2	BQ128	M		O					
209-21014- 3		2	BQ128	M		O					
209-21017- 1		1	BP276	M		O					
209-21017- 2		1	BP276	M		O					
209-21024- 1		1	BP286	M		O					
209-21024- 2		1	BP286	M		O					
209-21029- 1		1	DR 27	M		O					
209-21029- 2		1	DR 27	M		O					
209-21030		1	DR159								
209-21030- 1		1	DR159	M		O					
209-21030- 5		1	DR159	M		O					
209-21033- 2		1									
209-21038- 1	89	1	BQ129	M		O					
209-21038- 2	89	1	BQ129	M		O					
209-21038- 3		1	BQ129	M		O					
209-21038- 4		1	BQ129	M		O					
209-21038- 5		1	BQ129	M		O					
209-21038- 6		1	BQ129	M		O					
209-21043- 1		1	DR 17	M		O					
209-21043- 2		1	DR 17	M		O					
209-21044		1	DR157								
209-21044- 1		1	DR157	M		O					
209-21044- 2		1	DR157	M		O					
209-21053- 1		1	BV191	M		O					
209-21053- 2		1	BV191	M		O					
209-21057- 1		1	DR 28	M		O					
209-21057- 2		1	DR 28	M		O					
209-21058- 1		1		M		O					
209-21058- 2		1		M		O					
209-21067- 1	89	1	DR158	M		O					
209-21067- 2	89	1	DR158	M		O					
209-21067- 3		2	DR158	M		O					
209-21067- 5		2	DR158	M		O					
209-21068- 1		1	BJ274	M		O					
209-21068- 2		1	BJ274	M		O					
209-21069		2	BD 39	M		O					
209-21082		1	DR117	M		O					
209-21083		1	BJ276								
209-21104		1		M		O					
209-21105		2	DR 19	M		O					
209-21107		2	DR118	M		O					
209-21108		2	BJ280	M		O					
209-21109		2	BJ281	M		O					
209-21302- 1	89	1	BQ134	M		O					
209-21302- 2	89 - 15	1	BQ134	M		O					
209-21303	89 - 17	2	DR153	M		O					
209-21303- 3	89	1	DR153	M		O					
209-21305- 3	89	1	DR197	X1							
209-21305- 4	89 - 16	1	DR197	X1							
209-21305- 5	89	1	DR197	X1							
209-21305- 6	89	1	DR197	X1							
209-21306- 1	89	1	DR 16	P1	F	O	S		R	1560-587-6954	ANAA
209-21306- 2	89	1	DR 16	P1	F	O	S		R	1560-587-6955	ANAA
209-21310	89 - 51	1	BD 40	M		O					
209-21312- 1		1							R	1560-309-4695	ANAA
209-21312- 2		1							R	1560-524-5065	ANAA
209-21312- 11	89	1	DR199	P1	F	O	S		R	1560-535-5530	ANAA
209-21312- 12	89 - 2	1	DR199	P1	F	O	S		R	1560-570-2251	ANAA
209-21314		2	BF 43	M		O					
209-21316		2	BF 45	M		O					
209-21316- 3		2	BF 45	M		O					
209-21318		2	BF 44	M		O					
209-21319	89 - 4	2	BP278	P	F	O	C		R	1560-309-4696	ANAA
209-21319- 1		2	BP278	M		O					
209-21319- 2		2	BP278	M		O					
209-21319- 3		4	BP278	M		F					
209-21320		2	BP235	M		F					
209-21321		1	DR218								
209-21321- 3		8	DR218	M		F					
209-21321- 5		4	DR218	M		F					
209-21322		1	DR207	M		O					
209-21323		2	CJ321	M		O					
209-21338		2	DS298	M		O					
209-21338- 3		2	DS298	M		O					
209-21402- 1	89	1	BQ148	X1							
209-21402- 2	89 - 13	1	BQ148	X1							
209-21403- 1	89	1	CM184	X1							
209-21403- 2	89 - 14	1	CM184	X1							
209-21405- 1	89 - 21	1	BQ126	P1	O	O	S		R	1560-031-4929	ANAA
209-21405- 3		1	BQ126	X1							
209-21405- 4		1	BQ126	X1							
209-21406- 1	89	1	BQ130	P1	O	O	S		R	1560-031-4931	ANAA
209-21406- 2	89 - 27	1	BQ130	P1	O	O	S		R	1560-031-4932	ANAA
209-21406- 3		1	BQ130	X1							
209-21406- 4		1	BQ130	X1							
209-21409	89 - 8	8	CG219	P	F	O	S		R	5306-031-4933	ANAA
209-21412- 3		2	BP299	X1							
209-21412- 11	89 - 9	2	BP299	X2					R	1560-323-4151	ANAA
209-21413- 1		1	DR190								
209-21413- 2		1	DR190								
209-21413- 3		1	DR190	X1							

PART NUMBER	FIGURE AND INDEX	TOTAL QTY.	MICRO-FILM NUMBER	MAINTENANCE CODE DATA: SOURCE CODE	INSTL CAPABILITY	PRE-INSTL CAPABILITY	RECOVERABILITY	SUPPORT EQUIPMENT	FEDERAL STOCK NUMBER DATA: COGNIZANCE CODE	FEDERAL STOCK NUMBER	MFG. CODE (TSMC)
209-21413- 4		1	DP190	X1							
209-21413- 11	89	1	DR190						R	1560-603-3544	ANAA
209-21413- 12	89 - 18	1	DR190						R	1560-603-3545	ANAA
209-21413- 22		1	DR190	P1	O	O	S		R	1560-511-1890	ANAA
209-21413- 32	89	1	DR190	M		O					
209-21416		2	CU 55	M		O					
209-21419		2	DR219	M		O					
209-21421	89 - 30	2	DR195	P1	O	O	S		R	1560-323-4152	ANAA
209-21421- 3	89	1	DR195	M		O			R	1560-602-7290	ANAA
209-21422- 3		1	BP292	X1							
209-21422- 4		1	BP292	X1							
209-21422- 11	89	1	BP292	P1	O	O	S		R	1560-693-8723	ANAA
209-21422- 12	89 - 20	1	BP292	P1	O	O	S		R	1560-693-8724	ANAA
	89 - 21										
209-21423- 3		1	BP277	X1							
209-21423- 4		1	BP277	X1							
209-21423- 11	89	1	BP277	P1	O	O	S		R	1560-693-8725	ANAA
209-21423- 12	89 - 27	1	BP277	P1	O	O	S		R	1560-693-8726	ANAA
209-21424- 1	89	1									
209-21424- 2	89 - 19	1									
209-21442- 11		1									
209-21442- 12		1									
209-22002- 1		1	DH185	P1	F	O	S		R	1560-309-4697	ANAA
209-22002- 2		1	DH185						R	1560-309-4698	ANAA
209-22002- 11	87	1	DH185	P1	F	O	R		R	1560-569-2484	ANAA
	89										
209-22002- 12	87	1	DH185	P1	F	O	R		R	1560-569-2485	ANAA
	89 - 32										
209-22002- 21	87	1	DH185	P1	F	O	R		R	1560-571-5481	ANAA
	89										
209-22002- 22	87	1	DH185	P1	F	O	R		R	1560-571-5482	ANAA
	89										
209-22002- 31	87	1	DH185	P1	F	O	R		R	1560-575-2176	ANAA
	89										
209-22002- 32	87	1	DH185	P1	F	O	R		R	1560-575-8374	ANAA
	89										
209-22015- 1		1	BP288	M		O					
209-22015- 2		1	BP288	M		O					
209-22023- 1		1	BJ284	M		O					
209-22023- 2		1	BJ284	M		O					
209-22037		2	BJ285	M		O					
209-22055- 1		1	BJ286	M		O					
209-22055- 2		1	BJ286	M		O					
209-22056- 1		1	BJ287	M		O					
209-22056- 2		1	BJ287	M		O					
209-22056- 3		1	BJ287	M		O					
209-22056- 4		1	BJ287	M		O					
209-22065		2	BJ288	M		O					
209-22067- 1		1	BJ289	M		O					
209-22067- 2		1	BJ289	M		O					
209-22067- 3		1	BJ289	M		O					
209-22067- 4		1	BJ289	M		O					
209-22068- 1	87	1	BJ290	M		O					
209-22068- 2	87 - 8	1	BJ290	M		O					
209-22068- 3		1	BJ290	M		O					
209-22068- 4		1	BJ290	M		O					
209-22068- 5		2	BJ290	M		O					
209-22101- 2		1	BF 50	M		O					
209-22101- 1		1	BF 50	M		O					
209-22303- 3		2	DH 42	M		O					
209-22303- 5		1	DH 42	M		O					
209-22303- 6		1	DH 42	M		O					
209-22303- 7		1	DH 42	M		O					
209-22303- 8		1	DH 42	M		O					
209-22303- 11	87	1	DH 42	X1							
209-22303- 12	87	1	DH 42	X1							
209-22303- 19		1	DH 42	M		O					
209-22303- 20		1	DH 42	M		O					
209-22303- 21		1	DH 42	M		O					
209-22303- 22		1	DH 42	M		O					
209-22303- 23		1	DH 42	M		O					
209-22303- 24		1	DH 42	M		O					
209-22303- 25		2	DH 42	M		O					
209-22303- 27		1	DH 42	M		O					
209-22303- 28		1	DH 42	M		O					
209-22303- 31		4	DH 42	M		O					
209-22303- 33		1	DH 42	M		O					
209-22303- 34		1	DH 42	M		O					
209-22303- 43		4	DH 42	M		O					
209-22303- 45		1	DH 42	M		O					
209-22303- 47		4	DH 42	M		O					
209-22303- 49		2	DH 42	M		O					
209-22303- 51		2	DH 42	M		O					
209-22303- 53		4	DH 42	M		O					
209-22303- 55		1	DH 42	X1							
209-22303- 56		1	DH 42	X1							
209-22303- 57		1	DH 42	X1							
209-22303- 58		1	DH 42	X1							
209-22303- 61		1	DH 42	M		O					
209-22303- 62		1	DH 42	M		O					
209-22303- 63		1	DH 42	M		O					
209-22303- 64		1	DH 42	M		O					
209-22303- 65		1	DH 42	M		O					
209-22303- 66		1	DH 42	M		O					
209-22303- 67		1	DH 42	M		O					
209-22303- 68		1	DH 42	M		O					
209-22303- 69		1	DH 42	M		O					
209-22303- 70		1	DH 42								
209-22303- 75		1	DH 42	M		O					
209-22303- 76		1	DH 42	M		O					
209-22303- 77		1	DH 42	M		O					
209-22303- 78		1	DH 42	M		O					
209-22303- 79		1	DH 42	M		O					
209-22303- 80		1	DH 42	M		O					
209-22303- 81		1	DH 42	M		O					
209-22303- 83		1	DH 42	X1							
209-22303- 84		1	DH 42	X1							
209-22303- 85		1	DH 42	X1							
209-22303- 86		1	DH 42	X1							
209-22303- 87		1	DH 42	M		O					
209-22303- 88		1	DH 42	M		O					
209-22303- 89		1	DH 42	M		O					
209-22303- 90		1	DH 42	M		O					
209-22303- 91		1	DH 42	M		O					
209-22303- 92		1	DH 42	M		O					
209-22303- 93		1	DH 42	M		O					
209-22303- 94		1	DH 42	M		O					
209-22303- 95		1	DH 42	X1							
209-22303- 96		1	DH 42	X1							
209-22303- 97		1	DH 42	X1							
209-22303- 98		1	DH 42	X1							
209-22303- 99		1	DH 42	X1							
209-22303-101	87	1	DH 42	M		O					
209-22303-102	87	1	DH 42	M		O					
209-22303-103		1	DH 42	X1							
209-22303-105		1	DH 42	X1							
209-22303-106		1	DH 42	X1							
209-22303-107		1	DH 42	X1							
209-22303-108		1	DH 42	X1							
209-22304- 1	87	1	DH 46	X1							
209-22304- 2	87	1	DH 46	X1							
209-22304- 3	87 - 29	2	DH 46	M		O					
209-22304- 5	87 - 28	2	DH 46	M		O					
209-22304- 7	87	1	DH 46	X1							
209-22304- 8	87	1	DH 46	X1							
209-22304-101	87	1	DH 46	P1	O	O	S		R	1560-569-1433	ANAA
209-22304-102	87	1	DH 46	P1	O	O	S		R	1560-570-2252	ANAA
209-22304-201	87	1	DH 46						R	1560-571-5483	ANAA
209-22304-202	87	1	DH 46						R	1560-571-5484	ANAA
209-22313- 1	87	1	DB286	X2							
209-22313- 2	87 - 14	1	DB286	X2							
209-22313- 3		1	DB286	X1							
209-22313- 4		1	DB286	X1							
209-22314- 1	87	1		A		O					
209-22314- 2	87 - 9	1		A		O					
209-22314- 3	87	1		M		O					
209-22314- 4	87 - 13	1		M		O					
209-22402- 3		1	DP302	X1							
209-22402- 4		1	DP302	X1							
209-22402- 5	87	1	DP302	P1	F	O	S		R	1560-333-7880	ANAA
209-22402- 6	87 - 1	1	DP302	P1	F	O	S		R	1560-333-7881	ANAA
209-22402- 7		1	DP302	X1							
209-22402- 8		1	DP302	X1							
209-22402- 11	87	1	DP302						R	1560-588-6990	ANAA
209-22402- 12	87	1	DP302						R	1560-588-6991	ANAA
209-22405- 1	87	1	BP279	X1							
209-22405- 2	87 - 4	1	BP279	X1							
209-22405- 3		1	BP279	X1							
209-22405- 4		1	BP279	X1							
209-22406- 1	87	1	BP294	X1							
209-22406- 2	87 - 5	1	BP294	X1							
209-22407- 1	87	1	BJ292	P	F	O	S		R	1560-031-4940	ANAA
209-22407- 2	87 - 6	1	BJ292	P	F	O	S		R	1560-031-4941	ANAA
209-22407- 3		1	BJ292	X1							
209-22407- 4		1	BJ292	X1							
209-22408	87 - 7	2	BJ293	P	F	O	S		R	1560-031-4942	ANAA
209-22408- 9		2	BJ293	X1							
209-22410- 7		1	DG123	M		O					
209-22410- 8		1	DG123	M		O					
209-22410- 9		1	DG123	M		O					
209-22410- 10		1	DG123	M		O					
209-22414	87 - 2	2	BF 53	M		O					
209-22415	87 - 18	2	BQ133	P1	F	O	S		R	1560-031-4943	ANAA
209-22415- 3		2	BQ133	M		O					
209-22415- 5		2	BQ133	M		O					
209-22415- 7		2	BQ133	M		O					
209-22415- 9		2	BQ133	M		O					
209-22415- 11		2	BQ133								
209-22415- 13		2	BQ133	M		O					
209-23001-301	91	1	DK 47	A		F					
209-23001-501	91	1	DK 47	A		F					
209-23001-701	91	1	DK 47	A		F					
209-23001-901	91	1	DK 47	A		F					
209-23002- 3	91 - 54	1	DK 43	X1							
209-23002- 7		1	DK 43	M		O					
209-23002- 9		2	DK 43	M		O					
209-23002- 10		1	DK 43	M		O					
209-23002- 11	91	2	DK 43	M		O					
209-23002- 13		2	DK 43	M		O					
209-23002- 17		1	DK 43	X1							
209-23002- 18	91 - 53	1	DK 43								
209-23002- 19		1	DK 43	M		O					
209-23002- 23		1	DK 43	M		O					
209-23002- 25		1	DK 43	M		O					
209-23002- 27		1	DK 43	M		O					
209-23002- 29		1	DK 43	M		O					
209-23002- 31	91 359 - 7	1	DK 43	X1							
209-23002- 41	91 359	1	DK 43	X1							
209-23003		1	BP300								
209-23029		1	BP285	M		O					
209-23031- 11	91 - 38	1	BQ144	M		O					
209-23030		1	BP291	M		O					
209-23030- 3		1	BP291	M		O					
209-23030- 5		1	BP291	M		O					
209-23036		1	BJ302	M		O					
209-23036- 3		1	BJ302	M		O					
209-23037		1	CN 57	M		O					
209-23042		1	BJ305	M		O					

PART NUMBER	FIGURE AND INDEX	TOTAL QTY.	MICRO-FILM NUMBER	MAINTENANCE CODE DATA: SOURCE CODE	INSTL CAPABILITY	PRE-INSTL CAPABILITY	RECOVERABILITY	SUPPORT EQUIPMENT	FEDERAL STOCK NUMBER DATA: COGNIZANCE CODE	FEDERAL STOCK NUMBER	MFG. CODE (TSMC)
209-23049		1	CN 28	M		O					
209-23049- 3		1	CN 28	M		O					
209-23050		1	BJ309	M		O					
209-23050- 3		1	BJ309	M		O					
209-23056		1	CN 24	M		O					
209-23057		1	CN 49	M		O					
209-23057- 3		1	CN 49	M		O					
209-23064		1	BJ314	M		O					
209-23065		1	CN 19	M		O					
209-23065- 3		1	CN 19	M		O					
209-23071		1	CN 18	M		O					
209-23072		1	BJ318	M		O					
209-23072- 3		1	BJ318	M		O					
209-23078		1	BJ320	M		O					
209-23079		1	BJ321	M		O					
209-23079- 3		1	BJ321	M		O					
209-23081		1	BJ323	M		O					
209-23086		1	BJ324	M		O					
209-23087		1	CL312	M		O					
209-23088		1	BJ326	M		O					
209-23101		1	BQ150	M		O					
209-23101- 3		1	BQ150	M		O					
209-23101- 5		2	BQ150	M		O					
209-23101- 7		1	BQ150	M		O					
209-23101- 8		1	BQ150	M		O					
209-23101- 9		1	BQ150	M		O					
209-23101- 10		1	BQ150	M		O					
209-23103- 1		1	BQ151	M		O					
209-23104		1	BQ142	M		O					
209-23105		1	BJ328	M		O					
209-23105- 3		1	BJ328	M		O					
209-23105- 5		1	BJ328	M		O					
209-23106		1	BJ329	M		O					
209-23106- 3		1	BJ329	M		O					
209-23106- 5		1	BJ329	M		O					
209-23107		1	BF 54	M		O					
209-23108		1	BF 55	M		O					
209-23110		1	BU 57	M		O					
209-23111		1	BU 50	M		O					
209-23112		1	BU 61	M		O					
209-23113		1	BU 53	M		O					
209-23114- 1		1	DA233	M		O					
209-23115- 1		1	BU 59	M		O					
209-23116- 1		1	BU 56	M		O					
209-23116- 2		1	BU 56	M		O					
209-23117		1	BU 52	M		O					
209-23118		1	BU 60	M		O					
209-23119		1	BU 55	M		O					
209-23120		1	DA117	M		O					
209-23301	91 - 37	1	BQ154	M		O					
209-23301- 3		1	BQ154	M		O					
209-23302	91 - 36	1	BQ177	M		O					
209-23302- 3		1									
209-23302- 4		1									
209-23302- 17	91	1									
209-23303		1	BQ144								
209-23303- 5		1	BQ144	M		O					
209-23304- 1		1	BJ330	M		O					
209-23304- 3		1	BJ330	M		O					
209-23307- 1		1	BJ332	M		O					
209-23307- 2		1	BJ332	M		O					
209-23308		1	BJ333	M		O					
209-23312		1							R	1560-523-7635	ANAA
209-23313		1	BF 56	M		O					
209-23314		1	CR 12	M		O					
209-23315		1	CJ314	M		O					
209-23316		1	BJ334	M		O					
209-23320		1	BF 58								
209-23321		1	BF 61								
209-23325	88 - 20 91 - 10 359 - 2	1	CM197	P1	F	O	S		R	1560-348-7388	ANAA
209-23325- 3		1	CM197	M		O					
209-23325- 4		1	CM197	M		O					
209-23325- 5		1	CM197	M		O					
209-23325- 6		1	CM197	M		O					
209-23325- 7		1	CM197	M		O					
209-23325- 9		1	CM197	M		O					
209-23325- 11		1	CM197	M		O					
209-23325- 12		1	CM197	M		O					
209-23325- 13		2	CM197	M		O					
209-23325- 15		1	CM197	M		O					
209-23325- 17		1	CM197	M		O					
209-23325- 19		1	CM197	M		O					
209-23325- 21		1	CM197	M		O					
209-23325- 23		4	CM197	M		O					
209-23325- 25		2	CM197	M		O					
209-23325- 27		1	CM197	M		O					
209-23325- 29		1	CM197	M		O					
209-23325- 31		1	CM197	M		O					
209-23325- 33		1	CM197	M		O					
209-23325- 35		1	CM197	M		O					
209-23325- 37		1	CM197	M		O					
209-23325- 39		3	CM197	M		O					
209-23325- 41		1	CM197	M		O					
209-23325- 43		1	CM197	M		O					
209-23325- 45		1	CM197	M		O					
209-23325- 47		1	CM197	M		O					
209-23325- 48		1	CM197	M		O					
209-23325- 49		1	CM197	M		O					
209-23325- 51		1	CM197	M		O					
209-23325- 53		1	CM197	M		O					
209-23325- 55		1	CM197	M		O					
209-23325- 57		1	CM197	M		O					
209-23332		1	BF 60	M		O					

PART NUMBER	FIGURE AND INDEX	TOTAL QTY.	MICRO-FILM NUMBER	MAINTENANCE CODE DATA: SOURCE CODE	INSTL CAPABILITY	PRE-INSTL CAPABILITY	RECOVERABILITY	SUPPORT EQUIPMENT	FEDERAL STOCK NUMBER DATA: COGNIZANCE CODE	FEDERAL STOCK NUMBER	MFG. CODE (TSMC)
209-23333		1	BF 62	M		O					
209-23334		1	BF 63	M		O					
209-23335		1	BF 65	M		O					
209-23336- 3		1	BJ336	M		O					
209-23336- 5		1	BJ336	M		O					
209-23336- 7		1	BJ336	M		O					
209-23336- 9		1	BJ336	M		O					
209-23336- 11		1	BJ336	M		O					
209-23337		1	BF 64	M		O					
209-23338		1	BF 67	M		O					
209-23351- 1		1	BQ172	M		O					
209-23351- 2	88 - 25	1	BQ172	M		O					
209-23351- 3		1	BQ172	M		O					
209-23351- 11	88 - 5	1	BQ172	M		O					
209-23352- 1	88	1	BQ190	M		O					
209-23352- 2	88 - 29	1	BQ190	M		O					
209-23353		1	BJ337	M		O					
209-23354		1	BF 66	M		O					
209-23354- 3		1	BF 66	M		O					
209-23355- 1		1	BQ161								
209-23355- 2		1	BQ161								
209-23356		1	CJ249	M		O					
209-23356- 3		1	CJ249	M		O					
209-23356- 5		1	CJ249	M		O					
209-23356- 7		1	CJ249	M		O					
209-23356- 9		1	CJ249	M		O					
209-23357		1	CJ255	M		O					
209-23357- 3		1	CJ255	M		O					
209-23357- 5		1	CJ255	M		O					
209-23357- 7		1	CJ255	M		O					
209-23357- 9		1	CJ255	M		O					
209-23358- 1	90	1	BQ192	M		O					
209-23358- 2	90 - 2	1	BQ192	M		O					
209-23359		1	BF 68	M		O					
209-23360		1	CN 22	M		O					
209-23361		1	BJ341	M		O					
209-23362		1	CJ301	M		O					
209-23362- 3		1	CJ301	M		O					
209-23363		1	CJ282	M		O					
209-23364- 1		1	CL313	M		O					
209-23364- 2		1	CL313	M		O					
209-23367		1		M		O					
209-23368	91 - 13	1	CL314	M		O					
209-23368- 3		1	CL314	M		O					
209-23369		1	BF 70	M		O					
209-23374		30	CJ279	M		O					
209-23375	91 - 12	1	BF 72	M		O					
209-23376		2	BF 73	M		O					
209-23377		1	CJ305	M		O					
209-23377- 3		1	CJ305	M		O					
209-23378		1	CL315								
209-23378- 3		1	CL315	M		O					
209-23378- 11	88 - 8	1	CL315	M		O					
209-23379	91 - 12	1	CJ322	M		O					
209-23380		1	BJ346								
209-23380- 3		1	BJ346								
209-23381		1	BJ347								
209-23381- 3		1	BJ347								
209-23381- 5		1	BJ347								
209-23381- 7		1	BJ347								
209-23381- 9		1	BJ347								
209-23382- 3		1	BJ348								
209-23382- 5		1	BJ348								
209-23382- 7		1	BJ348								
209-23382- 9		1	BJ348								
209-23383		1	BJ349								
209-23384	88 - 1 359 - 4	1	BT222								
209-23384- 5		1	BT222	M		O					
209-23384- 7		1	BT222	M		O					
209-23384- 9		1	BT222	M		O					
209-23384- 11		1	BT222	M		O					
209-23387		1	BJ350								
209-23388		1	BF176								
209-23388- 3		1	BF176								
209-23389		1	BF177								
209-23401- 3	91 - 14	1	BQ156	P1					R	1500-C06-2276	ANAA
209-23401- 5		1	BQ156	X2					R	1560-346-1114	ANAA
209-23401- 7		1	BQ156								
209-23402- 3		1	BQ173								
209-23402- 4		1	BQ173								
209-23403- 1	91 - 35	1	BQ167								
209-23403- 2	91 - 15	1	BQ167								
209-23404	90 - 4	2	CJ312	M		O					
209-23404- 3		2	CJ312	M		O					
209-23405	90 - 6	2	BJ351	M		O					
209-23407- 1	91	1	CK 99	M		O					
209-23407- 2	91 - 40	1	CK 99	M		O					
209-23410	91 - 47	1	BQ187								
209-23411	91 - 39	1	BQ155	M		O					
209-23411- 3		1	BQ155								
209-23412	91 - 45	1	DA 92								
209-23413	91 - 46	1	BJ355	M		O					
209-23413- 3		1	BJ355	M		O					
209-23414	91 - 24	1	CK101	X2							
209-23415	91	1	BJ357	X2							
209-23415- 3	91 - 25	1	BJ357	X1							
209-23416	91 - 30	1	QF189	X2							
209-23418	92 - 10	1	BJ358	P1	O	O	S		R	1560-031-4946	ANAA
209-23418- 3		1	BJ358	X1							
209-23419	91 - 54	1	BQ165	P1	O	O	S		R	1560-511-1891	ANAA
209-23421	91 - 51	2		M		O					
209-23423- 3	91	1	BQ193	P1	O	O	S		R	1560-570-2253	ANAA
209-23423- 4	91 - 53	1	BQ193	P1	O	O	S		R	1560-570-2254	ANAA
209-23424		1	BQ181								

PART NUMBER	FIGURE AND INDEX	TOTAL QTY.	MICRO-FILM NUMBER	MAINTENANCE CODE DATA: SOURCE CODE	INSTL CAPABILITY	PRE-INSTL CAPABILITY	RECOVERABILITY	SUPPORT EQUIPMENT	COGNIZANCE CODE	FEDERAL STOCK NUMBER DATA: FEDERAL STOCK NUMBER	MFG. CODE (TSMC)
209-23424- 5	91 - 47	1	BQ181	P1	O	O	S		R	1560-031-4947	ANAA
209-23424- 7		1	BQ181	X1							
209-23424- 21	91	1	BQ181	P1	O	O	S		R	1560-569-1434	ANAA
209-23425	91 - 45	1	BQ197								
209-23425- 3		1	BQ197	X1							
209-23425- 5	91 - 45	1	BQ197	X2							
209-23425- 7		1	BQ197								
209-23425- 11	91	1	BQ197								
209-23426- 3		1	BQ175	X1							
209-23426- 11		1	BQ175								
209-23427		1	BQ164								
209-23430		1	BJ359								
209-23431		1	BJ360								
209-23432		1	BJ361								
209-23901- 1		1	DJ 5								
209-23901-101		1	DJ 5	P1	F	O	R		R	1560-693-8727	ANAA
209-23901-301	359 - 1	1	DJ 5	P1	F	O	R		R	1560-693-8728	ANAA
209-23901-501		1	DJ 5								
209-23901-901	359	1	DJ 5								
209-24005		1	BQ168								
209-24007	91 - 1 92	1	CN 79	P1	F	O	R		R	1560-346-1118	ANAA
209-24007- 11	91 - 1 92	1	CN 79	P1	F	O	R		R	1560-508-8831	ANAA
209-24007- 21	91 92	1	CN 79	P1	F	O	R		R	1560-564-1478	ANAA
209-24007- 31	91 92	1	CN 79	P1	F	O	R		R	1560-571-5485	ANAA
209-24008	92	1	DL157								
209-24008- 3		1	DL157								
209-24008- 5		1	DL157	M		O					
209-24008- 7		1	DL157	X1							
209-24008- 9		1	DL157	M		O					
209-24008- 10		1	DL157	M		O					
209-24008- 11	92	1	DL157	M		O					
209-24008- 12		1	DL157	M		O					
209-24008- 13		1	DL157	M		O					
209-24008- 14		1	DL157	M		O					
209-24008- 15		1	DL157	M		O					
209-24008- 16		1	DL157	M		O					
209-24008- 17		1	DL157	M		O					
209-24008- 18		1	DL157	M		O					
209-24008- 19		1	DL157	M		O					
209-24008- 20		1	DL157	M		O					
209-24008- 21		1	DL157	M		O					
209-24008- 22		1	DL157	M		O					
209-24008- 23		3	DL157	M		O					
209-24008- 24		3	DL157	M		O					
209-24008- 25		2	DL157	M		O					
209-24008- 26		2	DL157	M		O					
209-24008- 27		2	DL157	M		O					
209-24008- 28		2	DL157	M		O					
209-24008- 29		3	DL157	M		O					
209-24008- 30		3	DL157	M		O					
209-24008- 31		2	DL157	M		O					
209-24008- 32		2	DL157	M		O					
209-24008- 33		2	DL157	M		O					
209-24008- 34		2	DL157	M		O					
209-24008- 35		1	DL157	M		O					
209-24008- 36		1	DL157	M		O					
209-24008- 37		6	DL157	M		O					
209-24008- 39		2	DL157	M		O					
209-24008- 41		1	DL157	M		O					
209-24008- 43		1	DL157	M		O					
209-24008- 45		1	DL157	M		O					
209-24008- 47		1	DL157	M		O					
209-24008- 48		1	DL157	M		O					
209-24008- 49		1	DL157	M		O					
209-24008- 50		1	DL157	M		O					
209-24008- 51		1	DL157	M		O					
209-24008- 53		1	DL157	X1							
209-24008- 55		1	DL157	X1							
209-24008-101		1	DL157	X1							
209-24010	92	1	DM 17	X1							
209-24010- 3		1	DM 17	M		O					
209-24010- 5		1	DM 17	M		O					
209-24011	92	1	DA221								
209-24011- 3	92 - 41	1	DA221	M		O					
209-24011- 5	92 - 42	1	DA221	M		O					
209-24011- 7		1	DA221	M		O					
209-24014- 3		1	DA267	M		O					
209-24014- 5		1	DA267	M		O					
209-24015D	23	1									
209-24018- 5		1	BJ362								
209-24027- 3		1	BJ363								
209-24030		1	CA278								
209-24030- 11		1	CA278								
209-24031		1	CL316								
209-24031- 3		1	CL316								
209-24031- 5		1	CL316								
209-24031- 7		1	CL316								
209-24031- 11		1	CL316								
209-24033		1	BJ366								
209-24035		1	CA279	M		O					
209-24035- 3		1	CA279	M		O					
209-24035- 5		1	CA279	M		O					
209-24038		1	BJ368								
209-24041		1	CN 37	M		O					
209-24041- 3		1	CN 37	M		O					
209-24043		1	BJ370								
209-24048		1	BJ371	M		O					
209-24048- 3		1	BJ371	M		O					
209-24049		1	BJ372								
209-24054		1	BJ373								
209-24057		1	CL317	M		O					

PART NUMBER	FIGURE AND INDEX	TOTAL QTY.	MICRO-FILM NUMBER	MAINTENANCE CODE DATA: SOURCE CODE	INSTL CAPABILITY	PRE-INSTL CAPABILITY	RECOVERABILITY	SUPPORT EQUIPMENT	COGNIZANCE CODE	FEDERAL STOCK NUMBER DATA: FEDERAL STOCK NUMBER	MFG. CODE (TSMC)
209-24057- 3		1	CL317	M		O					
209-24060		1	BJ375								
209-24063		1	CN 17	M		O					
209-24063- 3		1	CN 17	M		O					
209-24063- 5		1	CN 17	M		O					
209-24065		1	BJ377								
209-24068		1	DA252	M		O					
209-24068- 3		1	DA252	M		O					
209-24070		1	BJ379								
209-24073		1	BJ380	M		O					
209-24073- 3		1	BJ380	M		O					
209-24076		1	BJ381								
209-24078		1	CK 83	M		O					
209-24078- 3		1	CK 83	M		O					
209-24080		1	BJ383								
209-24081		1	BJ384	M		O					
209-24081- 3		1	BJ384	M		O					
209-24082		1	DJ182	M		O					
209-24102		1	BQ194								
209-24104	88 - 12	1	BQ153	M		O					
209-24108- 3		1	BF180								
209-24108- 5		1	BF180								
209-24109		1	BJ385								
209-24114		1	BJ386								
209-24118		1	BK 19								
209-24122- 3		1	BP170	M		O					
209-24122- 5		1	BP170	M		O					
209-24122- 7		1	BP170	M		O					
209-24122- 9		1	BP170								
209-24124- 3		1	BK 20								
209-24124- 5		1	BK 20								
209-24125- 3		1	CJ311	M		O					
209-24125- 5		1	CJ311	M		O					
209-24125- 7		1	CJ311	M		O					
209-24125- 9		1	CJ311	M		O					
209-24125- 11		1	CJ311	M		O					
209-24125- 13		1	CJ311	M		O					
209-24125- 15		1	CJ311	M		O					
209-24125- 17		1	CJ311	M		O					
209-24125- 19		1	CJ311	M		O					
209-24126		1	BF182								
209-24303		1	BX242								
209-24303- 3		1	BX242								
209-24303- 5		1	BX242								
209-24303- 7		1	BX242	M		O					
209-24303- 9		1	BX242	M		O					
209-24303- 11		1	BX242	M		O					
209-24303- 13		1	BX242	M		O					
209-24303- 15		1	BX242	M		O					
209-24303- 17		1	BX242	M		O					
209-24303- 19		1	BX242	M		O					
209-24303- 21		1	BX242	M		O					
209-24303- 23		1	BX242	M		O					
209-24303- 25		1	BX242	M		O					
209-24303- 27		1	BX242	M		O					
209-24303- 29		1	BX242	M		O					
209-24303- 31		1	BX242	M		O					
209-24303- 33		1	BX242	M		O					
209-24303- 35		1	BX242	M		O					
209-24303- 37		1	BX242	M		O					
209-24303- 39		1	BX242	M		O					
209-24303- 41		1	BX242	M		O					
209-24303- 43		1	BX242								
209-24303- 45		1	BX242	M		O					
209-24303- 47		1	BX242	M		O					
209-24303- 49		1	BX242	M		O					
209-24403	92 - 29	1	BQ205								
209-24404	92 - 35	1	BK 21	M		O					
209-24405- 3	92 - 5	1	BQ179	X1							
209-24405- 5	92 - 1	1	BQ179	P1	O	O	S		R	1560-031-4950	ANAA
209-24405- 7	92	1	BQ179	X1							
209-24405- 11	92	1	BQ179	P1	O	O	S		R	1560-522-8869	ANAA
209-24406	92 - 37	1	BK 22	M		O					
209-24407	92 - 36	1	BK 23	M		O					
209-24408- 3	92 - 19	8	BF183	M		O					
209-24408- 5	92	4R	BF183	M		O					
209-24409	92 - 34	1	BK 24	M		O					
209-24410- 11		1	BQ196								
209-24412		1	BQ157								
209-24414		1	BK 25								
209-24415	92 - 21	1	BF184	M		O					
209-24416		1	BK 28								
209-24417	92 - 20	1	BF185	M		O					
209-24418	92 - 30	2	BF186								
209-24419	92 - 6	1	CA296	M		O					
209-24419- 3	92	1	CA296	M		O					
209-24502	92 359 - 9	1	BQ188	P1	F	O	S		R	1560-569-1563	ANAA
209-24510- 5		1	BQ186								
209-24510- 7		1	BQ186								
209-24510- 11		1	BQ186								
209-24512- 3		1	BF188								
209-24518- 3	92 - 27	1	BK 27	M		F					
209-24518- 5	92 - 43	1	BK 27	M		F					
209-24519	359 - 10	1	CZ 81	M		O					
209-24519- 3		1	CZ 81	M		O					
209-24521	92 - 28	1	BK 29	M		O					
209-24521- 3		1	BK 29	M		O					
209-24521- 5		2	BK 29	M		O					
209-24522	359 - 11	1	BF189	M		O					
209-24523		1	BQ178								
209-24524		1	BK 30								
209-24526		1	BK 31								
209-24526- 3		1	BK 31								
209-24526- 5		1	BK 31								

PART NUMBER	FIGURE AND INDEX	TOTAL QTY.	MICRO-FILM NUMBER	MAINTENANCE CODE DATA: SOURCE CODE	INSP'L CAPABILITY	REL-IBIL'T CAPABILITY	RECOVERABILITY	SUPPORT EQUIPMENT	FEDERAL STOCK NUMBER DATA: COGNIZANCE CODE	FEDERAL STOCK NUMBER	MFG. CODE (TSMC)
209-24531	92 359 - 8	1	BQ182	P1	F	O	S		R	1560-522-8873	ANAA
209-24531- 3		1	BQ182	M		O					
209-24531- 5		1	BQ182	M		O					
209-24531- 7		1	BQ182	M		O					
209-24531- 11	92	1	BQ182						R	1560-571-5486	ANAA
209-24532	92 - 27	1	BQ170	P1	F	O	S		R	1560-544-8541	ANAA
209-24533	92 - 43	1	BQ166	P1	F	O	S		R	1560-511-1898	ANAA
209-24534	92 - 25	1	BK 32	M		O					
209-24535	92 - 28	1	BK 33	M		O					
209-24535- 3		1	BK 33	M		O					
209-24535- 5		2	BK 33	M		O					
209-24535- 11	92	1	BK 33	M		F					
209-24595	92 - 24	1	BF190	M		F					
209-24901-100		1	DJ 6								
209-24901-101	359 - 8	1	DJ 6	P1	F	O	S		R	1560-694-8006	ANAA
209-24901-201		1	DJ 6								
209-25001		1	DM120	U							
209-25002- 1	88	1	BQ174	P1	F	O	S		R	1560-037-2569	ANAA
209-25002- 2	88 - 32	1	BQ174	P1	F	O	S		R	1560-037-2570	ANAA
209-25002- 3		1	BQ174	X1							
209-25002- 4		1	BQ174	X1							
209-25002- 5		1	BQ174	X1							
209-25002- 6		1	BQ174	X1							
209-25002- 7		1	BQ174	M		O					
209-25002- 8		1	BQ174	M		O					
209-25002- 11		1	BQ174	X1							
209-25002- 12		1	BQ174	X1							
209-25003- 1	88	1	DM 15	P1	F	O	S		R	1560-037-2571	ANAA
209-25003- 2	88 - 44	1	DM 15	P1	F	O	S		R	1560-037-2572	ANAA
209-25003- 3		1	DM 15	X1							
209-25003- 4		1	DM 15	X1							
209-25003- 5		1	DM 15	X1							
209-25003- 6		1	DM 15	X1							
209-25003- 11		1	DM 15	X1							
209-25003- 12		1	DM 15	X1							
209-25003-101	88	1	DM 15						R	1560-571-5487	ANAA
209-25003-102	88	1	DM 15						R	1560-571-5488	ANAA
209-25004- 1	88	1	BQ184	P1	F	O	S		R	1560-037-2573	ANAA
209-25004- 2	88 - 53	1	BQ184	P1	F	O	S		R	1560-037-2574	ANAA
209-25004- 3		1	BQ184	X1							
209-25004- 4		1	BQ184	X1							
209-25004- 5		1	BQ184	X1							
209-25004- 6		1	BQ184	X1							
209-25004- 7		1	BQ184	M		O					
209-25004- 8		1	BQ184	M		O					
209-25004- 11	88 - 54	1	BQ184	P1	F	O	S		R	1560-570-2255	ANAA
209-25005	88 - 74	1	DJ 99	P1	F	O	S		R	1560-037-2575	ANAA
209-25005- 3		1	DJ 99	X1							
209-25005- 4		1	DJ 99	X1							
209-25005- 5		1	DJ 99	M		O					
209-25005- 7		1	DJ 99	X1							
209-25006- 1	88	1	CM295	M		O					
209-25006- 2	88 - 66	1	CM295	M		O					
209-25006- 3		1	CM295	M		O					
209-25006- 4		1	CM295	M		O					
209-25006- 5		1	CM295	M		O					
209-25006- 6		1	CM295	M		O					
209-25007- 21	88	1	DM119						R	1560-571-5489	ANAA
209-25008		1	DJ108								
209-25009		1	DJ100								
209-25010	88 - 30	1	BQ195	M		O					
209-25010- 3		1	BQ195	M		O					
209-25010- 5		2	BQ195	M		O					
209-25011- 1	88	1	BK 18	M		O					
209-25011- 2	88 - 70	1	BK 18	M		O					
209-25012		1	DL 67								
209-25014- 1	88	1	CA280	M		O					
209-25014- 2	88 - 50	1	CA280	M		O					
209-25014- 3		1	CA280	M		O					
209-25014- 5		1	CA280	M		O					
209-25014- 7		1	CA280	M		O					
209-25015		1	DJ 64	M		O					
209-25016		1	DM 16	M		O					
209-25016- 3		1	DM 16	M		O					
209-25016- 21		1	DM 16	M		O					
209-25018- 1		1	CY 25	M		O					
209-25018- 2		1	CY 25	M		O					
209-25018- 3		1	CY 25	M		O					
209-25018- 4		1	CY 25	M		O					
209-25018- 5		1	CY 25	M		O					
209-25018- 7		1	CY 25	M		O					
209-25018- 11		1	CY 25	M		O					
209-25019- 1		1	BK 19	M		O					
209-25019- 2		1	BK 19	M		O					
209-25019- 3		1	BK 19	M		O					
209-25019- 4		1	BK 19	M		O					
209-25020		1	DK 41	M		O					
209-25020- 3		1	DK 41	M		O					
209-25020- 11		1	DK 41								
209-25021		1	DM121	M		O					
209-25021- 3		1	DM121	M		O					
209-25021- 5		1	DM121	M		O					
209-25021- 7		1	DM121	M		O					
209-25021- 9		1	DM121	M		O					
209-25021- 11		1	DM121	M		O					
209-25022- 1		1	DJ 7	M		O					
209-25022- 2		1	DJ 7	M		O					
209-25022- 3		1	DJ 7	M		O					
209-25022- 4		1	DJ 7	M		O					
209-25022- 5		1	DJ 7	M		O					
209-25022- 21	88 - 55	1	DJ 7	M		O					
209-25023		1	BF 91	M		O					
209-25024		1	BF192	M		O					
209-25051		1	BQ270	U							

PART NUMBER	FIGURE AND INDEX	TOTAL QTY.	MICRO-FILM NUMBER	MAINTENANCE CODE DATA: SOURCE CODE	INSP'L CAPABILITY	REL-IBIL'T CAPABILITY	RECOVERABILITY	SUPPORT EQUIPMENT	FEDERAL STOCK NUMBER DATA: COGNIZANCE CODE	FEDERAL STOCK NUMBER	MFG. CODE (TSMC)
209-25052- 1		1	BQ241								
209-25052- 2		1	BQ241								
209-25052- 3		1	BQ241								
209-25052- 4		1	BQ241								
209-25052- 5		1	BQ241								
209-25052- 6		1	BQ241								
209-25052- 7		1	BQ241								
209-25052- 8		1	BQ241								
209-25052- 11		1	BQ241								
209-25052- 12		1	BQ241								
209-25053- 1		1	BQ256								
209-25053- 2		1	BQ256								
209-25053- 3		1	BQ256								
209-25053- 4		1	BQ256								
209-25053- 5		1	BQ256								
209-25053- 6		1	BQ256								
209-25053- 11		1	BQ256								
209-25053- 12		1	BQ256								
209-25055		1	BQ252								
209-25055- 3		1	BQ252								
209-25055- 4		1	BQ252								
209-25055- 5		1	BQ252								
209-25055- 7		1	BQ252								
209-25060		1	BQ263								
209-25060- 3		1	BQ263								
209-25060- 5		1	BQ263								
209-25064- 1		1	BK 40								
209-25064- 3		1	BK 40								
209-25064- 5		1	BK 40								
209-25064- 7		1	BK 40								
209-25064- 11		1	BK 40								
209-25065		1	BK 41								
209-25066		1	BX241								
209-25066- 3		1	BX241								
209-25070		1	BR 11								
209-25070- 3		1	BR 11								
209-25070- 5		1	BR 11								
209-25070- 6		1	BR 11								
209-25071		1	BQ259								
209-25071- 3		1	BQ259								
209-25071- 5		1	BQ259								
209-25073		1	BF193								
209-25074		1	BF194								
209-26129- 11		1									
209-28342- 15		8	DM 85	M		O					
209-31001	32	1	DR184								
209-31001-101		1	DR184	X							
209-31001-151		1	DR184	X							
209-31001-161		1	DR184	X							
209-31001-181		1	DR184	X							
209-31001-201		1	DR184	X							
209-31001-301		1	DR184	X							
209-31001-351		1	DR184	X							
209-31001-401		1	DR184	X							
209-31001-501		1	DR184	X							
209-31001-601		1	DR184	X							
209-31001-701		1	DR184	X							
209-31001-801		1	DR184	X							
209-31001-851		1	DR184	X							
209-31001-901		1	DR184	X							
209-31003- 1	74 - 20	1	CY 21	M		O					
209-31003- 2	74	1	CY 21	M		O					
209-31003- 3		1	CY 21	M		O					
209-31003- 4		1	CY 21	M		O					
209-31003- 5		1	CY 21	M		O					
209-31003- 6		1	CY 21	M		O					
209-31004- 1	47 - 5	1									
209-31004- 2	47	1									
209-31006	71 - 9 356	1									
209-31007	71 - 1 356	1	CY 36	M		O					
209-31009	44 - 70	1	BR 4	M		O					
209-31009- 3	44	1	BR 4	M		O					
209-31009- 5		1	BR 4	M		O					
209-31009- 7		1	BR 4	M		O					
209-31009- 9		1	BR 4	M		O					
209-31009- 37		1	BR 4	M		O					
209-31010		1	DN 91								
209-31010- 5		1	DN 91	M		O					
209-31010- 7		1	DN 91	M		O					
209-31010- 8		1	DN 91	M		O					
209-31010- 9		1	DN 91	M		O					
209-31010- 11		1	DN 91	M		O					
209-31010- 12		1	DN 91	M		O					
209-31010- 17		1	DN 91	M		O					
209-31010- 18		1	DN 91	M		O					
209-31010- 19		1	DN 91	M		O					
209-31010- 21		1	DN 91	M		O					
209-31010- 22		1	DN 91	M		O					
209-31010- 23		1	DN 91	M		O					
209-31010- 27		2	DN 91	M		O					
209-31010- 29		1	DN 91	M		O					
209-31010- 31		1	DN 91	M		O					
209-31010- 33		2	DN 91	M		O					
209-31010- 34		1	DN 91	M		O					
209-31010- 35		1	DN 91	M		O					
209-31010- 37		1	DN 91	M		O					
209-31010- 39		1	DN 91	M		O					
209-31010- 41	47 - 41	1	DN 91	M		O					
209-31010- 43	68 - 70	2	DN 91	M		O					
209-31010- 45		1	DN 91	M		O					
209-31010- 49		1	DN 91	M		O					
209-31010- 51		2	DN 91	M		O					
209-31010- 52		2	DN 91	M		O					

PART NUMBER	FIGURE AND INDEX	TOTAL QTY.	MICRO-FILM NUMBER	MAINTENANCE CODE DATA: SOURCE CODE	INSTL CAPABILITY	REINSTL CAPABILITY	RECOVERABILITY	SUPPORT EQUIPMENT	FEDERAL STOCK NUMBER DATA: COGNIZANCE CODE	FEDERAL STOCK NUMBER	MFG. CODE (TSMC)
209-31010- 57		1	DN 91	M		O					
209-31010- 61		1	DN 91	M		O					
209-31010- 63		1	DN 91	M		O					
209-31010- 65	47 - 28	1	DN 91	M		O					
209-31010- 67		1	DN 91	M		O					
209-31010- 69		1	DN 91	M		O					
209-31010- 70		1	DN 91	M		O					
209-31010- 71		1	DN 91	M		O					
209-31010- 72		1	DN 91	M		O					
209-31010- 79		1	DN 91	M		O					
209-31010- 80		1	DN 91	M		O					
209-31010- 81		1	DN 91	M		O					
209-31010- 82		1	DN 91	M		O					
209-31010- 83		1	DN 91								
209-31010- 85		1	DN 91	M		O					
209-31010- 86		1	DN 91	M		O					
209-31010- 89		2	DN 91	M		O					
209-31010- 91		1	DN 91	M		O					
209-31010- 92		1	DN 91	M		O					
209-31010- 95		1	DN 91	M		O					
209-31010- 96		1	DN 91	M		O					
209-31010- 97		1	DN 91	M		O					
209-31010- 99		1	DN 91	M		O					
209-31010-101	44 47	1	DN 91	P1	F	O	R		R	1560-031-4953	ANAA
209-31010-103		1	DN 91	M		O					
209-31010-151	44 - 83 47 - 1	1	DN 91	P1	F	O	R		R	1560-508-6832	ANAA
209-31010Z		1							R	1560-572-7794	ANAA
209-31010Z- 1		1									
209-31011- 1		1							R	1560-031-4954	ANAA
209-31011- 2		1							R	1560-031-4955	ANAA
209-31016- 1	39 - 9	1	BK 44	M		F					
209-31016- 2	39	1	BK 44	M		F					
209-31017- 1		1	BK 45	M		O					
209-31017- 2		1	BK 45	M		O					
209-31017- 11	39 - 42	1	BK 45	M		O					
209-31017- 12	39	1	BK 45	M		O					
209-31018- 1	41 - 73	8	AW444	P	F	O	S		R	1560-530-8400	ANAA
209-31018- 2	41	8	AW444	P	F	O	C		R	1560-530-8885	ANAA
209-31019- 3	42 - 14	1	BD 43	M		O					
209-31019- 4	42	1	BD 43	M		O					
209-31020	41 - 31	2	BF196	P1	F	O	S		R	1560-570-2256	ANAA
209-31021- 1	42 - 22	2	BD 44	M		O					
209-31021- 2	42	2	BD 44	M		O					
209-31022- 1	39 - 46 42 - 1	1	CV105	P1	F	O	S		R	1560-031-4956	ANAA
209-31022- 2	39 42	1	CV105	P1	F	O	S		R	1560-031-4957	ANAA
209-31022- 3		1	CV105	M		O					
209-31022- 4		1	CV105	M		O					
209-31022- 5		1	CV105	M		O					
209-31022- 6		1	CV105	M		O					
209-31022- 7		1	CV105	M		O					
209-31022- 8		1	CV105	M		O					
209-31022- 9		1	CV105	M		O					
209-31022- 10		1	CV105	M		O					
209-31022- 11		1	CV105	M		O					
209-31022- 12		1	CV105	M		O					
209-31022- 13		1	CV105	M		O					
209-31022- 14		1	CV105	M		O					
209-31022- 15		1	CV105	M		O					
209-31022- 16		1	CV105	M		O					
209-31022- 17		1	CV105	M		O					
209-31022- 18		1	CV105	M		O					
209-31022- 19		1	CV105	M		O					
209-31022- 20		1	CV105	M		O					
209-31022- 21		1	CV105	M		O					
209-31022- 22		1	CV105	M		O					
209-31022- 23		1	CV105	M		O					
209-31022- 24		1	CV105	M		O					
209-31022- 25		1	CV105	M		O					
209-31022- 26		1	CV105	M		O					
209-31022- 27		1	CV105	M		O					
209-31022- 28		1	CV105	M		O					
209-31022- 29		4	CV105	M		O					
209-31022- 31		4	CV105	M		O					
209-31022- 33		7	CV105	M		O					
209-31022- 34		2	CV105	M		O					
209-31022- 35		1	CV105	M		O					
209-31022- 36		1	CV105	M		O					
209-31022- 37	42 - 48	4	CV105	M		O					
209-31022- 41		7	CV105								
209-31022- 42		2	CV105								
209-31022- 43	42 - 2	1	CV105	M		O					
209-31022- 44	42	1	CV105	M		O					
209-31022- 45	42 - 3	1	CV105	M		O					
209-31022- 46	42	1	CV105	M		O					
209-31022- 47		2	CV105	M		O					
209-31022- 49		1	CV105	M		O					
209-31022- 50		1	CV105	M		O					
209-31022- 51		1	CV105	M		O					
209-31022- 52		1	CV105	M		O					
209-31022- 53	42 - 5	1	CV105	M		O					
209-31022- 54	42	1	CV105	M		O					
209-31022- 59		2	CV105	M		O					
209-31022- 63		1	CV105	M		O					
209-31022- 64		1	CV105	M		O					
209-31022- 71	42 - 72	2	CV105	M		O					
209-31022- 72	42 - 73	1	CV105	M		O					
209-31022- 73	42 - 9	1	CV105	M		O					
209-31023	44 -131	1	BL266	M		O					
209-31023- 3		1	BL266	M		O					
209-31023- 5		1	BL266	M		O					
209-31023- 7		1	BL266	M		O					
209-31023- 8		1	BL266	M		O					
209-31023- 9		2	BL266	M		O					
209-31023- 11		1	BL266	M		O					
209-31023- 13		1	BL266	M		O					
209-31024		1	BD 45	M		O					
209-31025	44 -120	2	BF197	M		F					
209-31025- 2		1	BF197	M		F					
209-31026- 1	44 -123	1	BK 46	M		F					
209-31026- 2	44	1	BK 46	M		F					
209-31026- 3	44 -124	1	BK 46	M		F					
209-31026- 4	44	1	BK 46	M		F					
209-31026- 5		1	BK 46	M		F					
209-31026- 6		1	BK 46	M		F					
209-31027	44 - 73	1	BK 47	M		O					
209-31027- 3	44	1	BK 47	M		O					
209-31027- 7		1	BK 47	M		O					
209-31028	44 -137	14	BK 48	P1	F	O	S		R	1560-031-4958	ANAA
209-31028- 5		1	BK 48	M		O					
209-31028- 7	44 -138	1	BK 48	M		O					
209-31029	44 - 89	1	CN 27	M		F					
209-31029- 3		1	CN 27	M		F					
209-31029- 5		1	CN 27	M		F					
209-31030	44 - 84	1	BK 50	M		F					
209-31030- 7	44	1	BK 50	M		F					
209-31030- 9		1	BK 50	M		F					
209-31031		1	BD 46	M		O					
209-31032		1	BD 47	M		O					
209-31033	44 - 66	1	BQ250	P	F	O	S		R	1560-031-4959	ANAA
209-31033- 3		1	BQ250	M		O					
209-31033- 5		1	BQ250	M		O					
209-31033- 7		1	BQ250	M		O					
209-31033- 9		1	BQ250	M		O					
209-31033- 11		1	BQ250	M		O					
209-31033- 13		4	BQ250	M		O					
209-31033- 14		4	BQ250	M		O					
209-31033- 15		1	BQ250	M		O					
209-31033- 16		1	BQ250	M		O					
209-31033- 19		1	BQ250	M		O					
209-31033- 27		2	BQ250	M		O					
209-31033- 28		2	BQ250	M		O					
209-31033- 29		2	BQ250	M		O					
209-31033- 30		2	BQ250	M		O					
209-31033- 31		1	BQ250	M		O					
209-31033- 33		1	BQ250	M		O					
209-31033- 35		1	BQ250	M		O					
209-31033- 37		1	BQ250	M		O					
209-31033- 39		4	BQ250	M		O					
209-31033- 41		2	BQ250	M		O					
209-31034	44 - 69 44 - 89	1	BQ249	M		O					
209-31034- 9		1	BQ249	M		O					
209-31034- 11		1	BQ249	M		O					
209-31034- 15		1	BQ249	M		O					
209-31034- 17		1	BQ249	M		O					
209-31035- 3		1	BQ268	M		F					
209-31035- 5		1	BQ268	M		F					
209-31035- 21	33 - 20	1	BQ268	M		F					
209-31035- 31	33	1	BQ268	M		F					
209-31036	47 - 44	2	BF198	M		O					
209-31036- 3		2	BF198	M		O					
209-31036- 5		2	BF198	M		O					
209-31040- 1	44 - 53	1	BQ262	A		O					
209-31040- 2	44	1	BQ262	A		O					
209-31040- 3		1	BQ262	M		O					
209-31040- 4		1	BQ262	M		O					
209-31040- 8		2	BQ262	M		O					
209-31040- 9		1	BQ262	M		O					
209-31040- 10		2	BQ262	M		O					
209-31046	47 - 27	2	BK 51	P1	F	O	C		R	1560-031-4960	ANAA
209-31047- 1	47 - 67	1	BF202	M		O					
209-31047- 2	47	1	BF202	M		O					
209-31049- 3		2									
209-31049- 5		1									
209-31050	39 - 80 39 - 81 43 - 61 43 - 62	4	BQ261	P1	F	O	S		R	1560-031-4961	ANAA
209-31050- 3		2	BQ261	M		O					
209-31050- 4		2	BQ261	M		O					
209-31050- 5		2	BQ261	M		O					
209-31050- 7		2	BQ261	M		O					
209-31050- 9		2	BQ261	M		O					
209-31050- 11		2	BQ261	M		O					
209-31050- 13	39 - 92	4	BQ261	M		O					
209-31050- 15	39	2	BQ261	M		O					
209-31050- 17	39	2	BQ261	M		O					
209-31050- 19	39	4	BQ261	M		O					
209-31050- 21	39	4	BQ261	M		O					
209-31051	41 - 7	4	BD 49	M		F					
209-31052	44	1	BR 2	M		O					
209-31052- 3		1	BR 2	M		O					
209-31052- 5		1	BR 2	M		O					
209-31053	44 - 20	1	BR 13	M		O					
209-31055- 1		1	BR 13	M		O					
209-31055- 2		1	BR 13	M		O					
209-31055- 3		1	BR 13	M		O					
209-31055- 4		1	BR 13	M		O					
209-31055- 5		1	BR 13	M		O					
209-31055- 6		1	BR 13	M		O					
209-31056- 1		1	CN 51	M		O					
209-31056- 2		1	CN 51	M		O					
209-31056- 3		1	CN 51	M		O					
209-31056- 4		1	CN 51	M		O					
209-31057	44 - 90	1	BF205	M		F					
209-31057- 3		1	BF205	M		F					

PART NUMBER	FIGURE AND INDEX	TOTAL QTY.	MICRO-FILM NUMBER	MAINTENANCE CODE DATA: SOURCE CODE	INSTL CAPABILITY	PRE-INSTL CAPABILITY	RECOVERABILITY	SUPPORT EQUIPMENT	FEDERAL STOCK NUMBER DATA: COGNIZANCE CODE	FEDERAL STOCK NUMBER	MFG. CODE (TSMC)
209-31057- 5		1	BF205	M		F					
209-31057- 7		1	BF205	M		F					
209-31057- 9		1	BF205	M		F					
209-31057- 11		1	BF205	M		F					
209-31057- 13		2	BF205	M		F					
209-31057- 15		1	BF205	M		F					
209-31057- 17		2	BF205	M		F					
209-31057- 51	44 - 85	1	BF205	M		F					
209-31057-101	71 - 24	1	BF205	M		F					
209-31057-151	71 - 18	2	BF205	M		F					
209-31057-201	71	2	BF205	M		F					
209-31058	44 - 64	1	BK 54	M		O					
209-31060	44 - 67	1	BK 55	M		O					
209-31060- 3	44	1	BK 55	M		O					
209-31060- 5		1	BK 55								
209-31060- 7	44	1	BK 55	M		O					
209-31061- 3		1	BR 7	M		O					
209-31061- 4		1	BR 7	M		O					
209-31061- 5		1	BR 7	M		O					
209-31061- 6		1	BR 7	M		O					
209-31062- 1	44 - 39	1	BR 6	P1	F	O	S		R	1560-031-4962	ANAA
209-31062- 2	44	1	BR 6	P1	F	O	S		R	1560-031-4963	ANAA
209-31062- 3		1	BR 6	X1							
209-31062- 4		1	BR 6	X1							
209-31062- 5		1	BR 6	M		O					
209-31062- 6		1	BR 6	M		O					
209-31062- 7		1	BR 6	X1							
209-31062- 8		1	BR 6	X1							
209-31062- 9		2	BR 6	M		O					
209-31062- 11		2	BR 6	M		O					
209-31063	47 - 36	1	CL320	P	F	O	S		R	1560-570-2257	ANAA
209-31063- 3		1	CL320	M		O					
209-31063- 5		1	CL320	M		O					
209-31063- 7	47 - 40	1	CL320	M		O					
209-31063- 9		1	CL320	M		O					
209-31064- 1		1	BK 57	M		O					
209-31064- 2		1	BK 57	M		O					
209-31065	47 - 60	2									
209-31065- 1		1	BD 50	M		O					
209-31065- 2		1	BD 50	M		O					
209-31067	47 - 52	2	BF206	M		O					
209-31067- 3		2	BF206	M		O					
209-31068	47 - 32	2	BF207	M		O					
209-31069- 1	47 - 33	1	BF208	M		O					
209-31069- 2	47	1	BF208	M		O					
209-31070- 1	48 - 68	1	BF209	M		O					
209-31070- 2	48	1	BF209	M		O					
209-31070- 3	48	1	BF209	M		O					
209-31070- 4	48	1	BF209	M		O					
209-31070- 5	48 - 69	2	BF209	M		O					
209-31071	48 - 75	2	BF210	M		O					
209-31072- 1		1	BK 58	M		O					
209-31072- 2		1	BK 58	M		O					
209-31073- 1	48 - 72	1	CM229	P1	F	O	C		R	1560-341-4654	ANAA
209-31073- 2	48	1	CM229	P1	F	O	C		R	1560-341-4655	ANAA
209-31074	39 - 80	4	DR319	P1	F	O	S		R	1560-338-1010	ANAA
	39 - 81										
	49 - 62										
209-31074- 3		2	DR319	M		O					
209-31074- 5	39 - 83	2	DR319	M		O					
209-31074- 7	39 - 84	2	DR319	M		O					
209-31074- 9	39	4	DR319	M		O					
209-31074- 11	39	4	DR319	M		O					
209-31074- 13		2	DR319	M		O					
209-31074- 15	39 - 93	4	DR319	M		O					
209-31074- 17		4	DR319	M		O					
209-31075	74 - 26	1	BK 60	P	F	O	S		R	1560-570-2258	ANAA
209-31075- 3		1	BK 60	M		O					
209-31075- 5		1	BK 60	M		O					
209-31075- 7		1	BK 60	M		O					
209-31075- 9		1	BK 60	M		O					
209-31075- 11		2	BK 60	M		O					
209-31075- 15	74 - 27	1	BK 60	M		O					
209-31076	74 - 50	2	CU 57	M		O					
209-31077	73	1	BQ255	P1	F	O	S		R	1560-031-4964	ANAA
209-31077- 3	73 - 52	1	BQ255	M		O					
209-31077- 5	73	1	BQ255	M		O					
209-31077- 7		1	BQ255	M		O					
209-31077- 9		1	BQ255	M		O					
209-31077- 11		1	BQ255	M		O					
209-31077- 13		1	BQ255	M		O					
209-31077- 15	73 - 48	1	BQ255	M		O					
209-31077- 17	73 - 53	1	BQ255	M		O					
209-31077- 18	73 - 47	1	BQ225	M		O					
209-31077- 21		1	BQ255	M		O					
209-31077- 23		1	BQ255	M		O					
209-31077- 25	73 - 54	1	BQ255	M		O					
209-31077- 29	73 - 51	1	BQ255	M		O					
209-31077- 31	73 - 50	1	BQ255	M		O					
209-31077- 33	73 - 49	1	BQ255	M		O					
209-31077- 35	73 - 46	1	BQ255	M		O					
209-31077- 37	73 - 45	1	BQ255	M		O					
209-31077- 43	73	1	BQ255	M		O					
209-31077- 45	73	1	BQ255	M		O					
209-31077-101	71	1	BQ255	P1	F	O	S		R	1560-694-8068	ANAA
	73										
209-31078- 1	71 - 80	1	BQ242	P	F	O	S		R	1560-570-2259	ANAA
	358										
209-31078- 2	71	1	BQ242	P	F	O	S		R	1560-570-2260	ANAA
	358										
209-31078- 3		1	BQ242	M		O					
209-31078- 4		1	BQ242	M		O					
209-31079- 1	358	1	BQ258	P1	F	O	C		R	1560-570-2261	ANAA
209-31079- 2	71	1	BQ258	P1	F	O	C		R	1560-570-2262	ANAA
	358										
209-31079- 3		1	BQ258	M		O					
209-31079- 4		1	BQ258	M		O					
209-31080- 1	71 - 77	1	BK 61	M		O					
209-31080- 2	71	1	BK 61	M		O					
209-31081	71 - 22	1	BK 62	M		F					
	358										
209-31081- 3		1	BK 62	M		F					
209-31081- 5		1	BK 62	M		F					
209-31082- 1	72	1	BQ253	M		O					
	73										
209-31082- 2	72 - 34	1	BQ253	M		O					
	73										
209-31082- 3	73 - 43	1	BQ253	M		O					
209-31082- 4	73	1	BQ253	M		O					
209-31082- 5		1	BQ253	M		O					
209-31082- 6		1	BQ253	M		O					
209-31082- 7		1	BQ253	M		O					
209-31082- 8		1	BQ253	M		O					
209-31082- 9		1	BQ253	M		O					
209-31083	74 - 45	2	BD 51	M		O					
209-31084- 1	74 - 29	1	BF212	M		O					
209-31084- 2	74 - 30	1	BF212	M		O					
209-31085	74 - 28	1	BF213	M		O					
209-31085- 3		2	BF213	M		O					
209-31086	71 - 15	1	BK 63	M		F					
	358										
209-31086- 3		1	BK 63	M		F					
209-31087	71 - 25	1	BQ245	P1	F	O	S		R	1560-031-4965	ANAA
209-31087- 7		1	BQ245	X1							
209-31087- 9		1	BQ245	X1							
209-31087- 11		1	BQ245	X1							
209-31088	71 - 29	1	BK 64	M		O					
209-31088- 3		1	BK 64	M		O					
209-31088- 5		1	BK 64	M		O					
209-31089		4	BK 65	M		O					
209-31089- 3		4	BK 65	M		O					
209-31089- 5		4	BK 65	M		O					
209-31090	74 - 23	1	BK 66	M		F					
209-31090- 3		1	BK 66	M		F					
209-31090- 5		1	BK 66	M		F					
209-31091	42 - 66	2	BF214	M		O					
209-31092		2	BF215								
209-31092- 1	42 - 63	2	BF215	M		O					
209-31092- 3	42 - 64	2	BF215	M		O					
209-31093	42 - 69	2	BF216	M		O					
209-31094	42 - 77	2	BF217	M		O					
209-31095- 1	42 - 33	1	BX253	M		O					
209-31095- 2		1	BX253	M		O					
209-31096- 5		2	CV 59	M		O					
209-31096- 7	47 - 71	1									
209-31096- 11	47	1	CV 59	M		O					
209-31096- 12	47	1	CV 59	M		O					
209-31097- 1	42 - 8	2	BD 52	M		F					
209-31097- 7	42 - 12	2	BD 52	M		F					
209-31097- 9	42 - 19	2	BD 52	M		F					
209-31097- 11	42 - 16	2	BD 52	M		F					
209-31099	33 - 42	1	CA 13	P2	F	O	S		R	1560-511-1899	ANAA
	205 -105										
209-31099- 3		1	CA 13	X1							
209-31099- 5		1	CA 13	X1							
209-31099- 19		1	CA 13	M		O					
209-31099- 21		1	CA 13	M		O					
209-31099- 23		1	CA 13	M		O					
209-31099- 27		1	CA 13	M		O					
209-31099- 29		1	CA 13	M		O					
209-31099- 35		1	CA 13	M		O					
209-31099- 37		1	CA 13	M		O					
209-31099- 39		1	CA 13	M		O					
209-31099- 43		1	CA 13	M		O					
209-31099- 45		1	CA 13	M		O					
209-31099- 47		1	CA 13	M		O					
209-31099- 49		1	CA 13	M		O					
209-31099- 55		1	CA 13	M		O					
209-31099- 57		1	CA 13	M		O					
209-31099- 61	33	1	CA 13	P2	F	O	S		R	1560-511-1902	ANAA
	205										
209-31099- 65		1	CA 13	M		O					
209-31099- 67		1	CA 13	M		O					
209-31099- 69		1	CA 13	M		O					
209-31099- 71		1	CA 13	M		O					
209-31101		1	BQ198	M		O					
209-31101- 3		1	BQ198	M		O					
209-31101- 4		1	BQ198	M		O					
209-31101- 5		1	BQ198	M		O					
209-31101- 7		1	BQ198	M		O					
209-31101- 9		2	BQ198	M		O					
209-31101- 11		2	BQ198	M		O					
209-31101- 13		2	BQ198	M		O					
209-31101- 15		1	BQ198								
209-31101- 17		1	BQ198								
209-31101- 19		1	BQ198								
209-31101- 21		1	BQ198								
209-31101- 25		1	BQ198	M		O					
209-31101- 27		1	BQ198	M		O					
209-31101- 29		1	BQ198	M		O					
209-31101- 31		1	BQ198	M		O					
209-31101- 33		1	BQ198	M		O					
209-31101- 37		1	BQ198	M		O					
209-31101- 39		2	BQ198	M		O					
209-31101-101		1	BQ198	U							
209-31101-151		1	BQ198	U							
209-31101-161		1	BQ198	U							
209-31101-171		1	BQ198	U							
209-31101-181		1	BQ198	U							
209-31101-201		1	BQ198	U							

PART NUMBER	FIGURE AND INDEX	TOTAL QTY.	MICRO-FILM NUMBER	MAINTENANCE CODE DATA: SOURCE CODE	INSTL CAPABILITY	PRE-INSTL CAPABILITY	RECOVERABILITY	SUPPORT EQUIPMENT	FEDERAL STOCK NUMBER DATA: COGNIZANCE CODE	FEDERAL STOCK NUMBER	MFG. CODE (TSMC)
209-31101-251		1	BQ198	U							
209-31101-301		1	BQ198	U							
209-31101-351		1	BQ198	U							
209-31101-401		1	BQ198	U							
209-31101-451		1	BQ198	U							
209-31101-461		1	BQ198	U							
209-31102- 3	358	2	DN110	M		O					
209-31102- 5	358	1	DN110	M		O					
209-31102-101		1	DN110	X1							
209-31102-151		1	DN110	X1							
209-31102-201		1	DN110	X1							
209-31102-301		1	DN110	X1							
209-31102-501		1	DN110	U							
209-31104		1									
209-31106		1	DJ103	M		O					
209-31106- 10		1	DJ103	M		O					
209-31106- 11		1	DJ103	M		O					
209-31106- 12		1	DJ103	M		O					
209-31106- 21		1	DJ103	M		O					
209-31106- 23		1	DJ103	M		O					
209-31106- 25		1	DJ103	M		O					
209-31106- 29		1	DJ103	M		O					
209-31106- 31		1	DJ103	M		O					
209-31106- 33		1	DJ103	M		O					
209-31106- 35		1	DJ103	M		O					
209-31106- 41		1	DJ103	M		O					
209-31106- 43		1	DJ103	M		O					
209-31106- 45		1	DJ103	M		O					
209-31106- 47		1	DJ103	M		O					
209-31106- 49		1	DJ103	M		O					
209-31106- 55		1	DJ103	M		O					
209-31106- 61		1	DJ103	M		O					
209-31106- 63		1	DJ103	M		O					
209-31106- 65		1	DJ103	M		O					
209-31110		1	DL145	M		F					
209-31110- 3		1	DL145	M		F					
209-31110- 5		2	DL145	M		F					
209-31110- 9		1	DL145	M		F					
209-31110- 11	33 - 27	1	DL145	M		F					
209-311101		1	CP 51	U							
209-311102		1	CP 41	U							
209-311103	266 - 73	1	CN 83	X2							
209-311104	266 - 30	1	CM245	P1					R	1560-564-1479	ANAA
209-311105	266 - 31	1	CM233	P1					R	1560-564-1480	ANAA
209-311105- 3		1	CM233	X1							
209-311106	266 - 29	4	CM235	M		O					
209-311107	266 - 38	1	CM279	P1					R	1560-564-1481	ANAA
209-311108	266 - 39	2	CM281	P1					R	1560-564-1482	ANAA
209-31111		1	AW320								
209-31111- 5		1	AW320	M		O					
209-31111- 7		1	AW320	M		O					
209-311110	266 - 43	1	CM209	X2							
209-311112	266 - 40	1	CM239	P1					R	1560-564-1483	ANAA
209-311112- 3		1	CM239	X1							
209-311113		1	CM284	M		O					
209-311114		1	CM268	M		F					
209-311114- 47		1	CM268	M		O					
209-311116	266 - 47	1	CM240	P1					R	1560-564-1484	ANAA
209-311117	266 - 35	2	CM282	M		O					
209-311118	266 - 53	1	DC 85	X1							
209-311119	266 - 52	1	CM234	X1							
209-311120	266 - 46	1	CM263	M		O					
209-311121	266 - 50	1	CM269	M		O					
209-311122		1	CP141	M		O					
209-311123		1	CP140	M		O					
209-311124		1	CP144	M		O					
209-311124- 3		1	CP144	M		O					
209-311125	266 - 54	1	CP104	M		O					
209-311126	266 - 55	1	DE132	M		O					
209-311127		1	CM287	M		O					
209-311128	266 - 44	1	CM264	M		O					
209-311129- 3	266 - 25	1	CP136	P					R	1560-564-1485	ANAA
209-311129- 5	266 - 26	1	CP136	P					R	1560-564-1486	ANAA
209-31113		1	DK191	X1							
209-31113- 3		1	DK191	M		O					
209-31113- 4		1	DK191	M		O					
209-31113- 5		1	DK191	M		O					
209-31113- 6		1	DK191	M		O					
209-31113- 7		2	DK191	M		O					
209-31113- 9		2	DK191	M		O					
209-31113- 11		1	DK191	M		O					
209-31113- 12		1	DK191	M		O					
209-31113- 13		1	DK191	M		O					
209-31113- 14		1	DK191	M		O					
209-31113- 15		1	DK191	M		O					
209-31113- 16		1	DK191	M		O					
209-31113- 17		1	DK191	M		O					
209-31113- 18		1	DK191	M		O					
209-31113- 19		1	DK191	M		O					
209-31113- 20		1	DK191	M		O					
209-31113- 21		2	DK191	M		O					
209-31113- 23		2	DK191	M		O					
209-31113- 25		1	DK191	M		O					
209-31113- 27		1	DK191								
209-31113- 29		1	DK191								
209-31113- 31		1	DK191	M		O					
209-31113- 33		1	DK191	M		O					
209-31113- 34		1	DK191	M		O					
209-31113- 35		1	DK191	M		O					
209-31113- 51		1	DK191	M		O					
209-31113-101		1	DK191	X1							
209-311130	266 - 5	4	DP156	M		F					
209-311131		1	CM238	M		O					
209-311132	266 - 60	1	CM283								
209-311132- 3		1	CM283	M		O					

PART NUMBER	FIGURE AND INDEX	TOTAL QTY.	MICRO-FILM NUMBER	MAINTENANCE CODE DATA: SOURCE CODE	INSTL CAPABILITY	PRE-INSTL CAPABILITY	RECOVERABILITY	SUPPORT EQUIPMENT	FEDERAL STOCK NUMBER DATA: COGNIZANCE CODE	FEDERAL STOCK NUMBER	MFG. CODE (TSMC)
209-311133		1	CM286	M		O					
209-311134	266 - 61	1	CM278								
209-311135	266 - 37	4	CM288	M		O					
209-311136	266 - 34	2	CM265	M		O					
209-311137	266	1	CM241	P1					R	1560-564-1487	ANAA
209-311138	266 - 51	1	CM285	M		O					
209-311139		1	CM262	M		O					
209-31114	37 - 16	1	BQ248	P2	O	O	S		R	1560-031-4966	ANAA
209-31114- 3		1	BQ248								
209-31114- 5		1	BQ248	M		O					
209-31114- 6		1	BQ248	M		O					
209-31114- 7		1	BQ248								
209-31114- 9		1	BQ248								
209-31114- 11		1	BQ248								
209-31114- 13		2	BQ248								
209-31114- 15		2	BQ248								
209-31114- 17		2	BQ248	M		O					
209-31114- 19		2	BQ248	M		O					
209-31114- 21		1	BQ248								
209-31114- 22		1	BQ248								
209-31114- 23		1	BQ248								
209-31114- 25		2	BQ248	M		O					
209-31114- 31		2	BQ248	M		O					
209-31114- 33		1	BQ248	M		O					
209-31114- 34		1	BQ248	M		O					
209-31114- 35		2	BQ248	M		O					
209-31114- 37		2	BQ248	M		O					
209-31114- 39	33 - 47	1	BQ248	M		O					
209-31114- 41	33 - 48	1	BQ248	M		O					
209-31114- 43		1	BQ248	M		O					
209-31114- 45	33 - 52	19	BQ248	M		O					
209-31114- 49		1	BQ248	M		O					
209-31114- 51		1	BQ248	M		O					
209-31114- 53		1	BQ248	M		O					
209-31114- 55		1	BQ248	M		O					
209-31114- 57		1	BQ248	M		O					
209-31114- 59		1	BQ248	M		O					
209-31114- 61		1	BQ248	M		O					
209-31114- 63		1	BQ248	M		O					
209-31114- 65		1	BQ248	M		O					
209-31114- 71		1	BQ248	M		O					
209-31114-101	37	1	BQ248	P2	O	O	S		R	1560-513-8939	ANAA
209-31114-151	37	1	BQ248	P2	O	O	S				
209-311140	266 - 10	4	DP157	M		O					
209-311141	266 - 63	2	CM267	M		O					
209-311144		2	CP103	M		O					
209-311145		1	CP106	M		O					
209-311146		1	CP138	M		O					
209-311147		1	CP101	M		O					
209-311148		1	CP139	M		O					
209-311149		1	CP105	M		O					
209-311150		1	CP102	M		O					
209-31116- 3		1	BQ251								
209-31116- 4		1	BQ251								
209-31116- 5		1	BQ251	X2							
209-31116- 6		1	BQ251	X2							
209-31117	33 - 49	1	BK 68	P	F	O	C		R	1560-573-5857	ANAA
209-31117- 39		1	BK 68								
209-31117- 41		1	BK 68								
209-31118	37 - 17	1	CA123	M		O					
209-31118- 3		1	CA123	M		O					
209-31118- 5		1	CA123	M		O					
209-31118- 15		1	CA123	M		O					
209-31118- 17		1	CA123	M		O					
209-31118- 19		1	CA123	M		O					
209-31118- 21		1	CA123	M		O					
209-31121- 1		1	BR 10	M		O					
209-31121- 2		1	BR 10	M		O					
209-31121- 3		1	BR 10	M		O					
209-31122- 1		1	BQ243	M		O					
209-31122- 2		1	BQ243	M		O					
209-31122- 3		1	BQ243	M		O					
209-31122- 4		1	BQ243	M		O					
209-31122- 5		1	BQ243	M		O					
209-31122- 7		1	BQ243	M		O					
209-31122- 9		1	BQ243	M		O					
209-31122- 11		1	BQ243	M		O					
209-31122- 13		1	BQ243	M		O					
209-31122- 14		1	BQ243	M		O					
209-31122- 21		1	BQ243	M		O					
209-31122- 22		1	BQ243	M		O					
209-31124		1	BK 69	M		O					
209-31124- 3		2	BK 69	M		O					
209-31124- 11		1	BK 69	M		O					
209-31125- 1		1	BY191	M		O					
209-31125- 2		1	BY191	M		O					
209-31127- 1		1	BK 71								
209-31127- 2		1	BK 71	M		O					
209-31127- 3		1	BK 71	M		O					
209-31127- 5		1	BK 71	M		O					
209-31127- 7		1	BK 71	M		O					
209-31127- 11		1	BK 71	M		O					
209-31127-151		1	BK 71	M		O					
209-31128- 1		1	BD 53	M		O					
209-31128- 2		1	BD 53	M		O					
209-31129		2	BD 54	M		O					
209-31130- 1		1	BF220	M		O					
209-31130- 2		1	BF220	M		O					
209-31131		1	BK 98	M		O					
209-31132- 3		1	BF221	M		O					
209-31132- 4		1	BF221	M		O					
209-31133		1	BF222	M		O					
209-31134		1	CL321	M		O					
209-31135	37	1	CL322	M		O					
209-31136		1	BR 3	M		O					

PART NUMBER	FIGURE AND INDEX	TOTAL QTY.	MICRO-FILM NUMBER	MAINTENANCE CODE DATA: SOURCE CODE	INSTL CAPABILITY	PRE-INSTL CAPABILITY	RECOVERABILITY	SUPPORT EQUIPMENT	FEDERAL STOCK NUMBER DATA: COGNIZANCE CODE	FEDERAL STOCK NUMBER	MFG. CODE (TSMC)
209-31137		1	BU181	M		0					
209-31137- 7		1	BU181	M		0					
209-31138		1	CN291	M		0					
209-31139	205 -116	1	BU 45	M		0					
209-31139- 15		1	BU 45	M		0					
209-31139- 17		1	BU 45	M		0					
209-31139- 21	205 -121	1	BU 45	M		0					
209-31139- 23	205 -123	1	BU 45	M		0					
209-31139- 25		1	BU 45	M		0					
209-31139- 27	205 -120	1	BU 45	M		0					
209-31139- 35		1	BU 45	M		0					
209-31139- 37		1	BU 45	M		0					
209-31141		1	BJ 58	M		0					
209-31142		1	DP132								
209-31143		1	BG 53								
209-31144		1	BG 54								
209-31146		1	BF224	M		0					
209-31147		1	BQ 21								
209-31148		1	BW 56								
209-31149	205 -124	1	BU 49	M		0					
209-31149- 15		1	BU 49	M		0					
209-31149- 17		1	BU 49	M		0					
209-31149- 21	205 -127	1	BU 49								
209-31149- 23	205 -129	1	BU 49	M		0					
209-31149- 25	205 -126	1	BU 49	M		0					
209-31149- 29		1	BU 49	M		0					
209-31149- 33		1	BU 49	M		0					
209-31150		1	CL323	M		0					
209-31151- 1		1	BK 74	M		0					
209-31151- 2		1	BK 74	M		0					
209-31152- 1		1	BF225	M		0					
209-31152- 2		1	BF225	M		0					
209-31153- 1		1	BK 75	M		0					
209-31153- 2		1	BK 75	M		0					
209-31154		1	BK 76	M		0					
209-31155		1	BF226	M		0					
209-31156		1	BK 77	M		0					
209-31157- 1		1	BF227	M		0					
209-31157- 2		1	BF227	M		0					
209-31158- 1		1	CK 81	M		0					
209-31158- 2		1	CK 81	M		0					
209-31159		1	DO 78	M		0					
209-31160		1	BY192	M		0					
209-31160- 3		1	BY192	M		0					
209-31161		1	BK 81	M		0					
209-31161- 3		1	BK 81	M		0					
209-31162		1	BK 82	M		0					
209-31162- 3		1	BK 82	M		0					
209-31163		1	BK 83	M		0					
209-31163- 3		1	BK 83	M		0					
209-31164		1	BK 84	M		0					
209-31164- 3		1	BK 84	M		0					
209-31165		1	BF228	M		0					
209-31166- 5		1	CL324	M		0					
209-31166- 11		1	CL324	M		0					
209-31167- 1		1	BK 86	M		0					
209-31167- 2		1	BK 86	M		0					
209-31168		1	BK 87	M		0					
209-31169- 1		1	BQ264	M		0					
209-31169- 2		1	BQ264	M		0					
209-31170		1	BK 88	M		0					
209-31171		1	BF229	M		0					
209-31171- 3		1	BF229	M		0					
209-31171- 5		1	BF229	M		0					
209-31172		1	BF230	M		0					
209-31172- 3		1	BF230	M		0					
209-31175		1	BN 59	M		0					
209-31176		1	BF231	M		0					
209-31176- 3		1	BF231	M		0					
209-31177		1	BQ 31								
209-31178		1	CA150								
209-31180		1	CC150								
209-31181		1	CC141								
209-31182- 1		1	CP106	M		0					
209-31182- 2		1	CP106	M		0					
209-31183		1	CP157	M		0					
209-31184		1	DP 72								
209-31185- 1		1	CK 95	M		0					
209-31185- 2		1	CK 95	M		0					
209-31187		1	DN 65								
209-31188		1	DN 52								
209-31189		1	DR 81								
209-31203		1	BK 90	M		0					
209-31204- 3		2		M		0					
209-31204- 5		1		M		0					
209-31204- 6		1		M		0					
209-31205- 1		1	CD 5	M		0					
209-31205- 2		1	CD 5	M		0					
209-31205- 3		2	CD 5	M		0					
209-31205- 5		1	CD 5	M		0					
209-31205- 6		1	CD 5	M		0					
209-31205- 7		1	CD 5	M		0					
209-31205- 8		1	CD 5	M		0					
209-31205- 9		1	CD 5	M		0					
209-31205- 15		1	CD 5	M		0					
209-31205- 17		1	CD 5	M		0					
209-31205-152		1	CD 5	M		0					
209-31206- 1		1	CK 87	M		0					
209-31206- 2		1	CK 87	M		0					
209-31207		1	CP 38								
209-31207- 3	59 - 55	1	CP 38	M		0					
209-31207- 5		2	CP 38								
209-31207- 7		1	CP 38	M		0					
209-31207- 8		1	CP 38	M		0					
209-31207- 9		1	CP 38	M		0					
209-31207- 13		1	CP 38	M		0					
209-31207- 15		2	CP 38	M		0					
209-31207- 17		1	CP 38	M		0					
209-31207- 19		1	CP 38	M		0					
209-31207-101	43	1	CP 38	A		0					
209-31207-201	43	1	CP 38	A		0					
209-31207-251	43	1	CP 38	A		0					
209-31208		1	DM 77	A		0					
209-31208- 3		1	DM 77	M		0					
209-31208- 5		1	DM 77	M		0					
209-31208- 7		1	DM 77	M		0					
209-31208- 8		1	DM 77	M		0					
209-31208- 9		2	DM 77	M		0					
209-31208- 11		1	DM 77	M		0					
209-31208- 12		1	DM 77	M		0					
209-31208- 13		3	DM 77	M		0					
209-31208- 14		3	DM 77	M		0					
209-31208- 15		1	DM 77	M		0					
209-31208- 17		1	DM 77	M		0					
209-31208- 18		1	DM 77	M		0					
209-31208- 19		2	DM 77	M		0					
209-31208- 21		1	DM 77	M		0					
209-31208- 23		1	DM 77	M		0					
209-31208- 25		1	DM 77	M		0					
209-31208- 51		1	DM 77	A		0					
209-31209- 1		1	BR 1	M		0					
209-31209- 2		1	BR 1	M		0					
209-31210	43 - 21	1	BF232	M		0					
209-312101- 1		1	BK 93	M		0					
209-312101- 2		1	BK 93	M		0					
209-312102- 1		1	BF233	M		0					
209-312102- 2		1	BF233	M		0					
209-312103		2	BD 55	M		0					
209-312104- 1		1	BK 94	M		0					
209-312104- 2		1	BK 94	M		0					
209-312105- 1		1	BD 56	M		0					
209-312105- 2		1	BD 56	M		0					
209-312106- 1		1	BF234	M		0					
209-312106- 2		1	BF234	M		0					
209-312108		2	BD 57	M		0					
209-312109- 1		1	BF235	M		0					
209-312109- 2		1	BF235	M		0					
209-31211- 5		1	BY 50	M		0					
209-31211- 6		1	BY 50	M		0					
209-31211- 7		1	BY 50	M		0					
209-31211- 9		1	BY 50	M		0					
209-31211- 11		4	BY 50								
209-31211- 12		1	BY 50	M		0					
209-31211- 13		4	BY 50								
209-31211- 17		1	BY 50	M		0					
209-31211- 19		1	BY 50	M		0					
209-31211- 21		1	BY 50	M		0					
209-31211- 23		1	BY 50	M		0					
209-31211- 27		1	BY 50	M		0					
209-31211- 31		1	BY 50	M		0					
209-31211- 33		2	BY 50	M		0					
209-31211- 39		1	BY 50	M		0					
209-31211- 41		1	BY 50	M		0					
209-31211- 43		1	BY 50	M		0					
209-31211- 47		1	BY 50	M		0					
209-31211- 49		1	BY 50	M		0					
209-31211- 51		1	BY 50	M		0					
209-31211- 53		1	BY 50	M		0					
209-31211- 55		2	BY 50	M		0					
209-31211- 65		1	BY 50	M		0					
209-31211- 69		1	BY 50	M		0					
209-31211- 73	39 - 49	1	BY 50	M		0					
209-31211- 75		1	BY 50	M		0					
209-31211- 76		1	BY 50	M		0					
209-31211- 81	39 - 72	1	BY 50	M		0					
209-31211- 83		1	BY 50	M		0					
209-31211- 85		1	BY 50	M		0					
209-31211- 91		1	BY 50	M		0					
209-31211-101		1	BY 50	X1							
209-31211-107		1	BY 50	M		0					
209-31211-109		1	BY 50	M		0					
209-31211-111		1	BY 50	M		0					
209-31211-119		1	BY 50	M		0					
209-31211-131		1	BY 50	M		0					
209-31211-133		1	BY 50	M		0					
209-31211-135		1	BY 50	M		0					
209-31211-137		1	BY 50	M		0					
209-31211-139		6	BY 50	M		0					
209-31211-141		2	BY 50	M		0					
209-31211-143		12	BY 50								
209-31211-145		4	BY 50	M		0					
209-31211-147		1	BY 50	M		0					
209-31211-149		2	BY 50								
209-31211-151		2	BY 50								
209-31211-153		2	BY 50	M		0					
209-31211-155		2	BY 50								
209-31211-157		2	BY 50	M		0					
209-31211-159		1	BY 50								
209-31211-161		1	BY 50								
209-31211-163		1	BY 50	M		0					
209-31211-165		1	BY 50	M		0					
209-31211-171		1	BY 50	X1							
209-31211-181		1	BY 50	X1							
209-31211-191		2	BY 50	M		0					
209-31211-201		1	BY 50	X1							
209-31211-251		1	BY 50	X1							
209-31211-261		1	BY 50	X1							
209-31211-301		1	BY 50	X1							
209-31211-351		1	BY 50	X1							
209-31211-401		1	BY 50	X1							

PART NUMBER	FIGURE AND INDEX	TOTAL QTY.	MICRO-FILM NUMBER	MAINTENANCE CODE DATA: SOURCE CODE	INST'L CAPABILITY	PRE-INST'L CAPABILITY	RECOVERABILITY	SUPPORT EQUIPMENT	FEDERAL STOCK NUMBER DATA: COGNIZANCE CODE	FEDERAL STOCK NUMBER	MFG. CODE (TSMC)
209-31211-451		1	BY 50	X1							
209-31211-501		1	BY 50	X1							
209-31211-601		1	BY 50	X1							
209-312110- 1		1	BK 95	M		O					
209-312110- 2		1	BK 95	M		O					
209-312111- 1		1	BD 58	M		O					
209-312111- 2		1	BD 58	M		O					
209-312112- 1		1	BD 59	M		O					
209-312112- 2		1	BD 59	M		O					
209-312113- 1		2	BD 60	M		O					
209-312113- 5		4	BD 60	M		O					
209-312114- 1		1	BK 96	M		O					
209-312114- 2		1	BK 96	M		O					
209-312115- 1		1	BD 61	M		O					
209-312115- 2		1	BD 61	M		O					
209-312116		2	BD 62	M		O					
209-312117- 1		1	BD 63	M		O					
209-312117- 2		1	BD 63	M		O					
209-312118- 1		1	BK 97	M		O					
209-312118- 2		1	BK 97	M		O					
209-312118- 3		1	BK 97	M		O					
209-312118- 4		1	BK 97	M		O					
209-312119- 1		1	BQ265	M		O					
209-312119- 2		1	BQ265	M		O					
209-31212	43	1	DH 43	A		O					
209-31212- 3		1	DH 43	M		O					
209-31212- 5		1	DH 43	M		O					
209-31212- 15		2	DH 43	M		O					
209-31212- 17		1	DH 43								
209-31212- 21		1	DH 43	M		O					
209-31212- 23		1	DH 43	M		O					
209-31212- 25		1	DH 43	M		O					
209-31212- 27		1	DH 43	M		O					
209-31212- 29		1	DH 43	M		O					
209-31212- 37		1	DH 43	M		O					
209-31212- 39		2	DH 43	M		O					
209-31212- 41		2	DH 43	M		O					
209-31212- 43		1	DH 43	M		O					
209-31212- 51		2	DH 43	M		O					
209-31212- 55		1	DH 43	M		O					
209-31212- 57		1	DH 43	M		O					
209-31212- 59		1	DH 43	M		O					
209-31212- 60		1	DH 43	M		O					
209-31212- 61		1	DH 43	M		O					
209-31212- 65		1	DH 43	M		O					
209-31212- 75		1	DH 43	M		O					
209-31212- 77		1	DH 43	M		O					
209-31212- 79		2	DH 43	M		O					
209-31212-101	43	1	DH 43	A		O					
209-31212-151	43	1	DH 43	A		O					
209-31212-161	43	1	DH 43	A		O					
209-31212-171	43	1	DH 43	A		O					
209-31212-181	43	1	DH 43	A		O					
209-31212-191	43	1	DH 43	A		O					
209-31212-201	43	1	DH 43	A		O					
209-31212-251	43	1	DH 43	A		O					
209-31212-301	43	1	DH 43	A		O					
209-31212-401	43	1	DH 43	A		O					
209-31212-501	43	1	DH 43	A		O					
209-312120		1	DR 62								
209-31213		1	CJ269	M		O					
209-31214- 7		1	CA177	M		O					
209-31214- 8		1	CA177	M		O					
209-31215- 1		1	CJ245	M		O					
209-31215- 2		1	CJ245	M		O					
209-31215- 3		1	CJ245	M		O					
209-31215- 4		1	CJ245	M		O					
209-31215- 5		2	CJ245	M		O					
209-31216- 1		1	BF236	M		O					
209-31216- 2		1	BF236	M		O					
209-31217- 1	43 - 1	1	BR 5	M		O					
209-31217- 2	43	1	BR 5	M		O					
209-31217- 3		1	BR 5	M		O					
209-31217- 4		1	BR 5	M		O					
209-31217- 5		2	BR 5	M		O					
209-31217- 7		2	BR 5	M		O					
209-31217- 9		2	BR 5	M		O					
209-31218- 1	43 - 42	1	BQ254	M		O					
209-31218- 2	43	1	BQ254	M		O					
209-31218- 3		1	BQ254	M		O					
209-31218- 4		1	BQ254	M		O					
209-31218- 5		AR	BQ254	M		O					
209-31218- 7		4	BQ254	M		O					
209-31219		1	BQ240	U							
209-31221	43 - 44	2	BF237	M		O					
209-31221- 3		2	BF237	M		O					
209-31222- 3		1	BK102	M		O					
209-31222- 4		1	BK102	M		O					
209-31222- 5		1	BK102	M		O					
209-31222- 6		1	BK102	M		O					
209-31223- 1		1	BK103	M		O					
209-31223- 2		1	BK103	M		O					
209-31224- 1		1	BQ237	M		O					
209-31224- 2		1	BQ237	M		O					
209-31224- 3		1	BQ237	M		O					
209-31224- 4		1	BQ237	M		O					
209-31224- 5		1	BQ237	M		O					
209-31224- 6		1	BQ237	M		O					
209-31225- 1		1	BK104	M		O					
209-31225- 2		1	BK104	M		O					
209-31225- 3		1	BK104	M		O					
209-31225- 4		1	BK104	M		O					
209-31225- 5		1	BK104	M		O					
209-31225- 6		1	BK104	M		O					
209-31225- 7		2	BK104	M		O					

PART NUMBER	FIGURE AND INDEX	TOTAL QTY.	MICRO-FILM NUMBER	MAINTENANCE CODE DATA: SOURCE CODE	INST'L CAPABILITY	PRE-INST'L CAPABILITY	RECOVERABILITY	SUPPORT EQUIPMENT	FEDERAL STOCK NUMBER DATA: COGNIZANCE CODE	FEDERAL STOCK NUMBER	MFG. CODE (TSMC)
209-31226		2	BF238	M		O					
209-31227- 1	43 - 3	1	BQ257	M		O					
209-31227- 2	43	1	BQ257	M		O					
209-31228	39 - 50	1	BK105	M		O					
209-31228- 3		1	BK105	M		O					
209-31229	39 - 57	1	BK109	M		O					
209-31229- 3		1	BK109	M		O					
209-31230	39 - 58	1	BK107	P1					R	1560-303-8574	ANAA
209-31231- 1		1	BQ247	M		O					
209-31231- 2		1	BQ247	M		O					
209-31231- 3		1	BQ247	M		O					
209-31231- 4		1	BQ247	M		O					
209-31231- 5		1	BQ247	M		O					
209-31231- 11		1	BQ247	M		O					
209-31232- 1		1	CJ262	M		O					
209-31232- 2		1	CJ262	M		O					
209-31233- 1		1	BK108	M		O					
209-31233- 2		1	BK108	M		O					
209-31234- 1		1	BK112	M		O					
209-31234- 2		1	BK112	M		O					
209-31235- 1		1	CN 54	M		O					
209-31235- 2		1	CN 54	M		O					
209-31236- 3		4	CJ319	M		O					
209-31236- 5		4	CJ319	M		O					
209-31237- 1		2	BF240	M		O					
209-31237- 2		2	BF240	M		O					
209-31238- 1		1	BK110	M		O					
209-31238- 2		1	BK110	M		O					
209-31239	43	1	BQ269	M		O					
209-31239- 3		1	BQ269	M		O					
209-31239- 5		1	BQ269	M		O					
209-31239- 7		1	BQ269	M		O					
209-31239- 9		1	BQ269	M		O					
209-31239- 11		1	BQ269	M		O					
209-31239- 13		1	BQ269	M		O					
209-31239- 15		1	BQ269	M		O					
209-31239- 17		1	BQ269	M		O					
209-31239- 19		1	BQ269	M		O					
209-31239- 21		1	BQ269	M		O					
209-31239- 23		5	BQ269	M		O					
209-31239- 25		1	BQ269	M		O					
209-31239- 27		1	BQ269	M		O					
209-31239- 29		1	BQ269	M		O					
209-31239- 31		1	BQ269	M		O					
209-31239- 33		1	BQ269	M		O					
209-31239- 35		1	BQ269	M		O					
209-31239- 37		1	BQ269	M		O					
209-31239- 39		1	BQ269	M		O					
209-31239- 41		1	BQ269	M		O					
209-31239- 43		1	BQ269	M		O					
209-31239- 45		1	BQ269	M		O					
209-31239- 57		1	BQ269	M		O					
209-31239- 59		1	BQ269								
209-31239- 61		5	BQ269	M		O					
209-31239- 65		1	BQ269	M		O					
209-31239- 67		1	BQ269	M		O					
209-31239- 71		1	BQ269	M		O					
209-31239- 81		1	BQ269	M		O					
209-31239-101		1	BQ269	M		O					
209-31239-121		1	BQ269	M		O					
209-31239-123		1	BQ269	M		O					
209-31239-171		1	BQ269	M		O					
209-31239-201	43	1	BQ269	M		O					
209-31239-301	43	1	BQ269								
209-31240	43 - 47	1	BW 71	M		O					
209-31240- 3		1	BW 71	M		O					
209-31240- 5		1	BW 71	M		O					
209-31240- 7		1	BW 71	M		O					
209-31240- 9		1	BW 71	M		O					
209-31240- 11		1	BW 71	M		O					
209-31240- 13		1	BW 71	M		O					
209-31240- 15		3	BW 71								
209-31240- 17		1	BW 71	M		O					
209-31240- 19		1	BW 71	M		O					
209-31240- 21		1	BW 71	M		O					
209-31240- 23		1	BW 71	M		O					
209-31240- 25		1	BW 71	M		O					
209-31240- 27		1	BW 71	M		O					
209-31240- 33		4	BW 71	M		O					
209-31240- 41		1	BW 71	M		O					
209-31240- 43		1	BW 71	M		O					
209-31240- 47		1	BW 71	M		O					
209-31240- 49		1	BW 71	M		O					
209-31240- 51		4	BW 71	M		O					
209-31240- 53		1	BW 71	M		O					
209-31240- 59		1	BW 71	M		O					
209-31240- 61		3	BW 71	M		O					
209-31240- 71		1	BW 71	M		O					
209-31240- 81		1	BW 71	M		O					
209-31240- 91		1	BW 71	M		O					
209-31240- 93		1	BW 71	M		O					
209-31240- 95		1	BW 71	M		O					
209-31240- 97		1	BW 71	M		O					
209-31240-101	43	1	BW 71	M		O					
209-31240-201		1	BW 71	M		O					
209-31241- 1		1	BK113	M		O					
209-31241- 2		1	BK113	M		O					
209-31242- 1		1	BQ238	M		O					
209-31242- 2		1	BQ238	M		O					
209-31243		1	BF241	M		O					
209-31244- 1		1	BF242	M		O					
209-31244- 2		1	BF242	M		O					
209-31245	43 - 61 43 - 62	4	BM337	M		O					
209-31246	39 - 80	4	BN 11	M		O					

PART NUMBER	FIGURE AND INDEX	TOTAL QTY.	MICRO-FILM NUMBER	MAINTENANCE CODE DATA: SOURCE CODE	INST'L CAPABILITY	PRE-INST'L CAPABILITY	RECOVERABILITY	SUPPORT EQUIPMENT	COGNIZANCE CODE	FEDERAL STOCK NUMBER DATA: FEDERAL STOCK NUMBER	MFG. CODE (TSMC)
	39 - 81										
	43 - 61										
	43 - 62										
209-31246- 3		4	BN 11	M		O					
209-31246- 5		4	BN 11	M		O					
209-31248	39	1	BC 69	M		O					
209-31249- 1		1	DG 24	M		O					
209-31249- 2		1	DG 24	M		O					
209-31250- 1		1	DK188	M		O					
209-31250- 2		1	DK188	M		O					
209-31250- 5		2	DK188	M		O					
209-31250- 7		2	DK188	M		O					
209-31250- 11		2	DK188	M		O					
209-31250-101		1	DK188	M		O					
209-31250-102		1	DK188	M		O					
209-31252- 9		1	BQ239	M		O					
209-31252- 4		1	BQ239	M		O					
209-31253		1	DQ275								
209-31255- 1		1	BQ246	M		O					
209-31255- 2		1	BQ246	M		O					
209-31255- 51		1	BQ246	M		O					
209-31255- 52		1	BQ246	M		O					
209-31256- 1		1	BK114	M		O					
209-31256- 2		1	BK114	M		O					
209-31257- 1		1	BF244	M		O					
209-31257- 2		1	BF244	M		O					
209-31258- 1		1	BF245	M		O					
209-31258- 2		1	BF245	M		O					
209-31259- 1		1	BQ266	M		O					
209-31259- 2		1	BQ266	M		O					
209-31260- 1		1	BQ236	M		O					
209-31260- 2		1	BQ236	M		O					
209-31261- 1		1	DJ294	M		O					
209-31261- 2		1	DJ294	M		O					
209-31261- 3		1	DJ294	M		O					
209-31261- 4		1	DJ294	M		O					
209-31261- 5		1	DJ294	M		O					
209-31261- 6		1	DJ294	M		O					
209-31262- 1		1	BK115	M		O					
209-31262- 2		1	BK115	M		O					
209-31263		2	BD 64	M		O					
209-31264- 1		1	BF246	M		O					
209-31264- 2		1	BF246	M		O					
209-31265- 1		1	BD 65	M		O					
209-31265- 2		1	BD 65	M		O					
209-31266- 1		1	BF247	M		O					
209-31266- 2		1	BF247	M		O					
209-31267- 1		1	DG143	M		O					
209-31267- 2		1	DG143	M		O					
209-31268- 1		1	DG140	M		O					
209-31268- 2		1	DG140	M		O					
209-31269- 1		1	DL235	M		O					
209-31269- 2		1	DL235	M		O					
209-31270		4	DN 93								
209-31271- 1		1	BF251	M		O					
209-31271- 2		1	BF251	M		O					
209-31272- 1		1	BK116	M		O					
209-31272- 2		1	BK116	M		O					
209-31276- 1		1	BR 8	M		O					
209-31276- 2		1	BR 8	M		O					
209-31277- 1		1	BD 67	M		O					
209-31277- 2		1	BD 67	M		O					
209-31277- 3		1	BD 67	M		O					
209-31277- 4		1	BD 67	M		O					
209-31277- 5		2	BD 67	M		O					
209-31279	43 - 82	1	BK117								
	264 - 95	1									
209-31280	43 - 64	1	BF252	M		O					
	264 - 96	1									
209-31281	43 - 81	1	BF253	M		O					
	264 - 94	1									
209-31282		1	BK118	M		O					
209-31283		1	BK119	M		O					
209-31283- 3		1	BK119	M		O					
209-31283- 5		1	BK119	M		O					
209-31283- 7		1	BK119	M		O					
209-31284		1	BK120	M		O					
209-31284- 3		1	BK120								
209-31284- 5		1	BK120								
209-31284- 7		1	BK120	M		O					
209-31284- 9		1	BK120	M		O					
209-31290	43 - 38	1	BU153	A		O					
209-31290- 3		1	BU153	M		O					
209-31290- 4		1	BU153	M		O					
209-31290- 5		1	BU153	M		O					
209-31290- 6		1	BU153	M		O					
209-31290- 8		1	BU153	M		O					
209-31290- 9		2	BU153	M		O					
209-31290- 11		1	BU153	M		O					
209-31290- 13		1	BU153	M		O					
209-31290- 15		1	BU153	M		O					
209-31290- 17		1	BU153	M		O					
209-31290- 19		1	BU153	M		O					
209-31290- 21		1	BU153	M		O					
209-31290- 27		2	BU153	M		O					
209-31290- 39		1	BU153	M		O					
209-31290- 41		1	BU153	M		O					
209-31290- 45		2	BU153	M		O					
209-31290- 49		1	BU153	M		O					
209-31290- 50		1	BU153	M		O					
209-31290- 61		1	BU153	M		O					
209-31290- 67	39 - 38	1	BU153	M		O					
209-31290- 69		1	BU153	M		O					
209-31290- 73		1	BU153	M		O					
209-31290- 77		1	BU153	M		O					

PART NUMBER	FIGURE AND INDEX	TOTAL QTY.	MICRO-FILM NUMBER	MAINTENANCE CODE DATA: SOURCE CODE	INST'L CAPABILITY	PRE-INST'L CAPABILITY	RECOVERABILITY	SUPPORT EQUIPMENT	COGNIZANCE CODE	FEDERAL STOCK NUMBER DATA: FEDERAL STOCK NUMBER	MFG. CODE (TSMC)
209-31290- 79		1	BU153	M		O					
209-31290- 81		2	BU153	M		O					
209-31290- 83		1	BU153	M		O					
209-31290- 85		1	BU153	M		O					
209-31290- 87		2	BU153	M		O					
209-31290- 89		1	BU153	M		O					
209-31290- 91		1	BU153	M		O					
209-31290- 93		1	BU153	M		O					
209-31290- 95		2	BU153	M		O					
209-31290- 97		1	BU153	M		O					
209-31290-101	43	1	BU153	A		O					
209-31290-103		1	BU153	M		O					
209-31290-105		1	BU153	M		O					
209-31290-107		2	BU153	M		O					
209-31290-109		1	BU153	M		O					
209-31290-111		1	BU153	M		O					
209-31290-113		1	BU153	M		O					
209-31290-118		1	BU153	M		O					
209-31290-201	43	1	BU153	A		O					
209-31291	43 -101	1	BQ271	P1	F	O	S		R	1560-569-1602	ANAA
209-31291- 3		1	BQ271	X1							
209-31293		1	DD174	M		O					
209-31293- 3		1	DD174	M		O					
209-31294		1	DE131	M		O					
209-31299	43 - 39	1	BQ 5	M		O					
209-31299- 3		1	BQ 5	M		O					
209-31299- 4		1	BQ 5	M		O					
209-31299- 5		1	BQ 5	M		O					
209-31299- 6		1	BQ 5	M		O					
209-31299- 7		1	BQ 5	M		O					
209-31299- 8		1	BQ 5	M		O					
209-31299- 9		1	BQ 5	M		O					
209-31299- 10		1	BQ 5	M		O					
209-31299- 13		1	BQ 5	M		O					
209-31299- 17		1	BQ 5	M		O					
209-31299- 18		1	BQ 5	M		O					
209-31299- 19		2	BQ 5	M		O					
209-31299- 31		1	BQ 5	M		O					
209-31299- 33		1	BQ 5	M		O					
209-31299- 34		1	BQ 5	M		O					
209-31299- 43		1	BQ 5	M		O					
209-31299- 44		1	BQ 5	M		O					
209-31299- 45		1	BQ 5	M		O					
209-31299- 47		1	BQ 5								
209-31299- 49		1	BQ 5	M		O					
209-31299- 50		1	BQ 5	M		O					
209-31299- 51		1	BQ 5	M		O					
209-31299- 53		2	BQ 5	M		O					
209-31299- 55		1	BQ 5	M		O					
209-31299- 56		1	BQ 5	M		O					
209-31299- 57		1	BQ 5	M		O					
209-31299- 58		1	BQ 5	M		O					
209-31299- 59		1	BQ 5	M		O					
209-31299- 61		1	BQ 5	M		O					
209-31299- 63		1	BQ 5	M		O					
209-31299- 65		1	BQ 5	M		O					
209-31299- 66		1	BQ 5	M		O					
209-31299- 69		1	BQ 5	M		O					
209-31299- 70		1	BQ 5	M		O					
209-31299- 73		1	BQ 5	M		O					
209-31299- 77		1	BQ 5	M		O					
209-31299- 78		1	BQ 5	M		O					
209-31299- 84		1	BQ 5	M		O					
209-31299-101	43	1	BQ 5	M		O					
209-31299-201	43	1	BQ 5	M		O					
209-31300- 1		1	BK121	M		O					
209-31300- 2		1	BK121	M		O					
209-31300- 3		2	BK121	M		O					
209-31300- 5		1	BK121	M		O					
209-31300- 6		1	BK121	M		O					
209-31300- 11		1	BK121	M		O					
209-31300- 12		1	BK121	M		O					
209-31300- 21		1	BK121	M		O					
209-31300- 22		1	BK121	M		O					
209-31301- 1		1	BK122	M		O					
209-31301- 2		1	BK122	M		O					
209-31302- 1		1	BK123	M		O					
209-31302- 2		1	BK123	M		O					
209-31305- 1		1	BK124	M		O					
209-31305- 2		1	BK124	M		O					
209-31306	43	1	DR150	M		O					
209-31306- 3		1	DR150	M		O					
209-31306- 5		1	DR150	M		O					
209-31306- 6		1	DR150	M		O					
209-31306- 7		1	DR150	M		O					
209-31306- 8		1	DR150	M		O					
209-31306- 9		1	DR150	M		O					
209-31306- 11		2	DR150	M		O					
209-31306- 13		2	DR150	M		O					
209-31306- 21		1	DR150	M		O					
209-31306- 22		1	DR150	M		O					
209-31306- 29		1	DR150	M		O					
209-31306- 30		1	DR150	M		O					
209-31306- 33		1	DR150	M		O					
209-31306- 34		1	DR150	M		O					
209-31306- 37		1	DR150	M		O					
209-31306- 38		1	DR150	M		O					
209-31306- 39		1	DR150	M		O					
209-31306- 40		1	DR150	M		O					
209-31306- 43		1	DR150	M		O					
209-31306- 44		1	DR150	M		O					
209-31306- 45		2	DR150	M		O					
209-31306- 47		1	DR150	M		O					
209-31306- 48		1	DR150	M		O					
209-31306- 49		2	DR150	M		O					

PART NUMBER	FIGURE AND INDEX	TOTAL QTY.	MICRO-FILM NUMBER	MAINTENANCE CODE DATA: SOURCE CODE	INST'L CAPABILITY	PRE-INST'L CAPABILITY	RECOVERABILITY	SUPPORT EQUIPMENT	FEDERAL STOCK NUMBER DATA: COGNIZANCE CODE	FEDERAL STOCK NUMBER	MFG. CODE (TSMC)
209-31306- 51		1	DR150	M		0					
209-31306- 52		1	DR150	M		0					
209-31306- 53		1	DR150	M		0					
209-31306- 54		1	DR150	M		0					
209-31306- 55		1	DR150	M		0					
209-31306- 56		1	DR150	M		0					
209-31306- 57		1	DR150	M		0					
209-31306- 58		1	DR150	M		0					
209-31306- 59		1	DR150	M		0					
209-31306- 60		1	DR150	M		0					
209-31306- 61		1	DR150	M		0					
209-31306- 63		1	DR150	M		0					
209-31306- 64		1	DR150	M		0					
209-31306- 65		1	DR150	M		0					
209-31306- 66		1	DR150	M		0					
209-31306- 67		1	DR150	M		0					
209-31306- 69		1	DR150	M		0					
209-31306- 74		1	DR150	M		0					
209-31306-101	43	1									
209-31306-201	43	1	DR150	M		0					
209-31308- 1		1	BK125	M		0					
209-31308- 2		1	BK125	M		0					
209-31310- 1		1		M		0					
209-31310- 2		1		M		0					
209-31311- 1		2	BD 68	M		0					
209-31311- 3		2	BD 68	M		0					
209-31312- 3	39	4	BF254	M		0					
209-31312- 5	39	2	BF254	M		0					
209-31312- 7	39	2	BF254	M		0					
209-31312- 11	39	4	BF254	M		0					
209-31312- 13	39	2	BF254	M		0					
209-31312- 15	39	2	BF254	M		0					
209-31313- 3		2	BF255	M		0					
209-31313- 5		2	BF255	M		0					
209-31314- 1		1	BF256	M		0					
209-31314- 2		1	BF256	M		0					
209-31315- 1	43 - 63	1	BK126	M		0					
209-31315- 2	43	1	BK126	M		0					
209-31316- 3		1	DJ 87	M		0					
209-31316- 5		1	DJ 87	M		0					
209-31316- 7		1	DJ 87	M		0					
209-31316- 8		1	DJ 87	M		0					
209-31316- 9		1	DJ 87	M		0					
209-31316- 10		1	DJ 87	M		0					
209-31316- 11		1	DJ 87	M		0					
209-31316- 12		1	DJ 87	M		0					
209-31316- 13		1	DJ 87	M		0					
209-31316- 14		1	DJ 87	M		0					
209-31316- 15		1	DJ 87	M		0					
209-31316- 16		1	DJ 87	M		0					
209-31316- 19		1	DJ 87	M		0					
209-31316- 20		1	DJ 87	M		0					
209-31316- 21		1	DJ 87	M		0					
209-31316- 22		1	DJ 87	M		0					
209-31316- 27		1	DJ 87	M		0					
209-31316- 28		1	DJ 87	M		0					
209-31316- 31		1	DJ 87	M		0					
209-31316- 35		1	DJ 87	M		0					
209-31316- 36		1	DJ 87	M		0					
209-31316- 39		1	DJ 87	M		0					
209-31316- 41		1	DJ 87	M		0					
209-31316- 43		1	DJ 87	M		0					
209-31316- 47		1	DJ 87	M		0					
209-31316- 48		1	DJ 87	M		0					
209-31316- 49		2	DJ 87	M		0					
209-31316- 51		1	DJ 87	M		0					
209-31316- 52		1	DJ 87	M		0					
209-31316- 53		1	DJ 87	M		0					
209-31316-101	43	1	DJ 87	M		0					
209-31317		1	CG244	A		0					
209-31317- 3		1	CG244	M		0					
209-31317- 5		1	CG244	M		0					
209-31317- 6		1	CG244	M		0					
209-31317- 7		1	CG244	M		0					
209-31317- 9		1	CG244	M		0					
209-31317- 11		1	CG244	M		0					
209-31317- 13		1	CG244	M		0					
209-31317- 14		1	CG244	M		0					
209-31317- 15		1	CG244	M		0					
209-31317- 16		1	CG244	M		0					
209-31317- 17		1	CG244	M		0					
209-31317- 19		1	CG244	M		0					
209-31317- 21		2	CG244	M		0					
209-31317- 23		1	CG244	M		0					
209-31317- 25		2	CG244	M		0					
209-31317- 27		1	CG244	M		0					
209-31317- 29		1	CG244	M		0					
209-31317- 31		2	CG244	M		0					
209-31317- 33		1	CG244	M		0					
209-31317- 35		1	CG244								
209-31317- 37		1	CG244	M		0					
209-31317- 39		1	CG244								
209-31317- 41		1	CG244	M		0					
209-31317- 43		1	CG244	M		0					
209-31317- 45		1	CG244	M		0					
209-31317- 47		1	CG244	M		0					
209-31317- 53		1	CG244	M		0					
209-31317- 54		1	CG244	M		0					
209-31317- 59		1	CG244	M		0					
209-31317-101		1	CG244	M		0					
209-31318- 1		1	BK127	M		0					
209-31318- 2		1	BK127	M		0					
209-31319		1	BK128	M		0					
209-31320		1	BK129	M		0					
209-31321- 1		1	BK130	M		0					

PART NUMBER	FIGURE AND INDEX	TOTAL QTY.	MICRO-FILM NUMBER	MAINTENANCE CODE DATA: SOURCE CODE	INST'L CAPABILITY	PRE-INST'L CAPABILITY	RECOVERABILITY	SUPPORT EQUIPMENT	FEDERAL STOCK NUMBER DATA: COGNIZANCE CODE	FEDERAL STOCK NUMBER	MFG. CODE (TSMC)
209-31321- 2		1	BK130	M		0					
209-31323- 1		1	BK132	M		0					
209-31323- 2		1	BK132	M		0					
209-31323- 3		1	BK132	M		0					
209-31323- 4		1	BK132	M		0					
209-31324- 1		1	DJ243	M		0					
209-31324- 2		1	DJ243	M		0					
209-31325- 1		1	DJ244	M		0					
209-31325- 2		1	DJ244	M		0					
209-31325- 3		1	DJ244	M		0					
209-31325- 4		1	DJ244	M		0					
209-31326- 1		1	BK133	M		0					
209-31326- 2		1	BK133	M		0					
209-31327- 1	43 -105	1	BQ260	M		0					
209-31327- 2	43 -105	1	BQ260	M		0					
209-31327- 4		1	BQ260	M		0					
209-31327- 5		1	BQ260	M		0					
209-31327- 7		1	BQ260	M		0					
209-31327- 9		1	BQ260	M		0					
209-31327- 11	43 - 84	1	BQ260	M		0					
209-31327- 21	43	1	BQ260	M		0					
209-31327- 22	43	1	BQ260	M		0					
209-31327- 24		1	BQ260	M		0					
209-31327- 25		1	BQ260	M		0					
209-31328- 1		1	BK134	M		0					
209-31328- 2		1	BK134	M		0					
209-31328- 3		1	BK134	M		0					
209-31328- 4		1	BK134	M		0					
209-31328- 5		1	BK134	M		0					
209-31328- 6		1	BK134	M		0					
209-31328- 7		2	BK134	M		0					
209-31328- 9		1	BK134	M		0					
209-31328- 10		1	BK134	M		0					
209-31330- 1	39 - 45	1	BK135	M		0					
209-31330- 2	39	1	BK135	M		0					
209-31330- 3		1	BK135	M		0					
209-31330- 4		1	BK135	M		0					
209-31330- 5		1	BK135	M		0					
209-31330- 6		1	BK135	M		0					
209-31330- 7		1	BK135	M		0					
209-31330- 8		1	BK135	M		0					
209-31330- 9		1	BK135	M		0					
209-31330- 10		1	BK135	M		0					
209-31331	42 - 82	2	BD 69	M		0					
209-31332	42 - 84	2	BD 70	M		0					
209-31333- 1		1	BF257	M		0					
209-31333- 2		1	BF257	M		0					
209-31334		2	DQ276	M		0					
209-31335- 3		1	BK137	M		0					
209-31335- 4		1	BK137	M		0					
209-31336- 1		1	BF258	M		0					
209-31336- 2		1	BF258	M		0					
209-31338- 1		1	BK138	M		0					
209-31338- 2		1	BK138	M		0					
209-31339- 1		1	BK139	M		0					
209-31339- 2		1	BK139	M		0					
209-31340		2	BK140	M		0					
209-31341- 1		1	BD 71	M		0					
209-31341- 2		1	BD 71	M		0					
209-31342		1	BD 72	M		0					
209-31343		1	BD 73	M		0					
209-31344- 1		1	BF259	M		0					
209-31344- 2		1	BF259	M		0					
209-31345		1	BR 24	M		0					
209-31345- 3		1	BR 24	M		0					
209-31345- 5		1	BR 24	M		0					
209-31345- 7		1	BR 24	M		0					
209-31345- 9		1	BR 24	M		0					
209-31345- 11		1	BR 24	M		0					
209-31345- 13		1	BR 24	M		0					
209-31345- 51		1	BR 24	M		0					
209-31346		1	BK141								
209-31346- 3		1	BK141								
209-31346- 21		1	BK141	M		0					
209-31347		1	BK142	M		0					
209-31347- 11		1	BK142	M		0					
209-31348	39 - 52	1							R	1560-571-7119	ANAA
	122 - 5										
	209 - 28										
209-31348- 3		1	DJ284	X1							
209-31348- 5		1	DJ284	X1							
209-31348- 7		2	DJ284	X1							
209-31348- 9		2	DJ284	X1							
209-31348- 11		1	DJ284	X1							
209-31348- 12		1	DJ284	X1							
209-31348- 13		1	DJ284	X1							
209-31348- 14		1	DJ284	X1							
209-31349		1	DJ279						R	1560-571-7120	ANAA
209-31350- 3		1	DJ269	M		0					
209-31350- 4		1	DJ269	M		0					
209-31350- 5		1	DJ269	M		0					
209-31350- 7		1	DJ269	M		0					
209-31350- 8		1	DJ269	M		0					
209-31350- 9		1	DJ269	M		0					
209-31350- 10		1	DJ269	M		0					
209-31350- 11		1	DJ269	M		0					
209-31350- 13		1	DJ269	M		0					
209-31350- 15		1	DJ269	M		0					
209-31350- 17		1	DJ269	M		0					
209-31350- 19		1	DJ269	M		0					
209-31350- 21		1	DJ269	M		0					
209-31350- 23		1	DJ269	M		0					
209-31350- 25		1	DJ269	M		0					
209-31350- 27		1	DJ269	M		0					
209-31350- 51		1	DJ269	M		0					

PART NUMBER	FIGURE AND INDEX	TOTAL QTY.	MICRO-FILM NUMBER	MAINTENANCE CODE DATA: SOURCE CODE	INSTL CAPABILITY	PRE-INSTL CAPABILITY	RECOVERABILITY	SUPPORT EQUIPMENT	COGNIZANCE CODE	FEDERAL STOCK NUMBER DATA: FEDERAL STOCK NUMBER	MFG. CODE (TSMC)
209-31351		1	DJ245	M		0					
209-31352		1	DJ202	M		0					
209-31353		1	DJ203	M		0					
209-31354		1	DJ204	M		0					
209-31355		1	BK143	M		0					
209-31356		1	BK144	M		0					
209-31357- 1		1	BF260	M		0					
209-31357- 2		1	BF260	M		0					
209-31362- 1		1	BF261	M		0					
209-31362- 2		1	BF261	M		0					
209-31382- 1		1	BK145	M		0					
209-31382- 2		1	BK145	M		0					
209-31382- 3		1	BK145	M		0					
209-31382- 4		1	BK145	M		0					
209-31382- 5		2	BK145	M		0					
209-31385- 1		1	BK146	M		0					
209-31385- 2		1	BK146	M		0					
209-31386- 1		1	BK147	M		0					
209-31386- 2		1	BK147	M		0					
209-31386- 12		1	BK147	M		0					
209-31388- 1		1	DG159	M		0					
209-31388- 2		1	DG159	M		0					
209-31397- 1		2	BF262	M		0					
209-31397- 2		2	BF262	M		0					
209-31398- 1		1	BF263	M		0					
209-31398- 2		1	BF263	M		0					
209-31399- 1		1	BK148	M		0					
209-31399- 2		1	BK148	M		0					
209-31400	48 - 49	1	BR 36	P1	0	0	S		R	1560-031-4967	ANAA
209-31402	69 - 19	1	BR 35	P1	0	0	S		R	1560-031-4968	ANAA
209-31402- 3		1	BR 35	X1							
209-31404- 1		10	BF264	M		0					
209-31404- 2		10	BF264	M		0					
209-31405- 1		1	BR 33	M		0					
209-31405- 2		1	BR 33	M		0					
209-31405- 3		1	BR 33	M		0					
209-31405- 4		1	BR 33	M		0					
209-31405- 5		2	BR 33	M		0					
209-31407- 11		1	BR 37	M		0					
209-31407- 12		1	BR 37	M		0					
209-31407- 13		2	BR 37	M		0					
209-31407- 21		1	BR 37	M		0					
209-31407- 27		1	BR 37	M		0					
209-31408- 11		1	BR 22	M		0					
209-31408- 12		1	BR 22	M		0					
209-31409		1	DK 45	A		0					
209-31409- 3		1	DK 45	M		0					
209-31409- 5		1	DK 45	M		0					
209-31409- 7		2	DK 45	M		0					
209-31409- 9		2	DK 45	M		0					
209-31409- 11		1	DK 45	M		0					
209-31409- 12		1	DK 45	M		0					
209-31409- 17		1	DK 45	M		0					
209-31409- 19		2	DK 45	M		0					
209-31409- 21		1	DK 45	M		0					
209-31409- 23		1	DK 45	M		0					
209-31409- 27		2	DK 45	M		0					
209-31409- 29		1	DK 45	M		0					
209-31409- 31		1	DK 45	M		0					
209-31409- 33		1	DK 45	M		0					
209-31409- 35		2	DK 45	M		0					
209-31409- 37		1	DK 45	M		0					
209-31409- 39		1	DK 45	M		0					
209-31409- 43		1	DK 45	M		0					
209-31409- 45		1	DK 45	M		0					
209-31409- 47		1	DK 45	M		0					
209-31409- 49		1	DK 45	M		0					
209-31409- 51		1	DK 45	M		0					
209-31409- 53		1	DK 45	M		0					
209-31409- 55		1	DK 45	M		0					
209-31409- 57		1	DK 45	M		0					
209-31409- 58		1	DK 45	M		0					
209-31409- 59		1	DK 45	M		0					
209-31409- 60		1	DK 45	M		0					
209-31409- 67		2	DK 45	M		0					
209-31409- 69		2	DK 45	M		0					
209-31409-101		1	DK 45	A		0					
209-31410- 3	49 - 17	1	CN 72	X2							
209-31410- 4	49 - 18	1	CN 72	X2							
209-31401- 7		6	BF265	M		0					
209-31401- 8		6	BF265	M		0					
209-31402- 1	69 - 27	1	BF266	M		0					
209-31402- 2	69 - 28	1	BF266	M		0					
209-31404	69 - 30	1	BK149						R	1560-570-2263	ANAA
209-31404- 3		7	BK149	M		0					
209-31404- 5		2	BK149	M		0					
209-31404- 7		2	BK149	M		0					
209-31405		1	BF267								
209-31405- 1		1	BF267	M		0					
209-31405- 2		1	BF267	M		0					
209-31405- 1		1	BD 75								
209-31406- 2		1	BD 75								
209-31406- 11	44 -149	1	BD 75	M		0					
209-31406- 12	44 -148	1	BD 75	M		0					
209-31407- 1		1	BR 28	M		0					
209-31407- 2		1	BR 28	M		0					
209-31408		1	BK150	M		0					
209-31409		1	BK151	M		0					
209-31411		1	CA187	A		0					
209-31411- 3		2	CA187	M		0					
209-31411- 5		1	CA187	M		0					
209-31411- 6		1	CA187	M		0					
209-31411- 7		2	CA187	M		0					
209-31411- 9		1	CA187	M		0					
209-31411- 11		1	CA187	M		0					
209-31411- 13		1	CA187	M		0					
209-31411- 15		2	CA187	M		0					
209-31411- 17		1	CA187	M		0					
209-31411- 18		1	CA187	M		0					
209-31411- 19		1	CA187	M		0					
209-31411- 20		1	CA187	M		0					
209-31411- 25		1	CA187	M		0					
209-31411- 26		1	CA187	M		0					
209-31411- 27		1	CA187	M		0					
209-31411- 28		1	CA187	M		0					
209-31411- 29		1	CA187								
209-31411- 30		1	CA187								
209-31411- 31		1	CA187	M		0					
209-31411- 32		1	CA187	M		0					
209-31411- 35		2	CA187	M		0					
209-31411- 36		2	CA187	M		0					
209-31411- 37		1	CA187	M		0					
209-31411- 38		1	CA187	M		0					
209-31411- 41		1	CA187	M		0					
209-31411- 42		1	CA187	M		0					
209-31411-101		1	CA187	A		0					
209-31411-151		1	CA187	A		0					
209-31411-161		1	CA187	A		0					
209-31411-171		1	CA187	A		0					
209-31411-181		1	CA187	A		0					
209-31411-201		1	CA187	A		0					
209-314110	44 -140	1	BF268	P1	F	0	S		R	1560-031-4969	ANAA
209-314111	44 -143	2	BD 76	M		0					
209-314113		1	BR 32	M		0					
209-314113- 3		1	BR 32	M		0					
209-314114		1	BR 21	M		0					
209-314114- 3		1	BR 21	M		0					
209-314114- 5		1	BR 21	M		0					
209-314115- 1		1	DJ205	M		0					
209-314115- 2		1	DJ205	M		0					
209-314116- 1		1	BK152	M		0					
209-314116- 2		1	BK152	M		0					
209-314117- 1		1	BF269	M		0					
209-314117- 2		1	BF269	M		0					
209-31412	48 - 48 113 - 25 209 - 19 48 - 48	2	DQ160	M		0					
209-314121- 1		1	BF271	M		0					
209-314121- 2		1	BF271	M		0					
209-314122- 1		1	BF272	M		0					
209-314122- 2		1	BF272	M		0					
209-314123		2	BK154	M		0					
209-314124- 5		2	BF273	M		0					
209-314124- 7		4	BF273	M		0					
209-314124- 9		2	BF273	M		0					
209-314124- 11		2	BF273	M		0					
209-314125- 1		1	BK155	M		0					
209-314125- 2		1	BK155	M		0					
209-314127		1	BR 31	M		0					
209-314127- 3		1	BR 31	M		0					
209-314127- 5		1	BR 31	M		0					
209-314128- 1		1	BK156	M		0					
209-314128- 2		1	BK156	M		0					
209-314129- 1		1	BK157	M		0					
209-314129- 2		1	BK157	M		0					
209-314129- 3		1	BK157	M		0					
209-314129- 4		1	BK157	M		0					
209-314129- 5		1	BK157	M		0					
209-314129- 6		1	BK157	M		0					
209-314129- 7		1	BK157	M		0					
209-31413- 1	49 - 1	1	BY 16	A		0					
209-31413- 2	49 - 2	1	BY 16	A		0					
209-31413- 3		1	BY 16	M		0					
209-31413- 4		1	BY 16	M		0					
209-31413- 5		2	BY 16	M		0					
209-31413- 6		1	BY 16	M		0					
209-31413- 7		2	BY 16	M		0					
209-31413- 9		2	BY 16	M		0					
209-31413- 11		1	BY 16	M		0					
209-31413- 12		1	BY 16	M		0					
209-31413- 15	44 - 92	1	BY 16	M		0					
209-31413- 17		1	BY 16								
209-31413- 19		1	BY 16								
209-31413- 20		1	BY 16								
209-31413- 21		1	BY 16	M		0					
209-31413- 22		1	BY 16	M		0					
209-31413- 31		2	BY 16	M		0					
209-31413- 33		2	BY 16	M		0					
209-31413- 35		2	BY 16	M		0					
209-31413- 37		2	BY 16	M		0					
209-31413- 39	49	1	BY 16	M		0					
209-31413- 41		4	BY 16	M		0					
209-31413- 43		1	BY 16								
209-31413- 44		1	BY 16								
209-31413- 45		1	BY 16	M		0					
209-31413- 46		1	BY 16	M		0					
209-31413- 47		2	BY 16	M		0					
209-31413- 51	49	1	BY 16	A		0					
209-31413- 52	49	1	BY 16	A		0					
209-31413- 61		2	BY 16	M		0					
209-31413- 62	49	1	BY 16								
209-31413- 63		2	BY 16	M		0					
209-31413- 65	44 - 91	1	BY 16	M		0					
209-31413- 66	44	1	BY 16	M		0					
209-31413- 67		1	BY 16	M		0					
209-31413- 68		1	BY 16	M		0					
209-31413- 69		1	BY 16	M		0					
209-31413- 70		1	BY 16	M		0					
209-31413- 71		1	BY 16	M		0					

PART NUMBER	FIGURE AND INDEX	TOTAL QTY.	MICRO-FILM NUMBER	MAINTENANCE CODE DATA: SOURCE CODE	INSTL CAPABILITY	PRE-INSTL CAPABILITY	RECOVERABILITY	SUPPORT EQUIPMENT	FEDERAL STOCK NUMBER DATA: COGNIZANCE CODE	FEDERAL STOCK NUMBER	MFG. CODE (TSMC)
209-31413- 72	49	1	BY 16	A		O					
209-31413- 73		1	BY 16	M		O					
209-31413- 74		1	BY 16	M		O					
209-314130- 1		1	BD 78	M		O					
209-314130- 2		1	BD 78	M		O					
209-314132- 2		1	BD 79	M		O					
209-314134- 1		1	BK158	M		O					
209-314134- 2		1	BK158	M		O					
209-314135		1	DK172								
209-314135- 3		1	DK172	M		O					
209-314135- 4		1	DK172	M		O					
209-314135- 5		1	DK172	M		O					
209-314135- 6		1	DK172	M		O					
209-314135- 7		1	DK172	M		O					
209-314135- 9		1	DK172	M		O					
209-314135- 11		2	DK172	M		O					
209-314135- 15		2	DK172	M		O					
209-314135- 16		2	DK172	M		O					
209-314135- 17		1	DK172	M		O					
209-314135- 19		1	DK172	M		O					
209-314135- 21		1	DK172	M		O					
209-314135- 23		1	DK172	M		O					
209-314135- 29		1	DK172	M		O					
209-314135- 31		1	DK172	M		O					
209-314135- 33		1	DK172	M		O					
209-314135- 35		1	DK172	M		O					
209-314135- 37		1	DK172	M		O					
209-314135- 39		1	DK172	M		O					
209-314135- 41		1	DK172	M		O					
209-314135- 45		1	DK172	M		O					
209-314135- 47		1	DK172	M		O					
209-314135- 49		1	DK172	M		O					
209-314135- 51		1	DK172	M		O					
209-314135- 61		1	DK172	M		O					
209-314135- 63		1	DK172	M		O					
209-314135- 65		1	DK172	M		O					
209-314135- 67		1	DK172	M		O					
209-314135-201	48 - 19	1	DK172	M		O					
209-314135-201	48	1	DK172	M		O					
209-314135-301	48	1	DK172	M		O					
209-314136		12	BD 80	M		O					
209-314137		4	BD 81	M		O					
209-314139- 2		1	BR 12	M		O					
209-31414		1	CN 77	M		O					
209-31414- 3		2	CN 77	M		O					
209-31414- 5		2	CN 77	M		O					
209-31414- 7		2	CN 77	M		O					
209-31414- 9		2	CN 77	M		O					
209-31414- 11		2	CN 77	M		O					
209-31414-101		1	CN 77	M		O					
209-31414-201		1	CN 77	M		O					
209-314140		1	BK159	M		O					
209-314141		2	BD 82	M		O					
209-314141- 3		1	BD 82	M		O					
209-314141- 5		1	BD 82	M		O					
209-314142		12	BD 83	M		O					
209-314143- 3		2	BF274	M		O					
209-314143- 5		2	BF274	M		O					
209-314143- 7		2	BF274	M		O					
209-314143- 9		32	BF274	M		O					
209-314143- 11		24	BF274	M		O					
209-314143- 13		12	BF274	M		O					
209-314143- 15		4	BF274	M		O					
209-314143- 19		2	BF274	M		O					
209-314143- 21		2	BF274	M		O					
209-314143- 23		6	BF274	M		O					
209-314143- 25		4	BF274	M		O					
209-314143- 27		35	BF274	M		O					
209-314143- 29		4	BF274	M		O					
209-314143- 31		1	BF274	M		O					
209-314143- 33		1	BF274	M		O					
209-314143- 35		1	BF274	M		O					
209-314143- 37		1	BF274	M		O					
209-314143- 41		2	BF274	M		O					
209-314144- 1		1	BK160	M		O					
209-314144- 2		1	BK160	M		O					
209-314145- 1		1		M		O					
209-314145- 2		1		M		O					
209-314149		2	BD 84	M		O					
209-31415	48 - 50	1	DH 44	M		O					
209-31415- 3		1	DH 44	M		O					
209-31415- 5		1	DH 44	M		O					
209-31415- 7		1	DH 44	M		O					
209-31415- 9		1	DH 44	M		O					
209-31415- 11		1	DH 44	M		O					
209-31415- 13		1	DH 44	M		O					
209-31415- 15		1	DH 44	M		O					
209-31415- 17		1	DH 44	M		O					
209-31415- 19		1	DH 44	M		O					
209-31415- 21		1	DH 44	M		O					
209-31415- 23		1	DH 44	M		O					
209-31415- 25		1	DH 44	M		O					
209-31415- 27		1	DH 44	M		O					
209-31415- 29		1	DH 44	M		O					
209-31415- 31		1	DH 44	M		O					
209-31415- 33		1	DH 44	M		O					
209-31415- 35		1	DH 44	M		O					
209-31415- 41		1	DH 44	M		O					
209-31415- 43		1	DH 44	M		O					
209-31415- 45		1	DH 44	M		O					
209-31415- 46		1	DH 44	M		O					
209-31415- 47		1	DH 44	M		O					
209-31415- 49		1	DH 44	M		O					
209-31415- 51		2	DH 44	M		O					
209-31415- 52		1	DH 44	M		O					
209-31415- 53		1	DH 44	M		O					
209-31415- 55		1	DH 44								
209-31415- 57		1	DH 44	M		O					
209-31415- 63		1	DH 44	M		O					
209-31415-101	48	1	DH 44	M		O					
209-31415-201	48	1	DH 44	M		O					
209-314150- 1		1	BF275	M		O					
209-314150- 2		1	BF275	M		O					
209-314152		1	DJ272	M		O					
209-314152- 3		1	DJ272	M		O					
209-314152- 5		1	DJ272	M		O					
209-314152- 9		1	DJ272	M		O					
209-314153		4	BF276								
209-314153- 3		4	BF276								
209-31416	48 - 51	1	DN114	M		O					
209-31416- 3		1	DN114	M		O					
209-31416- 5		1	DN114	M		O					
209-31416- 7		1	DN114	M		O					
209-31416- 8		1	DN114	M		O					
209-31416- 33		1	DN114	M		O					
209-31416- 35		1	DN114	M		O					
209-31416- 37		1	DN114	M		O					
209-31416- 39		1	DN114	M		O					
209-31416- 41		1	DN114	M		O					
209-31416- 43		1	DN114	M		O					
209-31416- 44		1	DN114	M		O					
209-31416-101	48	1	DN114								
209-314163		1	BK165	M		O					
209-314165- 1		1	BK166	M		O					
209-314165- 2		1	BK166	M		O					
209-314165- 3		1	BK166	M		O					
209-314165- 4		1	BK166	M		O					
209-314165- 5		1	BK166	M		O					
209-314165- 6		1	BK166	M		O					
209-314166		1	BR 29	M		O					
209-314166- 5		1	BR 29	M		O					
209-314166- 11		1	BR 29	M		O					
209-314167- 1		1	BF277	M		O					
209-314167- 2		1	BF277	M		O					
209-314168- 1		1	BF278	M		O					
209-314168- 2		1	BF278	M		O					
209-314169- 1		1	BF279	M		O					
209-314169- 2		1	BF279	M		O					
209-314170		1	BR 19								
209-314171	44 - 58	2	BF280	P1	F	O	C		R	1560-031-4970	ANAA
209-314172	44 - 60	1	BF281	P1	F	O	C		R	1560-031-4971	ANAA
209-314173- 1		1	BK167	M		O					
209-314173- 2		1	BK167	M		O					
209-314175		1	CE 21	M		O					
209-314175- 3		1	CE 21	M		O					
209-314175- 5		1	CE 21	M		O					
209-314175- 7		1	CE 21	M		O					
209-314175- 11		1	CE 21	M		O					
209-314175- 13		1	CE 21	M		O					
209-314175- 15		1	CE 21	M		O					
209-314175- 17		1	CE 21	M		O					
209-314175- 19		1	CE 21	M		O					
209-314175- 25		1	CE 21	M		O					
209-314175- 27		1	CE 21	M		O					
209-314175- 29		1	CE 21	M		O					
209-314175- 51		1	CE 21	M		O					
209-314176- 1		1	BF282	M		O					
209-314176- 2		1	BF282	M		O					
209-314177		8	BF283	M		O					
209-314178		2	BF284	M		O					
209-314179		1	BK168	M		O					
209-314179- 3		1	BK168	M		O					
209-31418- 1		1	BR 23	M		O					
209-31418- 2		1	BR 23	M		O					
209-31418- 3		1	BR 23	M		O					
209-31418- 4		1	BR 23	M		O					
209-31418- 5		2	BR 23	M		O					
209-314180		1	BK169	M		O					
209-314180- 3		1	BK169	M		O					
209-314181- 1		5	BF285	M		O					
209-314181- 2		5	BF285	M		O					
209-314182- 1		5	BV259	M		O					
209-314182- 2		5	BV259	M		O					
209-314184		1	BK170	M		O					
209-314185- 1		1	BF286	M		O					
209-314185- 2		1	BF286	M		O					
209-314186- 1		1	BF289	M		O					
209-314186- 2		1	BF289	M		O					
209-314187		2	BF290	M		O					
209-314188- 1		1	BF291	M		O					
209-314188- 2		1	BF291	M		O					
209-314189	43 -121	1	BF356	M		O					
209-314189- 3		1	BF356	M		O					
209-314189- 11		1	BF356	M		O					
209-314189- 13		1	BF356	M		O					
209-31419- 1		1	BR 25	M		O					
209-31419- 2		1	BR 25	M		O					
209-31419- 3		1	BR 25	M		O					
209-31419- 4		1	BR 25	M		O					
209-31419- 5		2	BR 25	M		O					
209-314190		1	BK171	M		O					
209-314191		2	BK172	M		O					
209-314192- 1		2	BD 85	M		O					
209-314192- 2		2	BD 85	M		O					
209-314193		1	BF355	M		O					
209-314194- 1		1	BD 86	M		O					
209-314194- 2		1	BD 86	M		O					
209-314195- 1		1	BD 87	M		O					
209-314195- 2		1	BD 87	M		O					
209-314196		2	BD 88	M		O					

PART NUMBER	FIGURE AND INDEX	TOTAL QTY.	MICRO-FILM NUMBER	MAINTENANCE CODE DATA: SOURCE CODE	INSTL CAPABILITY	PRE-INSTL CAPABILITY	RECOVERABILITY	SUPPORT EQUIPMENT	FEDERAL STOCK NUMBER DATA: COGNIZANCE CODE	FEDERAL STOCK NUMBER	MFG. CODE (TSMC)
209-314197- 1		1	BF357	M		O					
209-314197- 2		1	BF357	M		O					
209-314198- 3		1	DD144	M		O					
209-31420	43 -112	1	CE 61	M		O					
209-31420- 3		1	CE 61	M		O					
209-31420- 7	43 -113	1	CE 61	M		O					
209-31421		1	CY 52	M		O					
209-31423		2	DO 25	M		O					
209-31425- 1		1	BF358	M		O					
209-31425- 2		1	BF358	M		O					
209-31426- 1		5	DG141	M		O					
209-31426- 2		5	DG141	M		O					
209-31427- 11		1	BR 27	M		O					
209-31427- 12		1	BR 27	M		O					
209-31430- 11		1	BR 38	M		O					
209-31430- 12		1	BR 38	M		O					
209-31431- 11		1	BR 26	M		O					
209-31431- 12		1	BR 26	M		O					
209-31432- 1		1	BR 30	M		O					
209-31432- 2		1	BR 30	M		O					
209-31432- 3		1	BR 30	M		O					
209-31432- 4		1	BR 30	M		O					
209-31432- 5		2	BR 30	M		O					
209-31432- 7		2	BR 30	M		O					
209-31433	49 - 3	1	CK114	M		O					
209-31433- 3	48 - 44	1	CK114	M		O					
209-31433- 5	48 - 42	1	CK114	M		O					
209-31433- 7		1	CK114	M		O					
209-31433- 9		1	CK114	M		O					
209-31433- 11		1	CK114	M		O					
209-31433- 13		1	CK114	M		O					
209-31433- 17		1	CK114	M		O					
209-31433- 23		1	CK114	M		O					
209-31433- 25		1	CK114	M		O					
209-31433- 27		1	CK114	M		O					
209-31433- 29		1	CK114	M		O					
209-31433- 31		1	CK114	M		O					
209-31433- 33		1	CK114	M		O					
209-31433- 35		1	CK114	M		O					
209-31433- 43		1	CK114	M		O					
209-31433- 45		1	CK114	M		O					
209-31433-101	49	1	CK114								
209-31434	49 - 4	1	DR178	M		O					
209-31434- 3	48 - 45	1	DR178	M		O					
209-31434- 5		1	DR178	M		O					
209-31434- 7		1	DR178	M		O					
209-31434- 9		1	DR178	M		O					
209-31434- 11		1	DR178	M		O					
209-31434- 13		1	DR178	M		O					
209-31434- 15		1	DR178	M		O					
209-31434- 17		1	DR178	M		O					
209-31434- 19		1	DR178	M		O					
209-31434- 21		1	DR178	M		O					
209-31434- 23		1	DR178								
209-31434- 33	48	1	DR178	M		O					
209-31434- 43		1	DR178	M		O					
209-31434- 45		1	DR178	M		O					
209-31434- 51	49	1	DR178	M		O					
209-31434- 61	49	1	DR178	M		O					
209-31437- 3		1	BR228	M		O					
209-31437- 4		1	BR228	M		O					
209-31438- 1		1	BF359	M		O					
209-31438- 2		1	BF359	M		O					
209-31441- 1		1	BR230	M		O					
209-31441- 2		1	BR230	M		O					
209-31441- 3		1	BR230	M		O					
209-31441- 4		1	BR230	M		O					
209-31441- 5		1	BR230	M		O					
209-31441- 6		1	BR230	M		O					
209-31441- 7		2	BR230	M		O					
209-31445		1	BK174	M		O					
209-31447- 1		1	DM 85	M		O					
209-31447- 2		1	DM 85	M		O					
209-31447- 3		1	DM 85	M		O					
209-31447- 4		1	DM 85	M		O					
209-31447- 5		1	DM 85	M		O					
209-31447- 6		1	DM 85	M		O					
209-31447- 7		1	DM 85	M		O					
209-31447- 8		1	DM 85	M		O					
209-31447- 9		1	DM 85	M		O					
209-31447- 10		1	DM 85	M		O					
209-31447- 11		1	DM 85	M		O					
209-31447- 12		1	DM 85	M		O					
209-31447- 13		1	DM 85	M		O					
209-31447- 14		1	DM 85	M		O					
209-31447- 15		1	DM 85	M		O					
209-31447- 16		1	DM 85	M		O					
209-31447- 17		1	DM 85	M		O					
209-31447- 18		1	DM 85	M		O					
209-31447- 19		1	DM 85	M		O					
209-31447- 20		1	DM 85	M		O					
209-31447- 51		1	DM 85	M		O					
209-31447- 52		1	DM 85	M		O					
209-31450- 3	48 113	1	BR208	X1							
209-31450- 5	48 - 46 113 - 23	2	BR208	X2							
209-31451		1	BR239	M		O					
209-31452		1	BR236	M		O					
209-31452- 3		1	BR236	M		O					
209-31452- 5		1	BR236	M		O					
209-31452- 6		1	BR236	M		O					
209-31452- 11		1	BR236	M		O					
209-31452- 12		1	BR236	M		O					
209-31453		1	BR 41	M		O					
209-31453- 3		1	BR 41	M		O					
209-31453- 5		1	BR 41	M		O					
209-31454		1	DK176	M		O					
209-31454- 3		1	DK176	M		O					
209-31454- 5		1	DK176	M		O					
209-31454- 6		1	DK176	M		O					
209-31454- 11		1	DK176	M		O					
209-31454- 13		1	DK176	M		O					
209-31454- 17		1	DK176	M		O					
209-31454- 19		1	DK176	M		O					
209-31455		1	BR226	M		O					
209-31455- 9		1	BR226	M		O					
209-31455- 11		1	BR226	M		O					
209-31455- 12		1	BR226	M		O					
209-31455- 13		1	BR226	M		O					
209-31455- 15		1	BR226	M		O					
209-31455- 17		1	BR226	M		O					
209-31456		2	DN 66	M		O					
209-31456- 3		1	DN 66	M		O					
209-31457		1	DN 80	M		O					
209-31457- 3		1	DN 80	M		O					
209-31460		1	BR234	M		O					
209-31460- 3		1	BR234	M		O					
209-31460- 5		1	BR234	M		O					
209-31460- 6		1	BR234	M		O					
209-31460- 7		1	BR234	M		O					
209-31463		1	BK175	M		O					
209-31465		1	BR214	M		O					
209-31465- 3		1	BR214	M		O					
209-31465- 5		1	BR214	M		O					
209-31465- 6		1	BR214	M		O					
209-31465- 7		1	BR214	M		O					
209-31468		1	BR218	M		O					
209-31472		1	BR227	M		O					
209-31472- 3		1	BR227	M		O					
209-31472- 6		1	BR227	M		O					
209-31472- 7		1	BR227	M		O					
209-31472- 9		1	BR227	M		O					
209-31472- 10		1	BR227	M		O					
209-31472- 11		1	BR227	M		O					
209-31472- 15		1	BR227	M		O					
209-31472- 16		1	BR227	M		O					
209-31472- 17		1	BR227	M		O					
209-31472- 18		1	BR227	M		O					
209-31472- 19		1	BR227	M		O					
209-31473		1	BR235	M		O					
209-31473- 3		1	BR235	M		O					
209-31473- 5		1	BR235	M		O					
209-31475		1	BX 11	M		O					
209-31475- 3		1	BX 11	M		O					
209-31475- 5		1	BX 11	M		O					
209-31475- 7		1	BX 11	M		O					
209-31475- 9		1	BX 11	M		O					
209-31475- 11		1	BX 11	M		O					
209-31475- 13		1	BX 11	M		O					
209-31475- 15		1	BX 11	M		O					
209-31475- 17		1	BX 11	M		O					
209-31475- 19		1	BX 11	M		O					
209-31475- 21		1	BX 11	M		O					
209-31475- 23		1	BX 11	M		O					
209-31475- 25		1	BX 11	M		O					
209-31475- 29		1	BX 11	M		O					
209-31475- 31		1	BX 11	M		O					
209-31475- 33		1	BX 11	M		O					
209-31475- 35		1	BX 11	M		O					
209-31475-101		1	BX 11								
209-31475-201		1	BX 11	M		O					
209-31476		1	BJ110	M		O					
209-31476- 3		1	BJ110								
209-31476- 7		1	BJ110	M		O					
209-31476- 9		1	BJ110	M		O					
209-31476- 11		1	BJ110	M		O					
209-31476- 13		1	BJ110	M		O					
209-31476- 21		1	BJ110	M		O					
209-31476- 23		1	BJ110	M		O					
209-31476- 25		1	BJ110	M		O					
209-31476- 27		1	BJ110	M		O					
209-31476- 29		1	BJ110	M		O					
209-31476- 31		1	BJ110	M		O					
209-31480		1	DE115	M		O					
209-31480- 3		1	DE115	M		O					
209-31481- 1		1	BR209	M		O					
209-31481- 2		1	BR209	M		O					
209-31481- 3		2	BR209	M		O					
209-31481- 5		2	BR209	M		O					
209-31481- 7		2	BR209	M		O					
209-31482		1	BK176	M		O					
209-31482- 3		1	BK176	M		O					
209-31482- 5		1	BK176	M		O					
209-31482- 7		1	BK176	M		O					
209-31482- 9		1	BK176	M		O					
209-31482- 11		1	BK176	M		O					
209-31482- 13		1	BK176	M		O					
209-31483		1	BR225	M		O					
209-31483- 5		1	BR225	M		O					
209-31483- 9		1	BR225	M		O					
209-31483- 11		1	BR225	M		O					
209-31483- 13		1	BR225	M		O					
209-31483- 15		1	BR225	M		O					
209-31483- 17		1	BR225	M		O					
209-31483- 19		1	BR225	M		O					
209-31483- 21		1	BR225	M		O					
209-31483- 51		1	BR225	M		O					
209-31488- 1		1	BR204	M		O					
209-31488- 2		1	BR204	M		O					

PART NUMBER	FIGURE AND INDEX	TOTAL QTY.	MICRO-FILM NUMBER	MAINTENANCE CODE DATA: SOURCE CODE	INSTL CAPABILITY	PRE-INSTL CAPABILITY	RECOVERABILITY	SUPPORT EQUIPMENT	FEDERAL STOCK NUMBER DATA: COGNIZANCE CODE	FEDERAL STOCK NUMBER	MFG. CODE (TSMC)
209-31488- 3		1	BR204	M		0					
209-31488- 4		1	BR204	M		0					
209-31488- 5		1	BR204	M		0					
209-31488- 6		1	BR204	M		0					
209-31488- 7		1	BR204	M		0					
209-31488- 8		1	BR204	M		0					
209-31488- 9		1	BR204	M		0					
209-31488- 10		1	BR204	M		0					
209-31490- 1		1	BR190	M		0					
209-31490- 2		1	BR190	M		0					
209-31491- 1		1	BR199	M		0					
209-31491- 2		1	BR199	M		0					
209-31494		1	DK200	M		0					
209-31494- 3		1	DK200								
209-31494- 5		1	DK200	M		0					
209-31494- 7		1	DK200	M		0					
209-31494- 9		1	DK200	M		0					
209-31494- 11		1	DK200	M		0					
209-31494- 13		1	DK200	M		0					
209-31494- 15		1	DK200	M		0					
209-31494-101		1	DK200	M		0					
209-31496		1	BN206	M		0					
209-31496- 3		1	BN206	M		0					
209-31497- 1		1	BR232	M		0					
209-31497- 2		1	BR232	M		0					
209-31497- 3		1	BR232	M		0					
209-31497- 4		1	BR232	M		0					
209-31498		1	BR191	M		0					
209-31498- 3		1	BR191	M		0					
209-31501	44 - 94	1	BR220	P1	F	0	C		R	1560-031-4972	ANAA
209-31501- 3		1	BR220	M		0					
209-31501- 5		1	BR220	M		0					
209-31501- 7		1	BR220	M		0					
209-31501- 9		1	BR220	M		0					
209-31501- 11		1	BR220	M		0					
209-31501- 17		1	BR220	M		0					
209-31501- 19	44 - 97	1	BR220	M		0					
209-31501- 21		1	BR220	M		0					
209-31501- 23	44 - 96	1	BR220	M		0					
209-31501- 24	44 - 95	1	BR220	M		0					
209-31501- 25		1	BR220	M		0					
209-31501- 27		1	BR220	M		0					
209-31502		1	DK198								
209-31502- 3		1	DK198								
209-31502- 5		1	DK198								
209-31507- 1		1	BX199	M		0					
209-31507- 2		1	BX199	M		0					
209-31509- 3		1	BW 94	X1							
209-31509- 4		1	BW 94	X1							
209-31509- 11	49 - 13	1	BW 94	X2							
209-31509- 12	49	1	BW 94	X2							
209-31510- 1		1		M		0					
209-31510- 2		1		M		0					
209-31510- 5		1									
209-31510- 7		1									
209-31510- 9		1		M		0					
209-31510- 11		1		M		0					
209-31510- 12		1		M		0					
209-31510- 13		1		M		0					
209-315101- 1		2	BD 89	M		0					
209-315101- 2		2	BD 89	M		0					
209-315102- 1		1	BK178	M		0					
209-315102- 2		1	BK178	M		0					
209-315104- 3	47 - 62	1	BR219	X2							
209-315104- 4	47	1	BR219	X2							
209-315105	48 - 36	2	BF365	M		0					
209-315106	44 - 72	2	DK137	P	F	0	C		R	1560-031-4973	ANAA
209-315107- 1	47 - 59	1	CA122	M		0					
209-315107- 2	47	1	CA122	M		0					
209-315107- 7		2	CA122	M		0					
209-315107- 9		1	CA122	M		0					
209-315107- 11		1	CA122	M		0					
209-315107- 12		1	CA122	M		0					
209-315107- 13		1	CA122	M		0					
209-315107- 14		1	CA122	M		0					
209-315107- 15		1	CA122	M		0					
209-315107- 16		1	CA122	M		0					
209-315107- 17		1	CA122	M		0					
209-315107- 18		1	CA122	M		0					
209-315107- 19		2	CA122	M		0					
209-315107- 21		2	CA122	M		0					
209-315107- 23		1	CA122	M		0					
209-315107- 51	47	1	CA122	M		0					
209-315107- 52	47	1	CA122	M		0					
209-315109- 1		1	BF365	M		0					
209-315109- 2		1	BF365	M		0					
209-315109- 12		1	BF365								
209-31511		1	DG283	A		0					
209-31511- 3		1	DG283	M		0					
209-31511- 5		1	DG283	M		0					
209-31511- 7		1	DG283								
209-31511- 8		1	DG283								
209-31511- 9		1	DG283								
209-31511- 10		1	DG283								
209-31511- 11		1	DG283	M		0					
209-31511- 12		1	DG283	M		0					
209-31511- 13		1	DG283	M		0					
209-31511- 14		1	DG283	M		0					
209-31511- 15		1	DG283	M		0					
209-31511- 17		1	DG283	M		0					
209-31511- 19		1	DG283	M		0					
209-31511- 21		1	DG283	M		0					
209-31511- 23		1	DG283								
209-31511- 24		1	DG283								
209-31511- 25		1	DG283								

PART NUMBER	FIGURE AND INDEX	TOTAL QTY.	MICRO-FILM NUMBER	MAINTENANCE CODE DATA: SOURCE CODE	INSTL CAPABILITY	PRE-INSTL CAPABILITY	RECOVERABILITY	SUPPORT EQUIPMENT	FEDERAL STOCK NUMBER DATA: COGNIZANCE CODE	FEDERAL STOCK NUMBER	MFG. CODE (TSMC)
209-31511- 26		1	DG283								
209-31511- 27		1	DG283	M		0					
209-31511- 28		1	DG283	M		0					
209-31511- 29		1	DG283	M		0					
209-31511- 31		1	DG283	M		0					
209-31511- 33		1	DG283	M		0					
209-31511- 35		2	DG283	M		0					
209-31511- 37		1	DG283	M		0					
209-31511- 39		1	DG283	M		0					
209-31511- 41		1	DG283	M		0					
209-31511- 43		1	DG283	M		0					
209-31511- 45		1	DG283	M		0					
209-31511- 61		1	DG283	M		0					
209-31511- 63		1	DG283	M		0					
209-31511- 65		1	DG283	M		0					
209-31511-101		1	DG283	A		0					
209-31511-151		1	DG283	A		0					
209-31511-161		1	DG283	A		0					
209-31511-171		1	DG283	A		0					
209-31511-181		1	DG283	A		0					
209-315110- 1		1	BS149	M		0					
209-315110- 2		1	BS149	M		0					
209-315111		2	BF367	M		0					
209-315112		1	DB153	M		0					
209-315112- 3		1	DB153	M		0					
209-315113- 1		1	DJ249	M		0					
209-315113- 2		1	DJ249	M		0					
209-315114- 1	49 - 11	1	BR237	M		0					
209-315114- 2	49	1	BR237	M		0					
209-315114- 3		1	BR237	M		0					
209-315114- 4		1	BR237	M		0					
209-315114- 5		1	BR237	M		0					
209-315114- 6		1	BR237	M		0					
209-315114- 7		1	BR237	M		0					
209-315114- 8		1	BR237	M		0					
209-315114- 9		1	BR237	M		0					
209-315114- 10		1	BR237	M		0					
209-315114- 11		1	BR237	M		0					
209-315114- 12		1	BR237	M		0					
209-315114- 13		2	BR237	M		0					
209-315115	47 - 13	2	CU 81	M		0					
209-315116		1	BF369	M		0					
209-315117- 1		1	BF370	M		0					
209-315117- 2		1	BF370	M		0					
209-315118		1	DH278	M		0					
209-315119		1	BX181	M		0					
209-31512- 1		1	BS179	M		0					
209-31512- 2		1	BS179	M		0					
209-31512- 3		1	BS179	M		0					
209-31512- 6		1	BS179	M		0					
209-315120	44 -112	1	BK182	M		0					
209-315121	44 -109	1	BY 29	M		0					
209-315121- 3	44 -111	1	BY 29	M		0					
209-315124- 1		1	BK184	M		0					
209-315124- 2		1	BK184	M		0					
209-315128		3	BD 90	M		0					
209-315129		1	BK185	M		0					
209-31513- 1		1	DG229	M		0					
209-31513- 2		1	DG229	M		0					
209-31513- 12		1	DG229	M		0					
209-315130		1	DH279	M		0					
209-315131- 1		1	BF371	M		0					
209-315131- 2		1	BF371	M		0					
209-315132		1	BS146	M		0					
209-315133		1	BR192	M		0					
209-315134	48 - 60	1		M		0					
209-315135- 1		1	BK188	M		0					
209-315135- 2		1	BK188	M		0					
209-315135- 3		1	BK188	M		0					
209-315135- 4		1	BK188	M		0					
209-315135- 5		1	BK188	M		0					
209-315135- 11		1	BK188	M		0					
209-315135- 12		1	BK188	M		0					
209-315136- 1		1	BF472	M		0					
209-315136- 2		1	BF472	M		0					
209-315136- 3		1	BF472	M		0					
209-315136- 4		1	BF472	M		0					
209-315139		1	BR229	U							
209-315140	48 - 52	1	BF374	M		0					
209-315141	47 - 64	1	BK192	M		0					
209-315142	48 - 58	2	BX189	M		0					
209-315143	48 - 65	2	CL344	M		0					
209-315144	48 - 59	2	BF375	M		0					
209-315145	48 - 64	2	BF236	M		0					
209-315146	48 - 54	1	BF376	M		0					
209-315147		1	BF377	M		0					
209-315150	47 - 29	2	BF378	M		0					
209-315150- 3		2	BF378	M		0					
209-315150- 5		2	BF378	M		0					
209-315150- 7		2	BF378	M		0					
209-315151- 1		1	BK191	M		0					
209-315151- 2		1	BK191	M		0					
209-315152- 1		1	BF437	M		0					
209-315152- 2		1	BF437	M		0					
209-315160		1	BR193	U							
209-315161		1	BR 82	M		0					
209-315162		1	CA193	M		0					
209-315162- 11		1	CA193	M		0					
209-315163	23 - 5	1	BR224	M		0					
209-315163- 3		1	BR224	M		0					
209-315163- 5		1	BR224	M		0					
209-315164	44 - 51	2	BY 78	P1	F	0	C		R	1560-031-4974	ANAA
209-315165	44 - 50	2	BF438	P1	F	0	C		R	1560-031-4975	ANAA
209-315166	44 - 81	2	BK193	M		0					
209-315166- 5		4	BK193	M		0					

PART NUMBER	FIGURE AND INDEX	TOTAL QTY.	MICRO-FILM NUMBER	MAINTENANCE CODE DATA: SOURCE CODE	INST'L CAPABILITY	PRE-INST'L CAPABILITY	RECOVERABILITY	SUPPORT EQUIPMENT	FEDERAL STOCK NUMBER DATA: COGNIZANCE CODE	FEDERAL STOCK NUMBER	MFG. CODE (TSMC)
209-315168- 1		1	BK194	M		O					
209-315168- 2		1	BK194	M		O					
209-315168- 11		1	BK194	M		O					
209-315169		1	BR198	M		O					
209-315169- 7		1	BR198	M		O					
209-315169-101		1	BR198	M		O					
209-31517- 1	49 - 5	1	BR205	M		O					
209-31517- 2	49 - 6	1	BR205	M		O					
209-31517- 3		1	BR205	M		O					
209-31517- 4		1	BR205	M		O					
209-31517- 5		2	BR205	M		O					
209-31517- 7		2	BR205	M		O					
209-31517- 9		2	BR205	M		O					
209-31517- 11		2	BR205	M		O					
209-315170		1	DJ 65	M		O					
209-315170- 11		1	DJ 65	M		O					
209-315170- 21		1	DJ 65	M		O					
209-315171- 1		1	BT209	M		O					
209-315171- 2		1	BT209	M		O					
209-315171- 3		1	BT209	M		O					
209-315171- 4		1	BT209	M		O					
209-315171- 5		2	BT209	M		O					
209-315172		1	BK196	M		O					
209-315172- 3		1	BK196	M		O					
209-315172- 5		1	BK196	M		O					
209-315173		1	CE 42	M		O					
209-315173- 3		1	CE 42	M		O					
209-315173- 5		1	CE 42	M		O					
209-315174- 1		1	BS147	M		O					
209-315174- 2		1	BS147	M		O					
209-315175- 1		1	BS148	M		O					
209-315175- 2		1	BS148	M		O					
209-31518	113 - 33	1	BR196	A		O					
209-31518- 3		1	BR196	M		O					
209-31518- 5		1	BR196	M		O					
209-31518- 7		1	BR196	M		O					
209-31518- 9		1	BR196	M		O					
209-31518- 11		1	BR196	M		O					
209-31518- 13		1	BR196	M		O					
209-31518- 15		1	BR196	M		O					
209-31518- 21		1	BR196	A		O					
209-31518- 27		1	BR198	A		O					
209-31518- 23		1	BR196	M		O					
209-31518- 25		1	BR196	M		O					
209-31518- 27		1	BR196	M		O					
209-31518- 29		1	BR196	M		O					
209-31518- 31		1	BR196	M		O					
209-31518- 33		1	BR196	M		O					
209-31518- 35		1	BR196	M		O					
209-31518- 37		1	BR196	M		O					
209-31518- 39		2	BR196	M		O					
209-31518- 51		1	BR196	A		O					
209-31518- 53		1	BR196	M		O					
209-31518-101	113 - 33	1	BR196	A		O					
209-31518-151	113	1	BR196	A		O					
209-315180- 3		1	BR233	X1							
209-315180- 11	113	1	BR233	P1	O	O	S		R	1560-031-4976	ANAA
209-315183	47 - 23	2	CV 12	M		O					
209-315184	44 - 45	2	BF383	M		O					
209-315184- 3		2	BF383	M		O					
209-315185	47 - 68	2	CV 36	M		O					
209-315186	47 - 20	2	CV 14	M		O					
209-315187	44 - 47	2	BF384	M		O					
209-315188- 1	47 - 25	1	CV 38	M		O					
209-315188- 2	47	1	CV 38	M		O					
209-315188- 3		1	CV 38	M		O					
209-315188- 4		1	CV 38	M		O					
209-315189- 1		2	BF385	M		O					
209-315189- 2		2	BF385	M		O					
209-31519- 1		1	BF386	M		O					
209-31519- 2		1	BF386	M		O					
209-315190- 1	47 - 2	1	DK182	A		O					
209-315190- 2	47	1	DK182	A		O					
209-315191	47 - 17	4	CV 10	M		O					
209-315192	47 - 16	2	DP 40	M		O					
209-315193	47 - 18	2	DE157	M		O					
209-315194	47 - 6	2	CV 37	M		O					
209-315195	47 - 19	4	CV 13	M		O					
209-315196- 1	47 - 22	1	CV 60	P1	F	O	S		R	1560-569-1616	ANAA
209-315196- 2	47	1	CV 60	P1	F	O	S		R	1560-569-1747	ANAA
209-315197- 5		2	DS 91	M		O					
209-315197- 7		2	DS 91	M		O					
209-315197- 11		2	DS 91	M		O					
209-315198		1	BK197	M		O					
209-315198- 3		1	BK197	M		O					
209-315198- 5		1	BK197	M		O					
209-315198- 7		1	BK197	M		O					
209-315199		1	DP 73	M		O					
209-315199- 3		1	DP 73	M		O					
209-315199- 5		1	DP 73	M		O					
209-31522- 1		1	DH290	M		O					
209-31522- 2		1	DH290	M		O					
209-31524		1	DR208								
209-31525	48	1	BR212	M		O					
209-31525- 7		1	BR212	M		O					
209-31525- 9		1	BR212	M		O					
209-31525- 10		1	BR212	M		O					
209-31525- 11		1	BR212	M		O					
209-31525- 13	48 - 39	1	BR212	M		O					
209-31526	48	1	BU163	M		O					
209-31526- 3		1	BU163	M		O					
209-31526- 5		1	BU163	M		O					
209-31526- 7		1	BU163	M		O					
209-31526- 9		1	BU163	M		O					
209-31526- 11	48	1	BU163	M		O					
209-31526- 13		1	BU163	M		O					
209-31527		1	DK 42								
209-31527- 3		1	DK 42								
209-31527- 5		1	DK 42								
209-31527- 7		1	DK 42								
209-31527- 9		1	DK 42	M		O					
209-31527- 11		1	DK 42	M		O					
209-31527- 13		1	DK 42	M		O					
209-31527- 15		1	BR213	M		O					
209-31528	44 -113	1	BF391	M		O					
209-31528- 3		1	BF391	M		O					
209-31528- 5		1	BF391	M		O					
209-31529- 1		1	BV239	M		O					
209-31529- 2		1	BV239	M		O					
209-31530		1	DO 79	M		O					
209-31530- 3		1	DO 79	M		O					
209-31530- 5		1	DO 79	M		O					
209-31531- 3	69 - 32	1	BR207	P1	F	O	S		R	1560-031-4977	ANAA
209-31531- 13	69 - 32 113 - 14	1	BR207	P1	F	O	S		R	1560-694-8009	ANAA
209-31532- 3	49 - 12	1	BR211	X2							
209-31532- 4	49	1	BR211	X2							
209-31533- 1		1	BK201	M		O					
209-31533- 2		1	BK201	M		O					
209-31533- 17		1	BK201	M		O					
209-31534	44 -110	2	BY 77	M		O					
209-31536- 1		1	BR210	M		O					
209-31536- 2		1	BR210	M		O					
209-31537	47 - 61	1	BY247	M		O					
209-31537- 3		1	BY247	M		O					
209-31537- 4		1	BY247	M		O					
209-31537- 5		1	BY247	M		O					
209-31537- 7		1	BY247	M		O					
209-31537- 9		2	BY247	M		O					
209-31537- 11		2	BY247	M		O					
209-31537- 13		1	BY247	M		O					
209-31537- 15		1	BY247	M		O					
209-31537- 17		1	BY247	M		O					
209-31537- 19		1	BY247	M		O					
209-31537- 21		1	BY247	M		O					
209-31537- 23		1	BY247	M		O					
209-31537- 25		1	BY247	M		O					
209-31537- 26		1	BY247	M		O					
209-31537- 27		1	BY247	M		O					
209-31537- 28		1	BY247	M		O					
209-31537- 29		1	BY247	M		O					
209-31537- 31		1	BY247	M		O					
209-31537- 33		1	BY247	M		O					
209-31537- 34		1	BY247	M		O					
209-31537- 35		1	BY247	M		O					
209-31537- 36		1	BY247	M		O					
209-31537- 37		1	BY247	M		O					
209-31537- 38		1	BY247	M		O					
209-31537- 39		1	BY247								
209-31537- 40		1	BY247								
209-31537- 41		1	BY247	M		O					
209-31537- 42		1	BY247	M		O					
209-31537- 43		1	BY247								
209-31537- 45		1	BY247	M		O					
209-31537- 46		1	BY247	M		O					
209-31537- 47		1	BY247	M		O					
209-31537- 48		1	BY247	M		O					
209-31537- 49		2	BY247	M		O					
209-31537- 51		2	BY247	M		O					
209-31537- 53	47 - 63	1	BY247	M		O					
209-31537- 57		1	BY247	M		O					
209-31537- 58		1	BY247	M		O					
209-31537- 59		1	BY247	M		O					
209-31537- 60		1	BY247	M		O					
209-31537- 61		1	BY247	M		O					
209-31537- 63		2	BY247	M		O					
209-31537- 65		1	BY247	M		O					
209-31537- 66		1	BY247								
209-31537- 67		1	BY247	M		O					
209-31537- 69		1	BY247	M		O					
209-31537- 71		1	BY247	M		O					
209-31537-101	47	1	BY247	M		O					
209-31537-151	47	1	BY247	M		O					
209-31537-173		1	BY247	M		O					
209-31537-174		1	BY247	M		O					
209-31537-201	47	1	BY247	M		O					
209-31539		2	BK202								
209-31539- 3	31 - 6 48 - 37	4	BK202	P1	F	O	C		R	1560-031-4978	ANAA
209-31540- 1		1	DP 47	M		O					
209-31540- 2		1	DP 47	M		O					
209-31540- 5		1	DP 47	M		O					
209-31540- 6		1	DP 47	M		O					
209-31540- 9		1	DP 47	M		O					
209-31540- 11		2	DP 47	M		O					
209-31540- 12		1	DP 47	M		O					
209-31540- 13		1	DP 47								
209-31540- 15		1	DP 47	M		O					
209-31540- 17		1	DP 47	M		O					
209-31540- 19		1	DP 47	M		O					
209-31540- 20		1	DP 47	M		O					
209-31540- 21		1	DP 47	M		O					
209-31540- 22		1	DP 47	M		O					
209-31540- 31		1	DP 47	M		O					
209-31540- 32		1	DP 47	M		O					
209-31542- 1		1	BR238	M		O					
209-31542- 2		1	BR238	M		O					
209-31542- 3		1	BR238	M		O					
209-31542- 4		1	BR238	M		O					
209-31542- 5		1	BR238	M		O					

PART NUMBER	FIGURE AND INDEX	TOTAL QTY.	MICRO-FILM NUMBER	MAINTENANCE CODE DATA: SOURCE CODE	INSTL CAPABILITY	PRI-INSTL CAPABILITY	RECOVERABILITY	SUPPORT EQUIPMENT	FEDERAL STOCK NUMBER DATA: COGNIZANCE CODE	FEDERAL STOCK NUMBER	MFG. CODE (TSMC)
209-31542- 6		1	BR238	M		0					
209-31542- 7		2	BR238	M		0					
209-31542- 9		2	BR238	M		0					
209-31543- 3	31 - 7	4	BR 71	P1	F	0	S		R	1560-031-4979	ANAA
209-31544	47 - 9	2	BF396	M		0					
209-31545		2	BV260	M		0					
209-31546	47 - 72	4	CP161	M		0					
209-31548	31 - 8	4	BF388	P1	F	0	S		R	5310-031-4980	ANAA
209-31550	48 - 98	1	BN 64	M		0					
209-31550- 3	48	1	BN 64	M		0					
209-31550- 5		2	BN 64	M		0					
209-31551- 1		1	BR188	M		0					
209-31551- 2		1	BR188	M		0					
209-31551- 12		1	BR188	M		0					
209-31552- 1		1	BF389	M		0					
209-31552- 2		1	BF389	M		0					
209-31553- 1		1	BF398	M		0					
209-31553- 2		1	BF398	M		0					
209-31555- 1		1	DJ246	M		0					
209-31555- 2		1	DJ246	M		0					
209-31556- 1		1	DN 89	M		0					
209-31556- 2		1	DN 89	M		0					
209-31556- 3		1	DN 89	M		0					
209-31556- 4		1	DN 89	M		0					
209-31556- 5		1	DN 89	M		0					
209-31556- 6		1	DN 89	M		0					
209-31556- 7		1	DN 89	M		0					
209-31556- 8		1	DN 89	M		0					
209-31556- 9		1	DN 89	M		0					
209-31556- 11		1	DN 89	M		0					
209-31557	48 - 43	1	BR231	P1	0	0	C		R	1560-031-4981	ANAA
209-31557- 3		1	BR231	X1							
209-31557- 5		1	BR231	X1							
209-31557- 7		1	BR231	X1							
209-31557- 9		1	BR231	X1							
209-31557- 11		1	BR231	X1							
209-31558- 1		1	BK204	M		0					
209-31558- 2		1	BK204	M		0					
209-31558- 4		1	BK204	M		0					
209-31558- 5		1	BK204	M		0					
209-31558- 6		1	BK204	M		0					
209-31558- 11		1	BK204	M		0					
209-31558- 12		1	BK204	M		0					
209-31559- 1		1	BF400	M		0					
209-31559- 2		1	BF400	M		0					
209-31560- 1		1	BR216	M		0					
209-31560- 2		1	BR216	M		0					
209-31560- 3		1	BR216	M		0					
209-31560- 4		1	BR216	M		0					
209-31560- 5		1	BR216	M		0					
209-31560- 6		1	BR216	M		0					
209-31560- 7		2	BR216	M		0					
209-31561	48 - 6	1	BX 63	M		0					
209-31561- 3	48	1	BX 63	M		0					
209-31561- 5		1	BX 63	M		0					
209-31561- 6		1	BX 63	M		0					
209-31562- 3	44 -115	1	BF401	M		0					
209-31562- 5	44 -116	1	BF401	M		0					
209-31562- 7		1	BF401	M		0					
209-31562- 9	44 -117	1	BF401	M		0					
	44 -118										
209-31563	44 -102	4	DJ247	P1	F	0	C		R	1560-694-8010	ANAA
209-31564- 1		1	BF403	M		0					
209-31564- 2		1	BF403	M		0					
209-31565- 1		2	DH277	M		0					
209-31565- 3		2	DH277	M		0					
209-31567- 1		1	BR189	M		0					
209-31567- 2		1	BR189	M		0					
209-31568		2	BF404	M		0					
209-31569- 1		1	BS 28	M		0					
209-31569- 2		1	BS 28	M		0					
209-31569- 3		1	BS 28	M		0					
209-31569- 6		1	BS 28	M		0					
209-31570	44 -100	1	CE 5	P1	F	0	S		R	1560-338-1011	ANAA
209-31570- 3		1	CE 5	M		0					
209-31570- 5		1	CE 5	M		0					
209-31570- 7		1	CE 5	M		0					
209-31570- 9		1	CE 5	M		0					
209-31570- 11		1	CE 5	M		0					
209-31570- 13		1	CE 5	M		0					
209-31570- 15		1	CE 5	M		0					
209-31570- 17		1	CE 5	M		0					
209-31570- 19		1	CE 5	M		0					
209-31570- 21		1	CE 5	M		0					
209-31570- 23		1	CE 5	M		0					
209-31570- 25		1	CE 5	M		0					
209-31570- 27		1	CE 5	M		0					
209-31570- 29		1	CE 5	M		0					
209-31570- 31		1	CE 5	M		0					
209-31570- 33		1	CE 5	M		0					
209-31570- 35		2	CE 5	M		0					
209-31570- 37		1	CE 5	M		0					
209-31571	31 - 4	4	BF405	M		0					
209-31572- 1		1	DN107	M		0					
209-31572- 2		1	DN107	M		0					
209-31572- 3		1	DN107	M		0					
209-31572- 4		1	DN107	M		0					
209-31572- 5		1	DN107	M		0					
209-31572- 6		1	DN107	M		0					
209-31572- 9		1	DN107	M		0					
209-31572- 10		1	DN107	M		0					
209-31572- 11		1	DN107	M		0					
209-31572- 13		2	DN107	M		0					
209-31572- 15		1	DN107	M		0					
209-31572- 16		1	DN107	M		0					

PART NUMBER	FIGURE AND INDEX	TOTAL QTY.	MICRO-FILM NUMBER	MAINTENANCE CODE DATA: SOURCE CODE	INSTL CAPABILITY	PRI-INSTL CAPABILITY	RECOVERABILITY	SUPPORT EQUIPMENT	FEDERAL STOCK NUMBER DATA: COGNIZANCE CODE	FEDERAL STOCK NUMBER	MFG. CODE (TSMC)
209-31573- 3	49 - 9	1	BS 14	X2							
209-31573- 4	49 - 10	1	BS 14	X2							
209-31574- 1		1	BK163	M		0					
209-31574- 2		1	BK163	M		0					
209-31574- 11		1	BK163	M		0					
209-31575- 1		1	DK136	M		0					
209-31575- 2		1	DK136	M		0					
209-31576		1	BK164	M		0					
209-31576- 3		1	BK164	M		0					
209-31577- 1		1	DJ206	M		0					
209-31577- 2		1	DJ206	M		0					
209-31577- 3		1	DJ206	M		0					
209-31577- 4		1	DJ206	M		0					
209-31578		1	BS 44	M		0					
209-31579- 1		1	BR177	M		0					
209-31579- 2		1	BR177								
209-31579- 11		1	BR177	M		0					
209-31579- 12		1	BR177	M		0					
209-31580- 3		1	BS 37	X1							
209-31580- 4		1	BS 37	X1							
209-31580- 5	49 - 15	1	BS 37	X2							
209-31580- 6	49	1	BS 37	X2							
209-31581- 1		4	BD 92	M		0					
209-31581- 3		4	BD 92	M		0					
209-31584		1	DP133								
209-31584- 3	44	1									
209-31584- 5	44	1									
209-31584- 7		1	DP133								
209-31584- 9	44	1									
209-31585- 1		1	BS217	M		0					
209-31585- 2		1	BS217	M		0					
209-31585- 3		1	BS217	M		0					
209-31585- 4		1	BS217	M		0					
209-31585- 5		1	BS217	M		0					
209-31585- 6		1	BS217	M		0					
209-31585- 7		1	BS217	M		0					
209-31585- 8		1	BS217	M		0					
209-31585- 9		1	BS217	M		0					
209-31585- 10		1	BS217	M		0					
209-31585- 11		1	BS217	M		0					
209-31585- 12		1	BS217	M		0					
209-31585- 13		2	BS217	M		0					
209-31585- 15		1	BS217	M		0					
209-31585- 17		1	BS217	M		0					
209-31585- 32		1	BS217	M		0					
209-31585-101		1	BS217	M		0					
209-31586- 1		1	BS 19	M		0					
209-31586- 2		1	BS 19	M		0					
209-31586- 3		1	BS 19	M		0					
209-31586- 4		1	BS 19	M		0					
209-31586- 7	48 - 41	2	BS 19	M		0					
209-31586- 15		1	BS 19	M		0					
209-31586- 16		1	BS 19	M		0					
209-31587		1	BS180	M		0					
209-31587- 5		1	BS180	M		0					
209-31587- 7		1	BS180	M		0					
209-31587- 9		1	BS180	M		0					
209-31587- 11		1	BS180	M		0					
209-31588		1	BS181	M		0					
209-31588- 3		1	BS181	M		0					
209-31588- 5		1	BS181	M		0					
209-31588- 7		1	BS181	M		0					
209-31588- 9		1	BS181	M		0					
209-31588- 11		1	BS181	M		0					
209-31589- 1		1	BF407	M		0					
209-31589- 2		1	BF407	M		0					
209-31590		1	BS 26	U							
209-31591- 1		1	DJ248	M		0					
209-31591- 2		1	DJ248	M		0					
209-31592- 1		1	BS149	M		0					
209-31592- 2		1	BS149	M		0					
209-31594- 1	44 - 78	1	DK201	M		0					
209-31594- 2	44	1	DK201	P1	F	0	R		R	1560-614-1730	ANAA
209-31594- 3		2	DK201	M		0					
209-31594- 4		1	DK201	M		0					
209-31596- 1		1	BX174	M		0					
209-31596- 2		1	BX174	M		0					
209-31596- 3		1	BX174								
209-31596- 4		1	BX174								
209-31596- 5		1	BX174	M		0					
209-31596- 6		1	BX174	M		0					
209-31596- 7		1	BX174								
209-31596- 8		1	BX174								
209-31596- 9		2	BX174	M		0					
209-31596- 11		1	BX174								
209-31596- 13		2	BX174	M		0					
209-31596- 15		1	BX174	M		0					
209-31596- 17		1	BX174								
209-31596- 19		1	BX174	M		0					
209-31596- 21		1	BX174	M		0					
209-31596- 22		1	BX174	M		0					
209-31596- 23		1	BX174	M		0					
209-31596- 24		1	BX174	M		0					
209-31596- 25		1	BX174	M		0					
209-31597- 1		1	CA282	M		0					
209-31597- 3		1	CA282	M		0					
209-31597- 5		1	CA282	M		0					
209-31597- 7		1	CA282	M		0					
209-31598- 3		1	DR186	M		0					
209-31598- 4		1	DR186	M		0					
209-31599		1	DK203	M		0					
209-31599- 3		1	DK203	M		0					
209-31599- 5		1	DK203	M		0					
209-31599- 6		1	DK203	M		0					
209-31599- 7		1	DK203	M		0					

PART NUMBER	FIGURE AND INDEX	TOTAL QTY.	MICRO-FILM NUMBER	MAINTENANCE CODE DATA: SOURCE CODE	INST'L CAPABILITY	PRE-INST'L CAPABILITY	RECOVERABILITY	SUPPORT EQUIPMENT	COGNIZANCE CODE	FEDERAL STOCK NUMBER DATA: FEDERAL STOCK NUMBER	MFG. CODE (TSMC)
209-31599- 9		1	DK203	M		O					
209-31599-101		1	DK203	M		O					
209-31601	32 - 4	1	DR316								
209-31601- 3		1	DR316	M		O					
209-31601- 5		1	DR316	M		O					
209-31601- 7		1	DR316	M		O					
209-31601- 9		1	DR316	M		O					
209-31601- 11		1	DR316	M		O					
209-31601- 13	44 - 99	2	DR316	M		O					
209-31601- 15		1	DR316	M		O					
209-31601- 17		1	DR316								
209-31601- 19		1	DR316								
209-31601- 21		1	DR316								
209-31601- 23		1	DR316								
209-31601- 25		1	DR316								
209-31601- 27		1	DR316								
209-31601- 29		1	DR316	M		O					
209-31601- 31		1	DR316	M		O					
209-31601-101		1	DR316	U							
209-31601-151		1	DR316	U							
209-31601-161		1	DR316	U							
209-31601-181		1	DR316	U							
209-31601-201		1	DR316	U							
209-31601-251		1	DR316	U							
209-31601-261		1	DR316	U							
209-31601-301		1	DR316	U							
209-31601-351		1	DR316	U							
209-31601-401		1	DR316	U							
209-31601-501		1	DR316	U							
209-31601-601		1	DR316	U							
209-31601-751		1	DR316	U							
209-31602		1	DN130	U							
209-31602-101		1	DN130	U							
209-31602-151		1	DN130	X1							
209-31602-201		1	DN130	U							
209-31602-301		1	DN130	X1							
209-31602-501		1	DN130	U							
209-31603		1	BT205	U							
209-31603-101		1	BT205	U							
209-31603-151		1	BT205	U							
209-31603-161		1	BT205	U							
209-31603-171		1	BT205	U							
209-31603-181		1	BT205	U							
209-31603-191		1	BT205	U							
209-31604-101		1	DK178	U							
209-31604-151		1	DK178	U							
209-31604-161		1	DK178	U							
209-31604-171		1	DK178	U							
209-31604-181		1	DK178	U							
209-31604-191		1	DK178	U							
209-31604-201		1	DK178	U							
209-31604-251		1	DK178	U							
209-31604-301		1	DK178	U							
209-31604-351		1	DK178	U							
209-31604-401		1	DK178	U							
209-31605		1	BS218	U							
209-31605-101		1	BS218	U							
209-31605-151		1	BS218	U							
209-31605-161		1	BS218	U							
209-31605-171		1	BS218	U							
209-31605-181		1	BS218	U							
209-31605-201		1	BS218	U							
209-31606		1	DG 94	U							
209-31606-101		1	DG 94	U							
209-31606-201		1	DG 94	U							
209-31606-301		1	DG 94	U							
209-31607	358 - 4	1	BK206	X1							
209-31607-101	358	1	BK206	X1							
209-31607-201	358	1	BK206	X1							
209-31607-301	358	1	BK206	X1							
209-31607-401		1	BK206	X1							
209-31608- 1	76 - 27	1	CU235	M		O					
209-31608- 2	76	1	CU235	M		O					
209-31609	71 - 21										
209-31610	71 - 20 71 - 21	1	DA148	M		O					
209-316101		1	BR167	M		O					
209-316101- 3		1	BR167	M		O					
209-316101- 5		1	BR167	M		O					
209-316101- 7		1	BR167	M		O					
209-316101- 9		1	BR167	M		O					
209-316101- 11		1	BR167	M		O					
209-316101- 12		1	BR167	M		O					
209-316101- 51		1	BR167	M		O					
209-316101- 61		1	BR167	M		O					
209-316102- 7		1	BK208	M		O					
209-316102- 8		1	BK208	M		O					
209-316102- 9		1	BK208	M		O					
209-316102- 10		1	BK208	M		O					
209-316102-101		1	BK208	M		O					
209-316102-102		1	BK208	M		O					
209-316103		1	BF410	M		O					
209-316103- 11		1	BF410	M		O					
209-316104		1	BF411	M		O					
209-316104- 11		1	BF411	M		O					
209-316105- 1		1	BF412	M		O					
209-316105- 2		1	BF412	M		O					
209-316106		1	CU 69	M		O					
209-316107- 1		1	BR175	M		O					
209-316107- 2		1	BR175	M		O					
209-316107- 3		1	BR175	M		O					
209-316107- 4		1	BR175	M		O					
209-316107- 5		10	BR175	M		O					
209-316108- 1		1	BK209	M		O					
209-316108- 2		1	BK209	M		O					
209-316108- 3		1	BK209	M		O					
209-316108- 4		1	BK209	M		O					
209-316108- 5		1	BK209	M		O					
209-316108- 6		1	BK209	M		O					
209-316108- 9		1	BK209	M		O					
209-316108- 10		1	BK209	M		O					
209-316109- 1		1	BF292	M		O					
209-316109- 2		1	BF292	M		O					
209-31611	73 358 - 5	1	DJ263	A		O					
209-31611- 3		1	DJ263	M		O					
209-31611- 5		1	DJ263	M		O					
209-31611- 7		1	DJ263	M		O					
209-31611- 9		1	DJ263	M		O					
209-31611- 10		1	DJ263	M		O					
209-31611- 11		2	DJ263	M		O					
209-31611- 13		48	DJ263	M		O					
209-31611- 15		2	DJ263	M		O					
209-31611- 17		8	DJ263	M		O					
209-31611- 19		2	DJ263	M		O					
209-31611- 21		2	DJ263	M		O					
209-31611- 23		1	DJ263	M		O					
209-31611- 24		1	DJ263	M		O					
209-31611- 25		2	DJ263	M		O					
209-31611- 27		1	DJ263	M		O					
209-31611- 29		1	DJ263	M		O					
209-31611- 30		1	DJ263	M		O					
209-31611-101	73 358	1	DJ263	A		O					
209-31611-201	73 358	1	DJ263								
209-31611-301	73 358	1	DJ263	A		O					
209-316110- 1		1	BS 22	M		O					
209-316110- 2		1	BS 22	M		O					
209-316110- 3		1	BS 22	M		O					
209-316110- 4		1	BS 22	M		O					
209-316110- 5		1	BS 22	M		O					
209-316110- 6		1	BS 22	M		O					
209-316111- 1		1	BX 75	M		O					
209-316111- 2		1	BX 75	M		O					
209-316111- 3		1	BX 75	M		O					
209-316111- 4		1	BX 75	M		O					
209-316111- 5		1	BX 75	M		O					
209-316111- 6		1	BX 75	M		O					
209-316112		1	BK211	M		O					
209-316113- 1		1	BS 15	M		O					
209-316113- 2		1	BS 15	M		O					
209-316113- 3		1	BS 15	M		O					
209-316113- 4		1	BS 15	M		O					
209-316113- 5		1	BS 15	M		O					
209-316113- 6		1	BS 15	M		O					
209-316113- 7		1	BS 15	M		O					
209-316113- 8		1	BS 15	M		O					
209-316113- 9		1	BS 15	M		O					
209-316113- 10		1	BS 15	M		O					
209-316113- 11		2	BS 15	M		O					
209-316114		1	BS210	M		O					
209-316115		1	BS 42	M		O					
209-316116- 1	73 - 21	1	BS150	M		O					
209-316116- 2	73	1	BS150	M		O					
209-316118- 1		1	BR170	M		O					
209-316118- 2		1	BR170	M		O					
209-316119- 1		1	BR171	M		O					
209-316119- 2		1	BR171	M		O					
209-31612	73	1	BR 49	A		O					
209-31612- 3		1	BR 49	M		O					
209-31612- 5		1	BR 49	M		O					
209-31612- 7	73	1	BR 49	M		O					
209-31612- 9		1	BR 49	M		O					
209-31612- 11		1	BR 49	M		O					
209-31612- 13		1	BR 49	M		O					
209-31612- 14		1	BR 49	M		O					
209-31612- 15		1	BR 49	M		O					
209-31612- 17		1	BR 49	M		O					
209-31612- 19		1	BR 49	M		O					
209-31612- 21		1	BR 49	M		O					
209-31612- 23		1	BR 49	M		O					
209-31612- 25		2	BR 49	M		O					
209-31612- 27		2	BR 49	M		O					
209-31612- 29		1	BR 49	M		O					
209-31612- 31		1	BR 49	M		O					
209-31612- 33		1	BR 49	M		O					
209-31612- 35		1	BR 49	M		O					
209-31612- 37		1	BR 49	M		O					
209-31612- 39		1	BR 49	M		O					
209-31612- 41		1	BR 49	M		O					
209-31612- 43		2	BR 49	M		O					
209-31612- 45		1	BR 49	M		O					
209-31612- 51		1	BR 49	M		O					
209-31612-101	73	1	BR 49	A		O					
209-31612-201	73	1	BR 49	A		O					
209-31612-301	73	1	BR 49	A		O					
209-316120		1	BF294	M		O					
209-316121- 1		1	BT206	M		O					
209-316121- 2		1	BT206	M		O					
209-316122- 1		1	BF295	M		O					
209-316122- 2		1	BF295	M		O					
209-316123- 1		1	BF296	M		O					
209-316123- 2		1	BF296	M		O					
209-316123- 3		1	BF296	M		O					
209-316124- 1		1	BF297	M		O					
209-316124- 2		1	BF297	M		O					
209-316124- 11		1	BF297	M		O					
209-316125- 1		1	BF298	M		O					

PART NUMBER	FIGURE AND INDEX	TOTAL QTY.	MICRO-FILM NUMBER	MAINTENANCE CODE DATA: SOURCE CODE	INSTL CAPABILITY	PRI-INSTL CAPABILITY	RECOVERABILITY	SUPPORT EQUIPMENT	COGNIZANCE CODE	FEDERAL STOCK NUMBER DATA: FEDERAL STOCK NUMBER	MFG. CODE (TSMC)
209-316125- 2		1	BF298	M		0					
209-316125- 3		1	BF298	M		0					
209-316125- 11		1	BF298	M		0					
209-316126- 1		1	BF299	M		0					
209-316126- 2		1	BF299	M		0					
209-316127- 1		1	BF300	M		0					
209-316127- 2		1	BF300	M		0					
209-316128- 1		1	CY 62	M		0					
209-316128- 2		1	CY 62	M		0					
209-316129- 1		1	BF302	M		0					
209-316129- 2		1	BF302	M		0					
209-31613	73	1	CX155	A		0					
209-31613- 3		1	CX155	M		0					
209-31613- 5		1	CX155	M		0					
209-31613- 7	73 - 20	1	CX155	M		0					
209-31613- 11		2	CX155	M		0					
209-31613- 13		2	CX155	M		0					
209-31613- 15		1	CX155	M		0					
209-31613- 17		1	CX155	M		0					
209-31613- 19		1	CX155	M		0					
209-31613- 21		1	CX155	M		0					
209-31613- 23		1	CX155	M		0					
209-31613- 25		1	CX155	M		0					
209-31613- 26		1	CX155	M		0					
209-31613- 27		1	CX155	M		0					
209-31613- 29		1	CX155	M		0					
209-31613- 31		1	CX155	M		0					
209-31613- 33		1	CX155	M		0					
209-31613- 35		1	CX155	M		0					
209-31613- 37		1	CX155	M		0					
209-31613- 39		1	CX155	M		0					
209-31613- 41		1	CX155	M		0					
209-31613- 43		1	CX155	M		0					
209-31613- 51		1	CX155	M		0					
209-31613- 53		1	CX155	M		0					
209-31613- 54		1	CX155	M		0					
209-31613- 55		1	CX155	M		0					
209-31613- 56		1	CX155	M		0					
209-31613- 57		1	CX155	M		0					
209-31613- 59		1	CX155	M		0					
209-31613- 61		3	CX155	M		0					
209-31613- 63		1	CX155	M		0					
209-31613- 65		1	CX155	M		0					
209-31613- 67		1	CX155	M		0					
209-31613- 69		1	CX155	M		0					
209-31613- 71		1	CX155	M		0					
209-31613- 73		1	CX155	M		0					
209-31613-101	73	1	CX155	A		0					
209-316130- 1		1	BR168	M		0					
209-316130- 2		1	BR168	M		0					
209-316131		2	BT207	M		0					
209-316131- 11		1	BT207	M		0					
209-316132- 1		1	BK132	M		0					
209-316132- 2		1	BK132	M		0					
209-316133		1	BF309	M		0					
209-316134- 1	73 - 22	1	BX194	M		0					
209-316134- 2	73	1	BX194	M		0					
209-316135- 1		1	BK304	M		0					
209-316135- 2		1	BK304	M		0					
209-316136- 1		1	BS 7								
209-316136- 2		1	BS 7								
209-316136- 3		1	BS 7	M		0					
209-316136- 4		1	BS 7	M		0					
209-316136- 5		1	BS 7								
209-316136- 6		1	BS 7								
209-316137- 1		1	BR176	M		0					
209-316137- 2		1	BR176	M		0					
209-316138- 1		1	BD 94	M		0					
209-316138- 2		1	BD 94	M		0					
209-316139- 1		1	BD 95	M		0					
209-316139- 2		1	BD 95	M		0					
209-31614	73	1	BT225	M		0					
209-31614- 3		1	BT225	M		0					
209-31614- 5		1	BT225	M		0					
209-31614- 7	73 - 17	1	BT225	M		0					
209-31614- 9	73 - 18	1	BT225	M		0					
209-31614- 11		1	BT225	M		0					
209-31614- 13		1	BT225	M		0					
209-31614- 14		1	BT225	M		0					
209-31614- 15		1	BT225	M		0					
209-31614- 16		1	BT225	M		0					
209-31614- 17	73 - 19	2	BT225	M		0					
209-31614- 19		1	BT225	M		0					
209-31614- 21	73 - 6	1	BT225	M		0					
209-31614- 23		1	BT225	M		0					
209-31614- 25		1	BT225	M		0					
209-31614- 51	73	1	BT225	M		0					
209-316140- 1		1	BF305	M		0					
209-316140- 2		1	BF305	M		0					
209-316141- 1		1	BF306	M		0					
209-316141- 2		1	BF306	M		0					
209-316142- 3		6	BD 96	M		0					
209-316142- 5		6	BD 96	M		0					
209-316143- 1		1	BK215	M		0					
209-316143- 2		1	BK215	M		0					
209-316144		1	BK216	M		0					
209-316145- 1		1	BF307	M		0					
209-316145- 2		1	BF307	M		0					
209-316146- 7		1	BK217	M		0					
209-316146- 8		1	BK217	M		0					
209-316147- 1		1	BF308	M		0					
209-316147- 2		1	BF308	M		0					
209-316148- 1		1	BF309	M		0					
209-316148- 2		1	BF309	M		0					
209-316149		1	BS 12	M		0					

PART NUMBER	FIGURE AND INDEX	TOTAL QTY.	MICRO-FILM NUMBER	MAINTENANCE CODE DATA: SOURCE CODE	INSTL CAPABILITY	PRI-INSTL CAPABILITY	RECOVERABILITY	SUPPORT EQUIPMENT	COGNIZANCE CODE	FEDERAL STOCK NUMBER DATA: FEDERAL STOCK NUMBER	MFG. CODE (TSMC)
209-316149- 3		1	BS 12	M		0					
209-31615		1		M		0					
209-31615- 3		1		M		0					
209-31615- 5	71 - 20	1		M		0					
	71 - 21										
209-31615- 51		1		M		0					
209-316150		2	BF310	M		0					
209-316151- 1	73 - 41	1	BS 40	M		0					
209-316151- 2	73	1	BS 40	M		0					
209-316152- 1	73 - 30	1	BR172	M		0					
209-316152- 2	73	1	BR172	M		0					
209-316153	77 - 19	1	BK218	M		0					
209-316154	77 - 25	1	BK219	M		0					
209-316155- 1	77 - 28	1	BR 83	M		0					
209-316155- 2	77	1	BR 83	M		0					
209-316156- 1	77 - 27	1	BF312	M		0					
209-316156- 2	77	1	BF312	M		0					
209-316156- 3		1	BF312	M		0					
209-316156- 4		1	BF312	M		0					
209-316156- 5		2	BF312	M		0					
209-316156- 7		2	BF312	M		0					
209-316157- 3	77 - 34	1	BT208	M		0					
209-316157- 4	77	1	BT208	M		0					
209-316157- 5	77 - 37	1	BT208	M		0					
209-316157- 6	77	1	BT208	M		0					
209-316157- 7	77 - 39	1	BT208	M		0					
209-316157- 8	77	1	BT208	M		0					
209-316158- 1	77 - 41	1	BF313	M		0					
209-316158- 2	77	1	BF313	M		0					
209-316159- 1	77 - 29	1	BK221	M		0					
209-316159- 2	77	1	BK221	M		0					
209-31616	73	1	BS 49	A		0					
209-31616- 3		1	BS 49	M		0					
209-31616- 5		1	BS 49	M		0					
209-31616- 7		1	BS 49	M		0					
209-31616- 9		1	BS 49	M		0					
209-31616- 11	73 - 56	1	BS 49	M		0					
209-31616- 13		1	BS 49	M		0					
209-31616- 15		2	BS 49	M		0					
209-31616- 17		1	BS 49	M		0					
209-31616- 19		1	BS 49	M		0					
209-31616- 20		1	BS 49	M		0					
209-31616- 21		1	BS 49	M		0					
209-31616- 22		1	BS 49	M		0					
209-31616- 23		1	BS 49	M		0					
209-31616- 25	73	2	BS 49	M		0					
209-31616- 27		2	BS 49	M		0					
209-31616- 29	73	1	BS 49	M		0					
209-31616- 31		1	BS 49	M		0					
209-31616- 33		1	BS 49	M		0					
209-31616- 34		1	BS 49	M		0					
209-31616- 35		1	BS 49	M		0					
209-31616- 37		1	BS 49	M		0					
209-31616- 38		1	BS 49	M		0					
209-31616- 39		1	BS 49	M		0					
209-31616- 40		1	BS 49	M		0					
209-31616- 41		2	BS 49	M		0					
209-31616- 43		4	BS 49	M		0					
209-31616- 45		1	BS 49								
209-31616- 47		1	BS 49	M		0					
209-31616- 49		1	BS 49	M		0					
209-31616- 51		1	BS 49	M		0					
209-31616- 53	73	1	BS 49	M		0					
209-31616-101	73	1	BS 49	A		0					
209-31616-201	73	1	BS 49	A		0					
209-316160		1	BF314	M		0					
209-316161- 1	77 - 36	3	BD 97	M		0					
	77 - 38										
	77 - 40										
209-316161- 2	77	3	BD 97	M		0					
209-316162- 1		2	BR 79	M		0					
209-316162- 2		2	BR 79	M		0					
209-316163- 1	77 - 42	1	BD 99	M		0					
209-316163- 2	77	1	BD 99	M		0					
209-316164	77 - 43	2	BD100	M		0					
209-316165	358	1	BF315	M		0					
209-316166		1	BF316	M		0					
209-316166- 11		1	BF316								
209-316166- 21		1	BF316	M		0					
209-316167- 1		1	BF317								
209-316167- 2		1	BF317								
209-316167- 3		1	BF317	M		0					
209-316167- 11		1	BF317	M		0					
209-316167- 21		1	BF317	M		0					
209-316168		2	BF318	M		0					
209-316169- 1		2	BS 43	M		0					
209-316169- 2		1	BS 43	M		0					
209-31617- 1	72 - 1	1	BR 48	A		0					
209-31617- 2	72 - 2	1	BR 48	A		0					
209-31617- 3		1	BR 48	M		0					
209-31617- 4		1	BR 48	M		0					
209-31617- 5		1	BR 48	M		0					
209-31617- 6		1	BR 48	M		0					
209-31617- 7		1	BR 48	M		0					
209-31617- 8		1	BR 48	M		0					
209-31617- 9		2	BR 48	M		0					
209-31617- 12	72	1	BR 46	A		0					
209-31617- 13		8	BR 46	M		0					
209-316170		1	BD101	M		0					
209-316171		3	BR 90	M		0					
209-316172		1	BS 10	M		0					
209-316172- 5		1	BS 10	M		0					
209-316172- 6		1	BS 10	M		0					
209-316172- 7		2	BS 10	M		0					
209-316172- 8		1	BS 10	M		0					

PART NUMBER	FIGURE AND INDEX	TOTAL QTY.	MICRO-FILM NUMBER	MAINTENANCE CODE DATA: SOURCE CODE	INSTL CAPABILITY	PRE-MFT'L CAPABILITY	RECOVERABILITY	SUPPORT EQUIPMENT	COGNIZANCE CODE	FEDERAL STOCK NUMBER DATA: FEDERAL STOCK NUMBER	MFG. CODE (TSMC)
209-316172- 11		1	BS 10	M		0					
209-316173		1	BS 11	M		0					
209-316173- 3		1	BS 11	M		0					
209-316173- 5		1	BS 11	M		0					
209-316173- 6		1	BS 11	M		0					
209-316174		2	CU 73	M		0					
209-316175	74 - 40	2	CU 71	M		0					
209-316176		1	BF320	M		0					
209-316177		1	BF321	M		0					
209-316178		1		M		0					
209-316179		1	BK222	M		0					
209-31618- 1	72 - 8	1	BS239	A		0					
209-31618- 2	72	1	BS239	A		0					
209-31618- 3		1	BS239	M		0					
209-31618- 4		1	BS239	M		0					
209-31618- 5		1	BS239	M		0					
209-31618- 6		1	BS239	M		0					
209-31618- 7		1	BS239	M		0					
209-31618- 8		1	BS239	M		0					
209-31618- 9		2	BS239	M		0					
209-31618- 11		1	BS239	M		0					
209-31618- 12		1	BS239	M		0					
209-316180- 1	76 - 11	1	CU240	M		0					
209-316180- 2	76	1	CU240	M		0					
209-316181- 1	76 - 12	1	CU243	M		0					
209-316181- 2	76	1	CU243	M		0					
209-316182- 1		1	BF322	M		0					
209-316182- 2		1	BF322	M		0					
209-316183- 1		1	BK225	M		0					
209-316183- 2		1	BK225	M		0					
209-316184		1	DQ 5								
209-316184- 1		1	DQ 5	M		0					
209-316184- 2		1	DQ 5	M		0					
209-316185- 1		1	BK226	M		0					
209-316185- 3		1	BK226	M		0					
209-316185- 5		1	BK226	M		0					
209-316185- 7		2	BK226	M		0					
209-316186		1	BK227	M		0					
209-316187		1	BF323	M		0					
209-316188		1	BF324	M		0					
209-316189		1	BS 21	M		0					
209-316189- 5		1	BS 21	M		0					
209-316189- 9		1	BS 21	M		0					
209-316189- 11		1	BS 21	M		0					
209-316189- 13		1	BS 21	M		0					
209-31619- 1	72 - 26	1	BS 27	A		0					
209-31619- 2	72	1	BS 27	A		0					
209-31619- 3		1	BS 27	M		0					
209-31619- 4		1	BS 27	M		0					
209-316190		1	BR 85	M		0					
209-316190- 3		1	BR 85	M		0					
209-316190- 5		1	BR 85	M		0					
209-316191		1	BF326	M		0					
209-316192		1	BK228	M		0					
209-316193		1	CU236	M		0					
209-316193- 3		1	CU236	M		0					
209-316193- 5		2	CU236	M		0					
209-316194		1	CU233	M		0					
209-316195		1	DN143								
209-316195- 1		1	DN143	M		0					
209-316195- 2		1	DN143	M		0					
209-316196		1	BK231	M		0					
209-316196- 3		1	BK231	M		0					
209-316196- 5		1	BK231	M		0					
209-316196- 7		1	BK231	M		0					
209-316197- 1		1	BR223	M		0					
209-316197- 2		1	BR223	M		0					
209-316198		2	BD106	M		0					
209-316199		4	BF327	M		0					
209-31620- 1		1	BR173	M		0					
209-31620- 2		1	BR173	M		0					
209-316201	71 - 30	1	BD107	M		0					
209-316201- 3		1	BD107	M		0					
209-316202- 1		1	BK232	M		0					
209-316202- 2		1	BK232	M		0					
209-316202- 3		1	BK232	M		0					
209-316202- 4		1	BK232	M		0					
209-316202- 5		2	BK232	M		0					
209-316203- 1		1	BF328	M		0					
209-316203- 2		1	BF328	M		0					
209-316203- 3		1	BF328	M		0					
209-316203- 4		1	BF328	M		0					
209-316203- 5		1	BF328	M		0					
209-316203- 6		1	BF328	M		0					
209-316204- 1		1	BF329	M		0					
209-316204- 2		1	BF329	M		0					
209-316205- 1		1	BF330	M		0					
209-316205- 2		1	BF330	M		0					
209-316206- 1		1	BS 33	M		0					
209-316206- 2		1	BS 33	M		0					
209-316207	31 - 10	4	BF331	P1	F	0	S		R	1560-031-4982	ANAA
209-316208	71 - 27	1	BK233	P1	F	0	S		R	1560-031-4983	ANAA
209-316208- 3		1	BK233	X1							
209-316208- 5		1	BK233	X1							
209-316209		1	BK234	M		0					
209-316209- 3		1	BK234	M		0					
209-316209- 5		1	BK234	M		0					
209-316209- 7		1	BK234	M		0					
209-316209- 11		1	BK234	M		0					
209-31621		1	DH197	M		0					
209-31621- 3		1	DH197	M		0					
209-31621- 5		1	DH197	M		0					
209-31621- 7		1	DH197	M		0					
209-31621- 9		2	DH197	M		0					
209-31621- 11		1	DH197	M		0					

PART NUMBER	FIGURE AND INDEX	TOTAL QTY.	MICRO-FILM NUMBER	MAINTENANCE CODE DATA: SOURCE CODE	INSTL CAPABILITY	PRE-MFT'L CAPABILITY	RECOVERABILITY	SUPPORT EQUIPMENT	COGNIZANCE CODE	FEDERAL STOCK NUMBER DATA: FEDERAL STOCK NUMBER	MFG. CODE (TSMC)
209-316210- 1		1	BF332	M		0					
209-316210- 2		1	BF332	M		0					
209-316211		1	BK235	M		0					
209-316212		1	CY 38	M		0					
209-316212- 3		1	CY 38	M		F					
209-316213- 1		2	BD108	M		0					
209-316213- 2		2	BD108	M		0					
209-316214		1	BF333	M		0					
209-316215- 1	77 - 35	1	BD109	M		0					
209-316215- 2	77	1	BD109	M		0					
209-316216- 1		1	BF314	M		0					
209-316216- 2		1	BF314	M		0					
209-316216- 3		1	BF314	M		0					
209-316216- 4		1	BF314	M		0					
209-316217	76 - 31	1	CU 70	M		0					
209-316217- 3		1	CU 70	M		0					
209-316217- 5		1	CU 70	M		0					
209-316218		1	BF335	M		0					
209-316219		1	BX 76	M		0					
209-316219- 3		1	BX 76	M		0					
209-31623- 3	76 - 4	1	BS 41	M		0					
209-31623- 4	76	1	BS 41	M		0					
209-316233		1	BF336	M		0					
209-316234		1	BK238	M		0					
209-316234- 3		1	BK238	M		0					
209-316234- 5		1	BK238	M		0					
209-316235		1	BX112	M		0					
209-316235- 3		1	BX112	M		0					
209-316235- 5		1	BX112	M		0					
209-316236		1	BD111	M		0					
209-316237	71 - 30	1	BF338	M		0					
209-316237- 3		1	BF338	M		0					
209-31624		11	BD112	M		0					
209-31625	73	1	BR221	A		0					
209-31625- 3		2	BR221	M		0					
209-31625- 5		1	BR221	M		0					
209-31625- 6		1	BR221	M		0					
209-31625- 7		1	BR221	M		0					
209-31625- 11		2	BR221	M		0					
209-31625- 13		1	BR221	M		0					
209-31625- 15		1	BR221	M		0					
209-31625-101		1	BR221								
209-31626	73	1	BS 35	M		0					
209-31626- 3	73 - 55	2	BS 35	M		0					
209-31626- 4	73	1	BS 35	M		0					
209-31626- 5		1	BS 35	M		0					
209-31626- 7		1	BS 35	M		0					
209-31626- 9		1	BS 35	M		0					
209-31626- 10		1	BS 35	M		0					
209-31626- 11		1	BS 35	M		0					
209-31626- 12		1	BS 35	M		0					
209-31626- 13		1	BS 35	M		0					
209-31626- 14		1	BS 35	M		0					
209-31626- 15		1	BS 35	M		0					
209-31626- 16		1	BS 35	M		0					
209-31626- 17		1	BS 35	M		0					
209-31626- 18		1	BS 35	M		0					
209-31626- 19		1	BS 35	M		0					
209-31626- 20		1	BS 35	M		0					
209-31626- 21		2	BS 35	M		0					
209-31626- 25		1	BS 35	M		0					
209-31626- 26		1	BS 35	M		0					
209-31626- 27		1	BS 35	M		0					
209-31626- 28		1	BS 35	M		0					
209-31626- 29		1	BS 35	M		0					
209-31626- 30		1	BS 35	M		0					
209-31626- 31		2	BS 35	M		0					
209-31626- 33		2	BS 35	M		0					
209-31626- 35		2	BS 35	M		0					
209-31626- 37		2	BS 35	M		0					
209-31627		19	BD113	M		0					
209-31628- 1		1	BS 23	M		0					
209-31628- 2		1	BS 23	M		0					
209-31629- 1		1	BS 29	M		0					
209-31629- 2		1	BS 29	M		0					
209-31629- 5		2	BS 29	M		0					
209-31629- 7		1	BS 29	M		0					
209-31629- 8		1	BS 29	M		0					
209-31629- 9		1	BS 29	M		0					
209-31629- 10		1	BS 29	M		0					
209-31629- 11		2	BS 29	M		0					
209-31630- 1		1	BS 20	M		0					
209-31630- 2		1	BS 20	M		0					
209-31630- 3		1	BS 20	M		0					
209-31630- 4		1	BS 20	M		0					
209-31630- 7		1	BS 20								
209-31630- 8		1	BS 20	M		0					
209-31630- 9		1	BS 20	M		0					
209-31630- 51		1	BS 20	M		0					
209-31631- 1		1	BK239	M		0					
209-31631- 2		1	BK239								
209-31632- 1	73	1	BS 16								
209-31632- 2	73	1	BS 16	M		0					
209-31632- 3	73 - 28	1	BS 16	M		0					
209-31632- 4	73	1	BS 16	M		0					
209-31632- 7	73 - 29	1	BS 16	M		0					
209-31632- 8	73	1	BS 16	M		0					
209-31632- 10	73	1	BS 16	M		0					
209-31632- 13	73 - 25	1	BS 16	M		0					
209-31632- 14	73	1	BS 16	M		0					
209-31632- 15	73 - 27	1	BS 16	M		0					
209-31632- 16	73	1	BS 16	M		0					
209-31632- 17	73 - 26	1	BS 16	M		0					
209-31632- 19	73 - 24	1	BS 16	M		0					
209-31632- 20	73	1	BS 16	M		0					

PART NUMBER	FIGURE AND INDEX	TOTAL QTY.	MICRO-FILM NUMBER	MAINTENANCE CODE DATA: SOURCE CODE	INSTL CAPABILITY	PRE-INSTL CAPABILITY	RECOVERABILITY	SUPPORT EQUIPMENT	FEDERAL STOCK NUMBER DATA: COGNIZANCE CODE	FEDERAL STOCK NUMBER	MFG. CODE (TSMC)
209-31632- 21	73 - 29	1	BS 16	M		O					
209-31632- 22	73	1	BS 16	M		O					
209-31633- 1		1	BK240	M		O					
209-31633- 2		1	BK240	M		O					
209-31633- 3		2	BK240	M		O					
209-31633- 11		1	BK240	M		O					
209-31633- 12		1	BK240	M		O					
209-31634- 1		1	BS 18	M		O					
209-31634- 2		1	BS 18	M		O					
209-31635		1	BS 38	M		O					
209-31635- 3		1	BS 38	M		O					
209-31635- 5		1	BS 38	M		O					
209-31636	73	1	BR169	M		O					
209-31636- 3	73 - 2	1	BR169	M		O					
209-31636- 5	73 - 3	1	BR169	M		O					
209-31636- 7	73 - 1	1	BR169	M		O					
209-31636- 9		1	BR169	M		O					
209-31636- 10		1	BR169	M		O					
209-31636- 11		1	BR169	M		O					
209-31636- 51		1	BR169	M		O					
209-31637		1	BS 32	M		O					
209-31637- 3		1	BS 32	M		O					
209-31637- 5		1	BS 32	M		O					
209-31638		1	BS 31	M		O					
209-31638- 3		1	BS 31	M		O					
209-31638- 5		1	BS 31	M		O					
209-31638- 7		1	BS 31	M		O					
209-31638- 9		1	BS 31	M		O					
209-31638- 11		1	BS 31	M		O					
209-31638- 13		1	BS 31	M		O					
209-31638- 15		1	BS 31	M		O					
209-31638- 17		1	BS 31	M		O					
209-31638- 19		1	BS 31	M		O					
209-31638- 21		1	BS 31	M		O					
209-31638- 23		1	BS 31	M		O					
209-31638- 25		1	BS 31	M		O					
209-31639		1	BN202	M		O					
209-31639- 3		1	BN202	M		O					
209-31639- 5		1	BN202	M		O					
209-31639- 7		1	BN202	M		O					
209-31639- 9		1	BN202	M		O					
209-31639- 11		1	BN202	M		O					
209-31639- 13		1	BN202	M		O					
209-31639- 19		1	BN202	M		O					
209-31639- 21		1	BN202	M		O					
209-31639- 23		1	BN202	M		O					
209-31639- 25		1	BN202	M		O					
209-31639- 27		1	BN202	M		O					
209-31639- 29		1	BN202	M		O					
209-31639- 31		1	BN202	M		O					
209-31639- 33		1	BN202	M		O					
209-31639- 35		1	BN202	M		O					
209-31640- 1		1	BS 39	M		O					
209-31640- 2		1	BS 39	M		O					
209-31641		1	BS 24	M		O					
209-31641- 3		1	BS 24	M		O					
209-31641- 5		1	BS 24	M		O					
209-31641- 7		1	BS 24	M		O					
209-31641- 8		1	BS 24	M		O					
209-31641- 9		1	BS 24	M		O					
209-31641- 11		2	BS 24	M		O					
209-31642- 1	76 - 5	1	BK241	M		O					
209-31642- 2	76	1	BK241	M		O					
209-31643- 1		1	BK242	M		O					
209-31643- 2		1	BK242	M		O					
209-31644- 1		1	BS 30	M		O					
209-31644- 2		1	BS 30	M		O					
209-31645		1	BS 34	M		O					
209-31645- 3		1	BS 34	M		O					
209-31645- 5		1	BS 34	M		O					
209-31646		1	BR174	M		O					
209-31646- 3		1	BR174	M		O					
209-31646- 5		1	BR174	M		O					
209-31646- 6		1	BR174	M		O					
209-31647		1	BS 25	M		O					
209-31647- 3		1	BS 25	M		O					
209-31647- 5		1	BS 25	M		O					
209-31648		1	BF339	M		O					
209-31648- 3		1	BF339	M		O					
209-31648- 5		1	BF339	M		O					
209-31649- 1		1	BT211	M		O					
209-31649- 2		1	BT211	M		O					
209-31650- 1		1	BR222	M		O					
209-31650- 2		1	BR222	M		O					
209-31651		1	BR182	M		O					
209-31651- 3		1	BR182	M		O					
209-31651- 5		1	BR182	M		O					
209-31651- 6		1	BR182	M		O					
209-31652- 1		1	BR 65	M		O					
209-31652- 2		1	BR 65	M		O					
209-31653- 1		1	BS 2	M		O					
209-31653- 2		1	BS 2	M		O					
209-31654		1	DH217	M		O					
209-31654- 3		1	DH217	M		O					
209-31654- 5		1	DH217	M		O					
209-31654- 6		1	DH217	M		O					
209-31656	73 - 44	1	BF340	M		O					
209-31656- 11	73	1	BF340	M		O					
209-31657- 1	73	1	BR246	M		O					
209-31657- 2	73	1	BR246	M		O					
209-31657- 3	73 - 35	1	BR246	M		O					
209-31657- 4	73	1	BR246	M		O					
209-31657- 5	73 - 36	1	BR246	M		O					
209-31657- 6	73	1	BR246	M		O					
209-31657- 7		1	BR246	M		O					
209-31657- 8		1	BR246	M		O					
209-31657- 9		1	BR246	M		O					
209-31657- 10		1	BR246	M		O					
209-31657- 11		1	BR246	M		O					
209-31657- 12		1	BR246	M		O					
209-31657- 13		1	BR246	M		O					
209-31657- 14		1	BR246	M		O					
209-31657- 15		1	BR246	M		O					
209-31657- 17		1	BR246	M		O					
209-31657- 18		1	BR246	M		O					
209-31657- 19		1	BR246	M		O					
209-31657- 20		1	BR246	M		O					
209-31657- 21		1	BR246	M		O					
209-31657- 22		1	BR246	M		O					
209-31657- 24		1	BR246								
209-31657- 26		1	BR246	M		O					
209-31657- 28		1	BR246	M		O					
209-31657- 30		1	BR246	M		O					
209-31657- 32		1	BR246	M		O					
209-31657- 34		1	BR246	M		O					
209-31657- 36		1	BR246	M		O					
209-31657- 37		1	BR246	M		O					
209-31657- 38		1	BR246	M		O					
209-31657- 39		1	BR246	M		O					
209-31657- 40		1	BR246	M		O					
209-31657- 42		1	BR246	M		O					
209-31657- 49	73 - 34	1	BR246	M		O					
209-31657- 51	73 - 33	1	BR246	M		O					
209-31657-102	73	1	BR246	M		O					
209-31657-201		1	BR246	M		O					
209-31658		1	BR 44	M		O					
209-31658- 3		1	BR 44	M		O					
209-31658- 5		1	BR 44	M		O					
209-31658- 7		1	BR 44	M		O					
209-31658- 9		1	BR 44	M		O					
209-31658- 10		1	BR 44	M		O					
209-31658- 13		1	BR 44	M		O					
209-31658- 14		1	BR 44	M		O					
209-31658- 15		1	BR 44	M		O					
209-31658- 16		1	BR 44	M		O					
209-31658- 17		2	BR 44	M		O					
209-31658- 19		1	BR 44	M		O					
209-31658- 21		1	BR 44	M		O					
209-31658- 23		1	BR 44	M		O					
209-31658- 51		1	BR 44	M		O					
209-31659		1		M		O					
209-31659- 3		1		M		O					
209-31659- 5		1		M		O					
209-31659- 7		1		M		O					
209-31659- 8		1		M		O					
209-31660		1	BS 5	M		O					
209-31661- 1		1	BS 8	M		O					
209-31661- 2		1	BS 8	M		O					
209-31661- 3		1	BS 8	M		O					
209-31661- 4		1	BS 8	M		O					
209-31661- 5		1	BS 8	M		O					
209-31661- 6		1	BS 8	M		O					
209-31661- 7		1	BS 8	M		O					
209-31661- 8		1	BS 8	M		O					
209-31661- 9		1	BS 8	M		O					
209-31661- 10		1	BS 8	M		O					
209-31661- 11		1	BS 8	M		O					
209-31661- 13		1	BS 8	M		O					
209-31661- 14		1	BS 8	M		O					
209-31661- 15		1	BS 8	M		O					
209-31661- 16		1	BS 8	M		O					
209-31661- 17		1	BS 8	M		O					
209-31661- 18		1	BS 8	M		O					
209-31661- 19		1	BS 8	M		O					
209-31661- 20		1	BS 8	M		O					
209-31661- 23		1	BS 8	M		O					
209-31661- 25		1	BS 8	M		O					
209-31661- 27		1	BS 8	M		O					
209-31661- 29		1	BS 8	M		O					
209-31661- 31		1	BS 8	M		O					
209-31661- 35		1	BS 8	M		O					
209-31661- 41		1	BS 8	M		O					
209-31661- 43		1	BS 8	M		O					
209-31662		1	BR187	M		O					
209-31662- 3		1	BR187	M		O					
209-31662- 5		1	BR187	M		O					
209-31662- 7		1	BR187	M		O					
209-31662- 9		1	BR187	M		O					
209-31662- 11		1	BR187	M		O					
209-31662- 12		1	BR187	M		O					
209-31662- 13		1	BR187	M		O					
209-31662- 15		1	BR187	M		O					
209-31662- 51		1	BR187	M		O					
209-31663		1	BK244	M		O					
209-31664		1	BR186	M		O					
209-31664- 3		1	BR186	M		O					
209-31664- 5		1	BR186	M		O					
209-31665		1	BS 3	M		O					
209-31665- 51		1	BS 3	M		O					
209-31666		1	BR183	M		O					
209-31666- 3		1	BR183	M		O					
209-31666- 5		1	BR183	M		O					
209-31666- 7		1	BR183	M		O					
209-31666- 9		1	BR183	M		O					
209-31666- 11		1	BR183	M		O					
209-31666- 51		1	BR183	M		O					
209-31667- 1		1	BR241	M		O					
209-31667- 2		1	BR241	M		O					
209-31667- 3		1	BR241	M		O					
209-31667- 4		1	BR241	M		O					

PART NUMBER	FIGURE AND INDEX	TOTAL QTY.	MICRO-FILM NUMBER	MAINTENANCE CODE DATA: SOURCE CODE	INSTL CAPABILITY	PRE-INST'L CAPABILITY	RECOVERABILITY	SUPPORT EQUIPMENT	FEDERAL STOCK NUMBER DATA: COGNIZANCE CODE	FEDERAL STOCK NUMBER	MFG. CODE (TSMC)
209-31667- 7		1	BR241	M		O					
209-31667- 8		1	BR241	M		O					
209-31667- 9		1	BR241	M		O					
209-31667- 51		1	BR241	M		O					
209-31668		1	BR184	M		O					
209-31668- 3		1	BR184	M		O					
209-31668- 5		1	BR184	M		O					
209-31668- 7		1	BR184	M		O					
209-31669- 1		1	BU157	M		O					
209-31669- 2		1	BU157	M		O					
209-31669- 3		1	BU157	M		O					
209-31669- 4		1	BU157	M		O					
209-31669- 5		1	BU157	M		O					
209-31669- 6		1	BU157	M		O					
209-31669- 8		1	BU157	M		O					
209-31669- 9		1	BU157	M		O					
209-31669- 11		1	BU157	M		O					
209-31669- 12		1	BU157	M		O					
209-31669- 13		1	BU157	M		O					
209-31669- 15		1	BU157	M		O					
209-31669- 17		1	BU157	M		O					
209-31669- 19		1	BU157	M		O					
209-31669- 21		1	BU157	M		O					
209-31670- 3	72 - 4	1	BR181	P1	O	O	S		R	1560-031-4984	ANAA
209-31670- 4	72	1	BR181	P1	O	O	S		R	1560-031-4985	ANAA
209-31671- 3	72 - 9	1	BR244	P1	O	O	S		R	1560-037-2576	ANAA
209-31671- 4	72	1	BR244	P1	O	O	S		R	1560-037-2577	ANAA
209-31672- 3	72 - 3	1	CE 22	P1	O	O	S		R	1560-031-4986	ANAA
209-31672- 4	72	1	CE 22	P1	O	O	S		R	1560-031-4987	ANAA
209-31673		1	BR245	M		O					
209-31674		3	BD114	M		O					
209-31675- 1		1	BF342	M		O					
209-31675- 2		1	BF342	M		O					
209-31676	73	1	BR185	M		O					
209-31676- 3	73 - 15	1	BR185	M		O					
209-31676- 5	73 - 16	1	BR185	M		O					
209-31676- 7		1	BR185	M		O					
209-31676- 8		1	BR185	M		O					
209-31676- 9		1	BR185	M		O					
209-31676- 11		1	BR185	M		O					
209-31676- 13	73	1	BR185	M		O					
209-31676- 15		1	BR185	M		O					
209-31676- 51	73	1	BR185	M		O					
209-31677- 1		1	BR242	M		O					
209-31677- 2		1	BR242	M		O					
209-31677- 3		1	BR242	M		O					
209-31677- 4		1	BR242	M		O					
209-31677- 7		1	BR242	M		O					
209-31677- 8		1	BR242	M		O					
209-31677- 9		2	BR242	M		O					
209-31677- 13		2	BR242	M		O					
209-31677- 15		1	BR242	M		O					
209-31677- 16		1	BR242	M		O					
209-31677- 17		1	BR242	M		O					
209-31677- 18		1	BR242	M		O					
209-31677- 19		1	BR242	M		O					
209-31677- 20		1	BR242	M		O					
209-31677- 21		1	BR242	M		O					
209-31677- 22		1	BR242	M		O					
209-31677- 23		1	BR242	M		O					
209-31677- 24		1	BR242	M		O					
209-31677- 25		1	BR242	M		O					
209-31677- 26		1	BR242	M		O					
209-31677- 27		2	BR242	M		O					
209-31677- 29		2	BR242	M		O					
209-31677- 31		1	BR242	M		O					
209-31677- 32		1	BR242	M		O					
209-31677- 33		2	BR242	M		O					
209-31677- 35		1	BR242	M		O					
209-31677- 36		1	BR242	M		O					
209-31677- 38		1	BR242	M		O					
209-31677- 40		1	BR242	M		O					
209-31677- 42		1	BR242	M		O					
209-31677- 44		1	BR242	M		O					
209-31677- 46		1	BR242	M		O					
209-31677- 47		1	BR242	M		O					
209-31677- 49		1	BR242	M		O					
209-31677- 51		1	BR242	M		O					
209-31677- 52		1	BR242	M		O					
209-31677- 53		1	BR242	M		O					
209-31677- 55		1	BR242	M		O					
209-31677- 57		1	BR242	M		O					
209-31677- 58		1	BR242	M		O					
209-31677- 59		1	BR242	M		O					
209-31677- 60		1	BR242	M		O					
209-31677- 61		1	BR242	M		O					
209-31677-102		1	BR242	M		O					
209-31677-201		1	BR242	M		O					
209-31677-202		1	BR242	M		O					
209-31678		1	BK245	M		O					
209-31679- 1		1	BR240	M		O					
209-31679- 2		1	BR240	M		O					
209-31679- 3		1	BR240	M		O					
209-31679- 4		1	BR240	M		O					
209-31679- 5		1	BR240	M		O					
209-31679- 6		1	BR240	M		O					
209-31679- 7		1	BR240	M		O					
209-31679- 8		1	BR240	M		O					
209-31679- 9		2	BR240	M		O					
209-31679- 11		2	BR240	M		O					
209-31679- 15		1	BR240	M		O					
209-31679- 17		1	BR240	M		O					
209-31679- 19		1	BR240	M		O					
209-31679- 21		1	BR240	M		O					
209-31679- 23		1	BR240	M		O					
209-31679- 25		1	BR240	M		O					
209-31679- 51		1	BR240	M		O					
209-31680- 1		1	BS 9	M		O					
209-31680- 2		1	BS 9	M		O					
209-31680- 3		1	BS 9	M		O					
209-31680- 4		1	BS 9	M		O					
209-31680- 5		1	BS 9	M		O					
209-31680- 6		1	BS 9	M		O					
209-31680- 7		1	BS 9	M		O					
209-31680- 8		1	BS 9	M		O					
209-31680- 9		1	BS 9								
209-31680- 10		1	BS 9								
209-31680- 11	78 - 82	1	BS 9	M		O					
209-31680- 12	78	1	BS 9	M		O					
209-31681		1	BR243	M		O					
209-31681- 3		1	BR243	M		O					
209-31682	72 - 29	1	BK246	M		O					
209-31683- 1	73	1	BS 1	M		O					
209-31683- 2	73	1	BS 1	M		O					
209-31683- 3	73 - 32	1	BS 1	M		O					
209-31683- 4	73	1	BS 1	M		O					
209-31683- 5		1	BS 1	M		O					
209-31683- 6		1	BS 1	M		O					
209-31683- 7		1	BS 1	M		O					
209-31683- 8		1	BS 1	M		O					
209-31683- 9		1	BS 1	M		O					
209-31683- 10		1	BS 1	M		O					
209-31683- 13		1	BS 1	M		O					
209-31683- 14		1	BS 1	M		O					
209-31683- 15		1	BS 1	M		O					
209-31683- 16		1	BS 1	M		O					
209-31683- 17		1	BS 1	M		O					
209-31683- 18		1	BS 1	M		O					
209-31683- 19		1	BS 1	M		O					
209-31683- 20		1	BS 1	M		O					
209-31683- 23		1	BS 1	M		O					
209-31683- 24		1	BS 1	M		O					
209-31683- 25		1	BS 1	M		O					
209-31683- 26		1	BS 1	M		O					
209-31683- 27		1	BS 1	M		O					
209-31683- 28		1	BS 1	M		O					
209-31683- 29	73 - 31	1	BS 1	M		O					
209-31683- 30	73	1	BS 1	M		O					
209-31683- 51		1	BS 1	M		O					
209-31684- 1	76 - 6	1	BK247	M		O					
209-31684- 2	76	1	BK247	M		O					
209-31685		1	BS 6	M		O					
209-31685- 3		1	BS 6	M		O					
209-31685- 5		1	BS 6	M		O					
209-31685- 7		1	BS 6	M		O					
209-31685- 9		1	BS 6	M		O					
209-31685- 11		1	BS 6	M		O					
209-31685- 13		1	BS 6	M		O					
209-31685- 15		1	BS 6	M		O					
209-31685- 17		1	BS 6	M		O					
209-31686		1	CM195	M		O					
209-31686- 3		1	CM195	M		O					
209-31686- 5		1	CM195	M		O					
209-31686- 11		1	CM195	M		O					
209-31686- 13		1	CM195	M		O					
209-31686- 15		1	CM195	M		O					
209-31686- 17		1	CM195	M		O					
209-31687- 1		1	BT 86	M		O					
209-31687- 2		1	BT 86	M		O					
209-31687- 3		1	BT 86	M		O					
209-31687- 4		1	BT 86	M		O					
209-31687- 5		1	BT 86	M		O					
209-31687- 6		1	BT 86	M		O					
209-31687- 7		1	BT 86								
209-31687- 9		1	BT 86	M		O					
209-31688		1	BX244	M		O					
209-31688- 3		1	BX244								
209-31688- 5		1	BX244	M		O					
209-31688- 7		1	BX244	M		O					
209-31688- 11	71 - 13	1	BX244	M		O					
209-31688- 13		1	BX244	M		O					
209-31688- 14		1	BX244	M		O					
209-31688- 17		1	BX244	M		O					
209-31688- 19		1	BX244	M		O					
209-31688- 21		1	BX244	M		O					
209-31688- 23		1	BX244	M		O					
209-31688- 25		1	BX244	M		O					
209-31688- 27		1	BX244	M		O					
209-31688- 29		1	BX244	M		O					
209-31688- 31		1	BX244	M		O					
209-31688- 33		1	BX244	M		O					
209-31688- 35		1	BX244	M		O					
209-31688- 37		1	BX244	M		O					
209-31688- 45		1	BX244	M		O					
209-31688- 47		1	BX244	M		O					
209-31688- 49	71 - 75	1	BX244	M		O					
209-31688- 51		2	BX244	M		O					
209-31688- 61		1	BX244	M		O					
209-31688- 63		1	BX244	M		O					
209-31688- 65		1	BX244	M		O					
209-31688- 69		1	BX244	M		O					
209-31689		1	BK248	M		O					
209-31689- 3		1	BK248	M		O					
209-31689- 7		1	BK248	M		O					
209-31690		1	BK249	M		O					
209-31691		1	BK250	M		O					
209-31692		1	DH280	M		O					
209-31693		1	BX227	M		O					
209-31694		1	BX228	M		O					
209-31695		1	BX229	M		O					

PART NUMBER	FIGURE AND INDEX	TOTAL QTY.	MICRO-FILM NUMBER	MAINTENANCE CODE DATA: SOURCE CODE	INSTL CAPABILITY	PRI-INSTL CAPABILITY	RECOVERABILITY	SUPPORT EQUIPMENT	FEDERAL STOCK NUMBER DATA: COGNIZANCE CODE	FEDERAL STOCK NUMBER	MFG. CODE (TSMC)
209-31695- 3		1	BX229	M		O					
209-31695- 5		1	BX229	M		O					
209-31696		1	BX230	M		O					
209-31697		1	BX231	M		O					
209-31698		1	BX232	M		O					
209-31699		1	BX233	M		O					
209-31701- 3	76 - 2	1	BY193	X2							
209-31701- 4	76	1	BY193	X2							
209-31702	358	1	BF341	M		O					
209-31703- 1		1	BT 84	M		O					
209-31703- 2		1	BT 84	M		O					
209-31703- 3		1	BT 84	M		O					
209-31703- 4		1	BT 84	M		O					
209-31703- 6		1	BT 84	M		O					
209-31703- 12		1	BT 84	M		O					
209-31704		1	BT 77	M		O					
209-31704- 11		1	BT 77	M		O					
209-31705	74 - 36	2	CU 72	M		O					
209-31706		1	BR 39	M		O					
209-31706- 3		1	BR 39	M		O					
209-31706- 11		1	BR 39	M		O					
209-31706- 21		1	BR 39	M		O					
209-31707	74 - 39	2	CU 74	M		O					
209-31708- 1	76	1	BT 67	M		O					
209-31708- 2	76	1	BT 67	M		O					
209-31708- 3		1	BT 67	M		O					
209-31708- 4		1	BT 67	M		O					
209-31708- 7		1	BT 67	M		O					
209-31708- 8		1	BT 67	M		O					
209-31708- 9		1	BT 67	M		O					
209-31708- 10		1	BT 67	M		O					
209-31708- 13		1	BT 67	M		O					
209-31708- 15		1	BT 67	M		O					
209-31708- 17		1	BT 67	M		O					
209-31708- 18		1	BT 67	M		O					
209-31708- 19		1	BT 67	M		O					
209-31708- 20		1	BT 67	M		O					
209-31709	77 83 - 91	1	BT 18	M		O					
209-31709- 3	77 - 12	1	BT 18	M		O					
209-31709- 7		1	BT 18	M		O					
209-31709- 9	77	1	BT 18	M		O					
209-31709- 13	77	1	BT 18	M		O					
209-31709- 15	77	1	BT 18	M		O					
209-31709- 17	77	1	BT 18	M		O					
209-31709- 19	77	1	BT 18	M		O					
209-31709- 21	77	1	BT 18	M		O					
209-31709- 23		1	BT 18	M		O					
209-31709- 25		1	BT 18	M		O					
209-31709- 51	77 83	1	BT 18	M		O					
209-31709-101	77 83	1	BT 18	M		O					
209-31710- 1		1	BT 70	M		O					
209-31710- 2		1	BT 70	M		O					
209-31710- 11		1	BT 70	M		O					
209-317102	76	1	CX158	M		O					
209-317102- 3		1	CX158	M		O					
209-317102- 5		1	CX158	M		O					
209-317103- 1		1	CP 43	M		O					
209-317103- 2		1	CP 43	M		O					
209-317103- 11		1	CP 43	M		O					
209-317103- 12		1	CP 43	M		O					
209-317104		1	CP 42	M		O					
209-317104- 3		1	CP 42	M		O					
209-317104- 5		1	CP 42	M		O					
209-317105- 1		1	CP 50	M		O					
209-317105- 2		1	CP 50	M		O					
209-317105- 11		1	CP 50	M		O					
209-317105- 12		1	CP 50	M		O					
209-317106		1	CP 48	M		O					
209-317107		1	CU286	M		O					
209-317107- 3		1	CU286	M		O					
209-317107- 5		1	CU286	M		O					
209-317107- 9		1	CU286	M		O					
209-317108- 1		1	DN 40	M		O					
209-317108- 2		1	DN 40	M		O					
209-317109- 1		1	CY 60	M		O					
209-317109- 2		1	CY 60	M		O					
209-317109- 3		1	CY 60	M		O					
209-317109- 4		1	CY 60	M		O					
209-31711	76	1	CX154	A		O					
209-31711- 1		1	CX154								
209-31711- 3	77 - 14	1	CX154	P1	O	O	S		R	1560-511-1910	ANAA
209-31711- 5	77 - 15	1	GX154	P1	O	O	S		R	1560-544-8545	ANAA
209-31711- 6	77	1	CX154	P1	O	O	S		R	1560-544-8543	ANAA
209-31711- 7	77 - 16	1	CX154	P2	O	O	S		R	1560-511-1949	ANAA
209-31711- 9		2	CX154	M		O					
209-31711- 11		2	CX154	M		O					
209-31711- 13		2	CX154	M		O					
209-31711- 15		2	CX154	M		O					
209-31711- 17		2	CX154	M		O					
209-31711- 19		2	CX154	M		O					
209-31711- 21		1	CX154	M		O					
209-31711- 23		1	CX154	M		O					
209-31711- 27		1	CX154	M		O					
209-31711- 37		1	CX154	M		O					
209-31711- 38		1	CX154	M		O					
209-31711- 39		1	CX154	M		O					
209-31711-101	76	1	CX154	A		O					
209-31711-201	76	1	CX154	A		O					
209-31711-401	76	1	CX154	A		O					
209-317110- 1	76 - 33	1	DB 36	M		O					
209-317110- 2	76	1	DB 36	M		O					
209-317110- 3		1	DB 36	M		O					
209-317110- 4		1	DB 36	M		O					
209-317110- 5		1	DB 36	M		O					
209-317110- 6		1	DB 36	M		O					
209-317111		1	CU271	M		O					
209-317111- 1		1	CU271	M		O					
209-317111- 2		1	CU271	M		O					
209-317111- 3		1	CU271	M		O					
209-317111- 5		1	CU271	M		O					
209-317111- 6		1	CU271	M		O					
209-317112		1	CU296	M		O					
209-317112- 3		1	CU296	M		O					
209-317112- 4		1	CU296	M		O					
209-317112- 5		1	CU296	M		O					
209-317113- 1		1	CU246	M		O					
209-317113- 2		1	CU246	M		O					
209-317114- 1		1	CU247	M		O					
209-317114- 2		1	CU247	M		O					
209-317115- 1		1	CV123	M		O					
209-317115- 2		1	CV123	M		O					
209-317115- 3		1	CV123	M		O					
209-317115- 4		1	CV123	M		O					
209-317115- 5		1	CV123	M		O					
209-317115- 6		1	CV123	M		O					
209-317115- 7		1	CV123	M		O					
209-317115- 8		1	CV123	M		O					
209-317115- 9		1	CV123	M		O					
209-317115- 10		1	CV123	M		O					
209-317115- 11		1	CV123	M		O					
209-317115- 12		1	CV123	M		O					
209-317116- 1		1	CU278	M		O					
209-317116- 2		1	CU278	M		O					
209-317116- 3		1	CU278	M		O					
209-317116- 4		1	CU278	M		O					
209-317116- 5		1	CU278	M		O					
209-317116- 6		1	CU278	M		O					
209-317116- 7		1	CU278	M		O					
209-317116- 8		1	CU278	M		O					
209-317116- 9		1	CU278	M		O					
209-317116- 11		1	CU278	M		O					
209-317116- 13		1	CU278	M		O					
209-317116- 15		1	CU278	M		O					
209-317117- 1	76 - 23	1	CU267	M		O					
209-317117- 2	76	1	CU267	M		O					
209-317117- 3		1	CU267	M		O					
209-317117- 4		1	CU267	M		O					
209-317117- 5		1	CU267	M		O					
209-317117- 6		1	CU267	M		O					
209-317118		1	DF138	M		O					
209-317118- 3		1	DF138	M		O					
209-317118- 5		2	DF138	M		O					
209-317119	76 77	1	DH186	A		O					
209-317119- 3		1	DH186	M		O					
209-317119- 4		1	DH186	M		O					
209-317119- 5		1	DH186	M		O					
209-317119- 9		1	DH186	M		O					
209-317119- 11		1	DH186	M		O					
209-317119- 12		1	DH186	M		O					
209-317119- 13		1	DH186	M		O					
209-317119- 14		1	DH186	M		O					
209-317119- 15		1	DH186	M		O					
209-317119- 16		1	DH186	M		O					
209-317119- 17		1	DH186	M		O					
209-317119- 18		1	DH186	M		O					
209-317119- 19		1	DH186	M		O					
209-317119- 20		1	DH186	M		O					
209-317119- 21		1	DH186	M		O					
209-317119- 22		1	DH186	M		O					
209-317119- 23		1	DH186	M		O					
209-317119- 25		1	DH186	M		O					
209-317119- 27		1	DH186	M		O					
209-317119- 28		1	DH186	M		O					
209-317119- 29		1	DH186	M		O					
209-317119- 30		1	DH186	M		O					
209-317119- 31		1	DH186	M		O					
209-317119- 33		1	DH186	M		O					
209-317119- 34		1	DH186	M		O					
209-317119- 35		1	DH186	M		O					
209-317119- 36		1	DH186	M		O					
209-317119- 37		1	DH186	M		O					
209-317119- 38		1	DH186	M		O					
209-317119- 39		1	DH186	M		O					
209-317119- 40		1	DH186	M		O					
209-317119- 41		1	DH186	M		O					
209-317119- 42		1	DH186	M		O					
209-317119- 43		1	DH186	M		O					
209-317119- 44		1	DH186	M		O					
209-317119- 45		1	DH186	M		O					
209-317119- 46		1	DH186	M		O					
209-317119- 47		1	DH186	M		O					
209-317119- 48		1	DH186	M		O					
209-317119- 49		1	DH186	M		O					
209-317119- 50		1	DH186	M		O					
209-317119- 51		1	DH186	M		O					
209-317119- 53		1	DH186	M		O					
209-317119- 55		1	DH186	M		O					
209-317119- 57		1	DH186	M		O					
209-317119- 59		1	DH186	M		O					
209-317119- 61		1	DH186	M		O					
209-317119- 63		1	DH186	M		O					
209-317119- 67		1	DH186	M		O					
209-317119- 68		1	DH186	M		O					
209-317119- 71		1	DH186	M		O					
209-317119- 73		1	DH186	M		O					
209-317119- 74		1	DH186	M		O					

PART NUMBER	FIGURE AND INDEX	TOTAL QTY.	MICRO-FILM NUMBER	MAINTENANCE CODE DATA: SOURCE CODE	INSTL CAPABILITY	MIL-INSTL CAPABILITY	RECOVERABILITY	SUPPORT EQUIPMENT	FEDERAL STOCK NUMBER DATA: COGNIZANCE CODE	FEDERAL STOCK NUMBER	MFG. CODE (TSMC)
209-317119- 75		1	DH186	M		0					
209-317119- 77		1	DH186	M		0					
209-317119- 78		1	DH186	M		0					
209-317119- 79		1	DH186	M		0					
209-317119- 80		1	DH186	M		0					
209-317119- 81		1	DH186	M		0					
209-317119- 83		1	DH186	M		0					
209-317119- 85		1	DH186	M		0					
209-317119- 86		1	DH186	M		0					
209-317119- 87		1	DH186	M		0					
209-317119- 88		1	DH186	M		0					
209-317119- 91		1	DH186	M		0					
209-317119- 92		1	DH186	M		0					
209-317119- 93		1	DH186	M		0					
209-317119- 94		1	DH186	M		0					
209-317119- 95		1	DH186	M		0					
209-317119- 96		1	DH186	M		0					
209-317119- 97		1	DH186	M		0					
209-317119- 98		1	DH186	M		0					
209-317119- 99		1	DH186	M		0					
209-317119-100		1	DH186	M		0					
209-317119-103		1	DH186	M		0					
209-317119-104		1	DH186	M		0					
209-317119-105		1	DH186	M		0					
209-317119-106		1	DH186	M		0					
209-317119-113	76 - 35	1	DH186								
209-317119-114	76	1	DH186								
209-317119-117		1	DH186	M		0					
209-317119-118		1	DH186	M		0					
209-317119-119		1	DH186	M		0					
209-317119-121		1	DH186	M		0					
209-317119-122		1	DH186	M		0					
209-317119-123		1	DH186	M		0					
209-317119-124		1	DH186	M		0					
209-31712- 1	76 77	1	BV176	M		0					
209-31712- 2	76 77	1	BV176	M		0					
209-31712- 3		1	BV176	M		0					
209-31712- 5		1	BV176	M		0					
209-31712- 7		1	BV176								
209-31712- 9		1	BV176	M		0					
209-31712- 10		1	BV176	M		0					
209-31712- 15		1	BV176	M		0					
209-31712- 23		1	BV176	M		0					
209-31712- 24		1	BV176	M		0					
209-31712- 25		1	BV176	M		0					
209-31712- 26		1	BV176	M		0					
209-31712- 27		1	BV176	M		0					
209-31712- 28		1	BV176	M		0					
209-31712- 29		1	BV176	M		0					
209-31712- 31		1	BV176	M		0					
209-31712- 33		1	BV176	M		0					
209-31712- 35		1	BV176	M		0					
209-31712- 37		1	BV176	M		0					
209-31712- 39		1	BV176	M		0					
209-31712- 41		1	BV176	M		0					
209-31712- 43		1	BV176	M		0					
209-31712- 45		1	BV176	M		0					
209-31712- 47		1	BV176	M		0					
209-31712- 49		1	BV176	M		0					
209-31712- 51		1	BV176	M		0					
209-31712- 53		1	BV176	M		0					
209-31712- 55		1	BV176	M		0					
209-31712- 57		1	BV176	M		0					
209-31712- 59		1	BV176	M		0					
209-31712- 61		1	BV176	M		0					
209-31712- 63		1	BV176	M		0					
209-31712- 65		1	BV176	M		0					
209-31712- 67		1	BV176	M		0					
209-31712- 71		1	BV176	M		0					
209-31712- 73		1	BV176	M		0					
209-31712- 75		1	BV176	M		0					
209-31712- 77		1	BV176	M		0					
209-31712- 79		2	BV176	M		0					
209-31712- 81		1	BV176	M		0					
209-31712- 82		1	BV176	M		0					
209-31712- 83		1	BV176	M		0					
209-31712- 85		1	BV176	M		0					
209-31712- 86		1	BV176	M		0					
209-31712- 87		1	BV176	M		0					
209-31712- 89		1	BV176	M		0					
209-31712- 91		1	BV176	M		0					
209-31712- 93		1	BV176	M		0					
209-31712-101	76 77	1	BV176	M		0					
209-31712-102	76 77	1	BV176	M		0					
209-31712-202	76 77	1	BV176								
209-31712-301	76 77	1	BV176	M		0					
209-31712-302	76 77	1	BV176	M		0					
209-317120		1	CU287	M		0					
209-317120- 3		1	CU287	M		0					
209-317120- 5		1	CU287	M		0					
209-317122		1	DM281	M		0					
209-317123- 1		1	DN113	M		0					
209-317123- 2		1	DN113	M		0					
209-317123- 3		1	DN113	M		0					
209-317123- 4		1	DN113	M		0					
209-317123- 5		1	DN113	M		0					
209-317123- 6		1	DN113	M		0					
209-317123- 7		1	DN113	M		0					
209-317123- 8		1	DN113	M		0					
209-317123- 9		1	DN113	M		0					
209-317123- 10		1	DN113	M		0					
209-317123- 11		1	DN113	M		0					
209-317123- 12		1	DN113	M		0					
209-317124- 1		1	CV 80	M		0					
209-317124- 2		1	CV 80	M		0					
209-317125	76 - 54	2	DC 49	M		0					
209-317126	77 - 8	1	BK260	M		0					
209-317127- 9		1	CU242	M		0					
209-317127- 10		1	CU242	M		0					
209-317127- 13		1	CU242	M		0					
209-317127- 14		1	CU242	M		0					
209-317128- 1		1	CU238	M		0					
209-317128- 2		1	CU238	M		0					
209-317128- 9		1	CU238	M		0					
209-317128- 10		1	CU238	M		0					
209-317128- 11		1	CU238	M		0					
209-317128- 12		1	CU238	M		0					
209-317129- 1		1	BD116	M		0					
209-317129- 2		1	BD116	M		0					
209-31713	76 - 25	1	BT 65	M		0					
209-31713- 3		1	BT 65	M		0					
209-31713- 5		1	BT 65	M		0					
209-31713- 6		1	BT 65	M		0					
209-31713- 7		1	BT 65	M		0					
209-31713- 8		1	BT 65	M		0					
209-31713- 9		1	BT 65	M		0					
209-31713- 10		1	BT 65	M		0					
209-31713- 11		1	BT 65	M		0					
209-31713- 12		1	BT 65	M		0					
209-31713- 13		2	BT 65	M		0					
209-31713- 15		1	BT 65	M		0					
209-31713- 17		1	BT 65	M		0					
209-31713- 19		1	BT 65	M		0					
209-31713- 21		1	BT 65	M		0					
209-31713- 23		1	BT 65	M		0					
209-31713- 24		1	BT 65	M		0					
209-31713-101	76	1	BT 65	M		0					
209-317130		1	BT 88	M		0					
209-317130- 3		1	BT 88	M		0					
209-317130- 4		1	BT 88	M		0					
209-317130- 5		1	BT 88	M		0					
209-317130- 7		1	BT 88	M		0					
209-317130- 9		1	BT 88	M		0					
209-317131		1	BT 79	M		0					
209-317131- 3		1	BT 79	M		0					
209-317132		1	BT125	M		0					
209-317132- 3		1	BT125	M		0					
209-317132- 5		1	BT125	M		0					
209-317132- 7		1	BT125	M		0					
209-317132- 8		1	BT125	M		0					
209-317133		1	BX234	M		0					
209-317134- 1	76	1	BY243	M		0					
209-317134- 2	76	1	BY243	M		0					
209-317134- 3		1	BY243	M		0					
209-317134- 4		1	BY243	M		0					
209-317134- 5		1	BY243	M		0					
209-317134- 6		1	BY243	M		0					
209-317134- 7		1	BY243	M		0					
209-317134- 8		1	BY243	M		0					
209-317134- 9		1	BY243	M		0					
209-317134- 10		1	BY243	M		0					
209-317134- 11		1	BY243	M		0					
209-317134- 13		1	BY243	M		0					
209-317134- 31		1	BY243	M		0					
209-317134- 51	76	1	BY243	M		0					
209-317135- 1		1	BF343	M		0					
209-317135- 2		1	BF343	M		0					
209-317136	74 - 16	1	BK262	M		0					
209-317137		1	BT 82	M		0					
209-317137- 3		1	BT 82	M		0					
209-317137- 5		1	BT 82	M		0					
209-317138		1	BX 77	M		0					
209-317139		1	BF344	M		0					
209-31714	77	1	DS108	A		0					
209-31714- 3	77 - 2	1	DS108	M		0					
209-31714- 5	77 - 3	1	DS108	M		0					
209-31714- 7		1	DS108	M		0					
209-31714- 9		4	DS108	M		0					
209-31714- 13		3	DS108	M		0					
209-31714- 15		1	DS108	M		0					
209-31714- 17	77 - 5	2	DS108	M		0					
209-31714- 19	77	1	DS108	M		0					
209-31714- 21	77 - 4	1	DS108	M		0					
209-31714- 23		1	DS108	M		0					
209-31714- 24		1	DS108	M		0					
209-31714- 25		1	DS108	M		0					
209-31714- 26		1	DS108	M		0					
209-31714- 27		2	DS108	M		0					
209-31714- 29		1	DS108	M		0					
209-31714- 30		1	DS108	M		0					
209-31714- 31		1	DS108	M		0					
209-31714- 32		1	DS108	M		0					
209-31714- 33	77 - 1	1	DS108	M		0					
209-31714- 35	77	1	DS108	M		0					
209-31714- 37		1	DS108	M		0					
209-31714- 39		1	DS108	M		0					
209-31714- 41		1	DS108	M		0					
209-31714- 43		1	DS108	M		0					
209-31714- 45		1	DS108	M		0					
209-31714- 47		1	DS108	M		0					
209-31714- 49		1	DS108	M		0					
209-31714- 51		2	DS108	M		0					
209-31714- 55		1	DS108	M		0					

PART NUMBER	FIGURE AND INDEX	TOTAL QTY.	MICRO-FILM NUMBER	MAINTENANCE CODE DATA: SOURCE CODE	INSTL CAPABILITY	PRE-INSTL CAPABILITY	RECOVERABILITY	SUPPORT EQUIPMENT	FEDERAL STOCK NUMBER DATA: COGNIZANCE CODE	FEDERAL STOCK NUMBER	MFG. CODE (TSMC)
209-31714- 57		2	DS108	M		O					
209-31714- 61	77	1	DS108	M		O					
209-31714- 63		1	DS108	M		O					
209-31714-101	77	1	DS108	A		O					
209-31714-201		1	DS108	A		O					
209-31714-301	77	1	DS108	A		O					
209-317140		1	BF345	M		O					
209-317141		1	BT 14	M		O					
209-317142		1	BK264	M		O					
209-317143		1	CU234	M		O					
209-317144	358	1	BT 68	M		O					
209-317145		1	BK267								
209-317146		1	BY194								
209-317147		1	BD219								
209-317148		2	BY267								
209-317149		1	BK270								
209-31715	76 77	1	BW183	A		O					
209-31715- 3		1	BW183	M		O					
209-31715- 4		1	BW183	M		O					
209-31715- 5		1	BW183	M		O					
209-31715- 7		1	BW183	M		O					
209-31715- 8		1	BW183	M		O					
209-31715- 9		2	BW183	M		O					
209-31715- 11		1	BW183	M		O					
209-31715- 12		1	BW183	M		O					
209-31715- 13		1	BW183	M		O					
209-31715- 14		1	BW183	M		O					
209-31715- 15		2	BW183	M		O					
209-31715- 16		2	BW183	M		O					
209-31715- 17		1	BW183	M		O					
209-31715- 18		1	BW183	M		O					
209-31715- 19		1	BW183	M		O					
209-31715- 20		1	BW183	M		O					
209-31715- 21		1	BW183	M		O					
209-31715- 23		1	BW183	M		O					
209-31715- 25		1	BW183	M		O					
209-31715- 26		1	BW183	M		O					
209-31715- 27		2	BW183	M		O					
209-31715- 29		2	BW183	M		O					
209-31715- 31		1	BW183	M		O					
209-31715- 33		1	BW183	M		O					
209-31715- 35		1	BW183	M		O					
209-31715- 53		1	BW183	M		O					
209-31715- 54		1	BW183	M		O					
209-31715- 55		1	BW183	M		O					
209-31715- 57		1	BW183	M		O					
209-31715-101	76 77	1	BW183	A		O					
209-317150		1	BK271								
209-317151		1	BK272								
209-317152		1	BK273								
209-317153		1	BK274								
209-317154		1	BK275								
209-317155		1	BF348								
209-317156		1	BY132								
209-317156- 1		1	BY132								
209-317157		1	BF350								
209-317158		1	BF351								
209-317159		1	BF352								
209-31716		1	DH199	M		O					
209-31716- 3		1	DH199	M		O					
209-31716- 4		1	DH199	M		O					
209-31716- 5	74	1	DH199	M		O					
209-31716- 6	74	1	DH199	M		O					
209-31716- 7		1	DH199								
209-31716- 8		1	DH199	M		O					
209-31716- 9		1	DH199	M		O					
209-31716- 11		1	DH199	M		O					
209-31716-101		1	DH199	M		O					
209-317162- 1		1	CS142	M		O					
209-317162- 2		1	CS142	M		O					
209-317163		1	BS 54	M		O					
209-317163- 3		1	BS 54	M		O					
209-317163- 5		2	BS 54	M		O					
209-317163- 7		1	BS 54	M		O					
209-317164		1	BS151	M		O					
209-317165- 21		2	DE201	M		O					
209-317165- 23		1	DE201	M		O					
209-317165- 42		1	DE201								
209-31717- 1	76 - 1	1	BT 64	M		O					
209-31717- 2	76	1	BT 64	M		O					
209-31717- 3		1	BT 64	M		O					
209-31717- 4		1	BT 64	M		O					
209-31717- 5		1	BT 64	M		O					
209-31717- 6		1	BT 64	M		O					
209-317174- 3		1	CH280								
209-317175		1	CA245	M		O					
209-317175- 3		1	CA245	M		O					
209-317175- 5		1	CA245	M		O					
209-317175- 7		1	CA245	M		O					
209-317175- 9		1	CA245	M		O					
209-317175- 11		1	CA245	M		O					
209-317175- 13		1	CA245	M		O					
209-317175- 15		1	CA245	M		O					
209-317176		1	CA248	M		O					
209-317176- 3		1	CA248	M		O					
209-317176- 5		1	CA248	M		O					
209-317176- 7		1	CA248	M		O					
209-317176- 9		1	CA248	M		O					
209-317176- 11		1	CA248	M		O					
209-317176- 13		1	CA248	M		O					
209-317176- 15		1	CA248	M		O					
209-317177		1	CA252	M		O					
209-317177- 3		1	CA252	M		O					
209-317177- 5		1	CA252	M		O					
209-317177- 7		1	CA252	M		O					
209-317177- 9		1	CA252	M		O					
209-317177- 11		1	CA252	M		O					
209-317177- 13		1	CA252	M		O					
209-317177- 15		1	CA252	M		O					
209-317177- 17		1	CA252	M		O					
209-317177- 19		1	CA252	M		O					
209-317178		1	DE205	M		O					
209-317178- 3		1	DE205	M		O					
209-317178- 5		1	DE205	M		O					
209-317178- 7		1	DE205	M		O					
209-317178- 9		1	DE205	M		O					
209-317178- 11		1	DE205	M		O					
209-317178- 13		1	DE205	M		O					
209-317178- 15		1	DE205	M		O					
209-317178- 17		1	DE205	M		O					
209-317178- 19		1	DE205	M		O					
209-317178- 21		1	DE205	M		O					
209-317178- 23		1	DE205	M		O					
209-317179		2	CA289	M		O					
209-31718- 1	76 - 3	1	CU268	A		O					
209-31718- 2	76	1	CU268	A		O					
209-31718- 3		1	CU268	M		O					
209-31718- 4		1	CU268	M		O					
209-31718- 6		1	CU268	M		O					
209-31718- 7		1	CU268	M		O					
209-31718- 9		1	CU268	M		O					
209-31718- 10		1	CU268	M		O					
209-31718- 23		3	CU268	M		O					
209-31718- 24		3	CU268	M		O					
209-31718- 25		1	CU268	M		O					
209-31718- 26		1	CU268	M		O					
209-31718-101	76	1	CU268	A		O					
209-31718-102	76	1	CU268	A		O					
209-317180- 11		1	DN216	M		O					
209-317180- 12		1	DN216	M		O					
209-317181		1	CM221	M		O					
209-317182		1	CA260	M		O					
209-317183		1	CA261	M		O					
209-317184		1	CH222	M		O					
209-317185- 1		1	CM292	M		O					
209-31719	76 77	1	BT 76	P2	O	O	S		R	1560-569-1768	ANAA
209-31719- 5	77 - 52	1	BT 76	M		O					
209-31719- 9		1	BT 76	M		O					
209-31719- 10		1	BT 76	M		O					
209-31719- 13	77	1	BT 76	M		O					
209-31719- 17	77 - 20	1	BT 76	M		O					
209-31719- 18	77 - 21	1	BT 76	M		O					
209-31719- 19	77	1	BT 76	M		O					
209-31719- 21	77 - 31	1	BT 76	M		O					
209-31719- 22	77	1	BT 76	M		O					
209-31719- 27	77 - 48	1	BT 76	M		O					
209-31719- 28	77	1	BT 76	M		O					
209-31719- 31	77 - 50	1	BT 76	M		O					
209-31719- 32	77 - 51	1	BT 76	M		O					
209-31719- 33		1	BT 76	M		O					
209-31719- 35	77	1	BT 76	M		O					
209-31719- 36	77	1	BT 76	M		O					
209-31719- 37	77 - 47	1	BT 76	M		O					
209-31719- 38	77	1	BT 76	M		O					
209-31719- 39	77	1	BT 76	M		O					
209-31719- 41		3	BT 76	M		O					
209-31719- 43		1	BT 76	M		O					
209-31719- 47	77 - 17	1	BT 76	M		O					
209-31719- 51		1	BT 76	M		O					
209-31719- 53	77 - 33	1	BT 76	M		O					
209-31719- 54	77	1	BT 76	M		O					
209-31719- 55	77 - 45	1	BT 76	M		O					
209-31719- 56		1	BT 76	M		O					
209-31719- 57		1	BT 76	M		O					
209-31719- 58		1	BT 76	M		O					
209-31719- 59	77 - 44	1	BT 76	M		O					
209-31719- 60	77	1	BT 76	M		O					
209-31719- 61		1	BT 76	M		O					
209-31719- 63		1	BT 76	M		O					
209-31719- 65	77 - 32	1	BT 76	M		O					
209-31719- 66	77	1	BT 76	M		O					
209-31719- 67	77 - 46	1	BT 76	M		O					
209-31719- 68	77	1	BT 76	M		O					
209-31719- 69		2	BT 76	M		O					
209-31719- 71		1	BT 76	M		O					
209-31719- 73		2	BT 76	M		O					
209-31719- 75		2	BT 76	M		O					
209-31719- 77		2	BT 76	M		O					
209-31719- 79	77 - 24	1	BT 76	M		O					
209-31719- 81		2	BT 76	M		O					
209-31719- 83	77 - 18	1	BT 76	M		O					
209-31719- 85	77	1	BT 76	M		O					
209-31719- 87	77 - 26	1	BT 76	M		O					
209-31719- 91	76 77	1	BT 76	P2		O	S		R	1560-600-3784	ANAA
209-317191- 3		2		M		O					
209-317192		1		M		O					
209-317193		1	CB 5	M		O					
209-317195		1	DE160	M		O					
209-317196		3	DN144	M		O					
209-317197		1	DN138	M		O					
209-317198	74 - 1	1	DP 74	M		O					
209-317199		1	DP 75	M		O					
209-31720- 3	77 - 11	1	DN115	M		O					
209-31720- 4	77	1	DN115	M		O					
209-31720- 11	77	1	DN115	M		O					
209-31720- 12	77	1	DN115	M		O					

PART NUMBER	FIGURE AND INDEX	TOTAL QTY.	MICRO-FILM NUMBER	MAINTENANCE CODE DATA: SOURCE CODE	INST'L CAPABILITY	PRE-INST'L CAPABILITY	RECOVERABILITY	SUPPORT EQUIPMENT	FEDERAL STOCK NUMBER DATA: COGNIZANCE CODE	FEDERAL STOCK NUMBER	MFG. CODE (TSMC)
209-317200- 1		1	CU248	M		0					
209-317200- 2		1	CU248	M		0					
209-317201- 1		1	CU 63	M		0					
209-317201- 2		1	CU 63	M		0					
209-317202- 1		1	DB247	M		0					
209-317202- 2		1	DB247	M		0					
209-317203- 1	76	1	CV 75	M		0					
209-317203- 2	76	1	CV 75	M		0					
209-317204- 1	76 - 38	1	CY 13	M		0					
209-317204- 2	76	1	CY 13	M		0					
209-317205- 1		1	CZ 22	U							
209-317205- 2		1	CZ 22	U							
209-317205- 3		1	CZ 22	M		0					
209-317205- 4		1	CZ 22	M		0					
209-317205- 5		1	CZ 22	M		0					
209-317205- 6		1	CZ 22	M		0					
209-317205- 7		1	CZ 22	M		0					
209-317205- 8		1	CZ 22	M		0					
209-317205- 9		1	CZ 22	M		0					
209-317205- 10		1	CZ 22	M		0					
209-317205- 11		1	CZ 22	M		0					
209-317205- 12		1	CZ 22	M		0					
209-317205- 13		1	CZ 22	M		0					
209-317205- 14		1	CZ 22	M		0					
209-317205- 15		1	CZ 22	M		0					
209-317205- 16		1	CZ 22	M		0					
209-317205- 17		1	CZ 22	M		0					
209-317205- 18		1	CZ 22	M		0					
209-317205- 19		1	CZ 22	M		0					
209-317205- 20		1	CZ 22	M		0					
209-317205- 21		1	CZ 22	M		0					
209-317205- 22		1	CZ 22	M		0					
209-317205- 23		1	CZ 22	M		0					
209-317205- 24		1	CZ 22	M		0					
209-317205- 25		1	CZ 22	M		0					
209-317205- 27		2	CZ 22	M		0					
209-317206- 1		1	CZ147	M		0					
209-317206- 2		1	CZ147	M		0					
209-317206- 3		1	CZ147	M		0					
209-317206- 4		1	CZ147	M		0					
209-317207- 1	76 - 10	1	CZ146	M		0					
209-317207- 2	76	1	CZ146	M		0					
209-317208- 1		1	CV 28	M		0					
209-317208- 2		1	CV 28	M		0					
209-317209- 1		1	CV 16	M		0					
209-317209- 2		1	CV 16	M		0					
209-31721		1	BT 17	M		F					
209-31721- 3		1	BT 17	M		0					
209-31721- 9		1	BT 17	M		0					
209-317210		1	DJ160	U							
209-317210- 1		1	DJ160	M		0					
209-317210- 3		1	DJ160	M		0					
209-317210- 4		1	DJ160	M		0					
209-317210- 5		1	DJ160	M		0					
209-317210- 6		1	DJ160	M		0					
209-317210- 7		1	DJ160	M		0					
209-317210- 8		1	DJ160	M		0					
209-317210- 9		1	DJ160	M		0					
209-317210- 10		1	DJ160	M		0					
209-317210- 11		1	DJ160	M		0					
209-317210- 12		1	DJ160	M		0					
209-317210- 13		2	DJ160	M		0					
209-317211		1	DJ168	M		0					
209-317212- 1		1		M		0					
209-317212- 2		1		M		0					
209-317212- 3		1		M		0					
209-317212- 4		1		M		0					
209-317212- 5		1		M		0					
209-317212- 7		1		M		0					
209-317212- 9		1		M		0					
209-31722- 1		1	BT 63	M		0					
209-31722- 2		1	BT 63	M		0					
209-31723- 11		1	BT 15	M		0					
209-31724- 1	77 - 9	1	CX171	M		0					
209-31724- 2	77	1	CX171	M		0					
209-31724- 3	77	1	CX171	M		0					
209-31724- 4	77	1	CX171	M		0					
209-31724- 5	77 - 10	1	CX171	M		0					
209-31724- 6	77	1	CX171	M		0					
209-31724- 11	77	1	CX171	M		0					
209-31724- 12	77	1	CX171	M		0					
209-31724- 51	77	1	CX171	M		0					
209-31724- 52	77	1	CX171	M		0					
209-31725	76	1	BT 16	M		0					
209-31725- 3		1	BT 16	M		0					
209-31725- 5		1	BT 16	M		0					
209-31726		1	CB104	M		0					
209-31726- 11		1	CB104	M		0					
209-31726- 13		1	CB104	M		0					
209-31727		1	BT 78	M		0					
209-31727- 3		1	BT 78	M		0					
209-31727- 5		1	BT 78	M		0					
209-31727- 7		1	BT 78	M		0					
209-31727- 8		1	BT 78	M		0					
209-31728		1	BT213	M		0					
209-31729- 1	73 - 5	1	BK277	M		0					
209-31729- 2	73	1	BK277	M		0					
209-31730- 1	73 - 7	1	BR 73	M		0					
209-31730- 2	73	1	BR 73	M		0					
209-31731- 1		1	BX 78	M		0					
209-31731- 2	73	1	BX 78	M		0					
209-31732- 1	73 - 9	1	BK280	M		0					
209-31732- 2	73	1	BK280	M		0					
209-31733- 1	77 - 22	1	BU 15	M		0					
209-31733- 2	77	1	BU 15	M		0					
209-31733- 3	77	1	BU 15	M		0					
209-31733- 4	77	1	BU 15	M		0					
209-31733- 5	77 - 23	2	BU 15	M		0					
209-31734- 1		1	BK281	M		0					
209-31734- 2		1	BK281	M		0					
209-31735- 1		1	BK282	M		0					
209-31735- 2		1	BK282	M		0					
209-31736- 1		1	BK283	M		0					
209-31736- 2		1	BK283	M		0					
209-31736- 3		2	BK283	M		0					
209-31736- 5		2	BK283	M		0					
209-31736- 11		1	BK283	M		0					
209-31736- 12		1	BK283	M		0					
209-31737- 1		1	BK284	M		0					
209-31737- 2		1	BK284	M		0					
209-31737- 3		2	BK284	M		0					
209-31737- 11		1	BK284	M		0					
209-31737- 12		1	BK284	M		0					
209-31738		1	BT 66	M		0					
209-31738- 3		1	BT 66	M		0					
209-31738- 5		1	BT 66	M		0					
209-31739		1	BT 73	M		0					
209-31739- 3		1	BT 73	M		0					
209-31739- 5		1	BT 73	M		0					
209-31739- 7		1	BT 73	M		0					
209-31740		1	DJ207	M		0					
209-31741	74 - 8	1	BT 85	P1	F	0	R		R	1560-031-4988	ANAA
	358										
209-31741- 3		1	BT 85	M		0					
209-31741- 5		1	BT 85	M		0					
209-31741- 7		1	BT 85	M		0					
209-31741- 9		1	BT 85	M		0					
209-31741- 11		1	BT 85	M		0					
209-31741- 13		1	BT 85	M		0					
209-31741- 15		1	BT 85	M		0					
209-31741- 16		1	BT 85	M		0					
209-31741- 17		2	BT 85	M		0					
209-31741- 19		2	BT 85	M		0					
209-31741- 21		1	BT 85	M		0					
209-31741- 22		1	BT 85	M		0					
209-31741- 23		1	BT 85	M		0					
209-31741- 25	74 - 9	1	BT 85	M		0					
209-31741- 27		1	BT 85	M		0					
209-31741- 29		1	BT 85	M		0					
209-31741- 31		1	BT 85	M		0					
209-31741- 32		1	BT 85	M		0					
209-31741- 33		2	BT 85	M		0					
209-31741- 35		1	BT 85	M		0					
209-31741- 36		1	BT 85	M		0					
209-31741- 37		1	BT 85	M		0					
209-31741- 39		1	BT 85	M		0					
209-31741- 40		1	BT 85	M		0					
209-31741- 41		1	BT 85	M		0					
209-31741- 42		1	BT 85	M		0					
209-31741- 43		1	BT 85	M		0					
209-31741- 45		1	BT 85	M		0					
209-31741- 47		1	BT 85	M		0					
209-31741- 49		2	BT 85	M		0					
209-31741- 51		2	BT 85	M		0					
209-31741- 53		1	BT 85	M		0					
209-31741- 55		1	BT 85	M		0					
209-31741- 59		1	BT 85	M		0					
209-31741- 60		1	BT 85	M		0					
209-31741- 61		1	BT 85	M		0					
209-31741-101	74	1	BT 85						R	1560-588-6985	ANAA
	358										
209-31741-151		1	BT 85								
209-31741-201		1	BT 85								
209-31742- 1		1	BK286	M		0					
209-31742- 2		1	BK286	M		0					
209-31743- 1		1	BK287	M		0					
209-31743- 2		1	BK287	M		0					
209-31744- 1		1	BK305	M		0					
209-31744- 2		1	BK305	M		0					
209-31744- 3		2	BK305	M		0					
209-31744- 11		1	BK305	M		0					
209-31744- 12		1	BK305	M		0					
209-31745- 1		1	BK288	M		0					
209-31745- 2		1	BK288	M		0					
209-31745- 3		2	BK288	M		0					
209-31745- 11		1	BK288	M		0					
209-31745- 12		1	BK288	M		0					
209-31746		1	BK246	M		0					
209-31747- 1	72 - 90	1	BT 87	M		0					
209-31747- 2	72	1	BT 87	M		0					
209-31748- 1		1	BT214	M		0					
209-31748- 2		1	BT214	M		0					
209-31749		1	BF347	M		0					
209-31749- 1		1	BF347								
209-31749- 2		1	BF347								
209-31750	76 - 22	1	CU292	M		0					
209-31751- 1		1	BG 79	M		0					
209-31751- 2		1	BG 79	M		0					
209-31752- 1		1	BK291	M		0					
209-31752- 2		1	BK291	M		0					
209-31753		2	BK292	M		0					
209-31753- 1		1	BK292	M		0					
209-31753- 2		1	BK292	M		0					
209-31753- 3		2	BK292								
209-31753- 11		1	BK292	M		0					
209-31753- 12		1	BK292	M		0					
209-31754- 1		1	BK294	M		0					
209-31754- 2		1	BK294	M		0					
209-31754- 3		2	BK294	M		0					
209-31754- 11		1	BK294	M		0					

PART NUMBER	FIGURE AND INDEX	TOTAL QTY.	MICRO-FILM NUMBER	MAINTENANCE CODE DATA: SOURCE CODE	INSTL CAPABILITY	PRE-INSTL CAPABILITY	RECOVERABILITY	SUPPORT EQUIPMENT	COGNIZANCE CODE	FEDERAL STOCK NUMBER DATA: FEDERAL STOCK NUMBER	MFG. CODE (TSMC)
209-31754- 12		1	BK294	M		O					
209-31755- 1		1	BK296	M		O					
209-31755- 2		1	BK296	M		O					
209-31756- 1		1	BK297	M		O					
209-31756- 2		1	BK297	M		O					
209-31757- 1		1	BK295	M		O					
209-31757- 2		1	BK295	M		O					
209-31757- 3		2	BK295	M		O					
209-31757- 11		1	BK295	M		O					
209-31757- 12		1	BK295	M		O					
209-31758- 1		1	BK298	M		O					
209-31758- 2		1	BK298	M		O					
209-31758- 3		2	BK298	M		O					
209-31758- 11		1	BK298	M		O					
209-31758- 12		1	BK298	M		O					
209-31759- 1		1	BK299	M		O					
209-31759- 2		1	BK299	M		O					
209-31760- 1		1	BK300	M		O					
209-31760- 2		1	BK300	M		O					
209-31761- 1		1	BF475	M		O					
209-31761- 2		1	BF475	M		O					
209-31762- 1		1	BK301	M		O					
209-31762- 2		1	BK301	M		O					
209-31763	72 - 32 73	1	BT 75	A		O					
209-31763- 3	73 - 36	1	BT 75	P1	O	O	S		R	1560-031-4989	ANAA
209-31763- 5	73 - 42	1	BT 75	P1	O	O	S		R	1560-031-4990	ANAA
209-31763- 7	73 - 37	1	BT 75	P1	O	O	S		R	1560-031-4991	ANAA
209-31763- 9		1	BT 75	M		O					
209-31763- 11		1	BT 75	M		O					
209-31763- 13		1	BT 75	M		O					
209-31763- 15		1	BT 75	M		O					
209-31763- 17		1	BT 75	M		O					
209-31763- 18		1	BT 75	M		O					
209-31763- 19		1	BT 75	M		O					
209-31763- 20		1	BT 75	M		O					
209-31763- 21		1	BT 75	M		O					
209-31763- 22		1	BT 75	M		O					
209-31763- 23		1	BT 75	M		O					
209-31763- 24		1	BT 75	M		O					
209-31763- 25		4	BT 75	M		O					
209-31763- 26		4	BT 75	M		O					
209-31763- 27	73 - 39	1	BT 75	M		O					
209-31763- 29		1	BT 75	M		O					
209-31763- 30		1	BT 75	M		O					
209-31763- 31		16	BT 75	M		O					
209-31763- 33		2	BT 75	M		O					
209-31763- 35		2	BT 75	M		O					
209-31763- 36		1	BT 75	M		O					
209-31763- 37		8	BT 75	M		O					
209-31763- 41		4	BT 75	M		O					
209-31763- 43		4	BT 75	M		O					
209-31764	73 - 40	1	BT 89	M		O					
209-31764- 3	73	1	BT 89	M		O					
209-31764- 4	73	1	BT 89	M		O					
209-31764- 5	73	1	BT 89	M		O					
209-31764- 7	73	2	BT 89	M		O					
209-31764- 9	73	2	BT 89								
209-31764- 11		1	BT 89	M		O					
209-31764- 13	73	1	BT 89	M		O					
209-31765- 3		1	BG 80	M		O					
209-31765- 4		1	BG 80	M		O					
209-31766- 1		1	BG 81	M		O					
209-31766- 2		1	BG 81	M		O					
209-31767- 1		1	BG 82	M		O					
209-31767- 2		1	BG 82	M		O					
209-31768- 1		1	BY 62	M		O					
209-31768- 2		1	BY 62	M		O					
209-31768- 3		1	BY 62	M		O					
209-31768- 4		1	BY 62	M		O					
209-31768- 11		1	BY 62	M		O					
209-31768- 12		1	BY 62	M		O					
209-31769- 1		1	BK303	M		O					
209-31769- 2		1	BK303	M		O					
209-31771		1	BD117	M		O					
209-31772	72 - 31	1	BK304	M		O					
209-31772- 3		1	BK304	M		O					
209-31772- 5		1	BK304	M		O					
209-31772- 7		1	BK304	M		O					
209-31773		1	BG 83	M		O					
209-31774- 1		1	BG 84	M		O					
209-31774- 2		1	BG 84	M		O					
209-31775- 1		1	BT 53	M		O					
209-31775- 2		1	BT 53	M		O					
209-31775- 3		1	BT 53	M		O					
209-31775- 4		1	BT 53	M		O					
209-31775- 5		1	BT 53	M		O					
209-31775- 6		1	BT 53	M		O					
209-31775- 7		1	BT 53	M		O					
209-31775- 9		1	BT 53	M		O					
209-31775- 15		1	BT 53	M		O					
209-31775- 16		1	BT 53	M		O					
209-31775- 17		2	BT 53	M		O					
209-31775- 21		2	BT 53	M		O					
209-31775- 23		1	BT 53	M		O					
209-31775- 25		1	BT 53	M		O					
209-31775- 26		1	BT 53	M		O					
209-31775- 29		1	BT 53	M		O					
209-31775- 30		1	BT 53	M		O					
209-31775- 31		1	BT 53	M		O					
209-31775- 32		1	BT 53	M		O					
209-31775-101		1	BT 53	M		O					
209-31775-102		1	BT 53	M		O					
209-31776- 1		1	DK155	M		O					
209-31776- 2		1	DK155	M		O					

PART NUMBER	FIGURE AND INDEX	TOTAL QTY.	MICRO-FILM NUMBER	MAINTENANCE CODE DATA: SOURCE CODE	INSTL CAPABILITY	PRE-INSTL CAPABILITY	RECOVERABILITY	SUPPORT EQUIPMENT	COGNIZANCE CODE	FEDERAL STOCK NUMBER DATA: FEDERAL STOCK NUMBER	MFG. CODE (TSMC)
209-31777- 1		1	G 85	M		O					
209-31777- 2		1	G 85	M		O					
209-31778- 1		1	BD118	M		O					
209-31778- 2		1	BD118	M		O					
209-31779- 1		1	BD119	M		O					
209-31779- 2		1	BD119	M		O					
209-31780- 1		3	BD120	M		O					
209-31780- 2		3	BD120	M		O					
209-31781- 1		2	BD121	M		O					
209-31781- 2		2	BD121	M		O					
209-31782- 1		1	BG 86	M		O					
209-31782- 2		1	BG 86	M		O					
209-31783		2	BG 87	M		O					
209-31784- 1		5		M		O					
209-31784- 2		5		M		O					
209-31784- 3		5		M		O					
209-31784- 4		1									
209-31785- 1		1	BD122	M		O					
209-31785- 2		1	BD122	M		O					
209-31786		1	BT 12	M		O					
209-31786- 3		1	BT 12	M		O					
209-31786- 11		1	BT 12	M		O					
209-31787		1	BU 16	M		O					
209-31788		1	BD123	M		O					
209-31789- 1	73 - 10	1	BT 13	M		O					
209-31789- 2	73	1	BT 13	M		O					
209-31790- 1		1		M		O					
209-31790- 2		1		M		O					
209-31791	76 - 26	1	CU237	M		O					
209-31793- 1		1	DM154	M		O					
209-31793- 2		1	DM154	M		O					
209-31793- 3		1	DM154	M		O					
209-31793- 4		1	DM154	M		O					
209-31793- 11		1	DM154	M		O					
209-31793- 12		1	DM154	M		O					
209-31793- 22		1	DM154	M		O					
209-31794- 1	77 - 30	1	BD124	M		O					
209-31794- 2	77	1	BD124	M		O					
209-31795- 1		1	BT 48	M		O					
209-31795- 2		1	BT 48	M		O					
209-31795- 3		1	BT 48	M		O					
209-31795- 4		1	BT 48	M		O					
209-31795- 5		1	BT 48	M		O					
209-31795- 6		1	BT 48	M		O					
209-31796	77	1	BS204	M		O					
209-31796- 5	77 - 7	1	BS204	M		O					
209-31796- 7	77	1	BS204	M		O					
209-31796- 9	77 - 6	1	BS204	M		O					
209-31797		2	DK111	M		O					
209-31798	74 - 57	2	BK309	M		O					
209-31798- 3		2	BK309	M		O					
209-31798- 4		2	BK309	M		O					
209-31798- 5		2	BK309	M		O					
209-31799	76 - 43	1	BK 31	M		O					
209-31801		1	BU132	U							
209-31801- 3	63 - 34	1	BU132	M		F					
209-31802	52 54	1	DC 6	P1	F	O	R		R	1560-031-4992	ANAA
209-31802- 3	52 - 62	1	DC 6	M		O					
209-31802- 5	52 - 61	1	DC 6	M		F					
209-31802- 7	52 - 60	1	DC 6	M		F					
209-31802- 9	52 - 59	1	DC 6	M		F					
209-31802- 11	52 - 69	2	DC 6	M		O					
209-31802- 13	52 - 70	2	DC 6	M		O					
209-31802- 15	52 - 71	1	DC 6	M		F					
209-31802- 17		2	DC 6	M		O					
209-31802- 19	52 - 42	4	DC 6	M		O					
209-31802- 21	52 - 48	4	DC 6	M		O					
209-31802- 23	52 - 49	2	DC 6	M							
209-31802-101		1	DC 6								
209-31802-201		1	DC 6								
209-31802-301	52 54	1	DC 6						R	1560-586-0344	ANAA
209-31803	52 53	1	DM 79	X1							
209-31803- 3		1	DM 79	M		O					
209-31803- 4		1	DM 79	M		O					
209-31803- 5		1	DM 79	M		O					
209-31803- 6		1	DM 79	M		O					
209-31803- 7		1	DM 79	M		O					
209-31803- 8		1	DM 79	M		O					
209-31803- 15		1	DM 79	M		O					
209-31803- 17		1	DM 79	M		O					
209-31803- 19		2	DM 79	M		O					
209-31803- 21		1	DM 79	M		O					
209-31803- 22		1	DM 79	M		O					
209-31803- 25		1	DM 79	M		O					
209-31803- 27	53 - 65	3	DM 79	M		O					
209-31803- 29	53 - 64	1	DM 79	M		O					
209-31803- 31	53 - 57	1	DM 79	M		O					
209-31803- 33		1	DM 79	M		O					
209-31804	52 - 1	1	BT 61	P1	F	O	S		R	1560-031-4993	ANAA
209-31804- 3		1	BT 61	X1							
209-31804- 5		2	BT 61	X1							
209-31804- 7		1	BT 61	X1							
209-31804- 9		1	BT 61	X1							
209-31804- 11		2	BT 61	X1							
209-31804- 13		2	BT 61	X1							
209-31804- 15		1	BT 61	X1							
209-31804- 17		4	BT 61	X1							
209-31804-101		1	BT 61	X1							
209-31809	43 - 10	2	BT 60	M		O					
209-31810- 1	43 - 6	1	BT 46	M		O					
209-31810- 2	43	1	BT 46	M		O					
209-31811	52	1	BT 55	U							

PART NUMBER	FIGURE AND INDEX	TOTAL QTY.	MICRO-FILM NUMBER	MAINTENANCE CODE DATA: SOURCE CODE	INSTL CAPABILITY	PRE-INSTL CAPABILITY	RECOVERABILITY	SUPPORT EQUIPMENT	COGNIZANCE CODE	FEDERAL STOCK NUMBER DATA: FEDERAL STOCK NUMBER	MFG. CODE (TSMC)
209-31811- 3		1	BT 55	M		O					
209-31811- 4		1	BT 55	M		O					
209-31811- 5		1	BT 55	M		O					
209-31811- 6		1	BT 55	M		O					
209-31811- 7		1	BT 55	M		O					
209-31812	52 - 24	1	BN203	P1	F	O	C		R	1560-031-4994	ANAA
209-31812- 3		1	BN203	X1							
209-31812- 5		1	BN203	X1							
209-31812- 9		1	BN203	X1							
209-31812- 15		1	BN203	X1							
209-31812- 17		1	BN203	X1							
209-31812- 19		1	BN203	X1							
209-31812- 21		1	BN203	X1							
209-31813- 1		1	DC 96	M		O					
209-31813- 2		1	DC 96	M		O					
209-31814- 1	53 - 1	1	BT 80	X1							
209-31814- 2	53	1	BT 80	X1							
209-31814- 3		1	BT 80	M		O					
209-31814- 4		1	BT 80	M		O					
209-31814- 5		1	BT 80	M		O					
209-31814- 6		1	BT 80	M		O					
209-31814- 7		2	BT 80	M		O					
209-31814- 9		1	BT 80	M		O					
209-31814- 10		1	BT 80	M		O					
209-31814- 11		1	BT 80	M		O					
209-31814- 12		1	BT 80	M		O					
209-31814- 13		1	BT 80	M		O					
209-31814- 14		1	BT 80	M		O					
209-31814- 15		1	BT 80	M		O					
209-31814- 16		1	BT 80	M		O					
209-31815		1	BT 52	M		O					
209-31815- 9		1	BT 52	M		O					
209-31815- 11		1	BT 52	M		O					
209-31815- 13		1	BT 52	M		O					
209-31816	52 - 52	1	BT 49	M		O					
209-31816- 3		1	BT 49	M		O					
209-31816- 5		1	BT 49	M		O					
209-31817		1	BT 51	M		O					
209-31817- 3		1	BT 51	M		O					
209-31818		1	DQ245	U							
209-31819- 1		1	BT 54	M		O					
209-31819- 2		1	BT 54	M		O					
209-31819- 3		1	BT 54	M		O					
209-31819- 5		1	BT 54	M		O					
209-31819- 6		1	BT 54	M		O					
209-31819- 8		1	BT 54	M		O					
209-31821	51 - 25	1	BT 58	X2					R	1560-031-4995	ANAA
209-31822	51	1	BT 19	A		O					
209-31823	51 - 42	2	BD125	M		O					
209-31824	52 - 20	12	CR 13	M		O					
209-31825	52	1	BK311	P1	F	O	S		R	1560-031-4996	ANAA
209-31825- 3	52 - 33	1	BK311								
209-31826	52 - 41	1	DK 82	M		O					
209-31828	53 - 51	1	BK313	P1	F	O	S		R	1560-031-4997	ANAA
	54 - 72										
209-31832	51 - 3	1	BK314	P1	F	O	S		R	1560-569-1770	ANAA
209-31832- 3		1	BK314								
209-31833	43 - 22	2	BK315	M		O					
209-31834- 1	52 - 66	1	BT 20								
209-31834- 2	52	1	BT 20	M		O					
209-31834- 3		1	BT 20	M		O					
209-31834- 4		1	BT 20	M		O					
209-31834- 12		1	BT 20	M		O					
209-31834- 15	52	1	BT 20	M		O					
209-31836- 1		1	BT 57	M		O					
209-31836- 2		1	BT 57	M		O					
209-31836- 3		1	BT 57	M		O					
209-31836- 4		1	BT 57	M		O					
209-31836- 5		1	BT 57	M		O					
209-31836- 6		1	BT 57	M		O					
209-31837	48 - 20	1	BT 69	M		O					
209-31838	48 - 21	1	BT 72	M		O					
209-31838- 3	52 - 46	2	BT 72								
209-31841	50 - 56	1	DJ105	M		O					
209-31841- 3		1	DJ105	M		O					
209-31841- 5		1	DJ105	M		O					
209-31841- 7		1	DJ105	M		O					
209-31841- 9		1	DJ105	M		O					
209-31841- 11		1	DJ105	M		O					
209-31841- 13		1	DJ105	M		O					
209-31841- 15		1	DJ105	M		O					
209-31841- 17		1	DJ105	M		O					
209-31841- 19		1	DJ105	M		O					
209-31841- 21		1	DJ105	M		O					
209-31841- 23		1	DJ105	M		O					
209-31841- 25		1	DJ105	M		O					
209-31841- 27		1	DJ105	M		O					
209-31841- 29		1	DJ105	M		O					
209-31841- 31		1	DJ105	M		O					
209-31841- 33		1	DJ105	M		O					
209-31841- 35		1	DJ105	M		O					
209-31841- 37		1	DJ105	M		O					
209-31841- 39		1	DJ105	M		O					
209-31841- 41		1	DJ105	M		O					
209-31841- 43		1	DJ105	M		O					
209-31841- 45		1	DJ105	M		O					
209-31841- 47		1	DJ105	M		O					
209-31841- 49		1	DJ105	M		O					
209-31841- 51		1	DJ105	M		O					
209-31841- 53		1	DJ105	M		O					
209-31841- 55		1	DJ105	M		O					
209-31841- 57		1	DJ105	M		O					
209-31841- 59		1	DJ105	M		O					
209-31841- 65		1	DJ105	M		O					
209-31841- 69		1	DJ105	M		O					
209-31841- 71		1	DJ105	M		O					
209-31841- 73		1	DJ105	M		O					
209-31841- 75		1	DJ105	M		O					
209-31841- 77		1	DJ105	M		O					
209-31841- 79		2	DJ105	M		O					
209-31841- 81		1	DJ105	M		O					
209-31841- 82		1	DJ105	M		O					
209-31841- 83		1	DJ105	M		O					
209-31841- 85		1	DJ105	M		O					
209-31841- 87		1	DJ105	M		O					
209-31841-201		1	DJ105	M		O					
209-31843- 5	54	1	BK316	M		O					
209-31843- 7		1	BK316	M		O					
209-31843- 9	54	1	BK316	M		O					
209-31843- 11	54 - 12	1	BK316	P	F	O	C		R	1560-323-4153	ANAA
209-31843- 13	54	1	BK316								
209-31843- 21	54 - 12	1	BK316	P	F	O	C		R	1560-579-2177	ANAA
209-31844- 3	53 - 7	1	BK317	M		O					
209-31844- 2	53	1	BK317	M		O					
209-31846- 1		1	BG 90	M		O					
209-31846- 2		1	BG 90	M		O					
209-31846- 11		1	BG 90	M		O					
209-31846- 12		1	BG 90	M		O					
209-31847- 1		1	BG 91	M		O					
209-31847- 2		1	BG 91	M		O					
209-31848	50	1	CA 48	M		O					
209-31848- 3	50	1	CA 48	M		O					
209-31848- 5	50	2	CA 48	M		O					
209-31849	53 - 11	2	BG 92	M		O					
209-31850	52 - 53	1	BT 62	M		O					
209-31850- 3		1	BT 62	M		O					
209-31850- 5		1	BT 62	M		O					
209-31850- 7		1	BT 62	M		O					
209-31850- 9		1	BT 62	M		O					
209-31851	52 - 54	1	BT 47	M		O					
209-31851- 3		1	BT 47	M		O					
209-31852		1	BT 56	M		O					
209-31852- 3		1	BT 56	M		O					
209-31852- 5		1	BT 56	M		O					
209-31852- 6		1	BT 56	M		O					
209-31853		1	BK321	M		O					
209-31853- 3		1	BK321	M		O					
209-31853- 7	51 - 8	1	BK321	M		O					
209-31853- 9	51 - 9	1	BK321	M		O					
209-31854- 1		1	BT130	M		O					
209-31854- 2		1	BT130	M		O					
209-31854- 3		1	BT130	M		O					
209-31854- 4		1	BT130	M		O					
209-31854- 5		1	BT130	M		O					
209-31854- 6		1	BT130	M		O					
209-31854- 7		1	BT130	M		O					
209-31854- 8		1	BT130	M		O					
209-31855- 1	53	1	CV138	X1							
209-31855- 2	53	1	CV138	X1							
209-31855- 3		1	CV138	X1							
209-31855- 4		1	CV138	X1							
209-31855- 5		1	CV138	X1							
209-31855- 6		1	CV138	X1							
209-31856- 1		1	BT 34	X1							
209-31856- 2		1	BT 34	X1							
209-31857- 1	53 - 12	1	DK138	M		O					
209-31857- 2	53	1	DK138	M		O					
209-31858- 1	52 - 3	1	BT138	X2							
209-31858- 2	52	1	BT138	X2							
209-31859		1	BK318	M		O					
209-31859- 3		1	BK318	M		O					
209-31859- 5		1	BK318	M		O					
209-31860		1	BU165	M		O					
209-31860- 3		1	BU165	M		O					
209-31860- 5		1	BU165	M		O					
209-31860- 6		1	BU165	M		O					
209-31860- 7		1	BU165	M		O					
209-31860- 9		1	BU165	M		O					
209-31860- 11		2	BU165	M		O					
209-31860- 13		1	BU165	M		O					
209-31860- 15		1	BU165	M		O					
209-31860- 17		1	BU165	M		O					
209-31860- 21		1	BU165	M		O					
209-31860- 23		1	BU165	M		O					
209-31860- 25		1	BU165	M		O					
209-31860- 27		1	BU165	M		O					
209-31860- 29		1	BU165	M		O					
209-31860- 31		1	BU165	M		O					
209-31860- 33		1	BU165	M		O					
209-31860- 35		1	BU165	M		O					
209-31860- 37		1	BU165	M		O					
209-31861		1	BG 94	M		O					
209-31863		1	BK319	M		O					
209-31864- 3	51 - 59	2	DK156	X2							
209-31865	51	2	BK325	M		O					
209-31866	51 - 34	2	BG 95	M		O					
209-31867	51 - 57	1	BG 96	M		O					
209-31868	53 - 15	1	DJ153								
209-31868- 3		1	DJ153	X2							
209-31869- 1	54 - 22	1	BG 97	M		O					
209-31869- 2	54	1	BG 97	M		O					
209-31870	54 - 19	2	BD126	M		O					
209-31871	54 - 21	2	BD127	M		O					
209-31872	63 - 33	1	BD128	M		O					
209-31873- 3	54 - 13	2	BK322	X2							
209-31874	54 - 1	1	BK323	M		O					
209-31874- 3	54	1	BK323	M		O					
209-31876	54 - 71	1	BK324	P1	F	O	C		R	5930-031-4999	ANAA
209-31877	54 - 48	1	BD129	M		O					
209-31878		1	BK326	M		O					

PART NUMBER	FIGURE AND INDEX	TOTAL QTY.	MICRO-FILM NUMBER	MAINTENANCE CODE DATA: SOURCE CODE	INSTL CAPABILITY	PRI-MIT'L CAPABILITY	RECOVERABILITY	SUPPORT EQUIPMENT	COGNIZANCE CODE	FEDERAL STOCK NUMBER DATA: FEDERAL STOCK NUMBER	MFG. CODE (TSMC)
209-31878- 3		1	BK326	M		O					
209-31878- 5		1	BK326	M		O					
209-31878- 7		1	BK326	M		O					
209-31879- 3	54 - 52	1	BK327	X2							
209-31879- 5	54 - 64	1	BK327	X2							
209-31880	54 - 56	1	BD130	M		O					
209-31881	54 - 41	1	BG 98	M		O					
209-31882	54 - 70	1	DK139	M		O					
209-31883	53 - 67	1	BK328	M		O					
209-31883- 3		1	BK328	M		O					
209-31883- 5		1	BK328	M		O					
209-31884	54 - 58	1	BG106	M		O					
209-31885	54 - 39	1	BD131	M		O					
209-31886	54 - 58	1	BK329	X2							
209-31887		1	BK330	M		O					
209-31887- 3		1	BK330	M		O					
209-31887- 5		1	BK330	M		O					
209-31888	54 - 32	1	BK331	X2							
209-31889	54 - 27	1	BG101	M		O					
209-31889- 3	54	1	BG101	M		O					
209-31890	50 - 20	1	CA 69	M		O					
209-31890- 3	50	1	CA 69	M		O					
209-31891- 1	54 - 2	1	DG105	M		O					
209-31891- 2	54 - 3	1	DG105	M		O					
209-31891- 3	54	1	DG105	M		O					
209-31891- 4	54	1	DG105	M		O					
209-31892- 3	51 - 5	1	BT133	P1	F	O	S		R	1560-031-5000	ANAA
209-31893- 3	52	1	BK333	P1	F	O	C		R	1560-305-4130	ANAA
209-31894- 3	48 - 31	2	BK334	P1	O	O	S		R	1560-305-4131	ANAA
209-31895	52 - 47	2	BG102	M		O					
209-31896	53 - 13	1	BK335	P1	F	O	S		R	1560-031-5003	ANAA
209-31897		1	BK337	M		O					
209-31897- 3		1	BK337	M		O					
209-31898		1	BG103	M		O					
209-31899	43 -122	1	BK336	M		O					
209-31902	358	1	DE125	P1	F	O	R		R	1560-031-5004	ANAA
209-31902-101	358	1	DE125	P1	F	O	R		R	1560-569-2475	ANAA
209-31902-151		1	DE125								
209-31902-201	358	1	DE125	P1	F	O	R		R	1560-569-2490	ANAA
209-31902-301	358	1	DE125	P1	F	O	R		R	1560-596-4455	ANAA
209-32010- 2		1									
209-33001- 1		1	BT 21	U							
209-33001- 2		2	BT 21	U							
209-33009	25 - 60	1	CA231	P1	F	O	C		R	1560-522-4608	ANAA
	25 - 62										
209-33009- 3		2	CA231	X1							
209-33009- 5	25 - 63	2	CA231	X1							
209-33010- 1	25 - 58	1	BG104	M		O					
209-33010- 2	25	1	BG104	M		O					
209-33011	25 - 60	1	CA221	P	F	O	C				
	25 - 62										
209-33011- 3		1	CA221	M		O					
209-330131- 1		1	BT 14	U							
209-330131- 2		1	BT 14	U							
209-330131- 39	45 - 16	2	BT 14								
209-330141- 1	357	1	BU167	U							
209-330141- 2	357	1	BU167	U							
209-330142- 1	357	1	BX198	U							
209-330142- 2	357	1	BX198	U							
209-330161- 1		1	BT140	U							
209-330161- 2		1	BT140	U							
209-33031- 1		1	BT156								
209-33031- 2		1	BT156								
209-33101- 1		1	BT129	A		F					
209-33101- 2	25	1	BT129	A		F					
209-331145- 3	25 - 65	1	BT 37	P1	F	O	S		R	1560-031-5005	ANAA
209-331145- 4	25	1	BT 37	P1	F	O	S		R	1560-031-5006	ANAA
209-33123- 1	163 - 96	1	CD 60	P1	F	O	S		R	1560-570-2264	ANAA
209-33123- 2	163	1	CD 60	P1	F	O	S		R	1560-570-2265	ANAA
209-33123- 3		2	CD 60	X1							
209-33124	25 - 52	1									
209-33127- 1		1	BG106	M		O					
209-33127- 2		1	BG106	M		O					
209-33127- 3		1	BG106	M		O					
209-33127- 4		1	BG106	M		O					
209-33127- 7		1	BG106	M		O					
209-33127- 8		1	BG106	M		O					
209-33129	25 - 4	4	BG107	M		O					
209-33129- 11	25 - 4	4									
209-33130	25 - 11	2	DS 29	P	F	O	S		R	1560-031-5007	ANAA
209-33131	25 - 1	2	DS 30	P	F	O	S		R	1560-031-5008	ANAA
209-33136	25 - 43	2	BG110	P	F	O	C		R	5300-C00-1340	G190
209-33150- 1		1	BT 27	U							
209-33150- 2		1	BT 27	U							
209-33151- 3		2	BK339	X1							
209-33151- 5	25 - 35	1	BK339	P1	F	O	S		R	1560-037-2578	ANAA
209-33157	25 - 12	1	BG111	P					R	1560-037-2579	ANAA
	200 -142										
209-33157- 3	25 - 19	2	BG111	M		O					
209-33162	25 - 22	2	BD133	M		O					
209-33163	25 - 20	2	BD134	M		O					
209-33164		4	BD135	M		O					
209-33167	11 - 6	2	BG112	P	F	O	S		R	1560-037-2580	ANAA
209-33167- 3	11 - 8	2	BG112	M		O					
209-33168	11 - 10	2	BG113	M		O					
209-33169	11 - 9	2	BG114	M		O					
209-33170	11 - 7	2	BG115	M		O					
209-33171	11 - 12	2	BD136	P	F	O	C		R	5340-569-2644	ANAA
209-33172- 3	25 - 24	2	BK340	P1	F	O	S		R	1560-037-2581	ANAA
209-33173- 1	25 - 41	1	BK341	P1	F	O	C		R	1560-569-2647	ANAA
209-33173- 2	25	1	BK341	P1	F	O	C		R	1560-569-2677	ANAA
209-33173- 3		2	BK341	M		F					
209-33173- 4		1	BK341	X1							
209-33173- 5		1	BK341	X1							
209-33173- 11	25 - 41	1	BK341	P1	F	O	C		R	1560-610-5195	ANAA
209-33173- 12	25	1	BK341	P1	F	O	C		R	1560-610-5204	ANAA
209-33174	25 - 42	8	BD137	M		F					
209-33184	25 - 30	2									
209-33302- 3	45 - 30	1	BT146	P1	F	O	S		R	1560-031-5009	ANAA
209-33302- 4	45	1	BT146	P1	F	O	S		R	1560-031-5010	ANAA
209-33303		1	BT 42								
209-33303- 3	45 - 35	1	BT 42	P1	F	O	S		R	1500-C00-2278	ANAA
209-33304	45 - 9	4	BG117	P1	F	O	S		R	1560-031-5012	ANAA
209-33308- 3		2	BT141	X1							
209-33308- 11	45 - 22	2	BT141	P1	F	O	S		R	1560-031-5013	ANAA
209-333101		1	BJ130								
209-333101- 1	25 - 71	1	BJ130	P1	F	O	R		R	1560-031-5014	ANAA
	45 - 1										
209-333101- 2	25	1	BJ130	P1	F	O	R		R	1560-031-5015	ANAA
	45										
209-333101- 3		1	BJ130	X1							
209-333101- 4		1	BJ130	X1							
209-333101- 5		1	BJ130	X1							
209-333101- 6		1	BJ130	X1							
209-333101- 7		1	BJ130	M		O					
209-333101- 8		1	BJ130	M		O					
209-333101- 9		1	BJ130	M		O					
209-333101- 10		1	BJ130	M		O					
209-333101- 11		1	BJ130	M		O					
209-333101- 12		1	BJ130	M		O					
209-333101- 13		1	BJ130	M		O					
209-333101- 14		1	BJ130	M		O					
209-333101- 15		1	BJ130	M		O					
209-333101- 16		1	BJ130	M		O					
209-333101- 17		1	BJ130	M		O					
209-333101- 18		1	BJ130	M		O					
209-333101- 19		1	BJ130	M		O					
209-333101- 20		1	BJ130	M		O					
209-333101- 21		1	BJ130	M		O					
209-333101- 22		1	BJ130	M		O					
209-333101- 23		2	BJ130	M		O					
209-333101- 24		2	BJ130	M		O					
209-333101- 27		1	BJ130	M		O					
209-333101- 28		1	BJ130	M		O					
209-333101- 29		1	BJ130	M		O					
209-333101- 30		1	BJ130	M		O					
209-333101- 33		2	BJ130	M		O					
209-333101- 35		2	BJ130	M		O					
209-333101- 37		2	BJ130	M		O					
209-333101- 39		2	BJ130	M		F					
209-333101- 41		1	BJ130	M		O					
209-333101- 43	45	1	BJ130	M		O					
209-333101-101		1	BJ130								
209-333101-102		1	BJ130								
209-33311		4	BG118	M		O					
209-33312	45 - 25	2	BG119	P1	F	O	S		R	1560-031-5016	ANAA
209-33312- 3		2	BG119	M		O					
209-33313	45 - 31	2	BD138	M		O					
209-33314	23 - 70	1	BD139	M		O					
	45 - 34										
209-33315		4	BD140	M		O					
209-333151- 1	12 - 1	1	CE 4	P1	F	O	R		R	1560-037-2582	ANAA
	25 - 47										
209-333151- 2	12	1	CE 4	P1	F	O	R		R	1560-037-2583	ANAA
	25										
209-333151- 3		1	CE 4								
209-333151- 4		1	CE 4								
209-333151- 5		1	CE 4								
209-333151- 6		1	CE 4								
209-333151- 7		1	CE 4								
209-333151- 8		1	CE 4	M		O					
209-333151- 9		1	CE 4	M		O					
209-333151- 10		1	CE 4	M		O					
209-333151- 11		1	CE 4	M		O					
209-333151- 12		1	CE 4	M		O					
209-333151- 13		1	CE 4	M		O					
209-333151- 14		1	CE 4	M		O					
209-333151- 15		1	CE 4	M		O					
209-333151- 16		1	CE 4	M		O					
209-333151- 17		1	CE 4	M		O					
209-333151- 18		1	CE 4	M		O					
209-333151- 19		1	CE 4	M		O					
209-333151- 20		1	CE 4	M		O					
209-333151- 21		1	CE 4	M		O					
209-333151- 22		1	CE 4	M		O					
209-333151- 23		1	CE 4	M		O					
209-333151- 24		1	CE 4	M		O					
209-333151- 25		1	CE 4	M		O					
209-333151- 26		1	CE 4	M		O					
209-333151- 27		1	CE 4	M		O					
209-333151- 28		1	CE 4	M		O					
209-333151- 31		2	CE 4	M		O					
209-333151- 33		1	CE 4	M		O					
209-333151- 34		1	CE 4	M		O					
209-333151- 35		1	CE 4	M		O					
209-333151- 36		1	CE 4	M		O					
209-333151- 37		2	CE 4	M		O					
209-333151- 39		4	CE 4	M		O					
209-333151- 41		2	CE 4	M		O					
209-333151- 43	12 - 66	1	CE 4	M		O					
209-333151- 44	12	1	CE 4	M		O					
209-333151- 45		1	CE 4	M		O					
209-333151- 46		1	CE 4	M		O					
209-333151- 47	12 - 68	2	CE 4	M		O					
209-333151- 48	12 - 67	1	CE 4	M		O					
209-333151- 49	12	1	CE 4	M		O					
209-333151- 51	12	1	CE 4								
209-333151- 52	12	1	CE 4								
209-333151-101	12	1	CE 4	P1	F	O	R		R	1560-694-8027	ANAA
	25										

PART NUMBER	FIGURE AND INDEX	TOTAL QTY.	MICRO-FILM NUMBER	MAINTENANCE CODE DATA: SOURCE CODE	INST'L CAPABILITY	PRE-INST'L CAPABILITY	RECOVERABILITY	SUPPORT EQUIPMENT	FEDERAL STOCK NUMBER DATA: COGNIZANCE CODE	FEDERAL STOCK NUMBER	MFG. CODE (TSMC)
209-333151-102	12	1	CE 4	P1	F	O	R		R	1560-694-8028	ANAA
	25										
209-333151-51		1	CE 4								
209-333152- 1		1									
209-333152- 11		1									
209-333153	12 - 65	2	BT 41	X2					R	1560-037-2584	ANAA
209-333154- 3		2	BT 40	X1							
209-333154- 11	12 - 17	2	BT 40	P1	F	O	S		R	1560-037-2585	ANAA
209-333155- 3	12 - 21	1									
209-333156- 3		2	BT144	X1							
209-333156- 11	12 - 27	2	BT144	P1	F	O	S		R	1560-612-7241	ANAA
209-333157	12 - 31	2	BG120	M		O					
209-333158- 11		1							R	1560-037-2587	ANAA
209-333159	12	4	BG121	P	F	O	S		R	1560-037-2588	ANAA
209-33316- 1		1	BD141	M		O					
209-33316- 2		1	BD141	M		O					
209-333160	12 - 43	4	BG122	M		O					
209-333161	12 - 44	4	BD162	M		O					
209-333162- 3		2	CE114	X1							
209-333162- 11	12 - 32	2	CE114	P1	F	O	S		R	1560-522-8875	ANAA
209-333163	12 - 45	4	BG123	M		O					
209-333168- 1	12 - 4	1	BS219	A		O					
209-333168- 2	12	1	BS219	A		O					
209-333168- 11	12	1	BS219	A		O					
209-333168- 12	12	1	BS219	A		O					
209-333169- 3		1	BT124	X1							
209-333169- 4		1	BT124	X1							
209-333169- 11	316 - 37	1	BT124	P	F	O	C		R	1560-569-2681	ANAA
209-333169- 12	316	1	BT124	P1	F	O	C		R	1560-544-8551	ANAA
209-33317- 1	45 - 14	2	BD143	M		O					
209-33317- 2	45	2	BD143	M		O					
209-333170- 1	316 - 15	1	BG124	P1	F	O	S		R	1560-511-1978	ANAA
209-333170- 2	316	1	BG124	P1	F	O	S		R	1560-532-0100	ANAA
209-333173- 3	316 - 17	6	BD144	M		O					
209-333173- 5	316 - 16	2	BD144	M		O					
209-333174- 1	16 -184	1	BK342	M		O					
	316 - 86										
209-333174- 2	16	1	BK342	M		O					
	316										
209-333175	200 -119	1	BT147								
209-333175- 3	16 -177	1	BT147	X1							
209-333175- 4	16	1	BT147	X1							
209-333175- 11	316 - 75	1	BT147	P1	F	O	S		R	1560-569-2685	ANAA
209-333175- 12	316	1	BT147	P1	F	O	S		R	1560-569-2694	ANAA
209-333176	12 - 51	4	BD145	M		O					
209-333177	12 - 83	2	BD146	P	F	O	C		R	5315-530-8113	ANAA
	143 - 52										
209-333178- 1		1	BT 38								
209-333178- 2		1	BT 38								
209-333178- 3	16	1	BT 38	P1	F	O	C		R	1560-341-4656	ANAA
	316 - 87										
209-333178- 4	16	1	BT 38	P1	F	O	C		R	1560-341-4657	ANAA
	316										
209-333179- 1		1	BT134								
209-333179- 2		1	BT134								
209-333179- 3	16	1	BT134	P1	F	O	C		R	1560-341-4658	ANAA
	316 - 88										
209-333179- 4	16	1	BT134	P1	F	O	C		R	1560-341-4659	ANAA
	316										
209-33318	45 - 8	4	BD147	M		O					
209-333181- 1	11 - 28	1	BT128	P1	F	O	R		R	1560-505-8407	ANAA
	25 - 44										
209-333181- 2	11	1	BT128	P1	F	O	R		R	1560-505-8408	ANAA
	25										
209-333181- 3		1	BT128	M		O					
209-333181- 4		1	BT128	M		O					
209-333181- 5		1	BT128	M		O					
209-333181- 6		1	BT128	M		O					
209-333181- 7		1	BT128	M		O					
209-333181- 8		1	BT128	M		O					
209-333181- 9		1	BT128	M		O					
209-333181- 10		1	BT128	M		O					
209-333181- 11		2	BT128	M		O					
209-333182- 1	316 - 74	1	BG125	P1	F	O	S		R	1560-532-0105	ANAA
209-333182- 2	316	1	BG125	P1	F	O	S		R	1560-532-0106	ANAA
209-333183- 3		4	BD148	M		O					
209-333183- 5		2	BD148	M		O					
209-333183- 7		2	BD148	M		O					
209-333184- 3		4	BD149	M		F					
209-333184- 5		2	BD149	M		F					
209-333184- 7		2	BD149	M		F					
209-333185- 3	12 - 94	8	BD 15	M		F					
209-333185- 5	12 - 95	4	BD150	M		F					
209-333185- 7	12 - 96	4	BD150	M		F					
209-333187	316	2	BD151	P	F	O	C		R	1560-341-4460	ANAA
209-333187- 3	316 - 72	2	BD151	M		O					
209-333188	316	2	BD152	M		O					
209-333188- 3	316 - 29	2	BD152	M		O					
209-333189	316 - 42	2	BD153	M		O					
209-333190	316 - 43	2	BD155	M		O					
209-333191	316 - 31	2	BG126	P	F	O	C		R	5306-550-4148	ANAA
209-333192- 3		1	BT126	X1							
209-333192- 4		1	BT126	X1							
209-333192- 11	316 - 11	1	BT126	X2							
209-333192- 12	316	1	BT126	X2							
209-333193- 1	316	1	BK143	P1	F	O	S		R	1560-037-2590	ANAA
209-333193- 2	316	1	BK143	P1	F	O	S		R	1560-037-2591	ANAA
209-333194	316 - 93	2	BD156								
209-333194- 1		1	BD156	M		O					
209-333194- 2		1	BD156	M		O					
209-333195	316 - 25	2	BD157	M		O					
209-333196	316 - 34	2	BD158								
209-333196- 1		1	BD158	M		O					
209-333196- 2		1	BD158	M		O					
209-33320	45 -164	2	BD159	M		O					

PART NUMBER	FIGURE AND INDEX	TOTAL QTY.	MICRO-FILM NUMBER	MAINTENANCE CODE DATA: SOURCE CODE	INST'L CAPABILITY	PRE-INST'L CAPABILITY	RECOVERABILITY	SUPPORT EQUIPMENT	FEDERAL STOCK NUMBER DATA: COGNIZANCE CODE	FEDERAL STOCK NUMBER	MFG. CODE (TSMC)
209-33321- 1		1	BD160	M		O					
209-33321- 2		1	BD160	M		O					
209-33322- 3		2	BT139	X1							
209-33322- 11	45 - 22	2	BT139	P1	F	O	S		R	1560-333-7883	ANAA
209-33323	45 - 10	2	BD161	P1	F	O	C		R	1560-341-4661	ANAA
209-33323- 3	45	2	BD161	X1							
209-33324- 3	45 - 17	2	BG127	P1	F	O	C		R	9320-554-5468	ANAA
209-33325		2	BD162								
209-33325- 3	12 - 54	2	BD162	M		O					
209-33325- 5	12	1	BD162	M		O					
209-33352- 1	12 - 2	1									
209-33352- 11	12 - 3	2	BK344	X1							
209-33353		1	BT 32								
209-33366- 1	12 - 69	1	BK346	P1	F	O	S		R	1560-031-5018	ANAA
209-33366- 2	12	1	BK346	P1	F	O	S		R	1560-031-5019	ANAA
209-33367	12 - 87	2	BK347	P1	F	O	S		R	1560-031-5020	ANAA
209-33371- 1		1	BT 43								
209-33371- 2		1	BT 43								
209-33371- 3	12 - 85	1	BT 43	P1					R	1500-C00-2280	ANAA
209-33371- 4	12	1	BT 43	P1					R	1560-031-5022	ANAA
209-33378- 3		1	BT 29	X1							
209-33378- 4		1	BT 29	X1							
209-33378- 5	12 - 80	1	BT 29	P1	F	O	S		R	1560-037-2592	ANAA
209-33378- 6	12	1	BT 29	P1	F	O	S		R	1560-037-2593	ANAA
209-33379	12	4	BD170	M		O					
209-33382	11 - 29	2	BG131	M		O					
209-33382- 3		2	BG131	M		O					
209-33383	11 - 30	2	BG132	M		O					
209-33383- 3		2	BG132	M		O					
209-33384	11 - 38	2	BG133	M		O					
209-33384- 3		2	BG133	M		O					
209-33385- 1	11 - 44	1	BK349	M		O					
209-33385- 2	11	1	BK349	M		O					
209-33385- 3		1	BK349	M		O					
209-33385- 4		1	BK349	M		O					
209-33385- 5		1	BK349	M		O					
209-33385- 6		1	BK349	M		O					
209-33385- 7		1	BK349	M		O					
209-33385- 8		1	BK349	M		O					
209-33386- 3		1	BW 91	X1							
209-33386- 4		1	BW 91	X1							
209-33386- 5	12 - 79	1	BW 91	P1	F	O	S		R	1560-037-2594	ANAA
209-33386- 6	12	1	BW 91	P1	F	O	S		R	1560-037-2595	ANAA
209-33387	11 - 26	1									
209-33391- 1	12	1	BG135	A		F					
209-33391- 2	12	1	BG135	A		F					
209-33392- 1	12 - 62	1	BK350	P1	F	O	S		R	1560-697-8422	ANAA
209-33392- 2	12	1	BK350	P1	F	O	S		R	1560-697-8423	ANAA
209-33393	12 - 59	2	BG136	P	F	O	C		R	1560-511-1980	ANAA
209-33394- 1	12 - 60	1	BV237	P1	F	O	C		R	1560-511-1984	ANAA
209-33394- 2	12	1	BV237	P1	F	O	C		R	1560-569-2698	ANAA
209-33395	12 - 61	2	BG137	P1	F	O	C		R	1560-511-1987	ANAA
209-33396- 1	12 - 92	1	BK351	P1	F	O	S		R	1560-511-1994	ANAA
209-33396- 2	12	1	BK351	P1	F	O	S		R	1560-511-2019	ANAA
209-33397	12 - 91	1	BG138	P1	F	O	S		R	1560-511-2017	ANAA
209-33398	12 - 41	4	BE159	M		F					
209-33399	12 - 42	2	BE160	M		O					
209-33501		1	BT148								
209-33501- 1	25 - 45	1	BT148	P1	F	O	R		R	1560-031-5023	ANAA
	30										
209-33501- 2	25	1	BT148	P1	F	O	R		R	1560-031-5024	ANAA
	30										
209-33501- 3	30 - 79	2	BT148	M		O					
209-33501- 5	30 - 55	2	BT148	M		O					
209-33501- 11	30	1	BT148	A		F					
209-33501- 12	30	1	BT148	A		F					
209-33501- 21	30	1	BT148	A		F					
209-33501- 22	30	1	BT148	A		F					
209-33501- 31	30	1	BT148	A		F					
209-33501- 32	30	1	BT148	A		F					
209-33502- 3		1	BT 30	X1							
209-33502- 4		1	BT 30	X1							
209-33502- 11	30 - 26	1	BT 30	P1	F	O	S		R	1560-511-2021	ANAA
209-33502- 12	30	1	BT 30	P1	F	O	S		R	1560-511-2052	ANAA
209-33503- 3		1	BP173	X1							
209-33503- 4		1	BP173	X1							
209-33503- 11	30 - 81	1	BP173	P1	F	O	S		R	1560-569-2699	ANAA
209-33503- 12	30	1	BP173	P1	F	O	S		R	1560-569-2709	ANAA
209-33505	30 - 16	2	BD171	P1	F	O	C		R	1560-511-2091	ANAA
209-33506- 3		1	BT 45	X1							
209-33506- 4		1	BT 45	X1							
209-33506- 11	30 - 45	1	BT 45	P1	F	O	S		R	1560-511-2095	ANAA
209-33506- 12	30	1	BT 45	P1	F	O	S		R	1560-511-2130	ANAA
209-33507	30 - 48	2	BG139	P1	F	O	S		R	1560-037-2596	ANAA
209-33508	30 - 25	2	BG140	P1	F	O	S		R	1560-037-2597	ANAA
209-33509	30	2	BG141	P1	F	O	S		R	1560-511-2152	ANAA
209-33510- 1	30 - 80	1	BK352	P1	F	O	S		R	1560-037-2598	ANAA
209-33510- 2	30	1	BK352	P1	F	O	S		R	1560-037-2599	ANAA
209-33513	30 - 21	4	DN 54	M		O					
209-33514	30 - 14	2	DL236	P1	F	O	S		R	1560-511-2155	ANAA
209-33517- 3		1	BK353	X1							
209-33517- 4		1	BK353	X1							
209-33517- 11	30 - 10	1	BK353	X1							
209-33517- 12	30	1	BK353	X1							
209-335176- 3		1	BT131	X1							
209-335176- 4		1	BT131	X1							
209-335176- 11	45 - 67	1	BT131	P1	F	O	S		R	1560-031-5025	ANAA
209-335176- 12	45	1	BT131	P1	F	O	S		R	1560-031-5026	ANAA
209-33518	30 - 22	4	DR 41	M		F					
	45 - 68										
209-335181	45 - 38	2	DN 55	P	F	O	S		R	1560-570-2266	ANAA
209-335185	45 - 39	2	DN 56	P	F	O	S		R	1560-570-2267	ANAA
209-33519	30 - 9	2	BG143	P	F	O	C		R	1560-569-2712	ANAA
209-335192	23 - 69	1									
209-335192- 1	45 - 37	1	BG144	M		O					

PART NUMBER	FIGURE AND INDEX	TOTAL QTY.	MICRO-FILM NUMBER	MAINTENANCE CODE DATA: SOURCE CODE	INST'L CAPABILITY	PRE-INST'L CAPABILITY	RECOVERABILITY	SUPPORT EQUIPMENT	FEDERAL STOCK NUMBER DATA: COGNIZANCE CODE	FEDERAL STOCK NUMBER	MFG. CODE (TSMC)
209-335192- 2	45	1	BG144	M		O					
209-335198- 1	45 - 50	1	BK354	A		F					
209-335198- 2	45	1	BK354	A		F					
209-33520	30 - 12	2	BG145	M		O					
209-33523	30 - 17	A	RD622								
209-33523- 3		2	DL229	M		F					
209-33523- 5		4	DL229	M		F					
209-33523- 7		4	DL229	M		F					
209-33524	30 - 32	2	BD178	M		O					
209-33526	30	2	BK357	P	F	O	S		R	1560-569-2724	ANAA
209-33526- 3	30 - 52	2	BK357	M		O					
209-33531	30 - 5	2	BS152	X1							
209-33532- 3		1	DR119	X1							
209-33532- 4		1	DR119	X1							
209-33532- 11	30 - 35	1	DR119	P1	F	O	S		R	1560-569-2727	ANAA
209-33532- 12	30	1	DR119	P1	F	O	S		R	1560-569-2729	ANAA
209-33533	30 - 31	2	DK140	P	F	O	S		R	1560-569-2756	ANAA
209-33534	30 - 29	2	DK141	P1	F	O	S		R	5310-550-3573	ANAA
209-33536	30 - 77	2	BG148	M		O					
209-33537	30 - 56	2	BG150	M		O					
209-33538	30 - 24	2	BG151	P1	F	O	C		R	1560-511-2196	ANAA
209-33539	30 - 34	2		P1	F	O	C		R	1560-516-5957	ANAA
209-33540- 3	30 - 71	1	DL213	P1	F	O	S		R	1560-037-2600	ANAA
209-33540- 4	30	1	DL213	P1	F	O	S		R	1560-037-2601	ANAA
209-33541	30 - 64	2	BK358	P	F	O	C		R	5340-569-2757	ANAA
209-33542	30 - 61	2	BK359	P	F	O	C		R	5340-569-3494	ANAA
209-33543- 1	30 - 60	1	BK360	P	F	O	C		R	1560-569-3576	ANAA
209-33543- 2	30	1	BK360	P	F	O	C		R	1560-532-0117	ANAA
209-33544- 1	30 - 76	1	BK361	P	F	O	C		R	1560-532-0119	ANAA
209-33544- 2	30	1	BK361	P	F	O	C		R	1560-569-3831	ANAA
209-33546	30 - 78	2	BD180	M		O					
209-33547	30 - 15	2	BD181	P	F	O	C		R	1560-511-2164	ANAA
209-33548	30 - 7	2	BD182						R	5306-550-3563	ANAA
209-33549- 1	30 - 13	1	BD183								
209-33549- 2	30	1	BD183								
209-33550	30 - 68	2	BD184	M		O					
209-33568	45 - 55	2	BM342	M		O					
209-33569	45 - 72	2	BD186	M		O					
209-33571	45 - 40	2	DJ250	P1	F	O	S		R	1560-031-5027	ANAA
209-33571- 3	45 - 47	2	DJ250	M		O					
209-33572- 3	45 - 46	2	BG153	M		O					
209-33572- 5	25 - 18	2	BG153	M		O					
209-33573- 1	45 - 44	2	DK142	M		O					
209-33573- 3		2	DK142	M		O					
209-33573- 5		2	DK142	M		O					
209-33573- 11	25 - 16	1	DK142								
209-33574	45 - 48	2	BG155	M		O					
209-33574- 3		2	BG155	M		O					
209-33577- 3	45 -108	1	BK362	P1	F	O	S		R	1520-031-5028	ANAA
209-33577- 4	45	1	BK362	P1	F	O	S		R	1560-031-5029	ANAA
209-33578- 3		1	BK363	X1							
209-33578- 4		1	BK363	X1							
209-33578- 11	45 - 84	1	BK363	P1	F	O	S		R	1560-031-5030	ANAA
209-33578- 12	45	1	BK363	P1	F	O	S		R	1560-031-5031	ANAA
209-33579- 3		2	BK364	X1							
209-33579- 11	45 - 92	2	BK364	P1	F	O	S		R	1560-031-5032	ANAA
209-33582- 1	45 -141	2	BG157	M		O					
209-33582- 3	45 -121	2	BG157	M		O					
209-33582- 5	45 -146	2	BG157	M		O					
209-33582- 7	45 -128	2	BG157	M		O					
209-33582- 11	45 -144	2	BG157	M		O					
209-33582- 13	45 -124	2	BG157	M		O					
209-33584- 3		2	BK365	X1							
209-33584- 5	45 -116	2	BK365	P1	F	O	S		R	1560-031-5033	ANAA
209-33588- 3		2	BK366	X1							
209-33588- 5	45 -135	2	BK366	P1	F	O	S		R	1560-031-5034	ANAA
209-33590	45 -150	2	BK367	P1	F	O	S		R	1560-031-5035	ANAA
209-33590- 1		1	BK367								
209-33590- 2		1	BK367								
209-33591		2	BK368								
209-33591- 3	45 -155	2	BK368	P1	F	O	S		R	1560-031-5036	ANAA
209-33594- 3	45 - 45	2	BD188	M		O					
209-33594- 5	25 - 17	2	BD188	M		O					
209-33595- 1	45 -147	1	BK370	A		F					
209-33595- 2	45	1	BK370	A		F					
209-33599	45 -148	2	BD189	M		O					
	45 -149										
209-33600- 11	45 -106	1	BK373	A		F					
209-33600- 12	45	1	BK373	A		F					
209-33601		1	BK374								
209-33601- 5		2	BK374	M		O					
209-33601- 7		2	BK374	M		O					
209-33601- 11	45 -113	2	BK374	M		O					
209-33602- 5	45 -109	2	BG158	M		O					
209-33603	45 -146	2	BG159	M		O					
	45 -149										
209-33603- 3	45 -148	2	BG159	M		O					
	45 -149										
209-33610- 1	200 -140	1	BK375	P1	F	O	S		R	1560-569-3634	ANAA
209-33610- 2	200	1	BK375	P1	F	O	S		R	1560-569-3641	ANAA
209-33610- 3		1	BK375	X1							
209-33610- 4		1	BK375	X1							
209-336119- 1	200 -113	1	BG161	P1	F	O	S		R	1560-031-5037	ANAA
209-336119- 2	200	1	BG161	P1	F	O	S		R	1560-031-5038	ANAA
209-336120- 1	45 - 57	1	BG162	P1	F	O	S		R	1560-031-5039	ANAA
209-336120- 2	45	1	BG162	P1	F	O	S		R	1560-031-5040	ANAA
209-336121- 3		1	BK376	X1							
209-336121- 4		1	BK376	X1							
209-336121- 11	200 -126	1	BK376	P1	F	O	C		R	1560-511-2189	ANAA
209-336121- 12	200	1	BK376	P1	F	O	S		R	1560-511-2179	ANAA
209-336122- 3		1	BK377	X1							
209-336122- 4		1	BK377	X1							
209-336122- 11	200 -127	1	BK377	P1	F	O	S		R	1560-341-4662	ANAA
209-336122- 12	200	1	BK377	P1	F	O	S		R	1560-341-4663	ANAA
209-335125	200 -129	2	BF340	M		F					

PART NUMBER	FIGURE AND INDEX	TOTAL QTY.	MICRO-FILM NUMBER	MAINTENANCE CODE DATA: SOURCE CODE	INST'L CAPABILITY	PRE-INST'L CAPABILITY	RECOVERABILITY	SUPPORT EQUIPMENT	FEDERAL STOCK NUMBER DATA: COGNIZANCE CODE	FEDERAL STOCK NUMBER	MFG. CODE (TSMC)
209-336125- 3		2	BF340	M		F					
209-336126	200 -114	1	BD192	M		F					
209-336126- 3		2	BD192	M		F					
209-33617- 1	200 -137	1	BD193	P1	F	O	C		R	1560-905-4132	ANAA
209-33617- 2	200	1	BD193	P1	F	O	C		R	1560-905-4133	ANAA
209-33624- 1	45 - 78	1	BG164	P1	F	O	S		R	1560-612-7242	ANAA
209-33624- 2	45	1	BG164	P1	F	O	S		R	1500-C00-2262	ANAA
209-33627	200 -138	2	BD197	M		O					
209-337101- 7		1		M		O					
209-337105	200 - 39	1	BK382	M		O					
209-337105- 3		1	BK382	M		O					
209-337105- 5		1	BK382	M		O					
209-337105- 11		1	BK382	M		O					
209-337107	200 - 69	1	BT 25	X2							
209-337108	200 - 90	1	DG 95	M		O					
209-337108- 3		1	DG 95	M		O					
209-337108- 5		1	DG 95	M		O					
209-337108- 7		1	DG 95	M		O					
209-337108- 11		1	DG 95	M		O					
209-337109	200 - 87	1	BT142	X2							
209-33711	141 - 25	1	BG165	M		O					
	200 - 38										
	200 - 38	1									
209-337110- 3		1	BK384	M		O					
209-337110- 5		1	BK384	M		O					
209-337110- 11		1	BK384	M		O					
209-337111	200 - 37	1	DJ169	M		O					
209-337111- 3		1	DJ169	M		O					
209-337111- 5		2	DJ169	M		O					
209-337111- 7		1	DJ169	M		O					
209-337111- 8		1	DJ169	M		O					
209-337111- 11		1	DJ169	M		O					
209-337111- 12		1	DJ169	M		O					
209-337111- 21		1	DJ169	M		O					
209-337114		1									
209-337115	23 - 66	1	BT 36	M		O					
	200 -108										
209-337115- 3		1	BT 36	M		O					
209-337115- 5		1	BT 36	M		O					
209-337115- 9		1	BT 36	M		O					
209-337115- 10		1	BT 36	M		O					
209-337115- 11		1	BT 36	M		O					
209-337115- 12		1	BT 36	M		O					
209-337115- 21	200	1	BT 36	M		O					
209-337116	200	1	BG166	M		O					
209-33712	141 -108	1	BG167	M		O					
	200										
209-33712- 11	200 - 79	1	BG167	M		O					
209-33712- 13		1	BG167	M		O					
209-337120	200 - 43	1	DG114	M		O					
209-337120- 3		1	DG114	M		O					
209-337122	65 - 79	1									
	200 - 28										
	201 - 26										
209-337122- 3		1	BF429	M		O					
209-337124	200 - 88	1	BD198	M		O					
209-337124- 3		1	BD198	M		O					
209-337125	200 -107	1	BD199	M		O					
209-337125- 3		1	BD199	M		O					
209-33716	200 - 89	1	BK389	M		O					
209-33716- 3		1	BK389	M		O					
209-33716- 4		1	BK389	M		O					
209-33716- 5		1	BK389	M		O					
209-33716- 11	200	1	BK389	M		O					
209-33717		1	BM 66	M		O					
209-33717- 3		2	BM 66	M		O					
209-33717- 11	200 -102	1	BM 66	M		O					
209-33718		1	BM 67	M		O					
209-33718- 3		1	BM 67	M		O					
209-33719	200 -106	1	BG169	M		O					
209-33721		1	BG168	M		O					
209-33723	200 - 45	1	DG154	M		O					
209-33723- 3		1	BD200	M		O					
209-33726	200	1	BM 68	M		O					
209-33726- 3		1	BM 68	M		O					
209-33751		1		U							
209-338108- 7		1		M		O					
209-338987		2	BG134	M		O					
209-34001		1	BT 28	U							
209-34001-101		1	BT 28	U							
209-340142-101	287A- 59	1									
209-34101	64	1	BT180	A		F					
209-34102	64 -108	1	CE132	P1	F	O	C		R	1630-523-0799	ANAA
209-34301	40	1	DJ 1						R	1560-571-7121	ANAA
209-34351- 5		1									
209-34526	65	1	BG170								
209-34527	65 - 57	1									
209-34528	65 - 56	1									
209-34529	65 - 52	1									
209-34530- 3	65 - 65	1									
209-34531	65 - 72	1									
209-34532	65	1	BG174	M		O					
209-34532- 3	65 - 74	1									
209-34533	65 - 70	1									
209-34533- 3		1	BK391	M		O					
209-34533- 5		1	BK391	M		O					
209-34534	65 - 71	1									
209-34535	64 - 99	1	BG176	P1	F	O	S		R	1560-343-9129	ANAA
	65 - 49	1									
	67										
209-34536	67	1	BG177	M		O					
209-34536- 3	67 - 38	1	BG177	M		O					
209-34537	67	1	BD201	M		O					
209-34537- 3	67 - 34	1	BD201	M		O					
209-34538	67 - 36	1	BD202	M		O					

PART NUMBER	FIGURE AND INDEX	TOTAL QTY.	MICRO-FILM NUMBER	MAINTENANCE CODE DATA: SOURCE CODE	INSTL CAPABILITY	PRE-INSTL CAPABILITY	RECOVERABILITY	SUPPORT EQUIPMENT	FEDERAL STOCK NUMBER DATA: COGNIZANCE CODE	FEDERAL STOCK NUMBER	MFG. CODE (TSMC)
209-34539	67 - 37	1	BD203	M		O					
209-34540	67 - 39	1	BD204	M		F					
209-34541	65 - 60	1									
209-34542	65	1	BD206	M		O					
209-34543	65 - 64	1									
209-34701		1	BP 24	U							
209-34703- 3	85 - 7	1	BT190	P1	F	O	R		R	1560-031-5042	ANAA
209-34704	85 - 5	2	BK392	M		O					
209-34705- 3	85 - 4	2	BK393	M		O					
209-34705- 5	85 - 6	2	BK393	M		O					
209-34706	85 - 3	4	BG178	P	F	O	C		R	5310-031-5043	ANAA
209-34707	85 - 8	1	BK394	P	F	O	C		R	5310-031-5044	ANAA
209-34708	85 - 14	1	BK395	M		O					
209-34709	85 - 11	2	BK179	M		O					
209-34710	85 - 18	1	BK396	M		O					
209-39002- 1	78 - 1	1	BS251	P1	F	O	R		R	1560-031-5045	ANAA
209-39002- 2	78	1	BS251	P1	F	O	R		R	1560-031-5046	ANAA
209-39002- 3		1	BS251	X1							
209-39002- 4		1	BS251	X1							
209-39002- 5		1	BS251	M		O					
209-39002- 6		1	BS251	M		O					
209-39002- 7		1	BS251	M		O					
209-39002- 8		1	BS251	M		O					
209-39002- 9		1	BS251	M		O					
209-39002- 10		1	BS251	M		O					
209-39002- 11		1	BS251	M		O					
209-39002- 12		1	BS251	M		O					
209-39002- 13		1	BS251	M		O					
209-39002- 14		1	BS251	M		O					
209-39002- 15		1	BS251	M		O					
209-39002- 16		1	BS251	M		O					
209-39002- 17		1	BS251	M		O					
209-39002- 18		1	BS251	M		O					
209-39002- 19		1	BS251	M		O					
209-39002- 20		1	BS251	M		O					
209-39002- 21		1	BS251	M		O					
209-39002- 22		1	BS251	M		O					
209-39002- 23		1	BS251	M		O					
209-39002- 24		1	BS251	M		O					
209-39002- 25		1	BS251	M		O					
209-39002- 26		1	BS251	M		O					
209-39002- 27		2	BS251	M		O					
209-39002- 29		2	BS251	M		O					
209-39002- 31		2	BS251	M		O					
209-39002- 33	78 - 2	1	BS251	M		O					
209-39002- 34	78	1	BS251	M		O					
209-39002- 35	78 - 40	8	BS251	M		O					
209-39002- 37		2	BS251	M		O					
209-39002- 39		2	BS251	M		O					
209-39002- 41		2	BS251	M		O					
209-39002- 43		2	BS251	M		O					
209-39002- 45		2	BS251	M		O					
209-39002- 47		1	BS251	M		O					
209-39002- 48		1	BS251	M		O					
209-39002- 51		1	BS251	M		O					
209-39002- 52		1	BS251	M		O					
209-39002- 53		1	BS251	M		O					
209-39002- 54		1	BS251	M		O					
209-39002-101	78	1	BS251	P1	F	O	R		R	1560-511-2185	ANAA
209-39002-102	78	1	BS251	P1	F	O	R		R	1560-611-6540	ANAA
209-39003- 1	78 - 20	1	BT173	M		O					
209-39003- 2	78	1	BT173	M		O					
209-39003- 3		1	BT173	M		O					
209-39003- 4		1	BT173	M		O					
209-39003- 5		1	BT173	M		O					
209-39003- 6		1	BT173	M		O					
209-39003- 7		1	BT173	M		O					
209-39003- 8		1	BT173	M		O					
209-39003- 9		1	BT173	M		O					
209-39003- 10		1	BT173	M		O					
209-39003- 11		1	BT173	M		O					
209-39003- 12		1	BT173	M		O					
209-39003- 13		1	BT173	M		O					
209-39003- 14		1	BT173	M		O					
209-39003- 15		1	BT173	M		O					
209-39003- 17		1	BT173	M		O					
209-39003- 51	78	1	BT173	M		O					
209-39003- 52	78	1	BT173								
209-39004- 1	78 - 32	1	BT187	X1							
209-39004- 2	78	1	BT187	X1							
209-39004- 3		1	BT187	M		O					
209-39004- 4		1	BT187	M		O					
209-39004- 5		1	BT187	M		O					
209-39004- 6		1	BT187	M		O					
209-39004- 7		1	BT187	M		O					
209-39004- 8		1	BT187	M		O					
209-39004- 9		1	BT187	M		O					
209-39004- 10		1	BT187	M		O					
209-39004- 11		1	BT187	M		O					
209-39004- 12		1	BT187	M		O					
209-39004- 13		1	BT187	M		O					
209-39004- 14		1	BT187								
209-39004- 15		1	BT187	M		O					
209-39004- 16		1	BT187	M		O					
209-39004- 17		1	BT187	M		O					
209-39004- 18		1	BT187								
209-39004- 19		1	BT187	M		O					
209-39004- 20		1	BT187	M		O					
209-39004- 21		1	BT187	M		O					
209-39004- 22		1	BT187	M		O					
209-39004- 23		1	BT187	M		O					
209-39004- 24		1	BT187	M		O					
209-39005	74 - 19	1	DB 33								
209-39005- 1	79 - 1 80 - 1	1	DB 33	P1	F	O	R		R	1560-534-4109	ANAA
209-39005- 2	79 80	1	DB 33	P1	F	O	R		R	1560-534-4110	ANAA
209-39005- 3		1	DB 33	M		O					
209-39005- 4		1	DB 33	M		O					
209-39005- 5		1	DB 33	M		O					
209-39005- 6		1	DB 33	M		O					
209-39005- 7		1	DB 33	M		O					
209-39005- 8		1	DB 33	M		O					
209-39005- 9		1	DB 33	M		O					
209-39005- 10		1	DB 33	M		O					
209-39005- 11		1	DB 33	M		O					
209-39005- 12		1	DB 33	M		O					
209-39005- 13		1	DB 33	M		O					
209-39005- 14		1	DB 33	M		O					
209-39005- 15		1	DB 33	M		O					
209-39005- 16		1	DB 33	M		O					
209-39005- 17		1	DB 33	M		O					
209-39005- 18		1	DB 33	M		O					
209-39005- 19		1	DB 33	M		O					
209-39005- 20		1	DB 33	M		O					
209-39005- 23		1	DB 33	M		O					
209-39005- 24		1	DB 33	M		O					
209-39005- 25		1	DB 33	M		O					
209-39005- 26		1	DB 33	M		O					
209-39005- 27		2	DB 33	M		O					
209-39005- 29		2	DB 33	M		O					
209-39005- 31		2	DB 33	M		O					
209-39005- 33		2	DB 33	M		O					
209-39005- 35		2	DB 33	M		O					
209-39005- 37		2	DB 33	M		O					
209-39005- 39		2	DB 33	M		O					
209-39005- 41		2	DB 33	M		O					
209-39005- 43		2	DB 33	M		O					
209-39005- 45		1	DB 33	M		O					
209-39005- 46		1	DB 33	M		O					
209-39005- 47		2	DB 33	M		O					
209-39005- 49		2	DB 33	M		O					
209-39005- 55		1	DB 33	M		O					
209-39005- 56		1	DB 33	M		O					
209-39005- 57		1	DB 33	M		O					
209-39005- 58		1	DB 33	M		O					
209-39005- 59		1	DB 33	M		O					
209-39005- 60		1	DB 33	M		O					
209-39005- 61		1	DB 33	M		O					
209-39005- 62		1	DB 33	M		O					
209-39005- 63		1	DB 33	M		O					
209-39005- 64		1	DB 33	M		O					
209-39005- 67		2	DB 33	M		O					
209-39005- 69		2	DB 33	M		O					
209-39005- 71		1	DB 33	M		O					
209-39005- 72		1	DB 33	M		O					
209-39005- 73		2	DB 33	M		O					
209-39005- 74		2	DB 33	M		O					
209-39005- 75		2	DB 33	M		O					
209-39005- 76		2	DB 33	M		O					
209-39005- 77		2	DB 33	M		O					
209-39005- 79		1	DB 33	M		O					
209-39005- 80		1	DB 33	M		O					
209-39005- 81		1	DB 33	M		O					
209-39005- 82		1	DB 33	M		O					
209-39005- 83		1	DB 33	M		O					
209-39005- 84		1	DB 33	M		O					
209-39005- 85		1	DB 33	M		O					
209-39005- 86		1	DB 33	M		O					
209-39005- 87		1	DB 33	M		O					
209-39005- 88		1	DB 33	M		O					
209-39005- 89		1	DB 33	M		O					
209-39005- 90		1	DB 33	M		O					
209-39006- 1	79 - 5 80 - 4	1	CY 10	M		O					
209-39006- 2	79 80	1	CY 10	X1							
209-39006- 3		1	CY 10	X1							
209-39006- 4		1	CY 10	X1							
209-39007- 3		2	BT152	X1							
209-39007- 5	78 - 36	2	BT152	X1					R	1560-031-5047	ANAA
209-39008- 1	79 - 2 80 - 2	1	CM 82	X1							
209-39008- 2	79 80	1	DM 82	X1							
209-39008- 3		1	DM 82	X1							
209-39008- 4		1	DM 82	X1							
209-39010- 1		1	BT183	X1							
209-39010- 2		1	BT183	X1							
209-39010- 3		1	BT183	X1							
209-39010- 4		1	BT183	X1							
209-39010- 5		1	BT183	M		O					
209-39010- 6		1	BT183	M		O					
209-39010- 7		1	BT183	M		O					
209-39010- 8		1	BT183	M		O					
209-39011		3	BG181								
209-39011- 1		1	BG181								
209-39011- 3		3	BG181								
209-39025- 1		1	BG182	M		O					
209-39025- 2		1	BG182	M		O					
209-39028- 1	80 - 13	1	DK186	X2							
209-39028- 2	80	1	DK186	X2							
209-39030- 1		1	BT188								
209-39030- 2		1	BT188								
209-39030- 13	78 - 62	1									
209-39037		2	BK397								
209-39038		1	BK398								
209-39039- 1		1	BK399								
209-39039- 2		1	BK399								
209-39043		1	BK400								

PART NUMBER	FIGURE AND INDEX	TOTAL QTY.	MICRO-FILM NUMBER	MAINTENANCE CODE DATA: SOURCE CODE	INST'L CAPABILITY	PRE-INST'L CAPABILITY	RECOVERABILITY	SUPPORT EQUIPMENT	FEDERAL STOCK NUMBER DATA: COGNIZANCE CODE	FEDERAL STOCK NUMBER	MFG. CODE (TSMC)
209-39044		1	BK401								
209-39045		1	BK402								
209-39095	78 - 22	1	DG146	M		O					
	198 -187										
209-39055- 3	80 - 15	1									
209-39058		1	BK403								
209-39065- 3		2	DA 41	M		O					
209-39067- 3	78 - 62	1	BV 67								
	78 - 66										
209-39068	78 - 23	2		M		O					
209-39069	78 - 24	1		M		O					
209-39069- 3		1		M		O					
209-39070	198 -145	1									
209-39070- 3	80 - 5	2		M		O					
209-39071- 1	80 - 16	1	DH225	X2							
209-39071- 2	80	1	DH225	X2							
209-39072- 1	79	1		X1							
209-39072- 2	79	1		X1							
209-39072- 11	80 - 14	1		X1							
209-39072- 12	80	1		X1							
209-39073- 1	80 - 9	1	DL303	P1	F	O	S		R	1560-569-3653	ANAA
209-39073- 2	80 - 9	1	DL303	P1	F	O	S		R	1560-569-3676	ANAA
209-39073- 5	80 - 9	1	DL303						R	1560-571-5490	ANAA
209-39073- 6	80	1	DL303						R	1560-571-5491	ANAA
209-39074- 1		1	DG287	X1							
209-39074- 2		1	DG287	X1							
209-39075- 1		1		X2							
209-39075- 2		1		X2							
209-39075- 3	80	1		M		O					
209-39075- 4	80	1		M		O					
209-39076- 1		1	DG300	X1							
209-39076- 2		1	DG300	X1							
209-39077- 1		1	DG299	M		O					
209-39077- 2		1	DG299	M		O					
209-39077- 3		1	DG299	M		O					
209-39077- 4		1	DG299	M		O					
209-39077- 5		1	DG299	M		O					
209-39077- 6		1	DG299	M		O					
209-39077- 7		1	DG299	M		O					
209-39077- 8		1	DG299	M		O					
209-39078- 1		1	DG304	X1							
209-39078- 2		1	DG304	X1							
209-39079		2	DH 30	M		O					
209-40001	PG. 1013	1	BW192	U							
209-40002	356 - 24	1	BT189	M		O					
209-40002- 3		2	BT189	M		O					
209-40002- 5		1	BT189	M		O					
209-40002- 7		1	BT189	M		O					
209-40002- 9		2	BT189	M		O					
209-40002- 11		1	BT189	M		O					
209-40010	356 - 26	1	BT182	M		O					
209-40010- 3		1	BT182	M		O					
209-40010- 5		1	BT182	M		O					
209-40010- 9		1	BT182	M		O					
209-40010- 11		1	BT182	M		O					
209-41004- 11		1							R	1560-586-4574	ANAA
209-42001	355	1	DP245	A		F					
	PG. 1013										
209-42001- 1		1	DP245								
209-42001- 11	355	1	DP245	A		F					
	PG. 1013										
209-42001-101		1	DP245								
209-42002		1	BT153	P1	F	O	S				
209-42002- 3		2	BT153	X1							
209-42002- 5		2	BT153	X1							
209-42002- 7		1	BT153	X1							
209-42002- 9		1	BT153	X1							
209-42002- 15		6	BT153	M		O					
209-42002- 21		1	BT153	X1							
209-42002- 23		4	BT153	X1							
209-42002- 27		3	BT153	X1							
209-42002- 29		1	BT153	X1							
209-42002- 33		1	BT153	X1							
209-42002- 35		1	BT153	X1							
209-42002- 37		1	BT153	X1							
209-42002- 41		1	BT153								
209-42002-101	355 - 2	1	BT153	P1	F	O	S				
	PG. 1017										
209-42002-107		1	BT153	X1							
209-42002-109		1	BT153	X1							
209-42002-121		1	BT153	X1							
209-42002-133	PG. 1017	1	BT153	X1							
209-42002-135	355	1	BT153	X1							
	PG. 1017										
209-42002-137	355	1	BT153	X1							
209-42002-139		2	BT153	X1							
209-42007- 1		1									
209-42007- 2		1									
209-42012		1	DP158								
209-42013	356 - 15	1	BG183	M		O					
209-42013- 3		1	BG183	M		O					
209-42013- 5		1	BG183	M		O					
209-42014	356 - 10	1	BK404	M		O					
209-42014- 3		1	BK404	M		O					
209-42014- 5		1	BK404	M		O					
209-42015	355 -127	2	CU 45	P1	F	O	C		R	4730-595-3803	ANAA
	PG. 1017										
	PG. 1025										
209-42016		1	DR120								
209-42017	356 - 8	1	BG185	M		O					
209-42018	356 - 9	1	BG186	M		O					
209-42019	355 -107	2	BD208	M		O					
	355 -108										
	PG. 1017										
	PG. 1025										

PART NUMBER	FIGURE AND INDEX	TOTAL QTY.	MICRO-FILM NUMBER	MAINTENANCE CODE DATA: SOURCE CODE	INST'L CAPABILITY	PRE-INST'L CAPABILITY	RECOVERABILITY	SUPPORT EQUIPMENT	FEDERAL STOCK NUMBER DATA: COGNIZANCE CODE	FEDERAL STOCK NUMBER	MFG. CODE (TSMC)
209-42020- 1	356 - 17	1	DJ206	M		O					
209-42020- 2	356	1	DJ206	M		O					
209-42020- 3		1	DJ208	M		O					
209-42020- 4		1	DJ208	M		O					
209-42020- 5		1	DJ208	M		O					
209-42020- 6		1	DJ208	M		O					
209-42020- 11		1	DJ208	M		O					
209-42020- 12		1	DJ208	M		O					
209-42021	355 -110	1	BD209	M		F					
	PG. 1025										
209-42021- 3	PG. 1025	1	BD209	M		F					
209-42022	PG. 1017	1	DM153	M		O					
	PG. 1018										
	PG. 1029										
209-42023	355 -109	1	BD210	M		O					
	PG. 1017										
	PG. 1025										
209-42024	355 -111	1	BD211	M		F					
	PG. 1017										
	PG. 1025										
209-42024- 3	PG. 1017	1	BD211	M		F					
	PG. 1025										
209-42025	PG. 1017	1	BD212	M		O					
	PG. 1025										
209-42026	355 -129	1	BD213	P	F	O	C		R	2930-031-5050	ANAA
	PG. 1017										
	PG. 1025										
209-42026- 3	PG. 1017	1	BD213	M		F					
	PG. 1029										
209-42026-129		1									
209-42027	355 -145	1	BK408	P1	F	O	C		R	2930-031-5051	ANAA
	PG. 1017										
	PG. 1025										
209-42028	355 -133	1	BD214	M		F					
	PG. 1017										
	PG. 1025										
209-42029	355	1	BE363	A		F					
	PG. 1017										
	PG. 1025										
209-42030	355 -231	1	BD215	M		F					
	PG. 1017										
	PG. 1025										
209-42031	355 - 12	4	BS109	P	F	O	C		R	1560-511-2197	ANAA
	PG. 1018										
209-42032	355 - 13	5	BS101	P	F	O	C		R	1560-532-0130	ANAA
	PG. 1018										
209-42034		1		M		O					
209-42035		1	CA233	M		O					
209-42037	355 -119	1	BK407	P	F	O	C		R	1560-031-5052	ANAA
	PG. 1017										
	PG. 1025										
209-42038	355 -120	1	BG188	P	F	O	C		R	1560-031-5053	ANAA
	PG. 1017										
	PG. 1025										
209-42039	355 -121	1	BT197	M		F					
	PG. 1017										
	PG. 1025										
209-42039- 3	355	1	BT197	M		F					
209-42039- 5	355	1	BT197	M		M					
209-42044	355 -148	1	BG189	P	F	O	C		R	2930-031-5054	ANAA
	PG. 1017										
	PG. 1025										
209-42044- 3	PG. 1017	1	BG189	M		O					
	PG. 1025										
209-42047	351 - 9	1	BT196	P	F	O	S		R	2930-031-5055	ANAA
	355 -149										
	PG. 1017										
	PG. 1025										
209-42047- 3		1	BT196	M		O					
209-42047- 5		1	BT196	M		O					
209-42047- 7		1	BT196	M		O					
209-42047- 9		1	BT196	M		O					
209-42047- 11	PG. 1017	1	BT196	M		O					
209-42051		5	AS 24								
209-42051- 3	355 - 4	4	AS 25	P	F	O	C		R	1560-569-3826	ANAA
209-42052	355 - 3	1	BK408	P	F	O	C		R	1560-569-3864	ANAA
209-42056		1	DJ209	M		O					
209-42064	355 - 29	1	BK409	P1	F	O	S		R	1560-341-4664	ANAA
	PG. 1017										
	PG. 1025										
209-42064- 3		1	BK409	X1							
209-42064- 5		1	BK409	X1							
209-42064- 7		1	BK409	X1							
209-42064- 9		1	BK409	M		O					
209-42065	355 - 16	1	BT154	X1							
	PG. 1017										
	PG. 1018										
209-42065- 3		1	BT154	X1							
209-42065- 5		1	BT154	X1							
209-42066	355	4	BG190	P	F	O	C		R	1560-569-3871	ANAA
	PG. 1015										
	PG. 1017										
	PG. 1025										
209-42068	355	1	BG 32						R	1560-694-8011	ANAA
	PG. 1017										
209-42068- 3		2	BG 32	X1					R	1560-694-8011	ANAA
209-42068- 5		2	BG 32	X1							
209-42068- 7		1	BG 32	X1							
209-42068- 9		1	BG 32	X1							
209-42068- 11		6	BG 32	M		O					
209-42068- 13		1	BG 32	X1							
209-42068- 15		4	BG 32	X1							
209-42068- 17		3	BG 32	X1							
209-42068- 19		1	BG 32	X1							
209-42068- 21	355	1	BG 32	X1							

PART NUMBER	FIGURE AND INDEX	TOTAL QTY.	MICRO-FILM NUMBER	MAINTENANCE CODE DATA: SOURCE CODE	INST'L CAPABILITY	PRI-INST'L CAPABILITY	RECOVERABILITY	SUPPORT EQUIPMENT	COGNIZANCE CODE	FEDERAL STOCK NUMBER DATA: FEDERAL STOCK NUMBER	MFG. CODE (TSMC)
	PG. 1017										
209-42068- 23	355	1	BG 32	X1							
	PG. 1017										
209-42068- 25		1	BG 32	X1							
209-42068-101	355	1	BG 32	P1	F	O	S		R	1560-508-6834	ANAA
	PG. 1017										
209-42068-107		1	BG 32	X1							
209-42068-109		1	BG 32	X1							
209-42068-113		1	BG 32	X1							
209-42068-121	355	1	BG 32								
	PG. 1018										
209-42068-123	355	1	BG 32	X1							
	PG. 1018										
209-42068-125		1	BG 32	X1							
209-42068-127		2	BG 32	X1							
209-42069	356 - 1	4	BG191	P	F	O	C		R	1560-569-3994	ANAA
	PG. 1021										
209-42070	356	5	BG192	P	F	O	C		R	1560-569-3997	ANAA
	PG. 1021										
209-42202-133	355	1									
209-42253	95 - 11	1									
209-42333- 3		1	BL354								
209-42901	PG. 1022	1	DQ150	A		F			R	1560-031-5056	ANAA
209-42901- 11	PG. 1022	1	DQ150	A		F			R	1560-346-1125	ANAA
209-42901- 21	PG. 1022	1	DQ150	A		F			R	1560-574-6068	ANAA
209-43001		1	BT186	U							
209-433207- 2	349	1									
209-43705	204 - 28	1	BD216	M		O					
209-43705- 3		1	BD216	M		O					
209-43706	204	1	DK112	A		F					
209-43708	204 - 32	1	BT200	P1	F	O	C		R	1560-031-5057	ANAA
209-43709	204 - 29	1	BD217	M		O					
209-43709- 3		1	BD217	M		O					
209-43711- 3	204 - 22	1	BG194	M		O					
209-43711- 5	204 - 21	1	BG194	M		O					
209-43714	204 - 24	1	BK410	M		O					
209-43714- 3		1	BK410	M		O					
209-43714- 5		1	BK410	M		O					
209-43714- 7		1	BK410	M		O					
209-43714- 9		1	BK410	M		O					
209-43714- 11	204	1	BK410	M		O					
209-43715	204 - 30	1	DJ210	M		O					
209-43715- 3		1	DJ210	M		O					
209-43715- 5		1	DJ210	M		O					
209-43715- 7		1	DJ210	M		O					
209-43715- 11	204	1	DJ210	M		O					
209-43727	204 - 45	1	BG195	M		O					
209-43802- 47	94 -138	1									
209-46002- 37		1									
209-46117- 2		1									
209-463132		1									
209-47002	355 - 74	1	BT162	P1	F	O	S		R	1560-031-5058	ANAA
	PG. 1018										
	PG. 1025										
209-47002- 3		1	BT162	X1							
209-47002- 5		1	BT162	X1							
209-47002- 7		1	BT162	X1							
209-47002- 9		1	BT162	X1							
209-47002- 11		1	BT162	X1							
209-47002- 13		1	BT162	X1							
209-47003	356 - 2	1	BT194	P1	F	O	R		R	1560-031-5059	ANAA
	PG. 1021										
209-47003- 3		1	BT194	X1							
209-47003- 5		1	BT194	X1							
209-47004	356 - 22	1	BT175	M		O					
209-47004- 3		1	BT175	M		O					
209-47004- 5		1	BT175	M		O					
209-47004- 7		1	BT175	M		O					
209-47004- 9		1	BT175	M		O					
209-47005	356 - 23	1	BT164	M		O					
209-47005- 3		1	BT164	M		O					
209-47005- 5		1	BT164	M		O					
209-47005- 7		1	BT164	M		O					
209-47005- 9		1	BT164	M		O					
209-47006	355	1	DP 81	U							
	PG. 1018										
	PG. 1021										
209-4701- 19		1	DR121	M		O					
209-47013		1	DJ 66	M		O					
209-47013- 3		1	DJ 66	M		O					
209-47013- 5		1	DJ 66	M		O					
209-47022	355 -210	1	DP159	M		O					
	PG. 1018										
	PG. 1024										
209-47023		1	DM241	M		O					
209-47024	355 -147	1	DM134	M		O					
	PG. 1017										
	PG. 1018										
	PG. 1025										
209-47311		1									
209-47664- 2	115 - 22	1	BV 74								
209-47801- 19	355 - 73	1									
	PG. 1018										
	PG. 1025										
209-47801- 21	PG. 1018	1	DR121	M		O					
	PG. 1025										
209-47801- 23	355 - 47	1	DR121	M		O					
	PG. 1018										
	PG. 1026										
209-47801- 25	PG. 1018	1	DR121	M		O					
	PG. 1026										
209-47801- 27	355 -232	1	DR121	M		O					
	PG. 1018										
	PG. 1026										
209-47801- 29	PG. 1018	1	DR121	M		O					

PART NUMBER	FIGURE AND INDEX	TOTAL QTY.	MICRO-FILM NUMBER	MAINTENANCE CODE DATA: SOURCE CODE	INST'L CAPABILITY	PRI-INST'L CAPABILITY	RECOVERABILITY	SUPPORT EQUIPMENT	COGNIZANCE CODE	FEDERAL STOCK NUMBER DATA: FEDERAL STOCK NUMBER	MFG. CODE (TSMC)
209-47801- 31	PG. 1018	1	DR121	M		F					
209-47801- 33	PG. 1018	1	DR121	M		F					
209-478307	PG. 1026	1									
209-48001		1	BT172	U							
209-48002	113 - 1	1	CB249	P1	F	O	R		R	1560-031-5064	ANAA
209-48002- 3		1	CB249	X1							
209-48002- 5		2	CB249	M		O					
209-48002- 7		2	CB249	M		O					
209-48002- 9		2	CB249	M		O					
209-48002- 11		1	CB249	M		O					
209-48002- 13		1	CB249	M		O					
209-48002- 15		1	CB249	M		O					
209-48002- 17		2	CB249	M		O					
209-48002- 19		1	CB249	M		O					
209-48002- 21		1	CB249	M		O					
209-48002- 23		1	CB249	M		O					
209-48002- 25		1	CB249	M		O					
209-48002- 27		77	CB249	M		O					
209-48002- 29		1	CB249	M		O					
209-48002- 31		20	CB249	M		O					
209-48002- 33		4	CB249	M		O					
209-48002- 39		1	CB249	M		O					
209-48002- 43		3	CB249	M		O					
209-48002- 45		1	CB249	M		O					
209-48002- 46		1	CB249	M		O					
209-48002- 50		3	CB249	M		O					
209-48002- 54		1	CB249	M		O					
209-48002- 58		2	CB249	M		O					
209-48002- 66		1	CB249	M		O					
209-48002- 82		1	CB249	M		O					
209-48002- 85		1	CB249	M		O					
209-48002- 93		2	CB249	X1							
209-48002- 95		1	CB249	M		O					
209-48002- 97		1	CB249	M		O					
209-48002- 99		1	CB249	M		O					
209-48002-101	113	1	CB249	P1	F	O	R		R	1560-323-4154	ANAA
209-48002-103		1	CB249	M		O					
209-48002-201	113 - 1	1	CB249	P1	F	O	R		R	1560-694-8012	ANAA
209-48002-203		1	CB249	M		O					
209-48002-301	113	1	CB249	P1	F	O	R		R	1560-508-6839	ANAA
209-48002-303		1	CB249	M		O					
209-48002-401	113	1	CB249	P1	F	O	R		R	1560-511-2203	ANAA
209-48002-403		1	CB249	M		O					
209-48003	113	1	BT176	P1	F	O	C		R	1560-031-5065	ANAA
209-48003- 3		1	BT176	X1							
209-48003- 5		20	BT176	M		O					
209-48003- 7		8	BT176	M		O					
209-48003- 9		1	BT176	M		O					
209-48003- 11		2	BT176	M		O					
209-48003- 21		1	BT176	X1							
209-48003- 30		1	BT176	X1							
209-48003- 34		2	BT176	X1							
209-48003- 54		2	BT176	X1							
209-48003- 62		1	BT176	X1							
209-48003- 86		2	BT176	X1							
209-48003- 87		4	BT176	X1							
209-48003- 91		1	BT176	M		O					
209-48003-101	113	1	BT176	P1	F	O	R		R	1560-694-8014	ANAA
209-48003-500		1	BT176	X1							
209-48013- 1		1	BT157								
209-48013- 2		1	BT157								
209-48014- 1	357	1	BS 76	U							
209-48014- 2	357	1	BS 76	U							
209-48015- 1	357	1	BT180	U							
209-48015- 2	357	1	BT180	U							
209-48023- 1		1	BT158	U							
209-48023- 2		1	BT158	U							
209-48024- 1	357	1	CX142	U							
209-48024- 2	357	1	CX142	U							
209-48027		1	BS 61	U							
209-48028		1	DP 26	U							
209-48029		1	BS 46	U							
209-48029- 3		2	BS 46	M		F					
209-48029- 5		1	BS 46	M		F					
209-48031		1	BT195	U							
209-48032		1	DJ264	U							
209-48032- 11		1	DJ264	U							
209-48032- 21		1	DJ264	U							
209-48035- 11		1	BJ113								
209-48035- 12		1	BJ113								
209-48037		1	DS 37	U							
209-48038		1		U							
209-48039		1	DJ122	U							
209-48039- 3		2	DJ122	M		F					
209-48039- 5		1	DJ122	M		F					
209-48043- 1		1		U							
209-48043- 2		1		U							
209-48044- 1	357	1	DP 22	U							
209-48044- 2	357	1	DP 22	U							
209-48045	100 -111	16		P1	O	O	C		R	4730-569-4009	ANAA
209-48046	100 -110	4		P1	O	O	C		R	4730-570-2268	ANAA
209-48047	100 -113	4		P1	O	O	S		R	4730-570-2269	ANAA
209-48050		1	BS116								
209-48051		1	BX235	M		O					
209-48052	107	1	DQ100	M		O					
	108										
209-48052- 3		1	DQ100	M		O					
209-48052- 5		1	DQ100	M		O					
209-48054	100 - 20	1		P1	F	O	S		R	1560-511-2205	ANAA
	101 - 33										
209-48055	100 - 29	1		P1	F	O	S		R	1560-511-2206	ANAA
	101 - 34										
	103 -165										
209-48056	108 - 28	1	DJ 38	M		O					
209-48056- 3		1	DJ 38	M		O					

PART NUMBER	FIGURE AND INDEX	TOTAL QTY.	MICRO-FILM NUMBER	MAINTENANCE CODE DATA: SOURCE CODE	INSTL CAPABILITY	PRE-INSTL CAPABILITY	RECOVERABILITY	SUPPORT EQUIPMENT	FEDERAL STOCK NUMBER DATA: COGNIZANCE CODE	FEDERAL STOCK NUMBER	MFG. CODE (TSMC)
209-48056- 5		2	DJ 38	M		0					
209-48076		1	BU212	M		0					
	96 - 10	1									
209-48077	104 - 54	1									
	103 - 64										
	111										
209-48101	102 - 68	1	CU266	P1	F	0	S				
209-48101- 3	102 - 68	1	CU266	P1	F	0	S		R	1560-694-8015	ANAA
209-48102	99 - 23	1	DH138	A		F					
	102 - 67										
209-48102-101	99 - 23	1	CU255	A		F					
	102 - 67										
209-48103	112	2	DG230	P1	F	0	S		R	2910-031-5066	ANAA
209-48103- 11	112	1	DG230						R	1560-571-5492	ANAA
209-48104	112 - 46	2	BK415	X1							
209-48105	112 - 41	2	DG231	X1							
209-48105- 11	112	2	DG231	X1							
209-48106- 5	112 - 44	2	BD218	P	F	0	C		R	1560-634-7563	ANAA
209-48107		2									
209-48107- 3		2									
209-48107- 5		2									
209-48108	112 - 12	4	CU 53	M		0					
209-48110		4	CU270								
209-48110- 3	112 - 7	2	CU220	P1	0	0	S		R	1560-305-4134	ANAA
209-48101		1	BV 55								
209-481102	102 - 16	1	BV 56	A		F			R	1560-346-1176	ANAA
	103 - 12										
	171										
209-481102- 11	121	1									
209-481102- 21	101 - 25	1									
	121										
209-481103- 3	121 - 42	1	CA 83	X1							
209-481103- 11	121	1	CA 83	X2							
209-481104	121 - 28	1	BT155	P1					R	1560-346-1127	ANAA
209-481105- 3		1	CA 84	M		0					
209-481105- 5		1	CA 84	M		0					
209-481105- 7		1	CA 84	M		0					
209-481105- 9		1	CA 84	M		0					
209-481105- 13		1	CA 84	M		0					
209-481105- 17		1	CA 84	M		0					
209-481105- 19		1	CA 84	M		0					
209-481105- 21	121 - 4	1	CA 84	M		0					
209-481105- 23		1	CA 84	M		0					
209-481105- 27		2	CA 84	M		0					
209-481105- 31	121 - 2	1	CA 84								
209-481105- 33		1	CA 84	M		0					
209-481105- 35		1	CA 84	M		0					
209-481106- 7		1	CA 77								
209-481106- 21	121 - 31	1	CA 77	M		0					
209-481107	121 - 41	2	BG198	M		0					
209-481107- 3		1	BG198	M		0					
209-481108	121 - 9	1	BG199								
209-481108- 3		1	BG199								
209-481111- 3		2									
209-481115	101 - 30	1	BK419	A		F					
	102 - 20										
209-481115- 3		1	BK419	M		0					
209-481115- 5		1	BK419	M		0					
209-481116	101 - 29	1	OH 8	A		F					
	102 - 19										
209-481117- 3		1	DG233	P1	F	0	S		R	1560-511-2218	ANAA
209-481118	100 -164	1									
209-481119	100 -220	1		P1	F	0	S		R	2915-511-3470	ANAA
	106										
209-48112	99 - 46	1	BK418	P1	F	0	S		R	1560-343-9130	ANAA
209-48112- 3	121	1									
209-481122	121 - 29	1									
209-48113	99 - 20	1	CU275	M		0					
209-48113- 3		1	CU275	M		0					
209-48113- 5		1	CU275	M		0					
209-48113- 11		1	CU275	M		0					
209-48114- 1		1	BD219	M		0					
209-48114- 2		1	BD219	M		0					
209-48115		1		M		0					
209-48115- 3		1		M		0					
209-48116		1	BG201	M		0					
209-48116- 3		1	BG201	M		0					
209-48117- 1	102 - 89	1	CA178	A		F					
	103										
209-48117- 2	102 -116	1	CA178	A		F					
	103										
209-48118	98 - 85	1		A		F			R	1560-510-1134	ANAA
	99										
	100										
209-48119- 1	117	1	DD204	P1	F	0	S		R	2910-037-2602	ANAA
209-48119- 2	117	1	DD204	P1	F	0	S		R	2910-037-2603	ANAA
209-48119- 11	112	1	DD204						R	1560-571-5493	ANAA
209-48119- 12	112	1	DD204						R	1560-571-5494	ANAA
209-48120- 1	112 - 18	1	DD205	X1							
209-48120- 2	112	1	DD205	X1							
209-48121	112 - 15	2	CZ 93	P1	F	0	S		R	1560-532-0133	ANAA
209-48121- 2		1	CZ 93								
209-48123	99 - 75	12	CU 83	M		0					
	100 - 97										
	100 -100										
	101 - 88										
	102 - 64										
	103 - 50										
209-48124	102 -101	8	CU 77	M		0					
	103 - 46										
209-48125- 3		1	CU218	M		0					
209-48125- 11	99 - 22	1	CU218	M		0					
	102 - 15										
209-48126	99 - 21	2	DR122	M		0					
	100 - 14										
	100 - 37										
	101 - 23										
	102 - 14										
	103 - 10										
209-48126- 3		2	DR122	M		0					
209-48126- 5		2	DR122	M		0					
209-48128		2	BD222	M		0					
209-48129	98 - 26	1	BL235	A		F					
	107										
	108										
209-48129- 11	98 - 21	1	BL235	A		F					
	100 - 50										
	107										
	108										
209-48131	107 - 18	1	BV291	P1	F	0	S		R	2910-031-5067	ANAA
209-48132- 2	96	1									
209-48133- 1	96	1	BG 56	A		F					
209-48133- 7		1	BG 56	A		F					
209-48134- 1	96 - 29	1	BS 92	P1	F	0	S		R	2910-037-2604	ANAA
209-48134- 2	96	1	BS 92	P1	F	0	S		R	2910-037-2605	ANAA
209-48135	101 - 55	2	CU279	M		0					
	101 - 58										
	102 - 33										
	103 - 17										
	103 - 20										
209-48135- 3		2	CU279	M		0					
209-48135- 5		2	CU279	M		0					
209-48135- 6		2	CU279	M		0					
209-48135- 7		2	CU279	M		0					
209-48136- 1	93 - 65	1	BT174	P1	F	0	S		R	2910-037-2606	ANAA
	94 - 65										
	95 - 93										
	97 - 96										
209-48136- 2	93	1	BT174	P1	F	0	S		R	2910-037-2607	ANAA
	94										
	95 - 94										
	97 - 97										
209-48139- 1		1	BK428	M		0					
209-48139- 2		1	BK428	M		0					
209-48139- 3		1	BK428	M		0					
209-48139- 4		1	BK428	M		0					
209-48140- 1	112 - 4	1	CU259	M		0					
209-48140- 2	112	1	CU259	M		0					
209-48140- 3		2	CU259	M		0					
209-48140- 5		1	CU259	M		0					
209-48140- 6		1	CU259	M		0					
209-48140- 9		2	CU259	M		0					
209-48140- 11		1	CU259	M		0					
209-48140- 12		1	CU259	M		0					
209-48141		6									
209-48142		1									
209-48143		2	CU 75	M		0					
209-48144		2	CU 76	M		0					
209-48145- 1		2	DL263	M		0					
209-48145- 2		2	CU 78	M		0					
209-48146	112 - 25	4	BD226	M		0					
209-48147	112 - 42	4	BD227	M		0					
209-48148	112 - 47	4	BD228	M		0					
209-48148- 1		1	BD228	A		F					
209-48149	112 - 20	4	DG183	P	F	0	C		R	1560-569-4082	ANAA
209-48150	112 - 53	2	BK429	P1	F	0	S		R	4730-031-5068	ANAA
209-48151	99 - 68	1	BK430	P1	F	0	S		R	1560-343-9131	ANAA
	100 - 84										
	100 -148										
	101 - 81										
	102 - 57										
	103 - 39										
209-48152	102 -100	2	CU 43	P1	0	0	S		R	4730-570-2270	ANAA
	103 - 45										
209-48153	102 -103	1	CU 52	P1	0	0	S		R	4730-570-2271	ANAA
	103 - 48										
209-48154	99 - 74	1	CU258	P1	0	0	S		R	4730-570-2272	ANAA
	100 - 96										
	101 - 87										
	102 - 63										
	103 - 49										
209-48155	99 - 77	1	CU219	P1	0	0	S		R	4730-570-2273	ANAA
	100 - 99										
	100 -101										
	101 - 90										
	102 - 66										
	103 - 52										
209-48158	107 - 23	1	BK433	P1	F	0	S		R	2910-031-5069	ANAA
	108 - 20										
209-48159- 1	102 - 93	1	CA169	P1	F	0	S		R	1560-697-8474	ANAA
	103 - 81										
209-48159- 2	102 -120	1	CA169	P1	F	0	S		R	1560-697-8425	ANAA
	103 -128										
209-48160	102 - 37	1	CU295	M		0					
209-48160- 5		1	CU295	M		0					
209-48160- 6		1	CU295	M		0					
209-48160- 7		1	CU295	M		0					
209-48160- 9		1	CU295	M		0					
209-48161	98 - 41	2	BK435	P1	F	0	S		R	2910-037-2608	ANAA
209-48167	98 - 13	2	BT166	M		0					
209-48167- 3		2	BT166	M		0					
209-48167- 5		2	BT166	M		0					
209-48168	23 - 85	1	DK143	M		0					
209-48168- 3		1	DK143	M		0					
209-48168- 5		1	DK143								
209-48168- 7		1	DK143								
209-48169- 1	98 -101	1	CP 26	X2							
209-48169- 2	99 -152	1	CP 26	X2							
209-48169- 12	106 - 1	1	CP 26	X2							
209-48170	98 - 24	1	BT181	A		F					

PART NUMBER	FIGURE AND INDEX	TOTAL QTY.	MICRO-FILM NUMBER	MAINTENANCE CODE DATA: SOURCE CODE	INSTL CAPABILITY	PRE-INSTL CAPABILITY	RECOVERABILITY	SUPPORT EQUIPMENT	FEDERAL STOCK NUMBER DATA: COGNIZANCE CODE	FEDERAL STOCK NUMBER	MFG. CODE (TSMC)
	99 - 31										
	100 - 49										
209-48170- 3		1	BT181	M		O					
209-48170- 5		1	BT181	M		O					
209-48170- 7		1	BT181	M		O					
209-48170- 9		1	BT181	M		O					
209-48170- 11		1	BT181	M		O					
209-48171- 1	99 - 90	1	BS 60	X1					R	1560-511-2696	ANAA
	100 -158										
209-48171- 2	98	1	BS 60	X1							
	99 -139										
	106 - 10										
209-48172- 1	98	1	BS 59	P1	F	O	S		R	1560-511-2697	ANAA
209-48172- 2	98 -122	1	BS 59	P1	F	O	S		R	1560-570-2274	ANAA
	99										
209-48172- 3		1	BS 59	M		O					
209-48172- 5		2	BS 59	M		O					
209-48172- 7		1	BS 59	M		O					
209-48172- 9		1	BS 59	M		O					
209-48172- 11	98	1	BS 59	P1	F	O	S				
209-48172- 21	98	1	BS 59	P1	F	O	S		R	1560-570-2275	ANAA
	99										
209-48173- 1	98 - 98	1	BS 68	P1	F	O	S		R	1560-305-4135	ANAA
209-48173- 2	98 -105	1	BS 68	P1	F	O	S		R	1560-305-4136	ANAA
	99										
209-48173- 12	98 -105	1	BS 68	P1	F	O	S		R	2915-570-2363	ANAA
	99										
209-48174	107 - 5	1	BG208	M		O					
209-48174- 3		1	BG208	M		O					
209-48174- 5		1	BG208	M		O					
209-48175	98 - 91	2	BS117	P	F	O	C		R	4730-511-2221	ANAA
	98 -114										
	99 -124										
	99 -144										
	100 -154										
	106 - 14										
209-48176	98 - 94	2	BS 68	P1	F	O	C		R	1500-C00-2284	ANAA
	98 -117										
	99 -127										
	99 -147										
	100 -157										
	106 - 11										
209-48176- 3		2	BS 88	X1							
209-48176- 5		2	BS 88	X1							
209-48176- 7		2	BS 88	X1							
209-48177	98 - 93	2	BS118	P	F	O	C		R	1560-530-8399	ANAA
	98 -116										
	99 -126										
	99 -146										
	100 -156										
	106 - 12										
209-48178	109 - 4	2	BG209	P1	F	O	C		R	1560-544-8552	ANAA
209-48179- 1		1	BK436	X1							
209-48179- 2		1	BK436	X1							
209-48180	23 - 63	2	BD231	M		O					
209-48181- 1	109 - 5	1	BG210	P1	F	O	S		R	1560-305-4137	ANAA
209-48181- 2	109	1	BG210	P1	F	O	S		R	1560-305-4138	ANAA
209-48181- 3		1	BG210	M		O					
209-48181- 4		1	BG210	M		O					
209-48182		1	BG211	M		O					
209-48183		1		M		O					
209-48184	107 - 33	1		M		O					
	108										
209-48184- 3		1		M		O					
209-48184- 5		1		M		O					
209-48184- 7		1		M		O					
209-48184- 19		1		M		O					
209-48184- 23		1		M		O					
209-48184- 25		1		M		O					
209-48184- 31	107 - 34	1		M		O					
	108 - 27										
209-48184- 41	107 - 33	1		M		O					
	107 - 34										
	108										
209-48185		2	BD235	M		O					
209-48186- 1	112 - 2	1	CU270	M		O					
209-48186- 2	112	1	CU270	M		O					
209-48186- 3		1	CU270	M		O					
209-48186- 4		1	CU270	M		O					
209-48186- 5		2	CU270	M		O					
209-48186- 7		2	CU270	M		O					
209-48186- 9		2	CU270	M		O					
209-48187- 1	112 - 1	1	CU280	M		O					
209-48187- 2	112	1	CU280	M		O					
209-48187- 3		2	CU280	M		O					
209-48187- 5		1	CU280	M		O					
209-48187- 6		1	CU280	M		O					
209-48187- 7		2	CU280	M		O					
209-48188- 1		1	CU 49	M		O					
209-48188- 2		1	CU 49	M		O					
209-48189- 1		1	CU 44	M		O					
209-48189- 2		1	CU 44	M		O					
209-48190- 1		1	BD236	M		O					
209-48190- 2		1	BD236	M		O					
209-48191- 1		1	BD237	M		O					
209-48191- 2		1	BD237	M		O					
209-48192- 1	98 - 47	1	CU254	P1	F	O	S		R	1560-323-4155	ANAA
	99										
209-48192- 2	98	1	CU254	P1	F	O	S		R	1560-323-4156	ANAA
	99 - 52										
209-48192- 3		1	CU254	X1							
209-48192- 4		1	CU254	X1							
209-48192- 7		2	CU254	X1							
209-48193	98 - 48	2	CU 68	P	F	O	C		R	5310-550-1264	ANAA
	99 - 53										
209-48194	98 - 50	2	CU 54	P	F	O	C		R	1560-562-4917	ANAA
	99 - 55										
209-48194- 11	98 - 50	2	CU 54	P	F	O	C		R	1560-534-4111	ANAA
	99 - 55										
	99 - 55										
209-48195	107 - 35	1	BD239	M		O					
209-48195- 3		1	BD239	M		O					
209-48195- 5		2	BD239	M		O					
209-48196- 1	102 - 34	1	BT171	M		O					
209-48196- 2	102 - 38	1	BT171	M		O					
209-48197	96 - 4	1	BU 47	M		O					
209-48197- 3		1	BU 47	M		O					
209-48197- 5		1	BU 47	M		O					
209-48198	98 -102	1	CP 15	P1	F	O	S		R	1560-698-8428	ANAA
	99 -131										
209-48198- 11	100 -170	1	CP 15	P1	F	O	S		R	1560-511-2231	ANAA
209-48206	96 - 1	1	BT170	A		F					
209-48206- 11	98 - 1	1	BT170	A		F					
	99 - 1										
209-48206	110										
209-48206- 11	100 - 1										
	100 - 2										
	101 - 1										
	102 - 1										
	103 - 1										
	110										
209-48206- 21	96 - 1	1	BT170	A		F					
	110										
209-48206- 31	99 - 1	1	BT170								
	100 - 1										
	100 - 2										
	101 - 1										
	102 - 1										
	103 - 1										
	110										
209-48207	110 - 1	1	BT178	X2							
209-48207- 11	110	1	BT178	X2							
209-48208	96 - 6	1	BK438	P1	F	O	S		R	2910-031-5070	ANAA
	102 - 24										
209-48208- 31		1									
209-48209	113 - 10	1	BG215	M		O					
209-482105	341 - 6	4	BD241	M		O			R	1680-609-3144	B210
209-482106	338 - 92	2	BG216	P1	F	O	S		R	1560-508-6836	ANAA
	339 - 34										
209-482107	338 - 93	2	CB259	P1	F	O	S		R	1560-508-6837	ANAA
	339 - 35										
209-482107- 3		2	CB259	M		O					
209-482107- 5		2	CB259	M		O					
209-482108	338	1	BD242	A		F					
	339										
209-482109	95 -187	1		M		O					
	97 -204										
209-48211	93	1	DG234	M		O					
	100 - 19										
	101 - 13										
	103 - 4										
209-48211- 5		1	DG234	M		O					
209-482110- 3		1		M		O					
209-482110- 5		1		M		O					
209-482111	100 - 24	1	DS 43	M		O					
	101 - 12										
209-482111- 3		1	DS 49	M		O					
209-482111- 5		1	DS 43	M		O					
209-482111- 7		1	DS 43	M		O					
209-482111- 9		1	DS 43	M		O					
209-482111- 21		1	DS 43	M		O					
209-482112	334 - 56	1									
209-482113- 1	334 - 61	1									
209-482113- 2	334	1									
209-482113- 3	334	1									
209-482113- 4	334	1									
209-482114	334 -117	1									
209-482115		1	DG236								
209-482116	103 - 66	1	DH226								
209-482117		1	DQ186								
209-482117- 1	334 -215	1									
209-482117- 2	334 -216	1									
209-482118	334 -217	1									
209-48212	93 - 28	1	DQ101	M		O					
	94 - 22										
	95 - 26										
	97 - 20										
	108 - 7										
	107	1		M		O					
209-482120- 3		1		M		O					
209-482120- 5		1		M		O					
209-482121		1	DR124								
209-482122		1	DR174								
209-482124		1		M		O					
209-48213	69 - 21	4	BD243	M		O					
	69 - 32										
	113 - 17										
209-48214- 3	341 - 20	2	BS119	M		O					
209-48215	96 - 35	1	DS 48	P1	F	O	S		R	2910-031-5071	ANAA
	98 - 27										
	99 -118										
	100 - 43										
	102 -128										
	113 - 30										
209-48215- 1		1	BT199								
209-48215- 11	96	1	BT199	X1							
209-48216		1	BG219	M		O					
209-48218	341 - 18	2	BY 79	X1							
209-48218- 13	341 - 14	2	BY 79	X1					R	1680-609-4327	B210
209-48219	341 - 13	2	DL257	X1							

PART NUMBER	FIGURE AND INDEX	TOTAL QTY.	MICRO-FILM NUMBER	MAINTENANCE CODE DATA: SOURCE CODE	INSTL CAPABILITY	PRE-INSTL CAPABILITY	RECOVERABILITY	SUPPORT EQUIPMENT	FEDERAL STOCK NUMBER DATA: COGNIZANCE CODE	FEDERAL STOCK NUMBER	MFG. CODE (TSMC)
209-48219- 13	341 - 13	2	DL237	X1					R	1680-609-4328	8210
209-48221- 3		1	BU 33	M		O					
209-48221- 11	104 - 13	1									
209-48221- 13		1	BU 33	M		O					
209-48222	99 - 62	1		P1	F	O	S		R	1560-569-2486	ANAA
	100 -143										
	101 - 75										
	102 - 51										
	103 - 33										
209-48223	104 - 15	1									
	105 - 24										
209-48223- 3		1	BS 67								
209-48224	104 - 19	1									
	105 - 28										
209-48225	104 - 20	1									
	105 - 29										
209-48226	104 - 42	1									
	105 - 51										
209-48226- 3		1	DR123								
209-48226- 17		1	DR123	M		O					
209-48227		2	BV 29	A		C					
209-48227- 5		AR	BV 29	M		O					
209-48227- 7	341	1	BV 29								
209-48227- 9	341	1									
209-48227- 11	338 - 78	1									
	339 - 42	1	BV 29	P1	F	O	S		R	1560-535-5531	ANAA
	341										
209-48227- 21	339	2	BV 29	P1	F	O	S		R	1560-600-3783	ANAA
	341										
209-48227- 31	338	1									
	341										
209-48227- 41	339										
	341										
209-48228	341 - 44	2	BT191	X1							
209-48229	341 - 2	2	BT179	X1							
209-48230- 3		2	DP276	X2							
209-48230- 7	341 - 26	1	DP276	XZ							
209-48230- 9		1	DP276	M		O					
209-48230- 11		1	DP276	M		O					
209-48230- 13		1	DP276	M		O					
209-48231	341	2	BG222	M		O					
209-48232	341 - 39	2	BD245	M		O			R	1680-609-3129	8210
209-48232- 3	341	1	BD245						R	1680-627-8444	8210
209-48233	104 - 44	1									
	105 - 53										
	111 - 25										
209-48234	104 - 47	1									
	105 - 57										
209-48236	95	2	BG223	M		O					
	97										
209-48237	95 - 42	1	BK445	P1	F	O	C		R	2910-031-5074	ANAA
	97 - 37										
209-48238	95 - 43	2	BG224	M		O					
	97 - 38										
209-48239	95 -146	1	BK446								
	97										
209-48240	95 -149	1	BK447	P1	F	O	S		R	2910-031-5075	ANAA
	97 -147										
209-48241	95 -145	1	BF476	M		O					
	97 -152										
209-48244- 3	341 - 22	2	BV 18	X2							
209-48244- 7	341 - 22	2	BV 18	X2							
209-48245	341 - 5	2	BD246	M		O					
209-48246	111 - 26	1	CB 27	M		O					
209-48246- 3		1	CB 27	M		O					
209-48246- 5		1	CB 27	M		O					
209-48248	93 - 41	1	BG226	M		O					
209-48248- 3		1	BG226	M		O					
209-48250	93	2	BD247	M		O					
	94										
	95										
	97										
209-48251	93 - 1	1	DP 29	A1							
	95										
209-48251- 11	93 - 2	1	DP 29	A1							
	94										
	95										
	97										
209-48251- 21	93 - 3	1	DP 29	A		F					
	94										
	95										
	97										
209-48252	93 - 5	1	BV129	P1	F	O	S		R	2910-031-5076	ANAA
209-48252- 3	93 - 8	1	BV129	P1	F	O	S		R	1560-336-7720	ANAA
	94 - 1										
	94 - 2										
	95 - 6										
	97 - 1										
209-48253	94 - 7	1	BV114	P1	F	O	S		R	2910-031-5077	ANAA
	97 - 6										
209-48254	93 - 30	1	BD248	M		O					
	94 - 26										
	95 - 28										
	97 - 22										
209-48254- 3		1	BD248	M		O					
209-48255	99 - 5	1	BK449	M		O					
	100 - 6										
	101 - 18										
	103 -145										
209-48255- 3		1	BK449	M		O					
209-48255- 5		1	BK449	M		O					
209-48255- 7		1	BK449	M		O					
209-48256	93 - 13	1	DN 41	M		O					
	101 - 54										
	102 - 32										

PART NUMBER	FIGURE AND INDEX	TOTAL QTY.	MICRO-FILM NUMBER	MAINTENANCE CODE DATA: SOURCE CODE	INSTL CAPABILITY	PRE-INSTL CAPABILITY	RECOVERABILITY	SUPPORT EQUIPMENT	FEDERAL STOCK NUMBER DATA: COGNIZANCE CODE	FEDERAL STOCK NUMBER	MFG. CODE (TSMC)
209-48256- 1		1	DN 41								
209-48256- 2	101 - 57	1	DN 41	M		O					
	103 - 19										
209-48256- 3		1	DN 41	M		O					
209-48256- 4		1	DN 41	M		O					
209-48256- 7		1	DN 41	M		O					
209-48256- 11		1	DN 41	M		O					
209-48256- 12		1	DN 41	M		O					
209-48256- 21		1	DN 41	M		O					
209-48256- 31	101 - 54	1	DN 41	M		O					
	102 - 32										
	103 - 16										
209-48257	99 - 40	1	BK451	P1	F	O	S		R	1560-333-7884	ANAA
209-48258	95 - 74	1	BV132	M		O					
	97 - 76										
209-48258- 11		1	BV132	M		O					
209-48258- 13		1	BV132	M		O					
209-48258- 15		1	BV132	M		O					
209-48258- 17		1	BV132	M		O					
209-48258- 19		1	BV132	M		O					
209-48259	95 -167	1	BK452	P	F	O	C		R	1560-511-2238	ANAA
	97 -163										
209-48259- 3		1	BK452	M		O					
209-48259- 5		1	BK452	M		O					
209-48259- 7		1	BK452	M		O					
209-48259- 9		1	BK452	M		O					
209-48259- 11		1	BK452	M		O					
209-48259- 13		1	BK452	M		O					
209-48260	99 - 19	1	BL 22	A		F					
209-48261- 1		4	DN291	M		O					
209-48261- 2		4	DN291	M		O					
209-48262	95 -157	1	DN 42	P1	F	O	S		R	2910-031-5078	ANAA
	97 -158										
209-48263- 1		3	BD249	M		O					
209-48263- 2		3	BD249	M		O					
209-48264	95 -109	1	BL 24	P1	F	O	S		R	2910-031-5079	ANAA
	97 -111										
209-48265	338 - 77	2		M		O					
	339 - 39										
209-48266	341 - 7	2	BD250	M		O					
209-48268	341 - 19	2	BD251	M		O					
209-48271	338 - 73	1	BD252	M		O					
	339 - 77										
209-48274		2	BV 33	X2							
209-48274- 13	341 - 15	2	BV 33	X2					R	1680-609-4388	8210
209-48274- 15	341 - 15	1	BV 33								
209-48275	111 - 15	1	BL 25	P1	F	O	S		R	4730-569-4179	ANAA
209-48279		36	BD253	M		O					
209-48280	95 - 49	1	DJ112	P1	F	O	S		R	2910-037-2609	ANAA
	97 - 46										
209-48280- 3		1	DJ112	M		O					
209-48280- 5		1	DJ112								
209-48280- 7		1	DJ112	M		O					
209-48280- 9		1	DJ112	M		O					
209-48280- 11		1	DJ112	M		O					
209-48283	99	1	BL 27	A		F					
	100 -136										
	101 - 69										
	102 - 45										
	103										
209-48284		18	BD254	M		O					
209-48285	104	1									
	105 - 43										
209-48287	96 - 7	2	BL 29	M		O					
	102 - 36										
209-48287- 3		2	BL 29	M		O					
209-48289	102 - 27	1	BG228	M		O					
209-48289- 3		1	BG228	M		O					
209-48289- 11		1	BG228	M		O					
209-48290	96 - 57	1	BL 30	M		O					
	102 -159										
	103 - 53										
209-48291	96 - 8	1	DS 92	M		O					
	101 - 60										
	102 - 40										
209-48291- 3		1	DS 92	M		O					
209-48292	104 - 9	1									
	105 - 10										
209-48295	96 - 61	1	BV119	M		O					
	101 - 9										
	102 - 5										
	103 - 2										
209-48295- 3		1	BV119	M		O					
209-48295- 7		1	BV119	M		O					
209-48295- 8		1	BV119	M		O					
209-48296		1	DS 51	X1							
209-48297	96 - 13	1	DH282	A		O					
	101 - 68										
	102 - 43										
	103 - 25										
209-48297- 3		1	BL 32	M		O					
209-48297- 4		1	BL 32	M		O					
209-48298- 5		1	DH 75	M		O					
209-48298- 11	111 - 37	1	DH 75	M		O					
209-48299	111 - 46	1	BG 23	M		O					
209-48299- 3		1	BG 23	M		O					
209-48300	111 - 33	1	BG231	M		O					
209-48305- 5		1	DN126	X1							
209-48305- 6		1	DN126	X1							
209-48305- 11	119 - 33	1	DN126	P1	F	O	S		R	1560-594-7149	ANAA
209-48305- 12	119	1	DN126	P1	F	O	S		R	1560-594-7150	ANAA
209-48307	104 - 55	1									
	105 - 65										
	355 -233										
	PG. 1019										

PART NUMBER	FIGURE AND INDEX	TOTAL QTY.	MICRO-FILM NUMBER	MAINTENANCE CODE DATA: SOURCE CODE	INST'L CAPABILITY	PRE-INST'L CAPABILITY	RECOVERABILITY	SUPPORT EQUIPMENT	COGNIZANCE CODE	FEDERAL STOCK NUMBER DATA: FEDERAL STOCK NUMBER	MFG. CODE (TSMC)
209-48307- 1		1	BG232								
209-48307- 3	PG. 1019	1	BG232	M		O					
	PG. 1026										
209-48308	95 -183	1	CM310	M		O					
209-48308- 5		1	CM310	M		O					
209-48308- 7		1	CM310	M		O					
209-48308- 9		2	CM310	M		O					
209-48308- 11		1	CM310	M		O					
209-48308- 13		1	CM310	M		O					
209-48309	93 - 10	1	BL 34	P1	F	O	S		R	1560-098-1496	ANAA
	94 - 4										
	95 - 8										
	97 - 3										
209-48310	93 - 14	1	BG 3	P1	F	O	S		R	2910-031-5082	ANAA
	94 - 8										
	95 - 12										
	97 - 7										
209-483101		1	BV115	M		O					
209-483101- 3		1	BV115	M		O					
209-483102	113 - 6	1	BG233	M		O					
209-483102- 3		1	BG233	M		O					
209-483103- 3		1	DS 61	M		O					
209-483103- 5		1	DS 61	M		O					
209-483103- 7		1	DS 61	M		O					
209-483103- 9		1	DS 61	M		O					
209-483103- 11		1	DS 61	M		O					
209-483103- 13		1	DS 61	M		O					
209-483104		1	BL 36	M		O					
209-483104- 3		1	BL 36	M		O					
209-483105- 1	113 - 8	1	BG234	M		O					
209-483106	113 - 40	1	BL 37	M		O					
209-483106- 3		1	BL 37	M		O					
209-483106- 5		1	BL 37	M		O					
209-483107		1	BL 38	M		O					
209-483107- 3		1	BL 38	M		O					
209-483107- 9		1	BL 38	M		O					
209-483108		1	BV110	M		O					
209-483108- 3		1	BV110	M		O					
209-48311	93	1	BL 40	X1							
	94										
	95										
	97										
209-483110- 3		1	BX180	M		F					
209-483110- 5		1	BX180	M		F					
209-483112- 1	113 - 5	1	BJ 93	M		O					
209-483112- 3		1	BJ 93	M		O					
209-483112- 5		1	BJ 93	M		O					
209-483112- 7		1	BJ 93	M		O					
209-483112- 9		1	BJ 93	M		O					
209-483112- 11		1	BJ 93	M		O					
209-483112- 13		1	BJ 93	M		O					
209-483112- 15		1	BJ 93	M		O					
209-483112- 17		1	BJ 93	M		O					
209-483112- 19		1	BJ 93	M		O					
209-483112- 21		1	BJ 93	M		O					
209-483112- 23		1	BJ 93	M		O					
209-483112- 25		1	BJ 93	M		O					
209-483112- 27		1	BJ 93	M		O					
209-483112- 33		1	BJ 93	M		O					
209-483112- 35		1	BJ 93	M		O					
209-483112- 37		1	BJ 93	M		O					
209-483112- 39		1	BJ 93	M		O					
209-483112-101	113	1	BJ 93	M		O					
209-483112-103		1	BJ 93	M		O					
209-483112-201	113	1	BJ 93	M		O					
209-483112-203		1	BJ 93	M		O					
209-483115	113	4	BU 1	M		O					
	114 - 55										
	358										
209-483117	113 - 47	2	BD255	M		O					
	358										
209-483119	113 - 45	1	BV122	M		O					
	358										
209-483119- 3		1	BV122	M		O					
209-483119- 5		1	BV122	M		O					
209-483119- 7		1	BV122	M		O					
209-483119- 9		1	BV122	M		O					
209-483119- 11		1	BV122	M		O					
209-483119- 13		1	BV122	M		O					
209-483119- 15		1	BV122	M		O					
209-483119- 17		1	BV122	M		O					
209-483119- 19		1	BV122	M		O					
209-483119- 21		1	BV122	M		O					
209-483119- 23		1	BV122	M		O					
209-483119- 25		1	BV122	M		O					
209-48312	95 - 57	2	BU193	M		O					
	97 - 56										
209-48312- 3		1	BU193	M		O					
209-48312- 5		1	BU193	M		O					
209-48312- 7		1	BU193	M		O					
209-483126		1	BV190	M		O					
209-483126- 3		1	BV190	M		O					
209-483126- 5		1	BV190	M		O					
209-483126- 11		1	BV190	M		O					
209-483128	249 - 12	1	DS 62	M		O					
209-483128- 11	249 - 12	1	DS 62	M		O					
209-483129	113 - 41	1	BD256	M		O					
209-48313- 1		1	CB 40	M		O					
209-48313- 2		1	CB 40	M		O					
209-48313- 3		1	CB 40	M		O					
209-48313- 4		1	CB 40	M		O					
209-483130	249 - 14	1	DS 63	M		O					
209-483130- 3		1	DS 63	M		O					
209-483130- 5		1	DS 63	M		O					
209-483130- 7		1	DS 63	M		O					
209-483130- 11		1	DS 63	M		O					
209-483131	249 - 13	1	DS 64	M		O					
209-483131- 3		1	DS 64	M		O					
209-483131- 5		1	DS 64	M		O					
209-483131- 7		1	DS 64	M		O					
209-483131- 11		1	DS 64	M		O					
209-483132	95 - 47	1		M		O					
	97 - 44										
209-483132- 3		1		M		O					
209-483132- 5		1		M		O					
209-483132- 7		1		M		O					
209-483133	95 - 46	1		M		O					
	97 - 42										
209-483133- 3		1		M		O					
209-483133- 5		1		M		O					
209-483133- 7		1		M		O					
209-483134	341	2	CD 61	M		O					
209-483134- 11	341	2	CD 61	M		O			R	1680-609-4989	8210
209-483134- 21	341	1	CD 61	M		O					
209-483134- 31	341	1		M		O					
209-483135	341 - 25	2	BS121	M		O					
209-483136	341 - 24	2	CD 73	M		O					
209-483136- 3	341	1	CD 73	M		O					
209-483139	341	2	BS115								
209-48314		2	DB291	M		O					
	341 - 21	1									
209-483140- 3		2	BV 46	M		O					
209-483141	341	2	BS122	M		O					
209-483142	341 - 25	2		M		O					
209-483143		1	CP 70								
209-483143- 1	93 -158	1	CP 70	M		O					
209-483143- 2	93 -159	1	CP 70	M		O					
209-483143- 3		1	CP 70	M		O					
209-483143- 4		1	CP 70	M		O					
209-483143- 7		2	CP 70	M		O					
209-483144- 1	93	1	CE108	M		O					
209-483144- 2	93	1	CE108	M		O					
209-483144- 9		2	CE108	M		O					
209-483144- 11	93	1	CE108	M		O					
209-483144- 12	93	1	CE108	M		O					
209-483146- 1	93 -154	1	CB 28	M		O					
209-483146- 2	93 -155	1	CB 28	M		O					
209-483147	93 -156	2	CB 17	P1	F	O	C		R	1640-522-4609	ANAA
209-483148- 1	93	1	CE107	A		F					
209-483148- 2	93	1	CE107	A		F					
209-483149	93	1	CA242	M		O					
209-483149- 3		1	CA242	M		O					
209-483149- 5		1	CA242	M		O					
209-483150	93	1		M		O					
209-483150- 3		1		M		O					
209-483150- 5		1		M		O					
209-483152- 1	100 -102	1	DP 32	P1	O	O	S		R	1560-511-2239	ANAA
209-483152- 2	100 -103	1	DP 32	P1	O	O	S		R	1560-511-2259	ANAA
209-483152- 11	100 -102	1	DP 32	P1	O	O	S		R	1640-571-7122	ANAA
209-483152- 12	100 -103	1	DP 32	P1	O	O	S		R	1640-571-7123	ANAA
209-483154- 1	100 -114	1	DP 44	P1	O	O	S		R	1560-511-2270	ANAA
209-483154- 2	100 -115	1	DP 44	P1	O	O	S		R	1560-511-2276	ANAA
209-483154- 11	100 -114	1	DP 44	P1	O	O	S		R	1640-571-7124	ANAA
209-483154- 12	100 -115	1	DP 44	P1	O	O	S		R	1640-571-7125	ANAA
209-483157	100 -127	1	DJ282	P1	F	O	S		R	1560-570-2277	ANAA
	101 - 92										
	103 - 88										
209-483158	100 -126	1	DH140	A		F					
	101 - 91										
	103										
209-483159	339 -117	2	DJ214	P1	F	O	S		R	1560-569-4646	ANAA
209-48316	95 - 54	1	BL 44	M		O					
	97 - 52										
209-48316- 9		1	BL 44	M		O					
209-48316- 11		1	BL 44	M		O					
209-48316- 13		1	BL 44	M		O					
209-483161- 1	100 -173	1		A		O					
209-483161- 2	100 -174	1		A		O					
209-483161- 3		2		M		O					
209-483161- 5		2		M		O					
209-483161- 7		1		M		O					
209-483161- 8		1		M		O					
209-483161- 11	100 -178	1		A		O					
209-483161- 12	100	1		A		O					
209-483162- 1	100 -179	1		P1	O	O	S		R	1560-560-6354	ANAA
209-483162- 2	100	1		P1	O	O	S		R	1560-560-6355	ANAA
209-483164	100 -109	2	DR351	P1	F	O	S		R	4730-570-2278	ANAA
209-483167	111 - 38	1		M		O					
209-483167- 3		1		M		O					
209-483168	94 - 40	1	DJ171	M		O					
209-483168- 3		1	DJ171	M		O					
209-483168- 5		1	DJ171	M		O					
209-483168- 7		1	DJ171	M		O					
209-48317	95 -100	1	BL 45	P1	F	O	S		R	2910-031-5083	ANAA
	97 -102										
209-483171- 1	13 -149	1	DH141	M		O					
209-483171- 2	13	1	DH141	M		O					
209-483172	112 - 32	1	DH122								
209-483172- 1	13 -150	1	DH122	M		O					
209-483172- 2	13	1	DH122	M		O					
209-483173	112 - 34	2	DJ 21						R	1560-571-7126	ANAA
209-483174	13 -140	1	DH123								
	112 - 33										
209-483174- 1		1	DH123	M		O					
209-483174- 2		1	DH123	M		O					
209-483175	13 -139	2	DH142	M		O					
209-483176- 1	112	2	DH143						R	1560-571-7127	ANAA
209-483176- 2	112	2	DH143						R	1560-571-7128	ANAA
209-483177	113	1		M		O					
209-483177- 3		1		M		O					

PART NUMBER	FIGURE AND INDEX	TOTAL QTY.	MICRO-FILM NUMBER	MAINTENANCE CODE DATA: SOURCE CODE	INSTL CAPABILITY	PRE-INSTL CAPABILITY	RECOVERABILITY	SUPPORT EQUIPMENT	FEDERAL STOCK NUMBER DATA: COGNIZANCE CODE	FEDERAL STOCK NUMBER	MFG. CODE (TSMC)
209-483177- 5		1		M		0					
209-48318	95	1	BV112	M		0					
209-48318- 3		1	BV112	M		0					
209-48318- 5		1	BV112	M		0					
209-48318- 7		1	BV112	M		0					
209-483180		1		M		0					
209-483181- 11	94 -185	1		P1	F	0	S		R	1560-544-4566	ANAA
209-483182		1		M		0					
209-483187		1		M		0					
209-48319		1	BL 17	M		F					
209-483193	105 - 16	1		P1	F	0	S		R	1560-570-2279	ANAA
209-483194	100 - 79	1		P1	F	0	S		R	1560-569-5063	ANAA
209-483196	100 - 73	1		A		F					
	101 - 14										
	103 - 6										
209-483198	105 - 14	2	DP 39	M		0					
209-483198- 3		1	DP 39	M		0					
209-483198- 5		1	DP 39	M		0					
209-483198- 7		1	DP 39	M		0					
209-483199	105 - 22	1	DS 65	M		0					
209-483199- 3		1	DS 65	M		0					
209-48320		1	DH 78	M		0					
209-483202		1	DJ217						R	1680-609-4399	B210
209-483203	349 - 62	1									
209-483204	349 - 49	1									
209-483205	349 - 71	1									
209-483206		1	OP 78						R	1680-609-4400	B210
209-483207- 1	349 - 70	1									
209-483207- 2	349	1	DH 80						R	4730-609-4397	B210
209-483208	349	1	DJ221								
	349	1									
209-483208- 1	349 - 69	1									
209-483209		1	DM201								
209-48321		1	DJ223	M		0					
	349 - 89	1									
209-483211	100 -121	2	DJ224								
209-483212	349	1	DJ225								
	349	1									
209-483213	100 -122	2									
209-483214		1	DD153								
209-483214- 7	349 - 47	1									
209-483214- 11	349 - 46	1									
209-483214- 13	349	1									
209-483215	100 -125	2	DR348						R	1560-571-5495	ANAA
209-483216		1	DJ 47	M		0					
209-483217- 3	119 - 25	1	DD278	P1	F	0	S		R	1680-609-4190	B210
209-483217- 4	119	1	DD278	P1	F	0	S		R	1560-594-7152	ANAA
209-483218	104 - 7	2									
	105 - 8	2	DL 43	M		0					
209-48322		1	DD154								
209-48322- 3	338 - 75	2	BX 80	X2							
	339 - 79										
209-483220- 1	339 -119	1							R	1680-609-4404	B210
209-483220- 2	339	1							R	1680-609-4405	B210
209-483221	349 - 50	1									
209-483222	349 - 54	1									
209-483223- 3	349 - 53	1									
209-483223- 4	349	1	DP137								
	349	1									
209-483224	236	1	DR 88	M		0					
209-483225		1	DR 65	M		0					
209-483225- 3		1	DR 65	M		0					
209-483226		1	DR 66	M		0					
209-483227		1	DR 42	M		0					
209-483228		1		M		0					
209-483228- 3		1		M		0					
209-483228- 5		1		M		0					
209-483228- 7		1		M		0					
209-483228- 9		1		M		0					
209-483228- 11	100 - 25	1		M		0					
	103 - 3										
209-483229	100 - 33	1	DS 3	P1		0	S		R	1560-586-7411	ANAA
	103 -154										
209-48323		1	DD168	M		0					
209-48323- 11	94	1	DD168	M		0					
209-483231- 1	103 - 65	1		M		0					
209-483231- 3		1		M		0					
209-483231- 5		1		M		0					
209-483231- 11	103 - 64	1		M		0					
209-483234	100 - 44	1		P1	F	0	S		R	1560-575-2174	ANAA
	103 -104										
	113										
209-483234- 3		1		M		0					
209-483234- 5		1		M		0					
209-483234- 11		1		X1							
209-483235	103 - 63	1		M		0					
209-483235- 3		1		M		0					
209-483235- 5		1		M		0					
209-483236		1		M		0					
209-483239		1		M		0					
209-48324		2	BD262	M		0					
209-483241	97 -192	1		P1	F	0	S		R	1560-575-2178	ANAA
209-483243	100 - 21	1							R	1560-588-3545	ANAA
	103 -174										
209-483244	119 - 7	1		M		0					
209-483246	349 - 88	1									
209-483247	349 - 86	1									
209-48325	104 - 27	1									
	105 - 36										
209-48325- 3		1	BG238	M		0					
209-48326	104 - 51	1									
	105 - 61										
	111 - 50										
209-48327- 1	93 - 27	1	BG240	M		0					
209-48327- 2	93 - 29	1	BG240	M		0					
	94 - 21										
	95 - 27										
	97 - 21										
209-48327- 3		1	BG240	M		0					
209-48327- 4		1	BG240	M		0					
209-48328	105 - 8										
209-48329		1	BG241	M		0					
209-48331	95	1									
209-48331- 3	97	1	BL 46	A		F					
209-48331- 4	95 - 80	1	BL 46	A		F					
	97										
209-48332	96 - 20	2	BL 47	P1	F	0	S		R	2910-031-5084	ANAA
	101 -107										
	102 - 83										
	102 -110										
	103 - 72										
	103 -119										
209-48333	96 - 14	2	BL 46								
	101 -101										
	102 - 77										
	102 -104										
	103										
209-48334- 1	98 - 34	1	BL 49	P1	F	0	S		R	2910-031-5085	ANAA
209-48334- 2	98 - 35	1	BL 49	P1	F	0	S		R	2910-031-5086	ANAA
209-48335- 1	98 - 28	1	BL 51	A		F					
209-48335- 2	98 - 29	1	BL 51	A		F					
209-48337		2	BA 55	M		0					
209-48338		7	BG242	M		0					
209-48339		3	BV116	X1							
209-48342	110 - 15	1	BG243	X2							
209-48343- 3	119 - 24	1		X2							
209-48343- 4	119	1		X2							
209-48343- 5	119 - 24	1		X2							
209-48343- 6	119	1		X2							
209-48344		1	BL 53	M		0					
209-48345	110 - 8	1	BU188	X2							
209-48346- 3		1	DN 43	X1							
209-48346- 4		1	DN 43	X1							
209-48346- 11	119 - 52	1	BG 4	P1	F	0	S		R	1560-510-1135	ANAA
209-48346- 12	119	1	BG 4	P1	F	0	S		R	1560-510-1136	ANAA
209-48348		1	DQ161	M		0					
209-48349		1	DR 63	M		0					
209-48350		1	BD264	M		0					
209-48351- 11	94 - 1	1									
209-48351- 21	94	1									
209-48352	92 - 46	1									
209-48356		1							R	5310-285-1480	ANAA
209-48358	96 - 2	1	BV135	M		0					
	101 - 27										
	102 - 17										
	103 - 13										
209-48358- 3		1	BV135	M		0					
209-48359	98 - 9	2	BV238	P	F	0	S		R	2910-031-5087	ANAA
209-48360	98 - 2	2	BL 54	A		F					
209-48361	98 - 6	2	BL 55	M		0					
209-48361- 3		2	BL 55	M		0					
209-48361- 5		2	BL 55	M		0					
209-48361- 11		2	BL 55	M		0					
209-48363		1	DS 93	M		0					
209-48364		1	DS 94	M		0					
209-48365	98 -124	1	BG248	M		0					
	99 -154										
	100 -222										
209-48366	98 -123	1	BG249	M		0					
	99 -153										
	100 -221										
209-48367		1	BD265	M		0					
209-48368		1	BD266	M		0					
209-48370		1	BL 58	M		0					
209-48370- 3		1	BL 58	M		0					
209-48370- 5		1	BL 58	M		0					
209-48370- 7		1	BL 58	M		0					
209-48371		1	BL 59	M		0					
209-48372		1	BD267	M		0					
209-48373- 1	93 - 63	1		P1	F	0	S		R	2910-031-5088	ANAA
	94 - 63										
	95 - 39										
	97 - 34										
209-48373- 2	93 - 60	1		P1	F	0	S		R	2910-031-5089	ANAA
	94 - 59										
	95 - 40										
	97 - 35										
209-48374- 1	95 - 86	1	BL 61	P1	F	0	S		R	2910-031-5090	ANAA
	97 - 89										
209-48374- 2	95 - 87	1	BL 61	P1	F	0	S		R	2910-031-5091	ANAA
	97 - 90										
209-48375	98	1	BL 62	P1	F	0	S		R	2910-031-5092	ANAA
	99										
	100										
209-48376- 3		4	BG250	M		0					
209-48376- 5		4	BG250	M		0					
209-48376- 7		4	BG250	M		0					
209-48376- 9		4	BG250	M		0					
209-48376- 11		4	BG250	M		0					
209-48376- 13		4	BG250	M		0					
209-48377	93 - 64	2	BL 63	M		0					
	94 - 64										
	95 - 41										
	97 - 36										
209-48377- 3		2	BL 63	M		0					
209-48378	96 - 11	1	BV120	M		0					
	101 - 66										
	102 - 41										
	103 - 25										
209-48378- 3		1	BV120	M		0					

PART NUMBER	FIGURE AND INDEX	TOTAL QTY.	MICRO-FILM NUMBER	MAINTENANCE CODE DATA: SOURCE CODE	INST'L CAPABILITY	PRE-INST'L CAPABILITY	RECOVERABILITY	SUPPORT EQUIPMENT	FEDERAL STOCK NUMBER DATA: COGNIZANCE CODE	FEDERAL STOCK NUMBER	MFG. CODE (TSMC)
209-48378- 5		1	BV120	M		O					
209-48379	101 - 67	1	BG251	M		O					
	102 - 42										
	103 - 24										
209-48379- 3		1	BG251	M		O					
209-48379- 5		2	BG251	M		O					
209-48380	341	2	BS 81	A		O					
209-48380- 11	341	2	BS 81	A		O					
209-48382		2	BG252						R	1640-662-3713	ANAA
209-48383	338 - 76	2		M		O					
	339 - 40										
209-48384- 1	341 - 30	2	BD268	M		O					
209-48384- 3	341 - 38	2	BD268	M		O					
209-48385	341	2	BV 39	M		O					
209-48385- 5	341 - 11	2	BV 39	M		O					
209-48386	341 - 14	2	BV 38	M		O					
209-48386- 13	341 - 14	2	BV 38	M		O					
209-48387	341 - 9	2									
	341 - 27										
209-48387- 11	341 - 9	4		M		O					
	341 - 27										
	PG. 1011										
209-48388	341 - 10	2	BG256	M		O			R	1640-315-5791	ANAA
	341 - 28										
	PG. 1011										
209-48389	338 - 30	1		P1	F	O	S		R	1560-325-5688	ANAA
	339 - 73										
209-48390- 1	341 - 31	2	BD269	M		F					
209-48390- 3	341 - 37	2	BD269	M		F					
209-48392- 1	119 - 2	1	DG118	P1	F	O	S		R	1640-315-5792	ANAA
209-48392- 2	119	1	DG118	P1	F	O	S		R	1640-315-5793	ANAA
209-48392- 3		1	DG118	M		O					
209-48392- 4		1	DG118	M		O					
209-48392- 5		1	DG118	M		O					
209-48392- 6		1	DG118	M		O					
209-48392- 7		1	DG118	M		O					
209-48392- 8		1	DG118	M		O					
209-48392- 9		2	DG118	M		O					
209-48392- 11	119	1	DG118	X1							
209-48392- 12	119	1	DG118	X1							
209-48392- 13		2	DG118	M		O					
209-48392- 15		2	DG118	M		O					
209-48392- 16		2	DG118	M		O					
209-48392- 17		2	DG118	M		O					
209-48392- 19		1	DG118	M		O					
209-48392- 20		1	DG118	M		O					
209-48392- 21	119	1	DG118	X1							
209-48392- 22	119	1	DG118	X1							
209-48392- 23		2	DG118	M		O					
209-48392- 25		4	DG118	M		O					
209-48392- 31	119	1	DG118	X1							
209-48392- 32	119	1	DG118	X1							
209-48393- 1	338 - 43	1		X2							
	339 - 27										
209-48393- 2	338	1		X2							
	339										
209-48394	338 - 13	2	BX195	P	F	O	S		R	1640-315-5794	ANAA
	338 - 14										
209-48394- 11	338 - 13	2	BX195	P1	F	O	S		R	1640-522-8876	ANAA
	338 - 14										
	338 - 14										
209-48397	96 - 12	1		X2							
	108 - 15										
209-48398	338 - 37	1		M		O					
	339 - 24										
209-48399	338 - 26	2	DQ 40	M		O					
	339 - 70										
209-48401	113 - 44	1	BV125	A		F					
209-48401- 11	113	1	BV125	A		F					
209-48403	95 -136	1	CA162	X2							
	97 -137										
209-48404- 1	95 -173	2	DS 49	P1	F	O	S		R	2910-031-5093	ANAA
	97 -176										
	358										
209-48404- 2	95 -174	2	DS 49	P1	F	O	S		R	2910-031-5094	ANAA
	97 -177										
	358										
209-48405	95 -124	1	BL 67	P1	F	O	S		R	1560-031-5095	ANAA
	97 -126										
	358										
209-48406	95 -128	1	DJ251	A		F					
	97										
	358										
209-48407	95 -131	1	BL 68	P1	F	O	S		R	2910-031-5096	ANAA
	97 -132										
209-48408	95 - 70	1	DL 44	P	F	O	S		R	1560-323-4157	ANAA
	97 - 70										
209-48408- 3		1	DL 44	M		O					
209-48408- 5		1	DL 44	M		O					
209-48409	97 -187	1		P1					R	1560-586-8466	ANAA
209-48410	103 - 22	1		M		O					
209-48410- 3		1		M		O					
209-48410- 5		1		M		O					
209-48411		2	BJ 18								
209-48412	98 - 61	1	BL 69	A		F					
	99										
	100 -189	1									
	358										
209-48413	98 - 62	1	BL 70	P1	F	O	S		R	2910-031-5097	ANAA
	99 - 87										
	100 -190										
209-48414	98 - 56	1	BL 71	M		O					
	99 - 81										
	100 -188										
	358										
209-48415	95 -118	1	BL 72	X2							
	97 -120										
	358										
209-48416		1	BL 73	M		O					
209-48417	96 - 42	1	BL 74	M		O					
	102 -142										
	103 -137										
	358										
209-48418		1	BG263	M		O					
209-48419		1	BG264	M		O					
209-48420	98 - 67	11	BV133	P1	F	O	S		R	1560-612-7243	ANAA
	99 - 92										
209-48420- 3		1	BV133	X1							
209-48422	98 - 75	2	BG265	M		O					
	99 -108										
	100 -208	2									
	358										
209-48423	113 - 54	1	BG266	M		O					
	358										
209-48424	95 -163	1	BL 75	P1	F	O	S		R	2910-031-5098	ANAA
	97 -165										
	358										
209-48425		1	BG267	M		O					
209-48426	98 - 76	1	DS 66	P1	F	O	S		R	1560-341-4665	ANAA
	99 -109										
	100 -213	1									
	358										
209-48429		1	CA148	M		O					
209-48430	96 - 48	1	BL 77	P1	F	O	S		R	2910-031-5099	ANAA
	102 -148										
	103 -140										
209-48431	96 - 45	1	BL290	A		F					
	102 -145										
	103										
	358										
209-48432	99 - 93	1		P1	F	O	S		R	1560-570-2280	ANAA
	100 -193										
	358										
209-48432- 3		1		X1							
209-48433		1		M		O					
209-48434		1							R	1560-571-7129	ANAA
209-48435		1	DS 67	M		O					
209-48436	101 - 49	1		P1	F	O	S		R	1560-569-5072	ANAA
	103 -179										
	105 - 19										
209-48437		1		M		O					
209-48491- 11	113	1									
209-48496		1									
209-48601- 1		1	BG269	M		O					
209-48601- 2		1	BG269	M		O					
209-48602	114 - 1	2	BL 78	M		O					
209-48603- 1		1	BG270	M		O					
209-48603- 2		1	BG270	M		O					
209-48604- 1		1	BG271	M		O					
209-48604- 2		1	BG271	M		O					
209-48605		1	BL 79	M		O					
209-48606		4	DM283								
209-48606- 3		4	DM283	M		O					
209-48606- 5		1	DM283	M		O					
209-48606- 7		1	DM283	M		O					
209-48606- 9		1	DM283	M		O					
209-48606- 10		1	DM283	M		O					
209-48607	114 - 2	1	BV136	M		O					
209-48608- 1	113 - 2	2	BG272	M		O					
209-48608- 3	113 - 3	2	BG272	M		O					
209-48608- 5	113 - 4	2	BG272	M		O					
209-48621- 3		1	BV127	M		O					
209-48621- 5		1	BV127	M		O					
209-48621- 7		1	BV127	M		O					
209-48621- 9		1	BV127	M		O					
209-48621- 10		1	BV127	M		O					
209-48621- 11		1	BV127	M		O					
209-48621- 12		1	BV127	M		O					
209-48621- 13		1	BV127	M		O					
209-48621- 14		1	BV127	M		O					
209-48621- 15		1	BV127	M		O					
209-48621- 16		1	BV127	M		O					
209-48621- 17		1	BV127	M		O					
209-48621- 18		1	BV127	M		O					
209-48621- 19		1	BV127	M		O					
209-48621- 20		1	BV127	M		O					
209-48621- 21		1	BV127	M		O					
209-48621- 22		1	BV127	M		O					
209-48621- 23		1	BV127	M		O					
209-48621- 24		1	BV127	M		O					
209-48621- 25		1	BV127	M		O					
209-48621- 26		1	BV127	M		O					
209-48621- 27		1	BV127	M		O					
209-48621- 28		1	BV127	M		O					
209-48621- 29		1	BV127	M		O					
209-48621- 30		1	BV127	M		O					
209-48621- 31		1	BV127	M		O					
209-48621- 33		1	BV127	M		O					
209-48621- 41	114 - 5	1	BV127	P1	O	O	S		R	1560-323-5100	ANAA
209-48621- 51	114 - 6	1	BV127	P1	O	O	S		R	1560-031-5101	ANAA
209-48621- 53	101 - 15	1	BV127								
209-48621- 61	114 - 7	1	BV127	P1	O	O	S		R	1560-037-2612	ANAA
209-48621- 81		1	BV127								
209-48621-103		1	BV127	M		O					
209-48621-107		1	BV127	M		O					
209-48621-141	114	1	BV127	P1	O	O	S		R	1560-323-4158	ANAA
209-48624- 1	114 - 53	1	BV128	M		O					
209-48624- 2	114	1	BV128	M		O					
209-48624- 3		2	BV128	M		O					
209-48624- 5		2	BV128	M		O					

PART NUMBER	FIGURE AND INDEX	TOTAL QTY.	MICRO-FILM NUMBER	MAINTENANCE CODE DATA: SOURCE CODE	INSTL CAPABILITY	PRI-INSTL CAPABILITY	RECOVERABILITY	SUPPORT EQUIPMENT	COGNIZANCE CODE	FEDERAL STOCK NUMBER DATA: FEDERAL STOCK NUMBER	MFG. CODE (TSMC)
209-48624- 7		1	BV128	M		O					
209-48624- 8		1	BV128	M		O					
209-48624- 9		1	BV128	M		O					
209-48624- 10		1	BV128	M		O					
209-48624- 11		1	BV128	M		O					
209-48624- 12		1	BV128	M		O					
209-48624- 13		2	BV128	M		O					
209-48624- 15		1	BV128	M		O					
209-48624- 16		1	BV128	M		O					
209-48625- 1		8	BD270	M		O					
209-48625- 3		1	BD270	M		O					
209-48626- 1		54	BL 81	M		O					
209-48626- 3		8	BL 81	M		O					
209-48626- 5		1	BL 81	M		O					
209-48626- 7		1	BL 81	M		O					
209-48626- 9		24	BL 81	M		O					
209-48626- 11		1	BL 81	M		O					
209-48626- 13		1	BL 81	M		O					
209-48626- 15		2	BL 81	M		O					
209-48626- 17		1	BL 81	M		O					
209-48626- 18		1	BL 81	M		O					
209-48628	114 - 54	2	BG273	M		O					
209-48628- 3		2	BG273	M		O					
209-48628- 5		2	BG273	M		O					
209-48628- 7		2	BG273	M		O					
209-48629		10	BL 82	M		O					
209-48630	114 - 15	2	BG274	M		O					
209-48630- 3		2	BG274	M		O					
209-48630- 5		2	BG274	M		O					
209-48630- 7		2	BG274	M		O					
209-48631		1	BV126	U							
209-48632- 15		10	BV124	M		O					
209-48632-103		2	BV124	M		O					
209-48632-105		1	BV124	M		O					
209-48632-107		2	BV124	M		O					
209-48632-109		2	BV124	M		O					
209-48632-111		2	BV124	M		O					
209-48632-113		1	BV124	M		O					
209-48632-121		2	BV124	P	F	O	S		R	1560-338-1013	ANAA
209-48632-131		1	BV124	P	F	O	S		R	1560-338-1014	ANAA
209-48632-141		2	BV124	P	F	O	S		R	1560-338-1015	ANAA
209-48632-151		2	BV124	P	F	O	S		R	1560-338-1016	ANAA
209-48632-161		2	BV124	P	F	O	S		R	1560-338-1017	ANAA
209-48632-171		1	BV124	P	F	O	S		R	1560-338-1018	ANAA
209-48633- 5		1	BV113	M		O					
209-48633- 7		1	BV113	M		O					
209-48633- 8		1	BV113	M		O					
209-48633- 9		1	BV113	M		O					
209-48633- 10		1	BV113	M		O					
209-48633- 11	114 - 16	2	BV113	M		O					
209-48633- 13		1	BV113	M		O					
209-48633- 15		1	BV113	M		O					
209-48633- 17		1	BV113	M		O					
209-48633- 18		1	BV113	M		O					
209-48633- 21	114 - 17	1	BV113	M		O					
209-48633- 22	114	1	BV113	M		O					
209-48633- 23		1	BV113	M		O					
209-48633- 25		2	BV113	M		O					
209-48633- 27		2	BV113	M		O					
209-48633- 29		1	BV113	M		O					
209-48633- 31	114 - 18	1	BV113	M		O					
209-48633- 32	114	1	BV113	M		O					
209-48633- 33		1	BV113	M		O					
209-48633- 35		2	BV113	M		O					
209-48633- 41	114 - 19	2	BV113	M		O					
209-48633- 51	114 - 20	2	BV113	M		O					
209-48633- 61	114 - 21	1	BV113	M		O					
209-48633- 62	114	1	BV113	M		O					
209-48634- 1	114 - 22	1	BV 3	M		O					
209-48634- 2	114	1	BV 3	M		O					
209-48634- 3		1	BV 3	M		O					
209-48634- 4		1	BV 3	M		O					
209-48634- 5		1	BV 3	M		O					
209-48634- 6		1	BV 3	M		O					
209-48634- 7		1	BV 3	M		O					
209-48634- 8		1	BV 3	M		O					
209-48634- 9		1	BV 3	M		O					
209-48634- 10		1	BV 3	M		O					
209-48634- 11	114 - 23	1	BV 3	M		O					
209-48634- 12	114	1	BV 3	M		O					
209-48634- 13		1	BV 3	M		O					
209-48634- 14		1	BV 3	M		O					
209-48634- 15		1	BV 3	M		O					
209-48634- 16		1	BV 3	M		O					
209-48634- 17		1	BV 3	M		O					
209-48634- 18		1	BV 3	M		O					
209-48634- 19		1	BV 3	M		O					
209-48634- 20		1	BV 3	M		O					
209-48634- 21	114 - 24	1	BV 3	M		O					
209-48634- 22	114	1	BV 3	M		O					
209-48634- 23		1	BV 3	M		O					
209-48634- 24		1	BV 3	M		O					
209-48634- 25		1	BV 3	M		O					
209-48634- 26		1	BV 3	M		O					
209-48634- 27		1	BV 3	M		O					
209-48634- 28		1	BV 3	M		O					
209-48634- 29		2	BV 3	M		O					
209-48634- 30		1	BV 3	M		O					
209-48634- 31	114 - 25	1	BV 3	M		O					
209-48634- 32	114	1	BV 3	M		O					
209-48634- 33		1	BV 3	M		O					
209-48634- 34		1	BV 3	M		O					
209-48634- 35		1	BV 3	M		O					
209-48634- 36		1	BV 3	M		O					
209-48634- 37		1	BV 3	M		O					
209-48634- 38		1	BV 3	M		O					
209-48634- 39		1	BV 3	M		O					
209-48634- 40		1	BV 3	M		O					
209-48634- 41	114 - 26	1	BV 3	M		O					
209-48634- 42	114	1	BV 3	M		O					
209-48634- 43		1	BV 3	M		O					
209-48634- 44		1	BV 3	M		O					
209-48634- 45		1	BV 3	M		O					
209-48634- 46		1	BV 3	M		O					
209-48634- 47		1	BV 3	M		O					
209-48634- 48		1	BV 3	M		O					
209-48634- 49		1	BV 3	M		O					
209-48634- 50		1	BV 3	M		O					
209-48634- 51	114 - 27	1	BV 3	M		O					
209-48634- 52	114	1	BV 3	M		O					
209-48634- 61	114 - 28	1	BV 3	M		O					
209-48634- 62	114	1	BV 3	M		O					
209-48634- 63		2	BV 3	M		O					
209-48634- 69		2	BV 3	M		O					
209-48634- 71	114 - 29	1	BV 3	M		O					
209-48634- 72	114	1	BV 3	M		O					
209-48634- 75		2	BV 3	M		O					
209-48634- 77		5	BV 3	M		O					
209-48634- 78		5	BV 3	M		O					
209-48634- 79		5	BV 3	M		O					
209-48634- 80		5	BV 3	M		O					
209-48634- 81	114 - 30	1	BV 3	M		O					
209-48634- 82	114	1	BV 3	M		O					
209-48634- 91	114 - 31	1	BV 3	M		O					
209-48634- 92	114	1	BV 3	M		O					
209-48635	114 - 3	1	BP 20	M		O					
209-48635- 3		1	BP 20	M		O					
209-48635- 5		2	BP 20	M		O					
209-48635- 7		1	BP 20	M		O					
209-48635- 9		1	BP 20	M		O					
209-48635- 11		3	BP 20	M		O					
209-48635- 13		2	BP 20	M		O					
209-48635- 19		1	BP 20	M		O					
209-48635- 23		1	BP 20	M		O					
209-48635- 27		1	BP 20	M		O					
209-48635- 31		2	BP 20	M		O					
209-48635- 33		3	BP 20	M		O					
209-48635- 35		2	BP 20	M		O					
209-48636	114 - 4	1	BV 84	M		O					
209-48637- 1	114 - 32	1	CA117	M		O					
209-48637- 2	114	1	CA117	M		O					
209-48637- 3		1	CA117	M		O					
209-48637- 4		1	CA117	M		O					
209-48637- 5		2	CA117	M		O					
209-48637- 7		1	CA117	M		O					
209-48637- 8		1	CA117	M		O					
209-48637- 9		1	CA117	M		O					
209-48637- 10		1	CA117	M		O					
209-48637- 11	114 - 33	1	CA117	M		O					
209-48637- 12	114	1	CA117	M		O					
209-48637- 13		1	CA117	M		O					
209-48637- 14		1	CA117	M		O					
209-48637- 15		1	CA117	M		O					
209-48637- 16		1	CA117	M		O					
209-48637- 17		1	CA117	M		O					
209-48637- 18		1	CA117	M		O					
209-48637- 19		1	CA117	M		O					
209-48637- 20		1	CA117	M		O					
209-48638- 1	114 - 41	1	BG275	M		O					
209-48638- 2	114	1	BG275	M		O					
209-48638- 3		1	BG275	M		O					
209-48638- 4		1	BG275	M		O					
209-48638- 5		2	BG275	M		O					
209-48640- 1	114 - 42	1	BG276	M		O					
209-48640- 2	114 - 43	1	BG276	M		O					
209-48641		1	BU133	U							
209-48641- 3	114 - 8	5	BU133	M		O					
209-48641- 5	114 - 9	2	BU133	M		O					
209-48641- 7	114 - 11	2	BU133	M		O					
209-48641- 9	114 - 10	10	BU133	M		O					
	114 - 12										
209-48641- 11	114 - 13	1	BU133	M		O					
209-48641- 13	114 - 14	2	BU133	M		O					
209-48642	114 - 44	1	BL 83	M		O					
209-48642- 3		1	BL 83	M		O					
209-48642- 5		1	BL 83	M		O					
209-48642- 7		1	BL 83	M		O					
209-48642- 11		1	BL 83	M		O					
209-48643- 3		1	DK157	M		O					
209-48643- 4		1	DK157	M		O					
209-48643- 5		2	DK157	M		O					
209-48643- 7		2	DK157	M		O					
209-48643- 9		2	DK157	M		O					
209-48643- 11	114 - 45	2	DK157								
209-48643- 12	114	1	DK157	M		O					
209-48643- 13		2	DK157	M		O					
209-48643- 15		2	DK157	M		O					
209-48643- 17		1	DK157	M		O					
209-48643- 18		1	DK157	M		O					
209-48643- 19		2	DK157	M		O					
209-48643- 21	114 - 46	2	DK157	M		O					
209-48643- 31	114 - 47	2	DK157	M		O					
209-48643- 41	114 - 48	2	DK157	M		O					
209-48643- 42	114	2	DK157	M		O					
209-48644- 3	114 - 34	2	BG277	M		O					
209-48644- 5	114 - 35	2	BG277	M		O					
209-48644- 7	114 - 36	2	BG277	M		O					
209-48644- 9	114 - 37	2	BG277	M		O					
209-48644- 11	114 - 38	2	BG277	M		O					
209-48644- 13	114 - 39	2	BG277	M		O					

PART NUMBER	FIGURE AND INDEX	TOTAL QTY.	MICRO-FILM NUMBER	MAINTENANCE CODE DATA: SOURCE CODE	INST'L CAPABILITY	PRE-INST'L CAPABILITY	RECOVERABILITY	SUPPORT EQUIPMENT	FEDERAL STOCK NUMBER DATA: COGNIZANCE CODE	FEDERAL STOCK NUMBER	MFG. CODE (TSMC)
209-48644- 15	114 - 40	2	BG277	M		0					
209-48647- 1	114 - 49	1	BG278	M		0					
209-48647- 2	114 - 50	1	BG278	M		0					
209-48649- 1	114 - 51	1	BG279	M		0					
209-48649- 2	114 - 52	1	BG279	M		0					
209-48650		1	BX164	M		0					
209-48650- 21	123 - 1	1									
209-48651- 1	115 - 1	1	BV 5	M		0					
209-48651- 2	115 - 2	1	BV 5	M		0					
209-48651- 3		1	BV 5	M		0					
209-48651- 4		1	BV 5	M		0					
209-48651- 5		1	BV 5	M		0					
209-48651- 6		1	BV 5	M		0					
209-48651- 7		20	BV 5	M		0					
209-48651- 13		1	BV 5	M		0					
209-48651- 14		1	BV 5	M		0					
209-48651- 15		1	BV 5	M		0					
209-48651- 16		1	BV 5	M		0					
209-48651-101	115	1	BV 5	M		0					
209-48651-102	115	1	BV 5	M		0					
209-48652- 1	115 - 3	1	CY 51	M		0					
209-48652- 3	115 - 4	1	CY 51	M		0					
209-48653- 1	115 - 5	1	BV 4	M		0					
209-48653- 2	115 - 6	1	BV 4	M		0					
209-48653- 3		1	BV 4	M		0					
209-48653- 4		1	BV 4	M		0					
209-48653- 5		2	BV 4	M		0					
209-48653- 7		2	BV 4	M		0					
209-48653- 9		2	BV 4	M		0					
209-48653- 11		2	BV 4	M		0					
209-48653- 13		2	BV 4	M		0					
209-48654	115 - 7	1	BX181	M		0					
209-48654- 7		1	BX181	M		0					
209-48654- 11		4	BX181	M		0					
209-48654- 13		1		M		0					
209-48654- 15		2	BX181	M		0					
209-48654- 17		2	BX181	M		0					
209-48654- 19		1	BX181	M		0					
209-48654- 21	115 - 7	1	BX181	M		0					
209-48655	115 - 8	1	BV 1	M		0					
209-48655- 3		1	BV 1								
209-48655- 5		1	BV 1								
209-48655- 7		1	BV 1	M		0					
209-48655- 9		2	BV 1								
209-48655- 11		4	BV 1	M		0					
209-48655- 13		1	BV 1	M		0					
209-48655- 15		2	BV 1	M		0					
209-48655- 17		1	BV 1	M		0					
209-48655- 21	115 - 8	1	BV 1	M		0					
209-48656- 1	115 - 9	1	BV 85	M		0					
209-48656- 2	115 - 10	1	BV 85	M		0					
209-48656- 3		1	BV 85	M		0					
209-48656- 4		1	BV 85	M		0					
209-48656- 5		1	BV 85	M		0					
209-48656- 7		1	BV 85	M		0					
209-48656- 9		1	BV 85	M		0					
209-48656- 11		2	BV 85	M		0					
209-48656- 13		2	BV 85	M		0					
209-48656- 15		1	BV 85	M		0					
209-48656- 16		1	BV 85	M		0					
209-48656- 17		1	BV 85	M		0					
209-48656- 18		1	BV 85	M		0					
209-48656- 19		2	BV 85	M		0					
209-48656- 31	115 - 11	1	BV 85	M		0					
209-48657	115 - 12	1	BV 50	M		0					
209-48657- 3		1	BV 50	M		0					
209-48657- 5		1	BV 50	M		0					
209-48658- 1		1	BG281	M		0					
209-48658- 2		1	BG281	M		0					
209-48659- 1		1	BG282	M		0					
209-48659- 2		1	BG282	M		0					
209-48660- 1		1	BV 86	M		0					
209-48660- 2		1	BV 86	M		0					
209-48661- 1	115 - 13	1	BV 81	M		0					
209-48661- 2	115 - 14	1	BV 81	M		0					
209-48661- 3		1	BV 81	M		0					
209-48661- 4		1	BV 81	M		0					
209-48661- 5		1	BV 81	M		0					
209-48661- 7		1	BV 81	M		0					
209-48661- 8		1	BV 81	M		0					
209-48661- 9		1	BV 81	M		0					
209-48661- 11	115 - 15	1	BV 81	M		0					
209-48661- 13		2	BV 81	M		0					
209-48661- 15		2	BV 81	M		0					
209-48661- 17		1	BV 81	M		0					
209-48661- 18		1	BV 81	M		0					
209-48661- 19		1	BV 81	M		0					
209-48661- 20		1	BV 81	M		0					
209-48661- 23		1	BV 81	M		0					
209-48661- 24		1	BV 81	M		0					
209-48661- 25		1	BV 81	M		0					
209-48661- 27		2	BV 81	M		0					
209-48661- 29		2	BV 81	M		0					
209-48662- 1	115 - 16	1	BV 77	M		0					
209-48662- 2	115 - 17	1	BV 77	M		0					
209-48662- 3		1	BV 77	M		0					
209-48662- 4		1	BV 77	M		0					
209-48662- 5		1	BV 77	M		0					
209-48662- 7		2	BV 77	M		0					
209-48662- 9		2	BV 77	M		0					
209-48662- 11	115 - 18	1	BV 77	M		0					
209-48662- 13		1	BV 77	M		0					
209-48662- 15		2	BV 77	M		0					
209-48662- 17		1	BV 77	M		0					
209-48662- 19		1	BV 77	M		0					
209-48662- 20		1	BV 77	M		0					
209-48662- 21		1	BV 77	M		0					
209-48662- 22		1	BV 77	M		0					
209-48662- 23		1	BV 77	M		0					
209-48662- 24		1	BV 77	M		0					
209-48662- 25		1	BV 77	M		0					
209-48662- 27		1	BV 77	M		0					
209-48662- 28		1	BV 77	M		0					
209-48662- 29		1	BV 77	M		0					
209-48662- 31		4	BV 77	M		0					
209-48663- 1	115 - 19	1	BL 85	M		0					
209-48663- 2	115 - 20	1	BL 85	M		0					
209-48663- 3		1	BL 85	M		0					
209-48663- 4		1	BL 85	M		0					
209-48663- 5		2	BL 85	M		0					
209-48663- 7		2	BL 85	M		0					
209-48664- 1	115 - 21	1	BV 74	M		0					
209-48664- 2	115 - 22	1	BV 74	M		0					
209-48664- 3		1	BV 74	M		0					
209-48664- 4		1	BV 74	M		0					
209-48664- 5		2	BV 74	M		0					
209-48664- 7		2	BV 74	M		0					
209-48664- 9		2	BV 74	M		0					
209-48664- 13		2	BV 74	M		0					
209-48664- 15		2	BV 74	M		0					
209-48701-101		1	DQ 60	U							
209-48702		2	DS 23								
209-48702- 3		2	DS 23								
209-48703		1	DP160								
209-48703- 3		1	DP160								
209-48704		2	BG283	M		0					
209-48705	195 - 1	1	BL 86	P1	F	0	S		R	1560-031-5107	ANAA
209-48707- 1		1	DP 82								
209-48707- 2		1	DP 82								
209-48707- 3		1	DP 82								
209-48707- 4		1	DP 82								
209-48707- 5		1	DP 82								
209-48707- 6		1	DP 82								
209-48707- 7		2	DP 82								
209-48707- 11		1	DP 82								
209-48707- 12		1	DP 82								
209-48708	195 - 89	4	DK144	M		0					
209-48709- 1	195 - 58	1	BV 79	X2							
209-48709- 2	195	1	BV 79	X2							
209-48709- 11	195	1	BV 79	X2							
209-48709- 12	195	1	BV 79	X2							
209-48710	196 - 98	1	BL 88	M		0					
209-48710- 3		1	BL 88	M		0					
209-487101	196 - 17	1	DP 84	A		F					
209-487102	196 - 23	1	DP162	M		0					
209-487103	196 - 24	1	DP138	P1	F	0	S		R	1560-697-8427	ANAA
209-487103- 11	196 - 24	1	DP138	P1	F	0	S		R	1560-535-9676	ANAA
209-487104	196 - 22	1	DP 85	P1					R	1560-569-5219	ANAA
209-487105	196 - 58	1	BL 91	M		0					
209-487105- 3		1	BL 91	M		0					
209-487106	196 - 42	1	DP 86	M		0					
209-487107	196 - 12	1	BD274	M		0					
209-487108	196 - 7	1	DN218	P1	F	0	S		R	1560-697-8429	ANAA
209-487108- 3	196 - 8	1									
209-487109	196 - 1	1	DN219	A		F					
209-487109- 11	196 - 2	1	DN219	A		F					
209-487109- 21	196 - 2	1		A		0					
209-48711	195 - 46	1	CA107	M		0					
	196 - 51										
	196 - 70										
209-48711- 3		1	BN142	M		0					
209-487110	196 - 51	1									
209-487110- 3		1	CA107	M		0					
209-487111	195 - 40	1	BD276	M		0					
209-487111- 3		1	BD276	M		0					
209-487112	195 - 35	1	BD277	M		0					
209-487112- 3		1	BD277	M		0					
209-487113	195 - 42	1	BL 95	M		0					
209-487113- 3		1	BL 95	M		0					
209-487113- 5		1	BL 95	M		0					
209-487114	195 - 7	1	BG431	M		0					
209-487115		1	BL 96	M		0					
209-487115- 3		1	BL 96	M		0					
209-487116	195 -114	1	BL 97	M		0					
	196 - 98										
209-487116- 3		1	BL 97	M		0					
209-487117	195 -104	1	BD278	M		0					
209-487118	195 -103	1	BG286	M		0					
209-48712- 5		1	BL 98	M		0					
209-48712- 11	195 - 92	1	BL 98	M		0					
	196 - 89										
209-487120	195 - 98	1	BG287	M		0					
209-487121	195	1	BD279	M		0					
209-487121- 3		1	BD279	M		0					
209-487122- 3	195 - 94	1		P	F	0	S		R	1560-694-8016	ANAA
209-487122- 13		1		M		0					
209-487123	195 -102	1	BD280	M		0					
209-487124	195 -101	1	BG288	M		0					
209-487125	196 - 11	1	BL286	P	F	0	C		R	1560-569-5222	ANAA
209-487125- 3	196 - 11	1		P	F	0	C		R	1560-613-4926	ANAA
209-487126	196 - 66	1		M		0					
209-487126- 3		1		M		0					
209-487127	196 - 52	1		M		0					
209-487127- 3		1		M		0					
209-487128	196 - 64	2		M		0					
209-487128- 3		2		M		0					
209-487128- 5		4		M		0					
209-487129	196	2		M		0					
209-48713	195 - 48	1	DK 83	M		0					
	196 - 74										

PART NUMBER	FIGURE AND INDEX	TOTAL QTY.	MICRO-FILM NUMBER	MAINTENANCE CODE DATA: SOURCE CODE	INSTL CAPABILITY	PRE-INSTL CAPABILITY	RECOVERABILITY	SUPPORT EQUIPMENT	COGNIZANCE CODE	FEDERAL STOCK NUMBER DATA: FEDERAL STOCK NUMBER	MFG. CODE (TSMC)
209-48713- 9		1	DK 63	M		O					
209-487130	112 - 54	2		M		O					
	195 - 59										
209-487132	195	2		M		O					
209-487133	195	2		M		O					
209-487134	195	1		M		O					
209-487136	196 - 67	2		M		O					
209-487137	196 - 40	1	DP 2	M		O					
209-487138	196 - 43	1	DS 68	M		O					
209-487139	196 - 25	1	DP 3	P1		O	S		R	1560-574-6065	ANAA
209-48714	195 -118	1	BL101	M		O					
	196 -101										
209-48714- 9		1	BL101	M		O					
209-487140	196 - 39	1	DP 4	P1	O	O	S		R	1560-587-2427	ANAA
209-487141		1	DP 11	A		F					
209-487141- 11	196 - 18	1		A		F					
209-487142	195	1	DR 45	M		O					
209-487143	195	1	DR 46	M		O					
209-48715- 1	195 - 55	1	BV 51	M		O					
209-48715- 2	195	1	BV 51	M		O					
209-48715- 3		1	BV 51	M		O					
209-48715- 4		1	BV 51	M		O					
209-48715- 5		1	BV 51	M		O					
209-48715- 6		1	BV 51	M		O					
209-48715- 7		1	BV 51	M		O					
209-48715- 8		1	BV 51	M		O					
209-48715- 9		1	BV 51	M		O					
209-48715- 10		1	BV 51	M		O					
209-48715- 11		1	BV 51	M		O					
209-48715- 12		1	BV 51	M		O					
209-48717- 1	195 - 51	1	BV 82	M		O					
	196 - 77										
209-48717- 2	195	1	BV 82	M		O					
	196 - 78										
209-48717- 3		1	BV 82	M		O					
209-48717- 4		1	BV 82	M		O					
209-48717- 5		1	BV 82	M		O					
209-48717- 6		1	BV 82	M		O					
209-48717- 7		2	BV 82	M		O					
209-48717- 11		1	BV 82	M		O					
209-48717- 12		1	BV 82	M		O					
209-48718		1	BD281								
209-48718- 9		1	BD281								
209-48719		1	DP161								
209-48719- 9		1	DP161								
209-48720		2	BG289	M		O					
209-48721		2	BG290	M		O					
209-48722		1	BL102	M		O					
209-48722- 11		2	BL102	M		O					
209-48723		2	BG291								
209-48724		1	BG292								
209-48725- 1	195 - 57	1	BL103	X2							
209-48725- 2	195	1	BL103	X2							
209-48726	195 - 49	1	BG295	M		F					
	196 - 76										
209-48727	195 - 50	1	BD283	M		F					
	196 - 75										
209-48730		1	DJ211								
209-48730- 1	195 - 54	1	BL104	M		O					
209-48730- 2	195	1	BL104	M		O					
209-48730- 3		1	BL104	M		O					
209-48730- 4		1	BL104	M		O					
209-48730- 5		1	BL104	M		O					
209-48730- 6		1	BL104	M		O					
209-48730- 7		2	BL104	M		O					
209-48730- 11		1	BL104	M		O					
209-48730- 12		1	BL104	M		O					
209-48732	195 - 44	2	BD284	M		O					
209-48732- 9		2	BD284	M		O					
209-48733	195 - 47	1	BD285	M		O					
209-48733- 3		1	BD285	M		O					
209-48734	195 - 93	1	BS129	M		O					
209-48734- 3		1	BS129	M		O					
209-48745- 1	195	1	BL105	P1	O	O	S		R	1560-569-5224	ANAA
209-48745- 2	195	1	BL105	P1	O	O	S		R	1560-569-5232	ANAA
209-48746	195	1	BY270	M		O					
209-48747	195 -121	1	BD288	M		O					
209-48747- 3		1	BD288	M		O					
209-48750	195 -107	1	DQ102								
209-48750- 3	195	1	DQ102	M		O					
209-48750- 5	195	1	DQ102	M		O					
209-48750- 11	195 -108	1	DQ102	M		O					
209-48751		1	DP248	U							
209-48762	196 - 86	2	BD289	M		O					
209-48767	196 - 68	2	DR 43	M		O					
209-48767- 3		2	DR 43	M		O					
209-48768- 1	196 - 81	1	DK158	M		O					
209-48768- 2	196	1	DK158	M		O					
209-48769		2	DK113	M		O					
209-48769- 1	196 - 83	1	DK113								
209-48769- 11	196 - 82	2	DK113	M		O					
209-48770- 1	196 - 85	1	BL107	M		O					
209-48770- 2	196	1	BL107	M		O					
209-48770- 3		1	BL107	M		O					
209-48770- 4		1	BL107	M		O					
209-48770- 5		2	BL107	M		O					
209-48770- 6		1	BL107	M		O					
209-48773- 1	196 - 80	2	BL108	M		O					
209-48773- 2	196	1	BL108	M		O					
209-48773- 11		1	BL108	M		O					
209-48776	196 - 61	2	CA111	M		O					
209-48776- 5		1	CA111	M		O					
209-48780	196 - 69	1	DN 75	M		O					
209-48780- 3		1	DN 75	M		O					
209-48781- 1	10 - 63	2		M		O					

PART NUMBER	FIGURE AND INDEX	TOTAL QTY.	MICRO-FILM NUMBER	MAINTENANCE CODE DATA: SOURCE CODE	INSTL CAPABILITY	PRE-INSTL CAPABILITY	RECOVERABILITY	SUPPORT EQUIPMENT	COGNIZANCE CODE	FEDERAL STOCK NUMBER DATA: FEDERAL STOCK NUMBER	MFG. CODE (TSMC)
	196										
209-48781- 3	10	1		M		O					
209-48781- 5	10	2		M		O					
209-48781- 11	10 - 65	2									
	196										
209-48784		1	BD292	M		O					
209-48785	195	1	BL109	P1	F	O	S		R	1560-697-8430	ANAA
209-48786	195 - 17	1	DR 7	A		O					
209-48786- 3		1	DR 7	M		O					
209-48786- 4		1	DR 7	M		O					
209-48786- 11	195	1	DR 7	M		O					
209-48787		1	DR 44	M		O					
209-48788	195 - 34	1	BG296	M		O					
209-48789	195 - 22	1	DJ212	M		O					
209-48789- 3		1	DJ212	M		O					
209-48790	195 - 12	1	BG297	M		O					
209-48790- 3		1	BG297	M		O					
209-48791	195 - 11	1	BL113	M		O					
209-48792	195 - 10	1	BD294	M		O					
209-48793	195 - 26	1	BD295	M		O					
209-48794	195	1	BL114	M		O					
209-48795	195 - 9	1	BD296	M		O					
209-48796	195	1	BF439	M		O					
209-48797	195	1	BF440	M		O					
209-48798	195 - 8	1	BF441	M		O					
209-48799	195 - 36	1	DP 83	M		O					
209-48799- 3		1	BL115	M		O					
209-48801- 3		1	DJ155								
209-48801- 9	95	1	DJ155	M		O					
209-48801- 19		1	DJ155								
209-48801- 21	93 - 48	1	DJ155	M		F					
	223 - 2										
	350 - 62										
209-48801- 23	93 - 37	1	DJ155	M		F					
209-48801- 25	93 - 36	1	DJ155	M		F					
	95 - 34										
209-48801- 27	93 - 31	1	DJ155	M		F					
	94 - 29										
	95 - 29										
	97 - 24										
209-48801- 31	98 - 16	1	DJ155	M		O					
209-48801- 33	98 - 12	1	DJ155	M		O					
209-48801- 37	93 - 86	1	DJ155	M		F					
	94 - 90										
209-48801- 39	93 - 69	1	DJ155	M		F					
209-48801- 41	93 -143	1	DJ155	M		F					
209-48801- 43	93 -145	1	DJ155	M		F					
209-48801- 45	93 -113	1	DJ155	M		F					
	94 -101										
209-48801- 47	93 - 96	1	DJ155	M		F					
209-48801- 49	93 -104	1	DJ155	M		F					
209-48801- 51	93 -121	1	DJ155	M		F					
209-48801- 53	93 - 67	1	DJ155	M		F					
	350 - 30										
209-48801- 55	93 - 98	1	DJ155	M		F					
209-48801- 57		1	DJ155	M		F					
209-48801- 59	93 -102	1	DJ155	M		F					
209-48801- 61	93 -109	1	DJ155	M		F					
209-48801- 67		1	DJ155								
209-48801- 69		1	DJ155								
209-48801- 71	93 -108	1	DJ155	M		F					
209-48801- 73	93 -111	1	DJ155	M		F					
209-48801- 75	93 -125	1	DJ155	M		F					
209-48801- 77	93 -100	1	DJ155	M		F					
209-48801- 79		1	DJ155								
209-48801- 81		1	DJ155								
209-48801- 83	99 - 18	1	DJ155	M		O					
209-48801- 85		1	DJ155								
209-48801- 89	93 -147	1	DJ155	M		O					
	94 - 84										
209-48801- 91	93	1	DJ155	M		F					
209-48801- 93	93 -119	1	DJ155	M		F					
209-48801- 97	95 - 45	1	DJ155	M		O					
	97 - 40										
209-48801- 99	93	1	DJ155	M		F					
	94 - 35										
	95										
	97 - 29										
209-48801-103	98 - 26	1	DJ155	M		O					
	99 - 33										
	100 - 51										
209-48801-105	98 - 25	1	DJ155	M		O					
	99 - 32										
	100 - 48										
209-48801-107	95 - 76	1	DJ155	M		O					
	97 - 79										
209-48801-109		1	DJ155	M		O					
209-48801-111	95 - 56	1	DJ155	M		O					
	97 - 55										
209-48801-113	95 -162	1	DJ155	M		O					
209-48801-115	95 - 51	1	DJ155	M		O					
	97 - 48										
209-48801-117	93 - 61	1	DJ155	M		O					
	94 - 61										
	95 - 36										
	97 - 32										
209-48801-119		1	DJ155								
209-48801-121		1	DJ155	M		F					
209-48801-123		1	DJ155	M		F					
209-48801-125		1	DJ155	M		F					
209-48801-127		1	DJ155	M		F					
209-48801-129	104 - 57	1									
	105 - 56										
	111 - 10										
209-48801-131		1	DJ155	M		O					

PART NUMBER	FIGURE AND INDEX	TOTAL QTY.	MICRO-FILM NUMBER	MAINTENANCE CODE DATA: SOURCE CODE	INSTL CAPABILITY	PRE-INSTL CAPABILITY	RECOVERABILITY	SUPPORT EQUIPMENT	COGNIZANCE CODE	FEDERAL STOCK NUMBER DATA: FEDERAL STOCK NUMBER	MFG. CODE (TSMC)
209-48801-133		1	DJ155	M		O					
209-48801-135		1	DJ155								
209-48801-137		2	DJ155	M		F					
209-48801-139		1	DJ155	M		F					
209-48801-141		1	DJ155	M		F					
209-48801-143		1	DJ155	M		F					
209-48801-145		1	DJ155	M		F					
209-48801-147		1	DJ155	M		F					
209-48801-149		1	DJ155	M		F					
209-48801-151		1	DJ155	M		F					
209-48801-153		1	DJ155	M		F					
209-48801-155		1	DJ155	M		F					
209-48801-157		1	DJ155								
209-48801-159		1	DJ155	M		F					
209-48801-161		1	DJ155	M		F					
209-48801-163	98 - 19	1	DJ155	M		O					
	99 - 25										
	100 - 46										
209-48801-165	93 - 57	1	DJ155	M		O					
	94 - 57										
	95 - 35										
	97 - 30										
209-48801-167		1	DJ155								
209-48801-169		1	DJ155								
209-48801-171		1	DJ155	M		F					
209-48801-173		1	DJ155	M		F					
209-48801-177		1	DJ155	M		F					
209-48801-179		1	DJ155								
209-48801-181		1	DJ155								
209-48801-183		1	DJ155	M		O					
209-48801-185		1	DJ155								
209-48801-187		1	DJ155								
209-48801-189		1	DJ155	M		O					
209-48801-191		1	DJ155	M		F					
209-48801-193		1	DJ155	M		F					
209-48801-195	95 - 53	1	DJ155	M		O					
	97 - 50										
209-48801-199		1	DJ155	M		F					
209-48801-203	93 -106	1	DJ155	M		F					
209-48801-205	95 - 72	1	DJ155	M		O					
	97 - 72										
209-48801-207		1	DJ155								
209-48801-209		1	DJ155								
209-48801-211	100 - 60	2	DJ155	M		O					
	100 - 67										
209-48801-213		1	DJ155								
209-48801-215	100 - 65	1	DJ155	M		O					
209-48801-217	100 - 58	1	DJ155	M		O					
209-48801-219	100 - 63	1	DJ155	M		O					
209-48801-221	100 - 56	1	DJ155	M		O					
209-48801-227	93 -150	1	DJ155	M		O					
	94 - 46										
	223										
	350										
209-48801-229	93 -148	1	DJ155	M		O					
	94 - 36										
209-48801-231	350	1	DJ155	M		O					
209-48801-233		1	DJ155	M		F					
209-48801-235		1	DJ155	M		F					
209-48801-237		1	DJ155	M		F					
209-48801-239		1	DJ155	M		F					
209-48801-241	99 - 16	1	DJ155	M		O					
	102 - 13										
209-48801-243	95 -104	1	DJ155	M		F					
	107 - 4										
209-48801-245	93 -135	1	DJ155	M		F					
209-48801-247	93 -139	1	DJ155	M		F					
209-48801-249	95 -186	1	DJ155	M		F					
209-48801-253	93 -141	1	DJ155	M		O					
209-48801-255	93 -137	1	DJ155	M		O					
209-48801-257	93 -123	1	DJ155	M		O					
209-48801-261	97 - 73	1		M		O					
209-48801-303		1	DJ155	M		F					
209-48801-305		1	DJ155	M		O					
209-48801-307		1	DJ155								
209-48801-309		1	DJ155								
209-48801-311		2	DJ155	M		O					
209-48801-313		1	DJ155								
209-48801-315		1	DJ155	M		O					
209-48801-317		1	DJ155	M		O					
209-48801-319		1	DJ155	M		O					
209-48801-321		1	DJ155	M		O					
209-48801-322		1	DJ155								
209-48801-323	101 - 56	1	DJ155	M		O					
	102 - 35										
	103 - 18										
209-48801-325	102 - 39	1	DJ155	M		O					
209-48801-327		1	DJ155	M		O					
209-48801-329		1	DJ155	M		O					
209-48801-331		1	DJ155	M		O					
209-48801-333		1	DJ155	M		F					
209-48801-335		1	DJ155	M		F					
209-48801-337		1	DJ155	M		F					
209-48801-339		1	DJ155	M		F					
209-48801-341		1	DJ155	M		O					
209-48801-343		1	DJ155	M		O					
209-48801-345		1	DJ155	M		O					
209-48801-347		1	DJ155	M		O					
209-48801-349		1	DJ155	M		O					
209-48801-351	95 - 51	1	DJ155	M		O					
	97 - 48										
209-48801-353		1	DJ155	M		F					
209-48801-355		1	DJ155	M		F					
209-48801-357		1	DJ155	M		F					
209-48801-359	98 - 25	1	DJ155	M		O					

PART NUMBER	FIGURE AND INDEX	TOTAL QTY.	MICRO-FILM NUMBER	MAINTENANCE CODE DATA: SOURCE CODE	INSTL CAPABILITY	PRE-INSTL CAPABILITY	RECOVERABILITY	SUPPORT EQUIPMENT	COGNIZANCE CODE	FEDERAL STOCK NUMBER DATA: FEDERAL STOCK NUMBER	MFG. CODE (TSMC)
	99 - 32										
	100 - 48										
209-48801-361		1	DJ155	M		O					
209-48802- 2	112 - 6	2	DJ172	M		O					
209-48802- 3	93 -127	1	DJ172	M		O					
209-48802- 4		1	DJ172	M		O					
209-48802- 5	98 - 17	1	DJ172	M		O					
209-48802- 6		1	DJ172	M		O					
209-48802- 7	98 - 15	1	DJ172	M		O					
209-48802- 8		1	DJ172	M		O					
209-48802- 9	93 -117	1	DJ172	M		O					
209-48802- 10		1	DJ172	M		O					
209-48802- 11	99 - 24	1	DJ172	M		O					
209-48802- 12		1	DJ172	M		O					
209-48802- 13	93 -129	1	DJ172	M		O					
209-48802- 14		1	DJ172	M		O					
209-48802- 15	93 -119	1	DJ172	M		O					
209-48802- 16		1	DJ172	M		O					
209-48802- 25		1	DJ172	M		O					
209-48802- 26		1	DJ172	M		O					
209-48802- 27		1	DJ172	M		O					
209-48802- 28		1	DJ172	M		O					
209-48802- 29	100 - 40	1	DJ172								
209-48802- 30		1	DJ172	M		O					
209-48802- 31	100 - 16	1	DJ172	M		O					
209-48802- 32		1	DJ172	M		O					
209-48802- 34	100 - 41	2	DJ172	M		O					
209-48802- 35	100 - 42	1	DJ172	M		O					
209-48802- 36		1	DJ172	M		O					
209-48802- 37	100 - 18	1	DJ172								
209-48802- 39		1	DJ172	M		O					
209-48802- 40		1	DJ172	M		O					
209-48802- 41	94 -148	1	DJ172	M		O					
209-48802- 42		1	DJ172	M		O					
209-48802- 43	94 -133	1	DJ172	M		O					
209-48802- 44		1	DJ172	M		O					
209-48802- 45	94 -137	1	DJ172	M		O					
209-48802- 46		1	DJ172	M		O					
209-48802- 47	94 -138	1	DJ172	M		O					
209-48802- 48		1	DJ172	M		O					
209-48802- 49	94 -142	1	DJ172	M		O					
209-48802- 50		1	DJ172	M		O					
209-48802- 51	94 -146	1	DJ172	M		O					
209-48802- 52		1	DJ172	M		O					
209-48802- 53	94 -147	1	DJ172	M		O					
209-48802- 54		1	DJ172	M		O					
209-48802- 55		1	DJ172								
209-48802- 56	100 - 17	1	DJ172								
209-48802- 57	100 - 39	1	DJ172	M		O					
209-48802- 58		1	DJ172	M		O					
209-48802- 60	100 - 15	1	DJ172	M		O					
209-48802- 62	101 - 59	1	DJ172	M		O					
	103 - 11										
	103 - 21										
209-48802- 63	94 -135	1	DJ172	M		O					
209-48802- 64		1	DJ172	M		O					
209-48802- 65	94 -144	1	DJ172	M		O					
209-48802- 66		1	DJ172	M		O					
209-48802- 67	100 - 38	1	DJ172	M		O					
	101 - 24										
209-48802- 69	94 -140	1	DJ172	M		O					
209-48802- 70		1	DJ172	M		O					
209-48802-162		1	DJ172								
209-48803- 3	95 - 61	1	DS 69	M		O					
	97 - 61										
	358										
209-48803- 4		1	DS 69	M		O					
209-48803- 5	95 - 65	1	DS 69	M		F					
	97 - 65										
209-48803- 6		1	DS 69	M		F					
209-48803- 7	95 - 67	1	DS 69	M		F					
	97 - 67										
	358										
209-48803- 8		1	DS 69	M		F					
209-48803- 9	95 - 69	1	DS 69	M		F					
	358										
209-48803- 10		1	DS 69	M		F					
209-48803- 12	95 - 78	1	DS 69	M		O					
	97 - 81										
	358										
209-48803- 15	97 - 69	1	DS 69	M		O					
209-48803- 16		1	DS 69	M		O					
209-48803- 18	97 - 82	1	DS 69	M		O					
209-48804	98 - 23	1		M		O					
	99 - 28										
	100 - 53										
	358										
209-48805	95 - 63	1	BV 7	X1							
	97 - 63										
209-48805-101		1	BV 7								
209-48806	95	1	BV 80	X1							
	97										
209-48806- 3		1	BV 80	X1							
209-48806- 5		1	BV 80	X1							
209-48806- 11		1	BV 80								
209-48806- 13		1	BV 80								
209-48807	95 - 58	1	BL116	M		O					
	97 - 57										
	358 - 1										
209-48808	95 - 60	1	BL117	M		O					
	97 - 59										
	358										
209-48808- 3		1	BL117	M		O					
209-48808- 5		1	BL117	M		O					
209-48808- 7		1	BL117	M		O					

PART NUMBER	FIGURE AND INDEX	TOTAL QTY.	MICRO-FILM NUMBER	MAINTENANCE CODE DATA: SOURCE CODE	INSTL CAPABILITY	PER-INSTL CAPABILITY	RECOVERABILITY	SUPPORT EQUIPMENT	COGNIZANCE CODE	FEDERAL STOCK NUMBER DATA: FEDERAL STOCK NUMBER	MFG. CODE (TSMC)
209-48809	95	1	BL118	M		O					
	97										
209-48810	95 - 62	1	BL 10	M		O					
	97 - 62										
209-48811	95 -117	1	BL119	P	F	O	C		R	1560-569-5247	ANAA
	97 -119										
209-48811- 3		1	BL119	M		O					
209-48811- 5		1	BL119	M		O					
209-48811- 7		2	BL119	M		O					
209-48811- 9		1	BL119	M		O					
209-48811- 11		1	BL119	M		O					
209-48811- 13		2	BL119	M		O					
209-48811- 21		1	BL119								
209-48811- 23		1	BL119								
209-48812	95 - 77	1	CA174	M		O					
	97 - 80										
	358										
209-48812- 9		1	CA174	M		O					
209-48812- 11		1	CA174	M		O					
209-48812- 13		1	CA174	M		O					
209-48812- 15		1	CA174	M		O					
209-48813- 3		1	DH284	M		F					
209-48813- 4		1	DH284	M		F					
209-48813-103		1	DH284	M		F					
209-48813-104		1	DH284	M		F					
209-48817	10 - 73	2	DP139	A		F					
	100										
209-48817- 3	10	2	BG298	P1	F	O	S		R	1560-511-2298	ANAA
209-48819	95	1									
	95 -188	1	DR 67	M		O					
	97 -205										
209-48819- 3		1	DR 67	M		O					
209-48819- 5		1	DR 67	M		O					
209-48819- 7		1	DR 67	M		O					
209-48819- 11	95 -188	1	DR 67								
		1	DR 67	M		O					
209-48819- 21	95	1									
	95 -188	1									
		1	DR 67	M		O					
209-48819D- 11		1									
209-48821- 1	94 - 71	1	DP 28	M		O					
209-48821- 2		1	DP 28	M		O					
209-48821- 3	94 - 66	1	DP 28	M		O					
209-48821- 4		1	DP 28	M		O					
209-48821- 5	94 - 89	1	DP 28	M		O					
209-48821- 6		1	DP 28	M		O					
209-48821- 7	94 - 88	1	DP 28	M		O					
209-48821- 8		1	DP 28	M		O					
209-48821- 13	94 - 99	1	DP 28	M		O					
209-48821- 14		1	DP 28	M		O					
209-48821- 15	94 - 75	1	DP 28	M		O					
209-48821- 16		1	DP 28	M		O					
209-48821- 19	94 - 94	1	DP 28	M		O					
209-48821- 20		1	DP 28	M		O					
209-48821- 23	94 - 95	1	DP 28	M		O					
209-48821- 24		1	DP 28	M		O					
209-48821- 25	94 -110	1	DP 28	M		O					
209-48821- 26		1	DP 28	M		O					
209-48821- 27	94 -105	1	DP 28	M		O					
209-48821- 28		1	DP 28	M		O					
209-48821- 31	94 -108	1	DP 28	M		O					
209-48821- 32		1	DP 28	M		O					
209-48821- 33	94 -111	1	DP 28	M		O					
209-48821- 34		1	DP 28	M		O					
209-48821- 35	94 -109	1	DP 28	M		O					
209-48821- 36		1	DP 28	M		O					
209-48821- 37	94 - 70	1	DP 28	M		O					
209-48821- 38		1	DP 28	M		O					
209-48821- 39	94 - 76	1	DP 28	M		O					
209-48821- 40		1	DP 28	M		O					
209-48821- 41	94 - 98	1	DP 28	M		O					
209-48821- 42		1	DP 28	M		O					
209-48821- 43	94 -104	1	DP 28	M		O					
209-48821- 44		1	DP 28	M		O					
209-48821- 47	94 - 91	1	DP 28	M		O					
209-48821- 48		1	DP 28	M		O					
209-48821- 49	94 - 92	1	DP 28	M		O					
209-48821- 50		1	DP 28	M		O					
209-48821- 51	94 - 96	1	DP 28	M		O					
209-48821- 52		1	DP 28	M		O					
209-48821- 53	100 - 13	1	DP 28	M		O					
	103 - 8										
209-48821- 54		1	DP 28	M		O					
209-48821- 55	94 - 86	1	DP 28	M		O					
209-48821- 56		1	DP 28	M		O					
209-48821- 57	94 - 87	1	DP 28	M		O					
209-48821- 58		1	DP 28	M		O					
209-48821- 59	97 -201	1	DP 28	M		O					
	107										
	108 - 4										
209-48821- 60		1	DP 28	M		O					
209-48821- 61	94 -113	1	DP 28	M		O					
209-48821- 62		1	DP 28	M		O					
209-48821- 63	94 - 81	1	DP 28	M		O					
209-48821- 64		1	DP 28	M		O					
209-48821- 65	94 - 78	1	DP 28	M		O					
209-48821- 66		1	DP 28	M		O					
209-48821- 67	97 -203	1	DP 28	M		O					
	107										
	108										
209-48821- 68		1	DP 28	M		O					
209-48821- 69		1	DP 28	M		O					
209-48821- 70		1	DP 28	M		O					
209-48821- 71	94 -103	1	DP 28	M		O					
209-48821- 72		1	DP 28	M		O					
209-48821- 73	94 -114	1	DP 28	M		O					
209-48821- 74		1	DP 28	M		O					
209-48821- 75	94 -117	1	DP 28	M		O					
209-48821- 76		1	DP 28	M		O					
209-48821- 77	94 -120	1	DP 28	M		O					
209-48821- 78		1	DP 28	M		O					
209-48821- 79	94 -121	1	DP 28	M		O					
	100 - 72										
209-48821- 80		1	DP 28	M		O					
209-48821- 81	94 -122	1	DP 28	M		O					
	100 - 62										
209-48821- 82		1	DP 28	M		O					
209-48821- 83	93 - 56	1	DP 28	M		O					
	94 - 53										
209-48821- 84		1	DP 28	M		O					
209-48821- 85	93 - 55	1	DP 28	M		O					
	94 - 56										
209-48821- 86		1	DP 28	M		O					
209-48821- 88	103 - 15	1	DP 28	M		O					
209-48821-156		1	DP 28								
209-48832-121	113 - 60	2									
209-48832-131	113 - 61	1									
209-48832-141	113 - 62	2									
209-48832-151	113 - 63	2									
209-48832-161	113 - 64	2									
209-48832-171	113 - 65	1									
209-48901	120	1									
209-48901- 11	120	1									
209-48910	120 - 1	1									
209-48911	120 - 2	1									
209-48911- 11	120	1									
209-50138		1		M		O					
209-50801- 19		1	BS 83	M		F					
209-50801- 31		1	BS 83	M		F					
209-50801- 47		1	BS 83	M		F					
209-50801- 51		1	BS 83	M		F					
209-50801- 57		1	BS 83	M		F					
209-50801- 65		1	BS 83	M		F					
209-50801- 71		1	BS 83	M		F					
209-50801- 73		1	BS 83	M		F					
209-50801- 77		1	BS 83	M		F					
209-50801- 79		1	BS 83	M		F					
209-50801- 83		1	BS 83	M		F					
209-50801- 85		1	BS 83	M		F					
209-50802- 7		1	BT 95	M		F					
209-50802- 23		1	BT 95	M		F					
209-50802- 39		1	BT 95	M		F					
209-51001		1	BV 76	U							
209-51002		1	BY 52	U							
209-51003	315 - 1	1	CV137	M		O					
209-51003- 3		1	CV137	M		O					
209-51003- 5		2	CV137	M		O					
209-51003- 7		1	CV137	M		O					
209-51003- 9		1	CV137	M		O					
209-51003- 11	315 - 2	1	CV137	M		O					
209-51003- 13		1	CV137	M		O					
209-51003- 15		1	CV137	M		O					
209-51003- 17		1	CV137	M		O					
209-51003- 21	315 - 3	1	CV137	M		O					
209-51003- 31	315 - 4	1	CV137	M		O					
209-51003- 5		2	CV137	M		O					
209-51004	274 - 1	1	BV 78	M		O					
209-51004- 17		1	BV 78	M		O					
209-51004- 31		1	BV 78	M		O					
209-51004- 33		1	BV 78	M		O					
209-51004- 35		1	BV 78	M		O					
209-51004- 37		2	BV 78	M		O					
209-51004- 39		1	BV 78	M		O					
209-51004- 40		1	BV 78								
209-51004- 42		1	BV 78	M		O					
209-51005	209										
	210										
	211 - 6										
	219 -131										
	221										
	229 - 45										
	224										
	233 - 3										
	233A- 1	1									
	239										
	240										
	242										
	243										
	245										
	247 - 5										
	248										
	251										
	252										
	253										
	255										
	256										
	257										
	260										
	265 - 5										
	270										
	273 - 3										
	276										
	277										
	288 - 3										
	290										
	291										
	315										
	207 - 21	1	CV132	A		F					
209-51005-101	315	1	CV132	A		F					
209-51005-201	315	1	CV132	A		F					

PART NUMBER	FIGURE AND INDEX	TOTAL QTY.	MICRO-FILM NUMBER	MAINTENANCE CODE DATA: SOURCE CODE	INST'L CAPABILITY	PRE-INST'L CAPABILITY	RECOVERABILITY	SUPPORT EQUIPMENT	FEDERAL STOCK NUMBER DATA: COGNIZANCE CODE	FEDERAL STOCK NUMBER	MFG. CODE (TSMC)
209-51005-301	315	1	CV132	A		F					
209-51005-401	315	1	CV132	A		F					
209-51005-501	315	1	CV132								
209-51006		1									
209-51009	274 - 12	2	BG299	M		O					
209-51010	315 - 24	2	CV 7	P1	F	O	C		R	5355-667-9574	ANAA
	318 - 18										
209-510101	219 - 18	1	CE 45	X1							
209-510101- 3	219 - 5	1	CE 45	X1							
209-510102- 1	247	2	BD298	M		F					
209-510102- 11	247 - 29	2	BD298	M		F					
209-510103	317 - 22	1	CV 72	M		O					
209-510103- 3		1	CV 72	M		O					
209-510103- 5		8	CV 72	M		O					
209-510103- 7		1	CV 72	M		O					
209-510103- 11	317	1	CV 72	M		O					
209-510104- 5		1	BV 83	M		O					
209-510104- 7		1	BV 83	M		O					
209-510104- 9		1	BV 83	M		O					
209-510106		1	DH144								
209-510107	318 - 1	1	CV120	M		O					
209-510107- 3		1	CV120	M		O					
209-510107- 5		1	CV120	M		O					
209-510107- 7		1	CV120	M		O					
209-510107- 11		1	CV120	M		O					
209-510107- 21	318 - 2	1	CV120	M		O					
209-510107- 23		1	CV120	M		O					
209-510108	208 - 19	1		A		F					
	209										
	210										
	211										
	219										
	221										
	223										
	224										
	233										
	233A	1									
	235 - 57										
	239										
	240										
	242										
	245										
	247										
	248										
	251										
	253										
	255										
	256										
	257										
	260										
	265 - 3										
	273										
	276										
	277										
	278										
	286										
	290										
	318										
209-510108- 11	318	1		A		F					
209-510109	318 - 6	1		P1	F	O	C		R	1560-534-4112	ANAA
209-51011	208 - 24										
	207 - 25	1	CP 13	P1	F	O	C				
	318 - 16	1							R	1560-369-5319	ANAA
209-510111	318 - 26	1		P1	F	O	C		R	1560-534-4113	ANAA
209-510112	318 - 24	1		P1	F	O	C		R	1560-534-4114	ANAA
209-510114	318 - 9	1		P1	F	O	C		R	1560-570-2281	ANAA
209-510117	273	1		A		O					
	355 - 78										
	PG. 1016										
	PG. 1025										
209-510119	265 - 7	1									
	318 - 48										
209-510120	316 - 27	1							R	1560-588-6986	ANAA
209-510121	318 - 25	1							R	1560-588-3547	ANAA
209-510123	314	1									
209-510124	314	1									
209-51014- 1	357	1	BV 2								
209-51014- 2	357	1	BV 2	U							
209-51015		1	BY241	U							
209-51016- 1		1	CV127	U							
209-51016- 2		1	CV127	U							
209-51017- 1		1	CM196	M		O					
209-51017- 2		1	CM196	M		O					
209-51017- 3		4	CM196	M		O					
209-51017- 5		2	CM196	M		O					
209-51017- 7		2	CM196	M		O					
209-51017- 9		2	CM196	M		O					
209-51017- 11		4	CM196								
209-51018	315 - 21	1	CV 29	P1	F	O	C		R	1560-031-5108	ANAA
209-51018- 3	315 - 22	1	CV 29	P1	F	O	C		R	1560-508-6838	ANAA
209-51020- 33		1	BV 8	M		O					
209-51020- 34		1	BV 8	M		O					
209-51020- 35		1	BV 8	M		O					
209-51020- 36		1	BV 8	M		O					
209-51022- 15		2	BV 6	M		O					
209-51022- 17		6	BV 6	M		O					
209-51022- 25		2	BV 6	M		O					
209-51022- 27		2	BV 6	M		O					
209-51022- 29		1	BV 6	M		O					
209-51022- 31		1	BV 6	M		O					
209-51022- 41		1	BV 6	M		O					
209-51022- 42		1	BV 6	M		O					
209-51022- 51		1	BV 6	M		O					
209-51022- 52		1	BV 6	M		O					
209-51023- 17		2	BV 9	M		O					

PART NUMBER	FIGURE AND INDEX	TOTAL QTY.	MICRO-FILM NUMBER	MAINTENANCE CODE DATA: SOURCE CODE	INST'L CAPABILITY	PRE-INST'L CAPABILITY	RECOVERABILITY	SUPPORT EQUIPMENT	FEDERAL STOCK NUMBER DATA: COGNIZANCE CODE	FEDERAL STOCK NUMBER	MFG. CODE (TSMC)
209-51023- 27		1	BV 9	M		O					
209-51023- 28		1	BV 9	M		O					
209-51023- 29		2	BV 9	M		O					
209-51023- 31		1	BV 9	M		O					
209-51023- 32		1	BV 9	M		O					
209-51023- 33		1	BV 9	M		O					
209-51023- 34		1	BV 9	M		O					
209-51025- 23		1	BV144								
209-51025- 24		1	BV144	M		O					
209-51025- 25		2	BV144	M		O					
209-51025- 27		2	BV144	M		O					
209-51027	315 - 19	1	CV 27	P1	F	O	C		R	1560-031-5109	ANAA
209-51027- 11	318 - 14	1	CV 27	P1		O	C		R	1560-586-4583	ANAA
209-51028	219	2	BT123	M		O					
209-51031		1	DJ144	U							
209-51032		1	BV290	U							
209-51033		1	CV 5	M		O					
209-51033- 3		1	CV 5	M		O					
209-51034	315 - 86	1	DP163	M		O					
209-51034- 3		1	DP163	M		O					
209-51035	276 - 9	1	BL273	M		O					
209-51035- 9		1	BL273	M		O					
209-51035- 10		1	BL273	M		O					
209-51035- 15		1	BL273	M		O					
209-51035- 17		1	BL273	M		O					
209-51035- 19		1	BL273	M		O					
209-51035- 21		1	BL273	M		O					
209-51035- 23		1	BL273	M		O					
209-51035- 25		1	BL273	M		O					
209-51036		5	BL 11	M		O					
209-51036- 3		5	BL 11	M		O					
209-51037	315 - 82	1	BF442	M		O					
209-51039	315 - 59	1	BP 54	M		O					
209-51039- 3		1	BP 54	M		O					
209-51039- 5		1	BP 54	M		O					
209-51040	240 - 4	1	BU251	M		F					
209-51040- 3		1	BU251	M		F					
209-51040- 5		1	BU251	M		F					
209-51040- 7		1	BU251	M		F					
209-51040- 11	240 - 4	1	BU251	M		F					
209-51040- 21	240	1	BU251	M		F					
209-51042		1	BU243	M		F					
209-51042- 3		1	BU243	M		F					
209-51042- 5		1	BU243	M		F					
209-51042- 7		1	BU243	M		F					
209-51044	315 - 28	1	CV 78	P1	F	O	C		R	1560-031-5112	ANAA
209-51044- 3	315 - 29	1	CV 78	P1	F	O	C		R	1560-508-6839	ANAA
209-51045- 1		1	BD301	M		O					
209-51045- 2		1	BD301	M		O					
209-51047		2	BD302	M		O					
209-51048		2	BD303	M		O					
209-51051- 3	247 - 70	1	BE290	M		O					
209-51051- 5	247 - 73	1	BE290	M		O					
209-51051- 7	247 - 68	1	BE290	M		O					
209-51051- 9	247 - 71	1	BE290	M		O					
209-51051- 11	247 - 51	1	BE290	M		O					
209-51051- 13	247 - 52	1	BE290	M		O					
209-51051- 15	247 - 30	2	BE290	M		F					
209-51051- 17	247 - 31	2	BE290	M		F					
209-51051- 19	247 - 28	2	BE290	M		F					
209-51051- 21		2	BE290	M		F					
209-51051- 23	247 - 24	2	BE290	M		F					
209-51051- 25	247 - 25	2	BE290	M		F					
209-51051- 27	247 - 26	2	BE290	M		F					
209-51051- 29	247 - 27	2	BE290	M		F					
209-51051- 31	247 - 22	2	BE290	M		F					
209-51051- 33	247 - 23	2	BE290	M		F					
209-51051- 35	247 - 20	2	BE290	M		F					
209-51051- 37	247 - 21	2	BE290	M		F					
209-51051- 39	247 - 49	1	BE290	M		F					
209-51051- 41	247 - 50	1	BE290	M		F					
209-51051- 43		1	BE290								
209-51051- 45		1	BE290								
209-51051- 47	247 - 66	1	BE290	M		O					
209-51051- 49	247 - 67	1	BE290	M		O					
209-51051- 51	247 - 77	1	BE290	M		O					
209-51051- 53	247 - 80	1	BE290	M		O					
209-51051- 55	247 - 76	1	BE290	M		O					
209-51051- 57	247 - 74	1	BE290	M		O					
209-51051- 59		1	BE290								
209-51051- 61		1	BE290								
209-51051- 63		1	BE290								
209-51051- 65		1	BE290								
209-51051- 67		1	BE290								
209-51051- 69	247 - 87	1	BE290	M		F					
209-51051- 71	247 - 88	1	BE290	M		F					
209-51051- 73		1	BE290								
209-51051- 75		1	BE290								
209-51051- 77	247 - 85	1	BE290	M		F					
209-51051- 79	247 - 86	1	BE290	M		F					
209-51051- 81		1	BE290								
209-51051- 83	247 - 82	1	BE290	M		F					
209-51051- 85	247 - 79	1	BE290	M		F					
209-51051- 87		1	BE290								
209-51051- 89		1	BE290								
209-51051- 91		1	BE290								
209-51051- 97	247 - 55	1	BE290	M		O					
209-51051- 99	247 - 58	1	BE290	M		O					
209-51051-103	247	1	BE290	M		O					
209-51051-105	247	1	BE290	M		O					
209-51051-107	247	1	BE290	M		O					
209-51051-109	247	1	BE290	M		O					
209-51051-111	247	1	BE290	M		O					
209-51051-113	247	1	BE290	M		O					
209-51051-115	247	2	BE290	M		F					

PART NUMBER	FIGURE AND INDEX	TOTAL QTY.	MICRO-FILM NUMBER	MAINTENANCE CODE DATA: SOURCE CODE	INSTL CAPABILITY	PRE-INSTL CAPABILITY	RECOVERABILITY	SUPPORT EQUIPMENT	FEDERAL STOCK NUMBER DATA: COGNIZANCE CODE	FEDERAL STOCK NUMBER	MFG. CODE (TSMC)
209-51051-117	247	2	BE290	M		F					
209-51051-123	247	2	BE290	M		F					
209-51051-125	247	2	BE290	M		F					
209-51051-127	247	2	BE290	M		F					
209-51051-129	247	2	BE290	M		F					
209-51051-131	247	2	BE290	M		F					
209-51051-133	247	2	BE290	M		F					
209-51051-135	247	2	BE290	M		F					
209-51051-137	247	2	BE290	M		F					
209-51051-139	247	1	BE290	M		F					
209-51051-141	247	1	BE290	M		F					
209-51051-143	247 - 62	1	BE290	M		O					
209-51051-145	247 - 65	1	BE290	M		O					
209-51051-147	247	1	BE290	M		O					
209-51051-149	247	1	BE290	M		O					
209-51051-151	247	1	BE290	M		O					
209-51051-153	247	1	BE290	M		O					
209-51051-155	247	1	BE290	M		O					
209-51051-157	247	1	BE290	M		O					
209-51051-169	247	1	BE290	M		F					
209-51051-171	247	1	BE290	M		F					
209-51051-173		1	BE290								
209-51051-177	247	1	BE290	M		F					
209-51051-179	247	1	BE290	M		F					
209-51051-183	247	1	BE290	M		F					
209-51051-185	247	1	BE290	M		F					
209-51051-193	247	2	BE290	M		F					
209-51051-195	247	2	BE290	M		F					
209-51051-197	247 - 56	1	BE290	M		O					
209-51051-199	247 - 59	1	BE290	M		O					
209-51051-243	247 - 61	1	BE290	M		O					
209-51051-245	247 - 64	1	BE290	M		O					
209-51051-293	247	2	BE290	M		O					
209-51051-295	247	2	BE290	M		O					
209-51051-297	247 - 57	1	BE290	M		O					
209-51051-343	247 - 63	1	BE290	M		O					
209-51052		4	BG301	M		O					
209-51053		1	BL123	M		O					
209-51054- 3	247 - 89	1	CN 60	M		F					
209-51054- 5	249 - 11	1	CN 60	M		F					
	288 - 9										
209-51054- 7	249 - 10	1	CN 60	M		F					
209-51054- 9	249 - 9	1	CN 60	M		F					
209-51054- 13	249 - 8	1	CN 60								
209-51054- 15	247	1	CN 60	M		F					
209-51054- 17	249	1	CN 60	M		F					
	288										
209-51054- 19	249	1	CN 60	M		F					
209-51054- 21	249	1	CN 60	M		F					
209-51054- 23	249	1	CN 60	M		F					
209-51054- 25	247 - 90	1	CN 60	M		F					
209-51054- 27	250 - 15	1	CN 60	M		F					
209-51054- 29	250 - 14	1	CN 60	M		F					
209-51054- 31	250 - 13	1	CN 60	M		F					
209-51054- 33	250 - 12	1	CN 60	M		F					
209-51054- 35	247	1	CN 60	M		F					
209-51054- 37	250 - 17	1	CN 60	M		F					
209-51054- 39	250 - 16	1	CN 60	M		F					
209-51054- 41	250 - 19	1	CN 60	M		F					
209-51054- 43	250 - 18	1	CN 60	M		F					
209-51055	247 - 45	2	BG 5	M		O					
209-51056	247 - 46	2	BD304	P	F	O	S		R	1500-000-7288	ANAA
209-51057- 1		1	BD305	M		O					
209-51057- 2		1	BD305	M		O					
209-51058		2	BD306	M		O					
209-51059		1	DN220	M		O					
209-51059- 3		1	DN220	M		O					
209-51059- 11	219 - 52	1	DN270	M		O					
209-51060		1	BL124								
209-51060- 11	219	1	BL124	M		O					
209-51061		1	BG302	M		O					
209-51064	219	2	CA 55	M		O					
	357										
209-51065	219 - 43	2	BG303	M		O					
209-51066	219	4	BD307	M		O					
209-51068- 3		1	BW 19	X1							
209-51068- 5		1	BW 19	X1							
209-51068- 7		1	BW 19	M		O					
209-51068- 11	219 - 31	1	BW 19	X1							
209-51068- 21	219	1	BW 19	X1							
209-51077	357	2	BD308	M		O					
209-51078	357	9	BD309	M		O					
209-51079- 3	357	2	BL 13	P1	F	O	C		R	1560-570-2282	ANAA
209-51079- 5	357	6	BL 13	P1	F	O	C		R	1560-601-0382	ANAA
209-51080		1	BL125	M		O					
209-51080- 3		1	BL125	M		O					
209-51081		2	BY 80	M		O					
209-51082		1	BG305	M		O					
209-51083		1	BN 43	M		O					
209-51083- 3		1	BN 43	M		O					
209-51083- 5		1	BN 43	M		O					
209-51084- 3		1	BG306	P1	F	O	C		R	1560-569-6435	ANAA
209-51084- 5	219 - 26	1	BG306	M		O			R	1560-569-6459	ANAA
209-51085	219 - 30	2	BL126	M		O					
209-51088- 3		1	BG307	M		F					
209-51089	219	1	BT 91	M		O					
	357										
209-51089- 3	219 - 32	1	BT 91	M		O					
209-51089- 5	219 - 39	1	BT 91	M		O					
209-51089- 7	219 - 38	1	BT 91	M		O					
209-51089- 21	219 - 37	1	BT 91	M		O					
209-51089- 23	219 - 34	1	BT 91	M		O					
209-51089- 25	219 - 36	1	BT 91	M		O					
209-51089- 27	219 - 33	1	BT 91	M		O					
209-51092	219 - 22	1	BL128	P1	F	O	S		R	1560-694-8017	ANAA

PART NUMBER	FIGURE AND INDEX	TOTAL QTY.	MICRO-FILM NUMBER	MAINTENANCE CODE DATA: SOURCE CODE	INSTL CAPABILITY	PRE-INSTL CAPABILITY	RECOVERABILITY	SUPPORT EQUIPMENT	FEDERAL STOCK NUMBER DATA: COGNIZANCE CODE	FEDERAL STOCK NUMBER	MFG. CODE (TSMC)
209-51093	219 -137	1									
		2	BG308	P1	F	O	C		R	5325-550-1922	ANAA
209-51094		2	BG309	M		O					
209-51094- 3		2	BG309	M		O					
209-51094- 5		2	BG309	M		O					
209-51095	219 - 23	1	BV199	P1	F	O	S		R	1560-694-8018	ANAA
209-51095	255 - 12	1	BG310	M		O					
209-51096- 3		1	BG310	M		O					
209-51097- 3		1	BD210	M		O					
209-51097- 5		1	BD210	M		O					
209-51097- 7		1	BD210	M		O					
209-51098	135	1	BV288	A		F					
	255 - 4										
209-51098- 10		1	BV288								
209-51098- 20	124	1	BV288	A		F					
	255 - 31										
209-51098- 30	126	1	BV288	A		F					
	127										
	255 - 38										
209-51098- 40	134 -104	1	BV288	M		O					
	135 - 75										
	255 - 18										
209-51099- 1		1	BW 28	M		O					
209-51099- 2		1	BW 28	M		O					
209-51099- 5		1	BW 28	M		O					
209-51099- 6		1	BW 28	M		O					
209-51099- 7		2	BW 28	M		O					
209-51099- 9		1	BW 28	M		O					
209-51099- 10		1	BW 28	M		O					
209-51100	264 - 93	1									
209-51100- 10		1	CA 15								
209-51101	264	1	BN 73	A		F					
209-51101- 10		1	BN 73	A		F					
209-51102	264 - 60	1									
209-51102- 10		1	BN 82	A		F					
209-51103	264 - 55	1									
209-51104	264 - 27	1									
209-51106	264	1	BG311	M		O					
209-51107	264 - 46	1									
209-51108	264 - 33	2									
209-51110		1									
209-51111		1	BY 49	U							
209-51112- 3	315 - 69	1	BN133	M		O					
209-51112- 5	315 - 70	1	BN133	M		O					
209-51113	315 - 68	1	BN116								
209-51114	274	1	BL130	A		O					
209-51115		1	BJ107	U							
209-51116		1	BL131	M		O					
209-51118- 3		1	BL131	M		O					
209-51117		1	BD312	M		O					
209-51118	264 - 21	6									
209-51119	264	2	BG312	M		O					
209-51119- 3	264 - 25	1									
209-51120	264 - 36	2									
209-51121	264	1	BL132	M		O					
209-51121- 3	264 - 42	1									
209-51122	264	1	BL133	M		O					
209-51122- 3	264 - 18	1									
209-51125- 9		1									
209-51126	221 - 10	1	BL134	M		O					
	224 - 10										
209-51126- 3		1	BL134	M		O					
209-51127		1	BG 6	M		O					
209-51127- 3		1	BG 6	M		O					
209-51128	247 - 9	1	BG 7	M		O					
209-51129	247	1	BG 8	A		F					
209-51129- 11	247	1	BG 8	A		F					
209-51130		1	BP180	M		O					
209-51131		1	BD315								
209-51132	264 - 65	1									
209-51132- 3		1	BW 41	M		O					
209-51132- 5		1	BW 41	M		O					
209-51132- 7		1	BW 41	M		O					
209-51132- 11		1	BW 41	M		O					
209-51132- 13		1	BW 41	M		O					
209-51132- 15		1	BW 41	M		O					
209-51132- 17		1	BW 41	M		O					
209-51133	315 - 10	1	CV 63	P1	F	O	C		R	1560-694-8019	ANAA
209-51133- 5	315 - 11	1	CV 63	P1	F	O	C		R	1560-348-7561	ANAA
209-51134	315 - 14	1	CV 3	P1	F	O	C		R	1560-694-8020	ANAA
209-51136		1	BN 42	M		O					
209-51136- 3		1	BN 42	M		O					
209-51137		1	CX169	M		O					
209-51137- 3		1	CX169	M		O					
209-51137- 5		1	CX169	M		O					
209-51137- 7		1	CX169	M		O					
209-51137- 11		1	CX169	M		O					
209-51138	270 - 28	1	DD155								
209-51139	270 - 7	1	BQ215	M		O					
	270 - 33										
209-51140		1	DS104								
209-51140- 3	293 - 18	1	DS104	P1	F	O	C		R	1560-697-8431	ANAA
209-51140- 5	270 - 67	1	DS104	P1	F	O	C		R	1560-697-8432	ANAA
	271 - 6										
209-51141	240 - 3	1	BL135	M		F					
209-51141- 3		1	BL135	M		F					
209-51142	270 - 70	2	DN169	M		O					
	293 - 12										
209-51143	276 - 16	1	BL136	M		O					
209-51143- 3		1	BL136	M		O					
209-51143- 5		1	BL136	M		O					
209-51144		1	DP140	M		O					
209-51144- 3		1	DP140	M		O					
209-51144- 11	315 - 60	1	DP140	M		O					
209-51145	276	1	BL137	M		O					

PART NUMBER	FIGURE AND INDEX	TOTAL QTY.	MICRO-FILM NUMBER	MAINTENANCE CODE DATA: SOURCE CODE	INSTL CAPABILITY	PRE-INSTL CAPABILITY	RECOVERABILITY	SUPPORT EQUIPMENT	FEDERAL STOCK NUMBER DATA: COGNIZANCE CODE	FEDERAL STOCK NUMBER	MFG. CODE (TSMC)
209-51146		1	CB 7	M		0					
209-51149	270 - 20	1	BL138	M		0					
209-51150	293 - 19	2	DS 97	M		0					
209-51150- 3		2	DS 97	M		0					
209-51150- 5		2	DS 97	M		0					
209-51150- 7		1	DS 97	M		0					
209-51150- 9		1	DS 97	M		0					
209-51150- 11	270 - 68	1	DS 97	M		0					
	271 - 7										
209-51151- 11	207 - 19	1	DN170	A		F					
	233 - 10										
	270 - 65										
209-51151- 21	207 - 20	1	DN170	A		F					
	233 - 11										
	293 - 16										
209-51151- 31	208 - 21	1	DN170	A		F					
	233										
	271 - 5										
209-51151-331		1	BX114								
209-51152		1	CV 2	M		0					
209-51153- 10	264 - 73	1									
		1	CE 29	U							
209-51154- 10	264 - 72	1									
		1	CA 4	M		0					
209-51155	39 - 56	1	BD318	M		0					
209-51159	219 - 10	1									
209-51159- 3		1	BT122	X1							
209-51160	219	1	BX186	P1	F	0	S		R	1560-697-8433	ANAA
	357										
209-51160- 21	219	1	BX186						R	1560-603-3539	ANAA
	357										
209-51160- 31	219	1	BX186	P1	F	0	S		R	1560-613-4901	ANAA
209-51161	270 - 11	1	BL139	M		0					
209-51161- 3		1	BL139	M		0					
209-51161- 5		1	BL139	M		0					
209-51162	219	1	BT104	A		F			R	1560-697-8434	ANAA
	357										
209-51163	247 - 13	1	BF443	M		0					
209-51163- 3		1	BF443	M		0					
209-51164		1	BG 9	M		0					
209-51164- 3		1	BG 9	M		0					
209-51165	255 - 28	1	BV186	M		0					
209-51166	255 - 15	1	BV158	M		0					
209-51166- 3		1	BV158	M		0					
209-51166- 5		1	BV158	M		0					
209-51166- 7		1	BV158	M		0					
209-51166- 9		1	BV158	M		0					
209-51166- 11		1	BV158	M		0					
209-51167	247	1	BV158	M		0					
209-51168		1	BU140	M		0					
209-51171		1		M		0					
209-51171- 3		1		M		0					
209-51171- 7		1		M		0					
209-51171- 11		1		M		0					
209-51171- 13		1		M		0					
209-51171- 21		1		M		0					
209-51172		1		M		0					
209-51172- 3		1		M		0					
209-51174		1	BP143	M		F					
209-51175		1		M		0					
209-51177		2		X1							
209-51178	219 - 10	1	BS132	P1	F	0	C		R	1560-569-6465	ANAA
209-51178- 3		1	BS132	X1							
209-51179		1		M		0					
209-51180	317 - 4	1	CV 18	M		0					
	318 - 69										
209-51185		1	CA 56	M		0					
209-51187- 3	357	1		M		0					
209-51187- 5	357	1		M		0					
209-51188		1	CB 9	M		0					
209-51189	293 - 8	1		M		0					
	294 - 3										
209-51189- 3		1		M		0					
209-51189- 5		2		M		0					
209-51195- 1		1		M		0					
209-51195- 2		1		M		0					
209-51195- 5		1		M		0					
209-51195- 6		1		M		0					
209-51195- 7		2		M		0					
209-51195- 9		1		M		0					
209-51195- 10		1		M		0					
209-51196	315 - 74	1		M		0					
209-51197	208 - 18	1	DK 84	A		F					
	233 - 14										
	271 - 45										
209-51211		1	DN224	U							
209-51411		1	CN 74	U							
209-51600- 1	247 - 33	1	DJ226	P1	F	0	S		R	1560-031-5116	ANAA
	358										
209-51600- 2	247 - 35	1	DJ226	P1	F	0	S		R	1560-031-5117	ANAA
	358										
209-51601- 1		2	BD320	M		0					
209-51601- 2		2	BD320	M		0					
209-51602- 3		2	BL141	M		0					
209-51602- 5		2	BL141	M		0					
209-51603		2	BD321	M		0					
209-51604- 1		2	BD322	M		0					
209-51604- 2		2	BD322	M		0					
209-51605- 3		4	BG316	P1	F	0	C		R	1560-569-6471	ANAA
209-51605- 5		4	BG316								
209-51606- 1		1	BD323	M		0					
209-51606- 2		1	BD323	M		0					
209-51607		1	CB105	M		0					
209-51607- 3		1	CB105	M		0					
209-51608		1	BX217	M		0					

PART NUMBER	FIGURE AND INDEX	TOTAL QTY.	MICRO-FILM NUMBER	MAINTENANCE CODE DATA: SOURCE CODE	INSTL CAPABILITY	PRE-INSTL CAPABILITY	RECOVERABILITY	SUPPORT EQUIPMENT	FEDERAL STOCK NUMBER DATA: COGNIZANCE CODE	FEDERAL STOCK NUMBER	MFG. CODE (TSMC)
209-51608- 3		1	BX217	M		0					
209-51611	358	1	BE291	U							
209-51801- 13	219 - 64	1	DS109	M		F					
209-51801- 14		1	DS109	M		F					
209-51801- 15	219 - 63	1	DS109	M		F					
209-51801- 16		1	DS109	M		F					
209-51801- 17	219 - 67	1	DS109	M		F					
209-51801- 18		1	DS109	M		F					
209-51801- 19	219 - 66	1	DS109								
209-51801- 20		1	DS109	M		F					
209-51801- 21	219 - 98	1	DS109	M		F					
209-51801- 22		1	DS109	M		F					
209-51801- 23	219 - 97	1	DS109	M		F					
209-51801- 24		1	DS109	M		F					
209-51801- 29	219 - 90	1	DS109	M		F					
209-51801- 30		1	DS109	M		F					
209-51801- 31	219 - 89	1	DS109								
209-51801- 32		1	DS109	M		F					
209-51801- 33	219 -114	1	DS109	M		F					
209-51801- 34		1	DS109	M		F					
209-51801- 45	219 - 58	1	DS109	M		F					
209-51801- 46		1	DS109	M		F					
209-51801- 47	219 - 57	1	DS109								
209-51801- 48		1	DS109	M		F					
209-51801- 49	219 - 61	1	DS109	M		F					
209-51801- 50		1	DS109	M		F					
209-51801- 51	219 - 60	1	DS109								
209-51801- 52		1	DS109	M		F					
209-51801- 57	219 - 70	1	DS109								
209-51801- 58		1	DS109	M		F					
209-51801- 59	219 - 69	1	DS109	M		F					
209-51801- 60		1	DS109	M		F					
209-51801- 61	219 - 45	1	DS109	M		F					
	357										
209-51801- 62		1	DS109	M		F					
209-51801- 63	219 - 46	1	DS109	M		F					
	357										
209-51801- 64		1	DS109	M		F					
209-51801- 65	219 - 41	1	DS109								
	357										
209-51801- 66		1	DS109	M		F					
209-51801- 67	219 - 42	1	DS109	M		F					
	357										
209-51801- 68		1	DS109	M		F					
209-51801- 69	219 -115	1	DS109	M		F					
209-51801- 70		1	DS109	M		F					
209-51801- 71	219 -116	1	DS109								
209-51801- 72		1	DS109	M		F					
209-51801- 73	219 -117	1	DS109								
209-51801- 74		1	DS109	M		F					
209-51801- 75	219 -119	1	DS109	M		F					
209-51801- 76		1	DS109	M		F					
209-51801- 77	219 -120	1	DS109								
209-51801- 78		1	DS109	M		F					
209-51801- 79	219 - 92	1	DS109								
209-51801- 80		1	DS109	M		F					
209-51801- 81	219 - 91	1	DS109	M		F					
209-51801- 82		1	DS109	M		F					
209-51801- 83	219 - 95	1	DS109								
209-51801- 84		1	DS109	M		F					
209-51801- 85	219 - 94	1	DS109								
209-51801- 86		1	DS109	M		F					
209-51801- 87	219 -110	1	DS109	M		F					
209-51801- 88		1	DS109	M		F					
209-51801- 89	219 -111	1	DS109	M		F					
209-51801- 90		1	DS109	M		F					
209-51801- 91	219 -112	1	DS109	M		F					
209-51801- 92		1	DS109	M		F					
209-51801- 93	219 -113	1	DS109	M		F					
209-51801- 94		1	DS109	M		F					
209-51801- 95	219	1	DS109	M		F					
209-51801- 96		1	DS109	M		0					
209-51801- 97	219	1	DS109	M		F					
209-51801- 98		1	DS109	M		0					
209-51802- 1	219 - 73	1	DK 85	M		F					
209-51802- 2		1	DK 85	M		F					
209-51802- 3	219 - 83	1	DK 85	M		F					
209-51802- 4		1	DK 85	M		F					
209-51802- 5	219 - 86	1	DK 85	M		F					
209-51802- 6		1	DK 85	M		F					
209-51802- 7	219 - 72	1	DK 85								
209-51802- 8		1	DK 85	M		F					
209-51802- 9	219 - 82	1	DK 85	M		F					
209-51802- 10		1	DK 85	M		F					
209-51802- 11	219 - 85	1	DK 85	M		F					
209-51802- 12		1	DK 85	M		F					
209-51802- 21	219 - 13	1	DK 85	M		F					
209-51802- 22		1	DK 85	M		F					
209-51802- 23	219 - 12	1	DK 85								
209-51802- 24		1	DK 85	M		F					
209-51802- 25	219 - 88	1	DK 85	M		F					
209-51802- 26		1	DK 85	M		F					
209-51802- 27	219 - 87	1	DK 85	M		F					
209-51802- 28		1	DK 85	M		F					
209-51802- 29	219 -105	1	DK 85	M		F					
209-51802- 30		1	DK 85	M		F					
209-51802- 31	219 -107	1	DK 85	M		F					
209-51802- 32		1	DK 85	M		F					
209-51802- 33	219 -103	1	DK 85	M		F					
209-51802- 34		1	DK 85	M		F					
209-51802- 35	219 -100	1	DK 85	M		F					
209-51802- 36		1	DK 85	M		F					
209-51802- 37	219 -109	1	DK 85	M		F					
209-51802- 38		1	DK 85	M		F					
209-51802- 39	219 - 76	1	DK 85								

Part Number	Figure and Index	Total Qty.	Micro-film Number	Maintenance Code Data: Source Code	Instl. Capability	Pre-Instl. Capability	Recoverability	Support Equipment	Cognizance Code	Federal Stock Number Data: Federal Stock Number	Mfg. Code (TSMC)
209-51802- 40		1	DK 85	M		F					
209-51802- 41	219 - 75	1	DK 85	M		F					
209-51802- 42		1	DK 85	M		F					
209-51802- 43	219 - 21	1	DK 85	M		F					
	357										
209-51802- 44		1	DK 85	M		F					
209-51802- 45	219 - 20	1	DK 85	M		F					
	357										
209-51802- 46		1	DK 85	M		F					
209-51803- 3	93 - 53	1	DH285	M		F					
	94 - 51										
	223 - 4										
209-51803- 4		1	DH285	M		F					
209-51603- 5	223 - 9	1	DH285	M		F					
209-51803- 6		1	DH285	M		F					
209-51803- 9	223 - 5	1	DH285	M		F					
209-51803- 10		1	DH285	M		F					
209-51803- 11	223 - 10	1	DH285	M		F					
209-51803- 12		1	DH285	M		F					
209-51803- 15	223	1	DH285								
209-51810		1	DH286	M		O					
209-51811	223 - 14	1		M		O					
209-51811- 3		1		M		O					
209-51811- 5		1		M		O					
209-51811- 7		1		M		O					
209-52001		1	BG 31	U							
209-520012		1	DP 23								
209-520101	195 - 72	2	BD325	M		O					
209-520102	195 - 80	2	BD326	M		O					
209-520103	195 - 76	2	BG317	M		O					
209-520105	193 - 86	2	CG216	M		O					
209-520106- 1	193 - 83	1	DR 68	M		O					
209-520106- 2		1	BL 16	M		O					
209-520107- 1	193 - 85	1	BG319	P	F	O	S		R	1560-031-5122	ANAA
209-520107- 2	193	1	BG319	P1	F	O	S		R	1560-031-5123	ANAA
209-520109	193 - 94	2	DR 47	M		O					
209-520110- 1	193 - 95	1	CP 45	P1	F	O	S		R	1560-569-6487	ANAA
209-520110- 2	193	1	CP 45	P1	F	O	S		R	1560-569-6493	ANAA
209-520110- 3		1	CP 45	X1							
209-520110- 4		1	CP 45	X1							
209-520112	195 - 74	2	BP328	M		O					
209-520115- 1		1							R	1560-323-4159	ANAA
209-520115- 2		1							R	1560-323-4160	ANAA
209-520118	195	2	BG321	P	F	O	S		R	1560-031-5125	ANAA
209-520118- 11	195	2	BG321	M		O					
209-52012		1	DG282	U							
209-520122	164 -125	2	BL144	P1	F	O	S		R	1560-031-5126	ANAA
	165 - 95										
	193 - 74										
209-520122- 3	193 - 75	2	BL144	P1	F	O	S		R	1560-338-1020	ANAA
209-520123	193 - 77	2	BD330	M		O					
209-520123- 3	193 - 78	2	BD330	M		O					
209-520126	195 - 78	2	BG323	M		O					
209-520127		2	BD331	M		O					
209-520128- 1	195 - 71	1	BX115	M		O					
209-520128- 2	195	1	BX115	M		O					
209-520128- 3		1	BX115	M		O					
209-520128- 4		1	BX115	M		O					
209-520129	193 - 76	2	BL145	P1	F	O	S		R	5315-338-0050	ANAA
209-52013		1	DR322	U							
209-520131	205 -115	1	CA 6								
209-520131- 3		1	CA 6	X1							
209-520131- 11	205 -115	1	CA 6	P1	F	O	S		R	1560-510-1137	ANAA
209-520132	38	1		M		O					
	205 - 80										
209-520133	205	1	BS 85	M		O					
209-520134		1	BP 72	M		O					
209-520134- 3		1	BP 72	M		O					
209-520136	205 - 40	1	BY266	M		O					
209-520136- 3		1	BY266	M		O					
209-520136- 5		1	BY266	M		O					
209-520137	205 - 66	1	DL158	X2							
209-520137- 3	205 - 66	1									
209-520138	205 - 48	1	BY263	P1	F	O	S		R	1560-510-1138	ANAA
209-520138- 3		1	BY263	X1							
209-520138- 7		1	BY263	M		O					
209-520138- 9		1	BY263	M		O					
209-520138- 11		1	BY263	M		O					
209-520139		1	BQ224								
209-52014- 1	357	1	DC 14	U							
209-52014- 2	357	1	DC 14								
209-520140	205	1	BH 32	A		F					
209-520140- 2		1	BH 32								
209-520141	205 - 32	1	BX116	P1	F	O	S		R	1560-570-2283	ANAA
209-520142	205 - 25	1	BL146	M		O					
209-520143	205 - 60	1	CB 56	P1	F	O	S		R	1560-510-1139	ANAA
209-520144	205 - 62	1	CB 57	P1	F	O	S		R	1560-570-2284	ANAA
209-520145	205 - 44	1	BH220	M		O					
209-520146	205	1	BH246	P	F	O	S		R	1560-510-1140	ANAA
209-520146- 11	205	1	BH246	X1							
209-520147	205 - 61	1		P	F	O	C		R	1560-526-1517	ANAA
209-520148	125 -129	1									
	205 - 3	1	DN 67	P	F	O	C		R	1560-513-4913	ANAA
209-520149	205 - 2	1	BB 22	P	F	O	C		R	1560-515-3294	ANAA
209-52015		2	BH 17	M		O					
209-520151	206 - 10	1	DG162	P1					R	1560-514-0182	ANAA
209-520152	206 - 15	1	BX261	P1					R	1560-663-3817	ANAA
209-520167	206 - 3	1		M		O					
209-520168	206 - 9	1	BX262	P1	F	O	S		R	1560-514-0183	ANAA
209-520169	206 - 11	1	BX263	M		O					
209-520173- 3		1	BP 45	M		O					
209-520173- 11	205 - 95	1	BP 45	M		O					
209-520174	205 - 67	1	DL162								
209-520174- 3		1	DL162	X1							
209-520174- 7		1	DL162	X1							
209-520174- 11	205 - 67	1	DL162	P2	F	O	S		R	1560-569-6970	ANAA
209-520174- 21	205	1		P2		O	S		R	1560-603-3565	ANAA
209-520175	205 - 45	1		M		O					
209-520179		1	BY244	X1							
209-520179- 3		1	BY244								
209-520182	206 - 8	1	CA167	P1	F	O	S		R	1560-522-4611	ANAA
209-520183	206 - 13	1	CA168	P1	F	O	S		R	1560-522-4612	ANAA
209-520184	206 - 4	1	BX238								
209-520184- 3		1	BX238								
209-520185	206 - 17	1	BY 64	P1							
209-520186	205 -100	1	DR127						R	1560-522-4613	ANAA
	206										
209-520186- 11	205 -100	1	DR127						R	1560-571-5496	ANAA
	206										
209-520192		1		M		O					
209-520193	193 - 92	1							R	1560-552-0151	ANAA
209-520195- 1	193 - 93	1		P1	F	O	S		R	1560-511-2301	ANAA
209-520195- 2	193	1		P1	F	O	S		R	1560-587-0818	ANAA
209-520196- 1	193	1	CP 58	A		F					
209-520196- 2	193	1	CP 58	A		F					
209-52020	195 - 75	2	BD334	M		O					
209-52021	195 - 81	2	BH 18	M		O					
209-52022	195 - 75	2	DR 48	M		O					
209-52023	195 - 79	1	BH 19	M		O					
209-52023- 3	195 -100	1	BH 19	M		O					
209-52024		2	BX125	M		O					
209-52025		2	BY268	P	F	O	S		R	1560-694-8021	ANAA
209-52025- 11		1	BY268	M		O					
209-52025- 21	195	2	BY268	P	F	O	S		R	1560-534-4115	ANAA
209-52025- 31	195	2	BY268	M		O					
209-52026	174 - 29	4	BD336	M		O					
209-52027	194 - 3	1	BL151	X2							
209-52028	194	1	BH 32	M		O					
209-52029- 3	193 - 81	1	BH 23	M		O					
209-52029- 5	193 - 55	1	BH 23	M		O					
209-52030- 11		1	DD 96	M		F					
209-52030- 14		1	DD 96								
209-52030- 17		1	DD 96	M		F					
209-52030- 19		1	DD 96	M		F					
209-52030- 21		1	DD 96	M		F					
209-52030- 22		1	DD 96	M		F					
209-52030- 25		1	DD 96	M		F					
209-52030- 27		1	DD 96	M		F					
209-52030- 29		1	DD 96	M		F					
209-52030- 31		1	DD 96	M		F					
209-52030- 33		1	DD 96	M		F					
209-52030- 35		1	DD 96	M		F					
209-52030- 37		1	DD 96	M		F					
209-52030- 39		1	DD 96	M		F					
209-52030- 41		1	DD 96	M		F					
209-52030- 43		1	DD 96	M		F					
209-52030- 44		1	DD 96	M		F					
209-52030- 45		1	DD 96	M		F					
209-52030- 46		1	DD 96	M		F					
209-52030- 47		1	DD 96	M		F					
209-52030- 49		1	DD 96	M		F					
209-52030- 51		1	DD 96	M		F					
209-52030- 53		1	DD 96	M		F					
209-52030- 55		1	DD 96	M		F					
209-52030- 59		1	DD 96	M		F					
209-52030- 99		1	DD 96	M		F					
209-52030-107		1	DD 96	M		F					
209-52030-108		1	DD 96	M		F					
209-52030-109		1	DD 96	M		F					
209-52030-111	193 - 48	1	DD 96	M		F					
209-52030-117	193 - 79	1	DD 96	M		F					
209-52030-119	193	1	DD 96	M		F					
209-52030-121	193 - 90	1									
209-52030-122	193 - 90	1									
209-52030-125	193 - 52	1	DD 96	M		F					
209-52030-127	193 - 51	1	DD 96	M		F					
209-52030-129	193 - 56	1	DD 96	M		F					
209-52030-130	193 - 53	1									
209-52030-131		1	DD 96	M		F					
209-52030-133	193 - 59	1	DD 96	M		F					
209-52030-135	193	1	DD 96	M		F					
209-52030-137	193	1	DD 96	M		F					
209-52030-139	193 - 54	1	DD 96								
209-52030-141		1	DD 96								
209-52030-143	193	1	DD 96	M		F					
209-52030-144	193	1	DD 96	M		F					
209-52030-145	193 - 74	1	DD 96	M		F					
209-52030-146	193	1	DD 96	M		F					
209-52030-147	193 - 48	1	DD 96	M		F					
209-52030-149	193 - 61	1	DD 96	M		F					
209-52030-151	193	1	DD 96	M		F					
209-52030-153	193 - 80	1	DD 96	M		F					
209-52030-155	193	1	DD 96	M		F					
209-52030-157	193 - 96	1	DD 96	M		F					
209-52030-159		1	DD 96	M		F					
209-52030-203		1	DD 96	M		F					
209-52030-205		1	DD 96	M		F					
209-52030-209	193 - 57	1	DD 96	M		F					
209-52030-245	193 - 80	1	DD 96	M		F					
209-52030-246	193	1	DD 96	M		F					
209-52031		1	BU154	U							
209-52032	358 - 2	1	DJ 90	U							
209-52032-159	193 - 54	1	DJ 90								
209-52039- 1	193 - 61	1	BW 18	P1	F	O	S				
209-52039- 2	193	1	BW 18	P1	F	O	S				
209-52039- 3		1	BW 18	X1							
209-52039- 4		1	BW 18	X1							
209-52035	195	2	BX135	M		O					
209-52036		1	DJ 48								
209-52037		1	BH 24								

PART NUMBER	FIGURE AND INDEX	TOTAL QTY.	MICRO-FILM NUMBER	MAINTENANCE CODE DATA: SOURCE CODE	INSTL CAPABILITY	PRE-INSTL CAPABILITY	RECOVERABILITY	SUPPORT EQUIPMENT	COGNIZANCE CODE	FEDERAL STOCK NUMBER DATA: FEDERAL STOCK NUMBER	MFG. CODE (TSMC)
209-52040	172 - 72	1									
	172 - 85	2									
209-52040- 3	172 - 73	1									
209-52040- 5	175 - 50	2	DR 90								
209-52040- 7	175 - 77	2	DR 90	M		O					
209-52042		1	DN221	M		O					
209-52042- 3		1	DN221	M		O					
209-52042- 5		1	DN221	M		O					
209-52043	193 - 36	1	BL155	M		O					
209-52044	193	1	BL154	A		F					
209-52045	195 -115	10	CN 89	M		O					
	196 - 87										
	196 -100										
	197 - 27										
	198 - 22										
	200 - 15										
209-52045- 3	200 - 41	1	CN 89	M		O					
209-52046	195 -119	4	BH 26	M		O					
	196 -103										
	197 - 28										
	198 - 23										
	203 - 62										
209-52047	184 -137	1									
209-52047- 3	181 - 37	1	BH 27	M		O					
	184										
	185 - 97										
209-52048	184 -138	1									
209-52048- 3	181 - 38	1	BH 28	M		O					
	184										
	185 - 98										
209-52049	180 - 75	14	CN 88	M		O					
	195 -116										
	195 -120										
	196 - 88										
	196 - 99										
	196 -104										
	197 - 26										
	198 - 21										
	200 - 16										
	200 - 40	1									
	205 - 61										
209-52051	188	1	BW 14	P1	F	O	S		R	1560-338-1021	ANAA
	189 - 9										
	358										
209-52056		1									
209-52057- 3	193 - 68	1	BW 9	X1							
209-52057- 4	193	1	BW 9	X1							
209-52057- 11	193 - 67	1	BW 9	P1	F	O	S		R	1560-532-0152	ANAA
209-52057- 12	193	1	BW 9	P1	F	O	S		R	1560-544-8553	ANAA
209-52058		1	BL155								
209-52060	174 - 13	2	BD337	M		O					
	174 - 21										
209-52064-101		1	DN 93	U							
209-52065- 1	193 - 65	1	BV165	P1	F	O	S		R	1560-569-7035	ANAA
209-52065- 2	193	1	BV165	P1	F	O	S		R	1560-569-7128	ANAA
209-52065- 3	193 - 66	1	BV165	X1							
209-52065- 4	193	1	BV165	X1							
209-52073	200 -104	1	BN 14	M		O					
209-52074	200 -105	1	OJ252	M		O					
209-52075		1	DH242	M		F					
209-52076	200 -111	1	BM 31	M		O					
209-52077	188 - 49	1	BV289	P1	F	O	S		R	1560-031-5127	ANAA
	358										
209-52078		1	BD339	M		F					
209-52079		2	DN162	M		F					
209-52080- 1	203 - 78	1	BV307	M		O					
209-52080- 2	203	1									
209-52080- 3		1	BV307	M		O					
209-52080- 4		1	BV307	M		O					
209-52080- 9		1	BV307	M		O					
209-52080- 10		1	BV307	M		O					
209-52080- 11		1	BV307	M		O					
209-52080- 12		1	BV307	M		O					
209-52080- 14		1	BV307	M		O					
209-52080- 15		1	BV307	M		O					
209-52080- 16		1	BV307	M		O					
209-52080- 17		1	BV307	M		O					
209-52080- 18		1	BV307	M		O					
209-52080- 19		1	BV307	M		O					
209-52080- 20		1	BV307	M		O					
209-52080- 21		1	BV307	M		O					
209-52080- 22		1	BV307	M		O					
209-52080- 25		1	BV307	M		O					
209-52080- 26		1	BV307	M		O					
209-52084- 1	195	1	BX117	M		O					
209-52084- 2	195	1	BX117	M		O					
209-52084- 3		1	BX117	M		O					
209-52084- 4		1	BX117	M		O					
209-52085	195 - 77	2	BX118	M		O					
209-52086		2	BD 32	M		O					
209-52099		1	DH243								
209-52110	179 - 6	1	DN222								
209-521186	189 - 42	1									
209-52129		1									
209-522105		1	OJ 18	M		O					
209-522108		1		M		O					
209-52213	177	1	DN272	X1							
209-52213- 3	177 - 16	1	DN272	X1							
209-52214	177 - 15	1	OJ 22	M		O					
209-52215	177 - 9	1	OJ 23	M		O					
209-52215- 3	177 - 10	1		M		O					
209-52216		1									
209-52217	177 - 13	1	OJ 24	M		O					
209-52217- 3	177 - 14	1	OJ 24	M		O					
209-52218	89 - 1	1	OJ 9						R	1560-512-8103	ANAA

PART NUMBER	FIGURE AND INDEX	TOTAL QTY.	MICRO-FILM NUMBER	MAINTENANCE CODE DATA: SOURCE CODE	INSTL CAPABILITY	PRE-INSTL CAPABILITY	RECOVERABILITY	SUPPORT EQUIPMENT	COGNIZANCE CODE	FEDERAL STOCK NUMBER DATA: FEDERAL STOCK NUMBER	MFG. CODE (TSMC)
209-52218- 31	177	1	OJ 9	P1	F	O	S		R	1560-510-4928	ANAA
	182 - 81										
	358										
209-52218- 41	177	1	OJ 9	P1	F	O	S		R	1560-602-4230	ANAA
	183 - 80										
209-52221		1	BH 40								
209-522215	183 - 74	1	DH 14	M		O					
209-522216	183 - 65	1	DH 15	M		O					
209-52226- 3	191 - 71	1									
	192 - 50										
209-522276- 3		1		X1							
209-52230- 11	185 - 7	1									
209-52231	181 - 21	2	DR 49	M		O					
209-52231- 3		2	DR 49	M		F					
209-52232	181 - 20	2	DR 50	M		O					
209-52232- 3		2	BD345	M		F					
209-522346		1	DN128								
209-522346- 11	183 -138	1	DN128						R	1560-571-7130	ANAA
209-522347- 11		1	DP 48						R	1560-571-7131	ANAA
209-522348- 11	183 -156	2	DN125						R	1560-571-7132	ANAA
209-522349		1	DN129								
209-522349- 3		1	DN129	U					R	1560-571-7133	ANAA
209-52235	182 - 33	1	DH 11	M		O					
	183 - 34										
	358										
209-52235- 3	182	1	DH 11	M		O					
	183										
209-52235- 11	182 - 34	1	DH 11	M		O					
	183 - 35										
209-522350- 3	183 -135	1	DN151						R	1560-571-7008	ANAA
209-522350- 5		1	DN151	U					R	1560-571-7009	ANAA
209-522350- 7	183 -111	1	DN151						R	1560-571-7010	ANAA
209-522351		1	DM 57								
209-522352	89 - 68	1	DJ280						R	1560-571-7134	ANAA
209-522353	183 -131	1	DN152						R	1560-571-7011	ANAA
209-522354		1	DN122								
209-522354- 3	183 -119	1	DN122						R	1560-571-7135	ANAA
209-522355- 3	183 -120	1	DN124						R	1560-571-7136	ANAA
209-522356	183 -127	1	DK114								
209-522356- 3		1	DK114								
209-522357	183 -122	1	DK 86								
209-522357- 11		1							R	5340-571-7012	ANAA
209-522358	183	1	DM 27								
209-522359		1	DN153								
209-522359- 3	183 -130	1	DN153								
209-522359- 5		2	DN153	U					R	1560-573-1037	ANAA
209-522359- 7	89 - 67	1	DN153								
209-522359- 9		1	DN153								
209-522359- 11	183 -157	2	DN153						R	1560-571-6996	ANAA
209-522359- 13	183 -198	2	DN153	M		O					
209-522359- 15	89 - 57	2	DN153	M		O					
209-522359- 17	183 -158	1									
209-522359- 19	183 -145	1	DN153	M		O					
209-522359- 21	183 -144	1	DN153	M		O					
209-52236- 3	182 - 49	1	DJ 85	X1							
209-52236- 5	182 - 48	1	DJ 85	X2							
209-52236- 7	183	1	DJ 85	X1							
209-52236- 9	183 - 49	1	DJ 85	X2							
209-522360	183 -194	4	DN154						R	1560-571-6997	ANAA
209-522361	183 -150	1	DN155								
209-522361- 3	183 -150	1	DN155								
209-522362	183 -155	2	DN156						R	1560-571-6999	ANAA
209-522363	183 -118	1	DN157	M		O					
209-522364		1	DQ 28								
209-522364- 3	87	2							R	1560-571-7000	ANAA
209-522364- 5	182	4							R	1560-571-7001	ANAA
	183 -185										
209-522365	183 -196	1	DR 91	P1	F	O	C		R	5306-574-6102	ANAA
	358										
209-52237	122 - 51	1	BV162	P1	O	O	S		R	1560-509-4701	ANAA
	125 - 61	1									
	182 - 8										
	183 - 7										
	183 - 8										
	183 - 19										
	358										
209-52237- 11	183 - 8	1	BV162	P1		O	S		R	1560-575-2175	ANAA
	183 - 19										
209-522373	183 -171	1		P	F	O	C		R	1560-586-7413	ANAA
209-522374	183 -172	1		M		O					
209-522375	183 -170	1									
209-522378- 1	183	1		X2							
209-522378- 2	183 -197	1		X2							
209-522378- 3		1		X1							
209-522378- 4		1		X1							
209-522379	183 -151	2							R	1560-591-3828	ANAA
209-52238	182 -109	1	BL158	X2							
209-522380- 1	183 -142	1		X2							
209-522380- 2	183 -143	1		X2							
209-522380- 3		1		X1							
209-522380- 5		1		X1							
209-522381	89	2		X2							
	183 -184										
209-522381- 3	183	2		X1							
209-522382	183 -169	1		M		O					
209-522383	177 - 12	1		M		O					
209-52239	183 -107	1	DH 12								
209-52239- 3	182 - 11	1	DH 12	X1							
	183 - 11										
209-52239- 11	182	1	DH 12	X1					R	1560-509-4702	ANAA
	183										
	358										
209-52239- 13	182	1	DH 12	M		O					
	183										
209-52239- 15	182 - 15	1	DH 12	M		O					

PART NUMBER	FIGURE AND INDEX	TOTAL QTY.	MICRO-FILM NUMBER	MAINTENANCE CODE DATA: SOURCE CODE	INST'L CAPABILITY	PRE-INST'L CAPABILITY	RECOVERABILITY	SUPPORT EQUIPMENT	FEDERAL STOCK NUMBER DATA: COGNIZANCE CODE	FEDERAL STOCK NUMBER	MFG. CODE (TSMC)
	183 - 15										
209-52240- 3	182	1	OH 13	X1					R	1560-309-4703	ANAA
	183										
209-52240- 11	182 - 20	1	DH 13	X2							
	183 - 21										
	358										
209-52241- 3	182	1	BW108	X1							
	183										
209-52241- 11	182 - 28	1	BW108	X2					R	1560-309-4704	ANAA
	183 - 29										
	358										
209-52242- 3	182 - 60	1	BW 13	P1	F	O	S		R	1560-309-4705	ANAA
	183 - 60										
	358										
209-52243- 3	183	1	BV157	X1							
209-52243- 4	182 - 94	1	BV157	X1							
	183										
209-52243- 11	183	1	BV157	X2							
209-52243- 12	182 - 93	1	BV157	X2							
	183 - 92										
209-52244	177 - 1	1	DJ 14	M		O					
209-52244- 3	177	1	DJ 14	M		O					
209-52245- 3	182 -102	1	BU119	X1							
	183 -100										
209-52245- 11	182	1	BU119	X2							
	183										
209-52246- 3	182	1	BH 41	M		O					
	183										
209-52246- 5	182	1	BH 41	M		O					
	183										
209-52247	182 -103	4	BP196	M		O					
	183 -101										
209-52248	182 - 9	1	DH 32	M		O					
	183 - 9										
	358										
209-52249	182 - 98	1	BD345	M		O					
	183 - 96										
209-52250- 3	182	1	DR198	X1							
209-52250- 4	182	1	DR198	X1							
209-52250- 5	182	1	DR198	X2							
209-52250- 6	182 -186	1	DR198	X2							
209-52251	182 -165	2	DN150	M		O					
209-52251- 3	183 -166	2	DN150	M		O					
209-52252	182 -158	2	DJ253	M		O					
209-52252- 3	182	2	DJ253	M		O					
209-52253- 3	182	1	DJ295	X2							
209-52253- 5	182 -152	1	DJ295	X2							
209-52254- 3	182 -142	1	DJ298	X1							
209-52254- 5	182 -141	1	DJ298	X2							
209-52255- 3	182 -135	1	DJ297	X1							
209-52255- 5	182 -134	1	DJ297	X2							
209-52256	182 -118	1	DL165	A		F					
209-52256- 3		1	DL165								
209-52256- 11		1	DL165	A		F					
209-52257- 3	182 -122	1	BW121	X1							
209-52257- 5	182 -121	1	BW121	P1	F	O	S		R	1560-037-2614	ANAA
209-52258	182 -125	1	DL146	M		O					
209-52258- 3		1	DL146								
209-52259- 3	182	1	DJ296	X1							
209-52259- 5	182 -119	1	DJ296	P1	F	O	S		R	1560-037-2615	ANAA
209-52260- 3	182	1	DN286	M		O					
209-52260- 5	182	4	DN286	M		O					
209-52260- 7	89 - 65	2	DN286	M		O					
209-52260- 9	182 -136	1	DN286	M		O					
209-52260- 11	182	1	DN286	M		O					
209-52260- 13	182	2	DN286	M		O					
209-52260- 15	182 -187	1	DN286	M		O					
209-52261- 3	182 -150	1	DQ103	M		O					
209-52261- 5	182 -112	1	DQ103	M		O					
209-52261- 7	182 -146	2	DQ103	M		O					
209-52261- 9	182 -156	4	DQ103	M		O					
209-52261- 11	182 -128	2	DQ103	M		O					
	182 -139										
209-52261- 13	182 -132	1	DQ103	M		O					
209-52261- 15	182 -116	1	DQ103								
209-52261- 17	182 -184	1	DQ103	M		O					
209-52261- 19	89 - 85	4	DQ103								
209-52261- 21	89 - 85	4	DQ103								
	182 -174										
209-52261- 23	89	2	DQ103	M		O					
	183 -183										
209-52262- 3	182 -120	1	BD346	M		O					
	183 -121										
209-52262- 5	182 -124	1	BD346	M		O					
	183 -125										
209-52263		1									
209-52263- 3		2	DP301	X1							
209-52263- 5	89 - 84	2	DP301	X2							
209-52263- 7	182 -178	2	DP301	X1							
209-52263- 9		2	DP301	X2							
209-52263- 11	89 - 84	2	DP301	X2							
	182 -177										
209-52264		2	DP174	M		O					
209-52264- 3	182	1	DP174	M		O					
	183 -187										
209-52265	182 -171	2	DP187	M		O					
209-52265- 3	183 -178	2	DP187	M		O					
209-52271		1	DJ 15	M		O					
209-52272		1	DJ 16	M		O					
209-52272- 3		1	DJ 16	M		O					
209-52273		1	DJ 25	M		O					
209-52274	177 - 8	1	DJ 26	M		O					
209-52275	182	1	BH 53	M		O					
	183										
209-52280- 11		1	DJ 10						R	1680-338-1022	ANAA
209-52280- 21		1	DJ 10								
209-52280- 31	177	1	DJ 10	P1	F	O	S				
209-52281		1	DJ 11	X1							
209-52281- 3		1	DJ 11	X1							
209-52282	177 - 5	1	DJ 27	M		O					
209-52284		1	DJ 28	M		O					
209-52287		1	DJ 29	M		O					
209-52288	177 - 11	1	DJ 39	P1	F	O	S		R	1560-033-4766	ANAA
209-52290	182 - 77	1	DH 26	M		O					
	183 - 76										
	358										
209-52291	182 - 4	2	BD352								
	183 - 4										
209-52291- 3	183	1	BD352								
209-52292	182 - 3	2	BD197								
	183 - 3										
209-52292- 3	183	1	BP197								
209-52296	182 - 37	1	BH 55	M		O					
	183 - 38										
209-52301	180 -134	2	BL163	P1	F	O	S		R	1560-346-1128	ANAA
209-52301- 3		2	BL163	X1							
209-52302	180 -105	1	BS159	X1							
209-52303	191 - 9	1	BG 13	P1	F	O	S		R	1560-031-5129	ANAA
209-52305	180 -104	1	BL164	P1	F	O	S		R	1560-031-5130	ANAA
209-52305- 3	180 -106	1	BL164	M		O					
209-52306	180 - 96	1	BS183	P1	F	O	S		R	1560-031-5131	ANAA
209-52307	180 -109	1	BS184	X1							
209-52307- 3	180 -109	1	BS184	P	F	O	S		R	1560-570-2285	ANAA
209-523102		1	BL165	M		O					
209-523102- 3		1	BL165	M		O					
209-523103	180 - 56	1	BL166	M		O					
209-523104	180 - 58	1	BV141	M		O					
209-523104- 3		1	BV141	M		O					
209-523105	180 - 57	1	BV143	M		O					
209-523108		1	BH 72	M		O					
209-523108- 3		1	BH 72	M		O					
209-523109- 1		1	BH 73	M		O					
209-523109- 3		1	BH 73	M		O					
209-523109- 5		1	BH 73	M		O					
209-523109- 11		1	BH 73	M		O					
209-52311	23 - 41	1	BV147	P1	F	O	S		R	1560-031-5132	ANAA
	174 - 53										
	191 - 3										
	194 - 35										
209-523111		1	BH 74	M		O					
209-523111- 3		1	BH 74	M		O					
209-523112	174 - 35	2	BH 75	M		O			R	1560-341-4666	ANAA
209-523114	180 -122	1	DR355	A		F					
209-523114- 3		1	DR355	M		O					
209-523114- 11	180	1	DR355	M		O					
209-523115	174 - 48	1	DR354	A		F					
	180 -126										
	PG. 1003										
209-523115- 3		1	DR354	M		O					
209-523115- 31	180	1	DR354	A		F					
209-523116	180 -125	1	DR353	A		F					
209-523116- 3		1	DR353	M		O					
209-523116- 31	180	1	DR353	A		F					
209-523118	174 - 74	1	BL172	M		O					
209-523119- 1		1									
209-523119- 2		1									
209-523119- 3		1									
209-523119- 4		1									
209-523120		1	BD353	M		O					
209-523121	174 - 12	1	BH 76	M		O					
209-523122- 3	174 - 10	1	BH 77	M		O					
209-523122- 5		1	BH 77	M		O					
209-523123	174 - 11	1	BH 78	X1							
209-523124	174 - 85	1	BH 79	P1	F	O	S		R	1560-346-1133	ANAA
209-523124- 3		1	BH 79	X1							
209-523125	174 - 1	1	DR350	P1	F	O	S		R	1560-343-9132	ANAA
	174 - 64										
209-523125- 11	174 - 1	1	DR350								
	174 - 64										
209-523126		1	BD354	M		O					
209-523127	23 - 48	1	DR326	P1	F	O	S		R	1560-694-8023	ANAA
	174 - 75										
209-523128		1	DR330								
209-523128- 3	174 - 74	1	BY255	P1	F	O	C		R	1560-597-8436	ANAA
209-523129- 3		2	BW 25	X1							
209-523129- 11	180 -134	2	BW 25	P1	F	O	S		R	1560-508-6841	ANAA
209-523130- 3		1	DR329	X1							
209-523130- 11	174 - 85	1	DR329	P1	F	O	S		R	1560-508-6842	ANAA
209-523131- 3		1	BX 24	X1							
209-523131- 4		1	BX 24	X1							
209-523131- 11	180 -164	1	BX 24	P1	F	O	S		R	1560-694-8024	ANAA
209-523131- 12	180	1	BX 24	P1	F	O	S		R	1560-694-8025	ANAA
209-523132	194 - 24	1	BS 94	M		O					
209-523132- 3		1	BS 94	M		O					
209-523133	174 - 9	1	DG 68								
209-523134	180 -150	2	BU 48	P1	F	O	S		R	1560-348-7604	ANAA
209-523134- 3		2	BU 48	X1							
209-523134- 11	180	2	BU 48	X1							
209-52314	174 - 16	2	BL174	M		O					
209-52314- 3		1	BL174	M		O					
209-52314- 5		1	BL174	M		O					
209-52314- 21	174 - 14	2	BL174	M		O					
	180 -124										
209-52314- 31		2	BL174	M		O					
209-52314- 41	180	1	BL174	M		O					
209-523149	180 -149	1	BU 40	P1	F	O	S		R	1560-348-7941	ANAA
209-523149- 3		2	BU 40	X1							
209-523149- 11	180	1	BU 40	X1							
209-52315	23 - 14	1	DQ127	M		O					
209-52315- 3		1	DQ127	M		O					

PART NUMBER	FIGURE AND INDEX	TOTAL QTY.	MICRO-FILM NUMBER	MAINTENANCE CODE DATA: SOURCE CODE	INSTL CAPABILITY	PRE-INSTL CAPABILITY	RECOVERABILITY	SUPPORT EQUIPMENT	FEDERAL STOCK NUMBER DATA: COGNIZANCE CODE	FEDERAL STOCK NUMBER	MFG. CODE (TSMC)
209-52315- 5		1	DQ127	M		O					
209-52315- 7		1	DQ127	M		O					
209-52315- 9		1	DQ127	M		O					
209-52315- 11	23	1	DQ127	M		O					
209-523151	180 -151	2	CA214	P1	F	O	S		R	1560-348-8117	ANAA
209-523151- 3	180	2	CA214	P1	F	O	S				
209-523151- 11	180	1	CA214	X1							
209-523152	180 -152	2	CA215	P1					R	1560-348-8118	ANAA
209-523152- 3		2	CA215	X1							
209-523152- 11	180	1	CA215	X1							
209-523153	174 - 8	1	DG 69								
209-523154- 1	17 - 46	1		P1	F	O	C		R	1560-544-8562	ANAA
209-523154- 2	17	1		P1	F	O	C		R	1560-544-8569	ANAA
209-523157	175 - 83	1	DQ281						R	1560-571-7093	ANAA
	175 - 84										
209-523158		1	DQ282	U					R	1560-571-7094	ANAA
209-523159- 3		1	DQ283								
209-523160- 1	123 -161	1	DL115	M		O					
	125 - 84	1									
209-523160- 2	123 -162	1	DL115	M		O					
	125 - 85	1									
209-523160- 3		1	DL115	M		O					
209-523160- 4		1	DL115	M		O					
209-523161- 1	123 -159	1	DL116	M		O					
	125 - 82	1									
209-523161- 2	123 -160	1	DL116	M		O					
	125 - 83	1									
209-523161- 3		1	DL116	M		O					
209-523161- 4		1	DL116	M		O					
209-523163	175 - 47	1	DP 13								
	180 -128										
209-523163- 3	175 - 51	1	DP 13	M		O					
209-523163- 31	175	1	DP 13								
209-523164	175 - 42	1	DL215								
	180 -123										
209-523164- 3		1	DL215	M		O					
209-523164- 11	180	1	DL215								
209-523166	175 -105	1	DM100								
209-523167	175 -101	1	DQ284						R	1560-571-7097	ANAA
209-523167- 3	175 -102	1	DQ284								
209-523168	175 - 4	1	DP 87	P1	F	O	S		R	1560-571-7098	ANAA
209-523169	175 - 18	1	DS 98								
209-52317	174 - 61	1	DR328	P1	F	O	S		R	1560-091-5133	ANAA
	174 - 90										
	175 - 12										
209-523170- 3		1		M		O					
209-523171	175 - 15	1	DL272								
209-523172	175 - 17	1	DL273								
209-523174	175 - 14	1	DL274	M		O					
209-523175	175 - 10	1	DL275	M		O					
209-523177	175 - 16	1	DL276								
209-523178	175 - 44	1	DP 12								
	180 -127										
209-523178- 3		1	DD 12	M		O					
209-523178- 11	180	1	DP 12								
209-523179		1	DL240						R	1560-571-7002	ANAA
209-523180	23 - 53	1	DR347	P1		O	S		R	1560-575-2179	ANAA
	175 - 83										
	175 - 84										
209-523181		1	DP262								
209-523182- 3	175	1	DP265	X1							
209-523182- 11	175 -101	1	DP265	P1		O	S		R	1560-575-2182	ANAA
209-523183		1	DP256								
209-523184	175 -105	1	DP259	X2							
209-523185	175 - 52	1	DQ 29						R	5340-571-7003	ANAA
209-523186	180	1	DN289	M		O					
209-523187		1	DP141	M		O					
209-523188		1	DP142	M		O					
209-52320	180 - 78	1	DP142	M		O					
209-52320- 3		1	DP142	M		F					
209-52321	180 - 77	1	BD356	M		O					
209-52321- 3		1	BD356	M		F					
209-52322	180 - 80	1	BD357	M		O					
209-52322- 3		1	BD357	M		F					
209-52323	180 - 81	1	BD358	M		O					
209-52323- 3		1	BD358	M		F					
209-52324	191 - 3	1	DJ 68								
209-52325	180 -107	1	BH 56	X1							
209-52326- 1		1	DN265								
209-52326- 2		1	DN265								
209-52326- 11	357	1	DN265	U							
209-52326- 12	357	1	DN265	U							
209-52330	194 - 21	1	BW 39	X2							
209-523301		1	DQ227	U							
209-52331	180 - 63	1	BL175	A							
	194										
209-52331- 1		1	BL175								
209-523310		2	DP 88								
209-523310- 11	175 - 19	2	DP 88	P1	F	O	S		R	1560-601-0340	ANAA
209-523311	175 - 22	1	DM 64						R	5340-571-7004	ANAA
	180										
209-523312	175 - 27	1	DD 30								
209-523313	175	1	DL278						R	1560-571-7100	ANAA
209-523314	175 - 39	1	DL216								
209-523315	175 - 37	1	DL241								
209-523316	138 - 9	2	DM 49	M		O					
	176 - 60										
209-523317		2	DL315	M		O					
209-523317- 2		1	DL315								
209-523317- 3				U							
209-523317- 5	175 - 35	1	DL315	M		O					
209-523318		1	DL279								
209-523319- 1	21	1	DL338								
209-523319- 2	21	1	DL338								
209-523320- 1	175 - 66	1	DR 69						R	1560-571-7101	ANAA
209-523320- 2	175	1	DR 69						R	1560-571-7102	ANAA
209-523321- 1	21 -142	1	DQ285	M		O					
	175 - 56										
209-523321- 2	21	1	DQ285	M		O					
	175										
209-523322- 11	21 -136	1	DN117								
209-523322- 12	21	1	DN117								
209-523323- 1	21 -141	1	DL182								
209-523323- 2	21	1	DL182								
209-523324	175 - 71	2	DL317								
	176 - 2										
209-523324- 3		1	DL317	M		O					
209-523324- 31		1	DL317								
209-523325		1	DL280						R	1560-571-7005	ANAA
209-523326- 1	176 - 7	1	DP 89						R	1560-571-7105	ANAA
209-523326- 2	176	1	DP 89						R	1560-571-7106	ANAA
209-523327- 1	176 - 12	1	DP 90						R	1560-571-7158	ANAA
209-523327- 2	176	1	DP 90						R	1560-571-7156	ANAA
209-523327- 3		1	DP 90	M		O					
209-523327- 4		1	DP 90	M		O					
209-523328	176 - 17	2	DL243								
209-523329	176 - 18	1	DP143						R	5340-571-7019	ANAA
209-52333- 1		1									
209-52333- 2		1									
209-523330- 1	176 - 36	1		M		O					
209-523330- 2	176	1		M		O					
209-523331- 1		1									
209-523331- 2		1	DP 91								
209-523332- 1	176 - 28	1	DL340						R	1560-571-7139	ANAA
209-523332- 2	176	1	DL340						R	1560-571-7140	ANAA
209-523333		1	DL321								
209-523333- 1	176 - 43	1							R	1560-571-7141	ANAA
209-523333- 2	176	1							R	1560-571-7142	ANAA
209-523334	176 - 47	1	DL217						R	1560-571-7107	ANAA
209-523335	176 - 53	1	DN287	M		O					
209-523336- 1	176 - 48	1	DL282	M		O					
209-523336- 2	176 - 51	1	DL282	M		O					
209-523337- 1		1	DL283								
209-523337- 2		1	DL283								
209-523338- 1		1	DQ286						R	1560-571-7110	ANAA
209-523338- 2		1	DQ286								
209-523339	176 - 82	2	DL325	M		O					
209-52334	180 - 76	1	DQ 56	M		O					
	200 - 42										
209-52334- 3		1	DQ 56	M		O					
209-52334- 5		1	DQ 56	M		O					
209-52334- 7		1	DQ 56	M		O					
209-52334- 9		1	DQ 56	M		O					
209-52334- 11		1	DQ 56	M		O					
209-523340	176 - 80	2	DL284	M		O					
209-523341	176 - 83	4	DL245						R	1560-571-7112	ANAA
209-523342	176 - 89	1	DL246								
209-523343	176 - 84	1	DL205								
209-523344	176 -103	1	DL324						R	1560-571-7113	ANAA
209-523345	176 -107	1	DL247								
	176 -115										
209-523346	176 -104	1	DL248								
209-523347- 3	176 -110	1	DL249								
209-523347- 5	176 -118	1	DL249								
209-523347- 7	176 -125	1	DL249								
209-523348- 1	176 -131	3	DR 1								
	176 -132										
209-523348- 2	176	3	DR 1								
209-523349- 1	176 -142	2	DL341								
	176 -146										
209-523349- 2	176	2	DL341								
209-523349- 3	176 -138	1	DL341								
209-523349- 4	176	1	DL341								
209-523350	176 -111	1	DL218						R	1560-571-7108	ANAA
209-523351	176 -112	1	DL250								
209-523353	176 -123	1	DL251								
209-523354- 1	176 - 73	1	DM 46	M		O					
209-523354- 2	176	1	DM 46	M		O					
209-523355- 1	176 -102	1	DM 31								
209-523355- 2	176	1	DM 31								
209-523356	271	1	DM 59						R	1680-571-7116	ANAA
209-523356- 3	271 - 19	1	DM 59								
209-523357	176 -120	1	DR 2								
209-523358- 1		1									
209-523358- 2		1									
209-523358- 3		1		X1							
209-523358- 4		1		X1							
209-523358- 11	175 - 66	1	DP263	P1		O	S		R	1560-575-2180	ANAA
209-523358- 12	175	1	DP263	P1		O	S		R	1560-575-2181	ANAA
209-523359		1	DR341								
209-523359- 1	21 -142	1		P1		O	S		R	1560-586-4576	ANAA
209-523359- 2	21	1		P1		O	S		R	1560-586-4577	ANAA
209-523360		1	DP260								
209-523360- 3		1		X1							
209-523360- 4		1		X1							
209-523360- 11	176 -131	3							R	1560-589-8403	ANAA
	176 -132										
209-523360- 12	176	3							R	1560-589-8404	ANAA
209-523361- 4		1		X1							
209-523361- 11	176 - 93	1	DP255	P1		O	S		R	1560-588-4837	ANAA
	176 - 94										
209-523361- 12	176	1	DP255						R	1560-588-4836	ANAA
209-523362		2	DP164	P1	F	O	S		R	1560-037-2616	ANAA
209-523362- 3	175 - 40	1		M		O					
209-523363		1	DP165	M		O					
209-523364- 1	176 -147	1	DQ117	M		O					
209-523364- 2	176	1	DQ117	M		O					
209-523364- 3	176 -143	1	DQ117	M		O					
209-523364- 4	176	1	DQ117	M		O					
209-523364- 5	176 -139	1	DQ117	M		O					

PART NUMBER	FIGURE AND INDEX	TOTAL QTY.	MICRO-FILM NUMBER	MAINTENANCE CODE DATA: SOURCE CODE	INSTL CAPABILITY	PRE-INSTL CAPABILITY	RECOVERABILITY	SUPPORT EQUIPMENT	FEDERAL STOCK NUMBER DATA: COGNIZANCE CODE	FEDERAL STOCK NUMBER	MFG. CODE (TSMC)
209-52336A- 6	176	1	DO117	M		0					
209-523365	271	1	DS 7	X1							
209-523368		1									
209-523368- 3		1									
209-52337		1	BL176	M		0					
209-523377	175 - 91	1		P1		0	S		R	1560-575-1313	ANAA
209-523377- 3	175 - 92	1		X1							
209-523378	175 - 96	1		P					R	1560-590-8790	ANAA
209-52338		1	BL177	M		0					
209-52338- 1	176 - 93	1									
	176 - 94										
209-52338- 2	176	1									
209-523385	175 - 36	1		P		0	C		R	1560-594-8646	ANAA
209-52344	180	1	DR 92	P	F	0	C		R	1560-570-2286	ANAA
209-52344- 3		1	DR 92	M		0					
209-52345	180 -121	1	BL178								
209-52345- 3		1	BL178	M		0					
209-52345- 11	180	1	BL178	A		F					
209-52346	180 - 82	1	BV283								
209-52347	180 -119	1	BV142	P1	F	0	S		R	1560-570-2287	ANAA
209-52348	191 - 19	1	BL179	P1	F	0	S		R	1560-570-2288	ANAA
209-52349- 3		1	BL180	X1							
209-52349- 11	174 - 56	1	BL180	P1	F	0	S		R	1560-031-5134	ANAA
209-52350	174 - 1	1	BL181	P1	F	0	S		R	1560-031-5135	ANAA
	174 - 64										
209-52351		1	BH 58	X1							
209-52352	176 -119	1									
209-52352- 3		1	BH 59	M		0					
209-52352- 5		1	BH 59	M		0					
209-52353		1	BD359	M		0					
209-52355		1	BD360	M		0					
209-52356		1	BD361	M		0					
209-52357		1	DG 70	X1							
209-52357- 3		1	DG 70	X1							
209-52357- 5		1	DG 70	M		0					
209-52357- 11	174 - 5	1	DG 70	M		0					
209-52358		1	DR 76	M		0					
209-52360		1	DR 95	M		0					
209-52361		1	BH 62	M		0					
209-52362	180 -149	1	BL182						R	1560-037-2616	ANAA
209-52362- 3		2	BL182	X1							
209-52362- 11		2	BL182	X1							
209-52364	180 -118	1	BH 63	M		0					
209-52365		2	BU216	M		0					
209-52365- 5		4	BU216	M		0					
209-52366- 3		1	DJ 91	X1							
209-52366- 4		1	DJ 91	X1							
209-52366- 11	180 -158	1	DJ 91	P1	F	0	S		R	1560-031-5136	ANAA
209-52366- 12	180	1	DJ 91	P1	F	0	S		R	1560-031-5137	ANAA
209-52367- 3		2	DJ158	X1							
209-52367- 11	180 -133	1	DJ158	P1	F	0	S		R	1560-037-2617	ANAA
209-52368- 3		1	BV139	X1							
209-52368- 4		1	BV139	X1							
209-52368- 11	180 -155	1	BV139	P1	F	0	S		R	1560-037-2618	ANAA
209-52368- 12	180	1	BV139	P1	F	0	S		R	1560-037-2619	ANAA
209-52369	180 -151	2	BL183	P1	F	0	S		R	1560-037-2620	ANAA
209-52369- 3		2	BL183	X1							
209-52369- 11		2	BL183	X1							
209-52370	180 -113	1	BH 64	M		0					
209-52371- 1	180 -136	1	CP 23	P1	F	0	S		R	1560-031-5138	ANAA
209-52371- 2	180	1	CP 23	P1	F	0	S		R	1560-031-5139	ANAA
209-52372	174 - 34	2	BL184	M		0					
209-52374	180	2	BD363	M		0					
209-52375- 1	180 -143	1	BO 29	M		0					
209-52375- 2	180	1	BO 29	M		0					
209-52376- 3		1	CB107	M		0					
209-52376- 5		1	CB107								
209-52376- 7		1	CB107	M		0					
209-52376- 9		1	CB107	M		0					
209-52376- 11		1	CB107								
209-52376- 13		1	CB107	M		0					
209-52376- 15		1	CB107	M		0					
209-52376-101	180 - 76	1	CB107	M		0					
209-52377- 1	180 -147	1	BX126	M		0					
209-52377- 2	180	1	BX126	M		0					
209-52378	174 - 4	1	DR 94	M		0					
209-52379	194 - 24	1	DL252	M		0					
209-52380- 1	174 - 24	1	BL185	U							
209-52380- 2	174 - 25	1	BL185	U							
209-52381- 1	174 - 41	1	BL186	M		0					
209-52381- 2	174	1	BL186	M		0					
209-52381- 3		1	BL186	M		0					
209-52381- 4		1	BL186	M		0					
209-52382	174 - 49	1	BL187	M		0					
209-52382- 3		1	BL187	M		0					
209-52383- 1	174 - 48	1	BM 68	M		0					
209-52383- 2	174	1	BM 68	M		0					
209-52384	174 - 23	1	BM 69	M		0					
209-52385	174 - 17	1	BL188	M		0					
209-52386- 1	174 - 40	1	BM 70	M		0					
209-52386- 2	174	1	BM 70	M		0					
209-52387	174	1	BL189	M		0					
209-52387- 3		1	BL189	M		0					
209-52388	174 - 34	2	BL190	M		0					
209-52389	180	1	BM 71	M		0					
209-52389- 3	180 - 71	1	BM 71	M		0					
209-52393		2									
209-52394	194 - 11	1	BL191	M		0					
209-52395	180 - 72	1	BL192	M		0					
209-52397		1									
209-52398		1	BL193								
209-52398- 3		1	BL193								
209-52398- 5		1	BL193								
209-52398- 7		1	BL193	M		0					
209-52398- 9		1	BL193	M		0					

PART NUMBER	FIGURE AND INDEX	TOTAL QTY.	MICRO-FILM NUMBER	MAINTENANCE CODE DATA: SOURCE CODE	INSTL CAPABILITY	PRE-INSTL CAPABILITY	RECOVERABILITY	SUPPORT EQUIPMENT	FEDERAL STOCK NUMBER DATA: COGNIZANCE CODE	FEDERAL STOCK NUMBER	MFG. CODE (TSMC)
209-52398- 11		1	BL193	M		0					
209-52399	194 - 7	1	BL194	P1	0	0	S		R	1560-569-7133	ANAA
209-52403	184	1	BW 36	A		F					
209-52406	184	1	BL195	A		0					
209-52406- 3	184	1	BL195	M		0					
209-52407	184	1	BH 80	A		0					
209-524101		1	CB 18								
209-524101- 3		1	CB 18								
209-524102	188 - 15	1	CB 15								
209-524102- 3		1	CB 15								
209-524103	188 - 14	1	CB 19	M		0					
209-524103- 3		1	CB 19	M		0					
209-524104	188 - 30	1	CB 20	M		0					
209-524104- 3		1	CB 20	M		0					
209-524105	188 - 31	1	CB 21	M		0					
209-524105- 3		1	CB 21	M		0					
209-524106	188 - 8	2	CB 22	M		0					
209-524106- 3		1	CB 22	M		0					
209-524107	188 - 24	1	DB232								
209-524107- 3		1	DB232								
209-524108	188 - 16	1	CB 71	P1	F	0	S		R	1560-522-8877	ANAA
209-524109	188 - 17	1	CB 41	P1	F	0	S		R	1560-522-8879	ANAA
209-52411	190 - 7	1	BS 79	M		0					
	190 - 50										
209-52411- 3	190	1	BS 79								
209-524110	188	1		A		F			R	1560-510-1142	ANAA
209-524114	189 -110	1	DM251	P1	F	0	S		R	1560-560-6356	ANAA
209-524115	189 -120	1	DJ 30	X1							
209-524115- 3		1	DJ 30	X1							
209-524116	189 -114	1		X1							
209-524117	189 -115	1		M		0					
209-524118	189 -119	1	DJ 31	M		0					
209-524119	189 -118	1	DH252	M		0					
209-524120		1		M		0					
209-524121	189 -117	1		M		0					
209-524130	189 -106	1	DJ 32	M		0			R	1560-534-4116	ANAA
209-524131	189 - 93	2	DJ 19	M		0					
209-524132	189 - 79	1		M		0					
209-524133	189 -105	1		M		0					
209-524157	189 -116	1	DG189								
209-524158		1		M		0					
209-524159		1		M		0					
209-52416	188 - 17	1	CB 91	P1	F	0	S		R	1560-697-8438	ANAA
209-524161		1		M		0					
209-524162	189 - 14	1	DH 33	M		0					
209-524162- 3		1	DH 33	M		0					
209-524163	189 - 13	1	DH 34	M		0					
209-524163- 3		1	DH 34	M		0					
209-52417	188 - 23	1	CB 86	P1	F	0	S		R	1560-697-8439	ANAA
	358										
209-524171	123 -110	1		A		F					
	189 - 64										
	294 - 1										
	358										
209-524172	189 - 19	1	DO 65	P1	F	0	S		R	1560-569-7143	ANAA
	358										
209-524173		1	DP 37	X2							
209-524174- 3	189 -102	1		X1							
209-524174- 11	189	1		X2							
209-524175- 3	189 - 97	1		X1							
209-524175- 11	189	1		X2							
209-524176	189	1		M		0					
209-524176- 3	189 - 99	1		M		0					
209-524177	189 -111	1		M		0					
209-524178	189 - 83	1	DJ 12	M		0			R	1560-534-4117	ANAA
209-524178- 3		1	DJ 12	M		0					
209-524179	189 - 73	1		M		0			R	1560-534-4118	ANAA
209-52416	188 - 13	1	CB 70	P1	F	0	S		R	1560-697-8440	ANAA
	189 - 78										
	189 - 76	1									
209-524181		1		M		0					
209-524182		1		M		0					
209-524183	189 - 26	1	DH 27	M		0					
209-524184	189 - 23	1	DH 28	M		0					
	358										
209-524186	189 - 44	1	DR128	P1	F	0	S		R	1560-534-4119	ANAA
	189 - 45										
	358										
209-524186- 11	189 - 43	1	DR128						R	1560-571-5497	ANAA
	189 - 45										
209-524187	189 - 62	1		X1							
209-524188	189 - 61	1	DG 15	M		0					
209-524189	189 - 60	1		P1	F	0	S		R	1560-531-7709	ANAA
209-52419	188 - 16	1	DM278	P1					R	1560-697-8441	ANAA
	189 - 58	1									
	189 - 59										
209-524190- 3		1		X1							
209-524191	189 - 56	1	DJ183	M		0					
209-524191- 3	189 - 57	1	DJ183	X1							
209-524192	189	1	DG 18	X1							
209-524192- 3	189 - 53	1	DG 18	X1							
209-524193	189	1	DG 19	M		0					
209-524193- 3	189 - 48	1	DG 19	X1							
209-524194	189 - 52	1		M		0					
209-52420	188 - 41	1	CM306	P1	0	0	S		R	1560-697-8442	ANAA
209-52421		1	CB 44	A		0					
209-52422- 1	181	1	BV151	M		0					
209-52422- 2	181	1	BV151	M		0					
209-52422- 3		1	BV151	M		0					
209-52422- 4		1	BV151	M		0					
209-52422- 5		1	BV151	M		0					
209-52422- 6		1	BV151	M		0					
209-52422- 7		1	BV151	M		0					
209-52422- 8		1	BV151	M		0					
209-52422- 9		1	BV151	M		0					

PART NUMBER	FIGURE AND INDEX	TOTAL QTY.	MICRO-FILM NUMBER	MAINTENANCE CODE DATA: SOURCE CODE	INST'L CAPABILITY	FIR-INST'L CAPABILITY	RECOVERABILITY	SUPPORT EQUIPMENT	COGNIZANCE CODE	FEDERAL STOCK NUMBER DATA: FEDERAL STOCK NUMBER	MFG. CODE (TSMC)
209-52422- 10		1	BV151	M		O					
209-52422- 11		1	BV151	M		O					
209-52422- 12		1	BV151	M		O					
209-52422- 13		1	BV151	M		O					
209-52422- 14		1	BV151	M		O					
209-52422- 15		2	BV151	M		O					
209-52422- 17		2	BV151	M		O					
209-52422- 19		2	BV151	M		O					
209-52422- 21		1	BV151	M		O					
209-52422- 22		1	BV151	M		O					
209-52422- 23		1	BV151	M		O					
209-52422- 25		1	BV151	M		O					
209-52422- 27		1	BV151								
209-52422- 31		1	BV151	M		O					
209-52422- 32		1	BV151	M		O					
209-52422- 41		1	BV151	M		O					
209-52422- 42		1	BV151	M		O					
209-52424- 1		1	BD369	M		O					
209-52424- 2		1	BD369	M		O					
209-52425- 1		1	BD370	M		O					
209-52425- 2		1	BD370	M		O					
209-52426	185	1	BH 81	M		O					
209-52427	185 - 60	1	BD371	M		O					
	185 - 62										
209-52428	184 -136	2									
	185 - 96										
209-52428- 9	184	2									
		2	BD372	M		F					
209-52429	185 - 66	1	BD373	P	F	O	C		R	1560-663-1706	ANAA
209-52430	185 - 65	1	BD374	M		O					
209-52431- 1	184 - 15	2	BE346	P1	F	O	S		R	1560-343-9133	ANAA
	185 - 15										
209-52431- 2	184	1	BE346	P1	F	O	S		R	1560-343-9134	ANAA
	185										
209-52431- 3		1	BE346	X1							
209-52431- 4		1	BE346	X1							
209-52436		1									
209-52438		1	BD376	M		O					
209-52442	185 - 32	1	BH 82	M		O					
209-52444	185 - 28	1		M		O					
209-52446	185 - 47	1	BV300	X2							
209-52447	185 - 67	1	DG294	X2							
209-52448	185 - 37	1	DG158	M		O					
209-52448- 3		1	DG158	M		F					
209-52449	185 - 38	1	BD378	M		O					
	185 - 61										
209-52449- 3		1	BD378	M		F					
209-52450	91 - 55	1	DH145	M		O					
	189 - 41										
209-52451		1	DR 78								
209-52452	189 - 63	1	DG 14	M		O					
209-52453	184 - 29	2									
209-52453- 3	184	2	BH 83	M		O					
209-52458	189 - 55	1		M		O					
209-52466		1	BW 6	X2							
209-52475	188	1	DJ 69	M		O					
	189 - 34										
	358										
209-52475- 3	188 - 68	1	DJ 69	M		O					
	189 - 35										
209-52475- 5	188	1	DJ 69	M		O					
	189										
209-52477	188 - 6	1	BD379	M		O					
209-52477- 3		1	BD379	M		O					
209-52478	188 - 7	1	BD380	M		O					
209-52478- 3		1	BD380	M		O					
209-52480		1	BS 78	U							
209-52480- 11		1	BS 78	U							
209-52482	188 - 60	1	BW 34	X2							
	358										
209-52483	188 - 56	1	BT103	P1	F	O	S		R	1560-091-5140	ANAA
	358										
209-52485		1	DJ227	U							
209-52485- 11		1	DJ227	U							
209-52486	188 - 64	1	BH 87	M		O					
	189 - 39										
209-52487- 1	185 - 36	2	BD381	M		F					
209-52487- 3	185	1	BD381	M		F					
209-52488	185 - 54	1	BL198	X2							
209-52489		1	BD382	M		O					
209-52489- 3		1	BD382	M		F					
209-52490	185 - 59	1	DG156	M		O					
209-52490- 3		1	DG156	M		F					
209-52491		1	BD384	M		O					
209-52492		1	BL199								
209-52493	185 - 55	1	BD385	M		O					
209-52494		1	BL200	M		O					
209-52494- 11		1	BL200	M		O					
209-52495	190	1	BL201	M		O					
209-52495- 3	190 - 16	1	BL201	M		O					
209-52496		1	BH 88	M		O					
209-52497	92	1	BH 89	M		O					
	190										
209-52497- 11	190 - 22	1	BH 89	M		O					
209-52498	190 - 20	1	BL202	M		O					
209-52499	190	1	BH 90	M		O					
209-52499- 3	190	1	BH 90	M		O					
209-52516		1									
209-52517	182 - 70	2		M		O					
	195										
	205 - 42										
209-52526	182 - 69	1	DL264	M		O					
209-52554	182 - 68	1	DH 35	A		F					
	358										
209-52555	182 - 71	1	BV258	M		O					

PART NUMBER	FIGURE AND INDEX	TOTAL QTY.	MICRO-FILM NUMBER	MAINTENANCE CODE DATA: SOURCE CODE	INST'L CAPABILITY	FIR-INST'L CAPABILITY	RECOVERABILITY	SUPPORT EQUIPMENT	COGNIZANCE CODE	FEDERAL STOCK NUMBER DATA: FEDERAL STOCK NUMBER	MFG. CODE (TSMC)
209-52559- 3		1	BV258	M		O					
209-52596	182 - 64	1	DH 36	M		O					
	358										
209-52601		1	BT217	U							
209-52609		1	BH 91								
209-52609- 3		1	BH 91	M		O					
209-526102- 3		1	CN 30	M		O					
209-526102- 5		1	CN 30	X1							
209-526102- 21		1	CN 30	P1	F	O	S		R	1560-346-1135	ANAA
209-526106- 3		3	BU 4	M		O					
209-526106- 5		1	BU 4	M		O					
209-526109- 1	172 - 15	1									
209-526109- 2	172	1									
	172	1									
209-526109- 21	172 - 87	1									
209-526110- 3		1	BW 69	X1							
209-526110- 4		1	BW 69	X1							
209-526111- 1	172	1									
209-526111- 2	172	1									
209-526111- 3	172 - 40	1									
209-526111- 4	172	1									
209-526112- 1		1	BV154	P1	O	O	S		R	1560-570-2291	ANAA
209-526112- 2		1	BV154	P1	O	O	S		R	1560-570-2292	ANAA
209-526112- 3		1	BV154	X1							
209-526113- 4		1	BX 81	X1							
209-526114		1	BU 2	M		O					
209-526115- 1	171 - 70	1	CC108	M		O					
209-526115- 2	171	1	CC108	M		O					
209-526115- 3		1	CC108	M		O					
209-526115- 4		1	CC108	M		O					
209-526116- 1	171	1	CC107	M		O					
209-526116- 2	171	1	CC107	M		O					
209-526116- 3		1	CC107	M		O					
209-526116- 4		1	CC107	M		O					
209-526117- 1	171 - 86	1	CC112	M		O					
209-526117- 2	171	1	CC112	M		O					
209-526117- 3		1	CC112	M		O					
209-526117- 4		1	CC112	M		O					
209-526118	172 - 24	1									
	172 - 96	1									
209-526119- 1	172 -123	1									
209-526119- 2	172	1									
209-52612		2	BD389	M		O					
209-526120- 1	172 - 54	1									
209-526120- 2	172	1									
209-526121- 1	172 - 41	1									
209-526121- 2	172	1									
209-526122		2	BD390	M		O					
209-526123- 3		1		X1							
209-526123- 4		1		X1							
209-526123- 11	171 - 70	1		P1	O	O	S		R	1560-570-2293	ANAA
	357										
209-526123- 12	171	1		P1	O	O	S		R	1560-570-2294	ANAA
	357										
209-526124- 3	172	1									
209-526124- 5	172 -108	1									
209-526124- 11	172	1									
209-526124- 21	172 -102	1									
209-526125- 3	172 - 30	1									
209-526126- 11		1	CN 31	M		O					
209-526126- 12		1	CN 31	M		O					
209-526126- 13		1	CN 31	M		O					
209-526127- 3		3	CN104	M		O					
209-526127- 5		1	CN104	M		O					
209-526128- 3		3	CN 33	M		O					
209-526128- 7		1	CN 33	M		O					
209-526129- 5	172 - 27	1									
209-526129- 6	172	1									
	172	1									
209-526129- 7	172 - 99	1									
209-526129- 11	172	1									
209-526129- 12	172	1									
	172	1									
209-526129- 21	172	1									
209-52613- 4		1		M		O					
209-526130- 3		1	CS156	X1							
209-526130- 4		1	CS156	X1							
209-526130- 11	171 - 86	1	CS156	P1	O	O	S		R	1560-570-2295	ANAA
	357										
209-526130- 12	171	1	CS156	P1	O	O	S		R	1560-570-2296	ANAA
	357										
209-526131- 3	171 - 44	1	CS158	X1							
209-526131- 4	171	1	CS158	X1							
209-526131- 11	171	1	CS158	P1	O	O	S		R	1560-569-7179	ANAA
209-526131- 12	171	1	CS158	P1	O	O	S		R	1560-569-7180	ANAA
209-526133- 7	172	1									
	172 - 29	1									
209-526133- 9	172 -101	1									
209-526133- 11	172	1									
	172	1									
209-526133- 21	172	1									
209-526134- 5		3	BU 29	X1							
209-526134- 7	172 -122	1									
209-526134- 11	172 - 12	1									
209-526134- 21	172	1									
209-526135- 1	173 - 18	1	DQ149	M		O					
209-526135- 2	173	1	DQ149	M		O					
209-526135- 3		1	DQ149	M		O					
209-526135- 4		1	DQ149	M		O					
209-526135- 7		2	DQ149	M		O					
209-526135- 9		2	DQ149	M		O					
209-526135- 11		2	DQ149	M		O					
209-526135- 13		1	DQ149	M		O					
209-526135- 14		1	DQ149	M		O					
209-526135- 21		1	DQ149	M		O					

PART NUMBER	FIGURE AND INDEX	TOTAL QTY.	MICRO-FILM NUMBER	MAINTENANCE CODE DATA: SOURCE CODE	INSTL CAPABILITY	PRE-INSTL CAPABILITY	RECOVERABILITY	SUPPORT EQUIPMENT	FEDERAL STOCK NUMBER DATA: COGNIZANCE CODE	FEDERAL STOCK NUMBER	MFG. CODE (TSMC)
209-526135- 22		1	DQ149	M		O					
209-526135- 31		1	DQ149	M		O					
209-526135- 32		1	DQ149	M		O					
209-526136- 1	173 - 31	1	DJ 71	M		O					
209-526136- 2	173	1	DJ 71	M		O					
209-526136- 3		1	DJ 71	M		O					
209-526136- 4		1	DJ 71	M		O					
209-526137- 1	173 - 44	1	DM223	M		O					
209-526137- 2	173	2	DM223	M		O					
209-526137- 3		1	DM223	M		O					
209-526138		1	DP 7								
209-526138- 1	173 - 39	1	DP 7	M		O					
209-526138- 2	173	1	DP 7	M		O					
209-526139- 1	173 - 50	1	DJ174	M		O					
209-526139- 2	173	1	DJ174	M		O					
209-526139- 3		1	DJ174	M		O					
209-526139- 4		1	DJ174	M		O					
209-526139- 5		2	DJ174	M		O					
209-526139- 7		2	DJ174	M		O					
209-526139- 8		1	DJ174	M		O					
209-526140	173 - 59	2		M		O					
209-526141	173 - 58	2		M		O					
209-526143	173 - 57	2		M		O					
209-526143- 3		2		M		O					
209-526143- 5		2		M		O					
209-526143- 7		2		M		O					
209-526144	173 - 56	1		A		F					
209-526144- 3		2		M		F					
209-526144- 11	173	1		A		F					
209-526146	173	2	DJ 49						R	1560-571-7117	ANAA
209-526147- 1	173 - 83	2	DP166	M		O					
209-526147- 2	173	2	DP166	M		O					
209-52615		2	BD391	M		O					
209-526151- 1	357	1		U							
209-526151- 2	357	1		U							
209-52617		1	BD392	M		O					
209-52618		1	BD393	M		O					
209-52624	14 -258	4	BD394	M		O					
209-526315- 5		2		M		O					
209-52651- 1	357	1	BY 47	U							
209-52651- 2	357	1	BY 47	U							
209-52652- 1	357	1	BU152	U							
209-52652- 2	357	1	BU152	U							
209-52652- 11		1	BU152	A		F					
209-52652- 12		1	BU152	A		F					
209-52653- 3	172 - 57	1									
209-52653- 5	172	1									
209-52653- 7	172 - 74	1									
	172 - 86	1									
209-52653- 11	172 - 71	1									
209-52653- 13	172 - 84	1									
209-52656- 3	172 -112	1									
	173 - 66										
209-52656- 5	172 - 63	1									
	172 - 90	1									
209-52656- 7	172 -105	1									
209-52656- 9	172 - 94	1									
209-52656- 11	172 -115	1									
209-52656- 13	173 - 70	1	DM135	M		O					
209-52656- 15	173 - 70	1	DM135	M		O					
209-52667- 3	172 -119	1									
209-52667- 5	172 - 70	1									
209-52668	172 - 9	1									
209-52669- 3	172	1									
209-52669- 5	172 -117	1									
209-52669- 7	172	1									
209-52669- 9	172 - 69	1									
	172 -116	1									
209-52669- 11	172 - 67	1									
209-52671		1	BH 93	P1	F	O	C		R	1560-341-4669	ANAA
209-52672		2	BD397	M		O					
209-52674- 3	172 - 1	3									
209-52674- 11	172 -109	1									
209-52676		5	BV165	M		O					
209-52676- 3		4	BV165	M		O					
209-52676- 5		4	BV165	M		O					
209-52676- 7		4	BV165	M		O					
209-52676- 11		4	BV165	M		O					
209-52677	178 - 22	4	BL215	M		O					
209-52677- 3		4	BL215	M		O					
209-52677- 5		4	BL215	M		O					
209-52677- 7		4	BL215	M		O					
209-52677- 11		4	BL215	M		O					
209-52678		2	BX 16	M		O					
209-52678- 3		2	BX 16	M		O					
209-52678- 5		2	BX 16	M		O					
209-52678- 7		2	BX 16	M		O					
209-52678- 9		2	BX 16	M		O					
209-52679	14 -257	15	CA 57	M		O					
209-52679- 11	14	1	CA 57	M		O					
209-52680	123 -169	5									
	193 - 98										
209-52681	123 -168	5	BH 96	P1	F	O	C		R	1560-323-4162	ANAA
	193										
209-52682		6	BL216	M		O					
209-52682- 3		6	BL216	M		O					
209-52682- 5		6	BL216	M		O					
209-52682- 7		6	BL216	M		O					
209-52682- 11		6	BL216	M		O					
209-52685		1	BD398								
209-52686	123 -171	3	BH 98	P1	F	O	C		R	1560-323-4164	ANAA
	193										
	219 -136	3									
209-52686- 5		2	BH 98	X1							
209-52687	123 -170	3	BH 99	P1	F	O	C		R	1560-323-4165	ANAA
	193 - 99										
	219	3									
209-52688- 1	178 - 7	1	BH100	M		O					
209-52688- 2	178	1	BH100	M		O					
209-52689- 1	178 - 9	1	BH101	M		O					
209-52689- 2	178	1	BH101	M		O					
209-52689- 3		1	BH101	M		O					
209-52689- 4		1	BH101	M		O					
209-52689- 5		1	BH101	M		O					
209-52689- 6		1	BH101	M		O					
209-52689- 7		2	BH101	M		O					
209-52690		1									
209-52690- 1	178 - 10	1	DM 50	M		O					
209-52690- 2	178	1	DM 50	M		O					
209-52691		2	BH102	M		O					
209-52692		2	BH103	M		O					
209-52692- 3		2	BH103	M		O					
209-52692- 5		2	BH103	M		O					
209-52693	195 - 52	4	BH104	M		O					
209-52693- 3		2	BH104	M		O					
209-52693- 5		2	BH104	M		O					
209-52695	195 - 53	2	BH105	M		O					
209-52695- 3		2	BH105	M		O					
209-52695- 5		2	BH105	M		O					
209-52696		1	BM340	M		O					
209-52701		1	BT216	U							
209-52702	199 - 37	1	BL218	M		O					
209-52702- 3		1	BL218	M		O					
209-52703	199 - 32	1	BL219	M		O					
209-52703- 3		1	BL219	M		O					
209-52703- 5		1	BL219	M		O					
209-52703- 7		1	BL219	M		O					
209-52703- 11		1	BL219	M		O					
209-52704	197 - 12	1	BL220	M		O					
209-52704- 3		1	BL220	M		O					
209-52705	197 - 23	1	BL221	M		O					
	198 - 18										
209-52705- 3		1	BL221	M		O					
209-52705- 5		1	BL221	M		O					
209-52705- 11		1	BL221	M		O					
209-52706	197 - 16	1	BM109	M		O					
	198 - 21										
209-52706- 3		1	BM109	M		O					
209-52707	197 - 19	1	BM110	M		O					
	198 - 14										
209-52707- 3		1	BM110	M		O					
209-527101- 1	80	1	DM 91	A		F					
209-527101- 2	80	1	DM 91	A		F					
209-527102- 1	80	1		A		F					
209-527102- 2	80	1		A		F					
209-527103		1	DG 21								
209-527104	198	1									
209-52711	197 - 3	1	BD401	M		O					
	199 - 31										
209-52711- 3		1	BD401	M		O					
209-527111- 1		1	DQ 82						R	1560-571-7143	ANAA
209-527111- 2		1	DQ 82						R	1560-571-7144	ANAA
209-527111- 3		1	DQ 82								
209-527111- 4		1	DQ 82								
209-527112		1							R	1560-571-7118	ANAA
209-527112- 1		1	DQ 83								
209-527112- 2		1	DQ 83								
209-527112- 3		1	DQ 83								
209-527113		1	DM 66						R	1560-571-7014	ANAA
209-527114- 1		1	DM 51								
209-527114- 2		1	DM 51								
209-52712	197 - 2	1	BD402	M		O					
	198 - 2										
	199 - 26										
209-52712- 3		1	BD402	M		O					
209-52713	197 - 31	1	BD403	M		O					
	198 - 26										
209-52713- 3		1	BD403	M		O					
209-52714		1									
209-52715		1	DQ104	M		O					
209-52716	197 - 4	3	BD404	M		O					
	198 - 3										
	199										
209-52716- 3		1	BD404	M		O					
209-52717	197 - 34	2	BY 91	M		O					
	198 - 29										
209-52726		1		M		O					
209-52726- 3		1		M		O					
209-52726- 5		1		M		O					
209-52728	197 - 35	1	BL222	M		O					
	198 - 30										
209-52728- 3		1	BL222	M		O					
209-52728- 5		1	BL222	M		O					
209-52729	197 - 41	1	BS186	M		O					
	198 - 36										
209-52729- 3		1	BL186	M		O					
209-52729- 5		1	BL186	M		O					
209-52730	197 - 69	1	BV149	M		O					
209-52730- 3		1	BV149	M		O					
209-52730- 5		1	BV149	M		O					
209-52730- 7		1	BV149	M		O					
209-52731	197 - 66	1	BL223	M		O					
	198 - 61										
209-52731- 3		1	BL223	M		O					
209-52731- 5		1	BL223	M		O					
209-52731- 7		1	BL223	M		O					
209-52731- 9		1	BL223	M		O					
209-52732	153 - 49	1	BD405	M		O					
	154 - 50										
	197										

PART NUMBER	FIGURE AND INDEX	TOTAL QTY.	MICRO-FILM NUMBER	MAINTENANCE CODE DATA: SOURCE CODE	INST'L CAPABILITY	PRE-INST'L CAPABILITY	RECOVERABILITY	SUPPORT EQUIPMENT	FEDERAL STOCK NUMBER DATA: COGNIZANCE CODE	FEDERAL STOCK NUMBER	MFG. CODE (TSMC)
	198										
209-52732- 3		1	BD405	M		O					
209-52733	197 - 58	1	BL224	M		O					
	198 - 53										
209-52733- 3		1	BL224	M		O					
209-52733- 5		1	BL224	M		O					
209-52733- 7		1	BL224	M		O					
209-52733- 11		1	BL224	M		O					
209-52734	197 - 50	1	DQ214	M		O					
	198 - 45										
209-52734- 3		1	BL225	M		O					
209-52734- 5	197 - 51	2	BL225	M		O					
	198 - 46										
209-52735- 3	197 - 48	1	BH111	M		O					
	198 - 43										
209-52735- 5	197 - 49	1	BH111	M		O					
	198 - 44										
209-52736	197 - 65	1	BD406	M		O					
	198 - 60										
209-52736- 3		1	BD406	M		O					
209-52737	197 - 33	1	BY 92	M		O					
	198 - 28										
209-52738	197 - 79	1	BD407	M		O					
	198 - 85										
209-52739- 1		1	DQ 80						R	1560-571-7145	ANAA
209-52739- 2		1	DQ 80						R	1560-571-7146	ANAA
209-52739- 3		1	DQ 80								
209-52739- 4		1	DQ 80								
209-52740		1		U							
209-52741	198 -173	1		P1	F	O	S		R	1560-511-2306	ANAA
209-52742- 3		1	DJ288	X1							
209-52742- 11	198 -171	1	DJ288	P1	F	O	S		R	1560-511-2312	ANAA
209-52743	198	1		M		O					
209-52743- 3		1		M		O					
209-52743- 5		1		M		O					
209-52743- 11		1		M		O					
209-52743- 21	198 -115	1		M		O					
	198 -176										
209-52743- 51	154 - 51	1		M		O					
	198										
209-52744	198 -153	1		M		O					
209-52744- 3	198	1		M		O					
209-52744- 11	198 -158	1		M		O					
209-52745	198 -154	1		M		O					
209-52745- 3		1		M		O					
209-52746	198 -156	1		M		O					
209-52746- 3		1		M		O					
209-52747	198 -140	1									
209-52747- 3		1		X1							
209-52747- 11		1		X2							
209-52748	198 -130	1		M		O					
209-52748- 3		1		M		O					
209-52749	198 -129	1	DJ290	P1	F	O	S		R	1560-511-2313	ANAA
209-52750	198 -117	1		M		O					
209-52751	198 -122	1		M		O					
209-52752		1	DG242	M		O					
209-52752- 3		1	DG242	M		O					
209-52752- 5		1	DG242	M		O					
209-52752- 7		1	DG242	M		O					
209-52752- 9		1	DG242	M		O					
209-52752- 11		1	DG242	M		O					
209-52753	198 - 64	1		M		O					
209-52753- 3		1		M		O					
209-52753- 5		1		M		O					
209-52753- 7		1		M		O					
209-52753- 11		1		M		O					
209-52754	198 - 73	1		P1	F	O	S		R	1560-570-2297	ANAA
209-52755	198 - 95	2	DH 66	P1					R	1560-564-1488	ANAA
209-52756	198 -101	1		P1	F	O	S		R	1560-569-7249	ANAA
209-52757	198 -106	1							R	1560-571-5498	ANAA
209-52758	198 -183	1	DN 4	P1	F	O	C		R	1560-570-2298	ANAA
209-52759	198 - 87	1		M		O					
209-52759- 3		1		M		O					
209-52760	198 - 94	1		M		O					
209-52760- 3		1		M		O					
209-52761		1		M		O					
209-52762	198 - 88	1									
209-52763	198 -146	1		P1	F	O	C		R	1560-511-2314	ANAA
209-52763- 3	198	1		M		O					
209-52763- 5	198	1		X1							
209-52764	76 - 17	1		M		O					
209-52764 7		1		M		O					
209-52764- 3		1		M		O					
209-52764- 5		1		M		O					
209-52764- 9	76	1		M		O					
209-52764- 11		1		M		O					
209-52764- 21		1		M		O					
209-52764- 31		1		M		O					
209-52764- 41		1		M		O					
209-52764- 51		1		M		O					
209-52765	79 - 19	1	DJ 73	P1	F	O	S		R	1560-570-2299	ANAA
	198 -142										
	202										
209-52766	202 - 11	1		X1							
209-52767	202 - 4	1		X1							
209-52767- 3		1		X1							
209-52768	202 - 6	1		M		O					
209-52769	202 - 7	1		M		O					
209-52770	202 - 10	1		M		O					
209-52771	202 - 9	1		P	F	O	C		R	1560-530-8401	ANAA
209-52772	202 - 8	1		P	F	O	C		R	1560-531-7353	ANAA
209-52773		2		M		O					
209-52774- 1	80 - 39	1		M		O					
209-52774- 2	80	1		M		O					
209-52775	80 - 32	2	DQ 61	P1	F	O	S		R	1560-570-2300	ANAA

PART NUMBER	FIGURE AND INDEX	TOTAL QTY.	MICRO-FILM NUMBER	MAINTENANCE CODE DATA: SOURCE CODE	INST'L CAPABILITY	PRE-INST'L CAPABILITY	RECOVERABILITY	SUPPORT EQUIPMENT	FEDERAL STOCK NUMBER DATA: COGNIZANCE CODE	FEDERAL STOCK NUMBER	MFG. CODE (TSMC)
	81										
209-52776	81 - 6	2		P1	F	O	C		R	1560-531-7352	ANAA
209-52777	81 - 5	2		P	F	O	C		R	1560-531-7355	ANAA
209-52778	81 - 4	2		M		O					
209-52779	81 - 8	2	DJ 74	M		O					
209-52780	81	2		X1							
209-52780- 3	81 - 1	2		X1							
209-52781	81 - 9	2		M		O					
209-52782	81 - 3	2	DJ228	X1							
209-52783- 3	80 - 28	1		X1							
209-52783- 4	80	1		X1							
209-52783- 5		1		X2							
209-52783- 6		1		X2							
209-52783- 11	80	1		P1					R	1560-564-1489	ANAA
209-52783- 12	80	1		P1					R	1560-564-1490	ANAA
209-52784		1		M		O					
209-52786- 1		1	DH 95	P1	F	O	S		R	1560-534-4120	ANAA
209-52786- 2		1	DH 95	P1	F	O	S		R	1560-534-4121	ANAA
209-52786- 3		1	DH 95	X1							
209-52786- 4		1	DH 95	X1							
209-52788		2		M		O					
209-52790		1		M		O					
209-52791		2		M		O					
209-52792		1		M		O					
209-52793- 3		1	DP 38	X1							
209-52793- 4		1	DP 38	X1							
209-52793- 5		1	DP 38	P1	F	O	S		R	1560-570-2301	ANAA
209-52793- 6		1	DP 38	P1	F	O	S		R	1560-570-2302	ANAA
209-52793- 11	80 - 46	1	DP 38						R	1560-610-5148	ANAA
209-52794		2		M		O					
209-52795		1		M		O					
209-52795- 12	80	1									
209-52796- 1		1		P	F	O	C		R	1560-530-8891	ANAA
209-52796- 2		1		P	F	O	C		R	1560-530-8890	ANAA
209-52797- 1		1		P	F	O	C		R	1560-530-8889	ANAA
209-52797- 2		1		P	F	O	C		R	1560-530-8892	ANAA
209-52798- 3		1							R	1560-603-3540	ANAA
209-52798- 4		1							R	1560-603-3541	ANAA
209-53001		1	BX169	U							
209-53009-201		1									
209-53010- 1	56 - 17	1									
209-53010- 2	56 - 16	1									
209-53011	56 - 11	1									
209-53012	56 - 13	1									
209-53013	56 - 12	1									
209-53013- 3	56 - 14	2									
209-53026	95 - 27	1	BV155	M		O					
	57 - 49										
209-53026- 3		1	BV155	M		O					
209-53026- 5		1	BV155	M		O					
209-53026- 7		2	BV155	M		O					
209-53026- 9		1	BV155	M		O					
209-53028		1	DR 95	M		O					
209-53028- 3	55 - 26	1	DR 95	M		O					
209-53031	96 - 26	1	DK101								
209-53046	59A- 51	1									
209-53047		1	BH113	M		O					
209-53049		1	BD408	M		O					
209-53051		1	BD409	M		O					
209-53053	59A- 1	1									
209-53054- 3	59A- 68	1									
209-53055- 3	59A- 69	1									
209-53056	59A- 27	4									
209-53057	59A- 32	1									
209-53063	59A- 62	1									
209-53065- 3	59A- 44	1									
209-53065- 5	59A- 13	1									
209-53066	59A- 5	1									
209-53069- 3	59A- 10	1									
209-53069- 5	59A- 11	1									
209-53070	59A- 37	1									
209-53072	59A- 57	1									
209-53073	59A- 58	1									
209-53074	59A- 56	1									
209-53075	PG. 1012	1	DK171	U							
209-53075- 11	PG. 1012	1	DK171								
209-53077- 3	59A- 39	1									
209-53077- 5	59A- 38	1									
209-53078- 3	59A- 33	1									
209-53078- 5	59A- 40	1									
209-53078- 7	59A- 19	1									
209-53079	59A- 23	1									
209-53080	59A- 18	1									
209-53082	59A	1									
	63 - 40										
209-53083	59A	1									
	63										
209-53084	59A- 4	1									
209-53085	59A- 50	1									
209-53086	59A	1									
209-53090	59A- 63	1									
209-53109- 3		2	DJ229	M		O					
209-53109- 5		1	DJ229	M		O					
209-53109- 7		1	DJ229	M		O					
209-53109- 9		1	DJ229	M		O					
209-53109- 11		1	DJ229	M		O					
209-53109- 13		1	DJ229	M		O					
209-53109- 15		1	DJ229	M		O					
209-53109- 17		1	DJ229	M		O					
209-53109- 19		2	DJ229	M		O					
209-53109- 21		1	DJ229	M		O					
209-53110		2	BU222	M		O					
209-53111	61 -105	1	BY136	M		O					
209-53112	61 - 21	1		M		O					
209-53113	58	1		M		O					

PART NUMBER	FIGURE AND INDEX	TOTAL QTY.	MICRO-FILM NUMBER	MAINTENANCE CODE DATA: SOURCE CODE	INST'L CAPABILITY	PRIM'TY CAPABILITY	RECOVERABILITY	SUPPORT EQUIPMENT	FEDERAL STOCK NUMBER DATA: COGNIZANCE CODE	FEDERAL STOCK NUMBER	MFG. CODE (FSMC)
209-53114	60 - 14	1		M		O					
209-53115	58	1		M		O					
209-53116		4	BL247	M		O					
209-53116- 3		1	BL247	M		O					
209-53117		1	DJ259	M		O					
209-53117- 3		1	DJ259	M		O					
209-53118	58 -166	1	DG190	M		O					
	58 -167										
	63 - 46										
209-53118- 11	58 -166	1	DG190								
	58 -167										
	63 - 47										
209-53120		1		M		O					
209-53120- 3		1		M		O					
209-53123		1		M		O					
209-53124		1		M		O					
209-53124- 3		1		M		O					
209-53124- 5		1		M		O					
209-53124- 7		1		M		O					
209-53124- 8		1		M		O					
209-53124- 9		1		M		O					
209-53125- 1		1		M		O					
209-53125- 2		1		M		O					
209-53125- 3		1		M		O					
209-53125- 4		1		M		O					
209-53125- 5		1		M		O					
209-53125- 6		1		M		O					
209-53125- 7		1		M		O					
209-53125- 9		1		M		O					
209-53126	56 - 18	1	BY 43	A		O					
	58										
	60 - 1										
209-53126- 3	58 - 48	2	BY 43	M		O					
209-53126- 5	58 - 49	2	BY 43	M		O					
209-53126- 11	58	1	BY 43	A		O					
209-53126- 23		1	BY 43	M		O					
209-53126-101	58	1	BY 43	A		O					
209-53127	58	1	CP 29	M		O					
209-53127- 3		1	CP 29	M		O					
209-53127-101	58	1	CP 29								
209-53128- 1	58 - 78	1	BY 42	X2							
209-53128- 2	58 - 79	1	BY 42	X2							
209-53130	58 - 76	1	DM 81	P1	F	O	C		R	1560-323-4166	ANAA
209-53130- 3	58 - 76	1	DM 81	P1	F	O	C		R	1680-511-2348	ANAA
209-53132	58 - 17	1	BY 84	M		O					
209-53133	58 - 91	1	BH117	P1	F	O	S		R	1680-511-2355	ANAA
209-53134	58	1	BH118								
	63 - 41										
209-53134- 11	58	1	BH118	A		F					
	63 - 40										
	63 - 42										
209-53135	58 - 83	1	BY 65	M		O					
209-53136		1	CP 85	M		O					
209-53136- 3		1	CP 85	M		O					
209-53137- 1	58 - 62	1	BY199	X2							
209-53137- 2	58 - 63	1	BY199	X2							
209-53138		1		M		O					
209-53140- 3	58 - 72	2	BP207	X2							
209-53140- 5		1	BP207	X2							
209-53143	58 - 61	1	BH120	X2							
209-53144	58	1	BL274	A		F					
209-53144- 3		1	BL274	M		O					
209-53144- 5		1	BL274	M		O					
209-53144- 7		2	BL274	M		O					
209-53144- 9		1	BL274	M		O					
209-53144- 11		1	BL274	M		O					
209-53144- 13		2	BL274	M		O					
209-53144- 15	58 - 43	2	BL274	M		O					
209-53144- 17	58	1	BL274	M		O					
209-53146	58	1	BL239	M		O					
209-53147- 1	58 - 81	1	BL238	M		O					
209-53147- 2	58 - 82	1	BL238	M		O					
209-53148	58 - 38	1	BY 66	M		O					
209-53148- 3		1	BY 66	M		O					
209-53148- 5		1	BY 66	M		O					
209-53149	58 - 60	1	BH121	M		O					
209-53150	58	1	BV183	M		O					
209-53150- 3		1	BV183	M		O					
209-53150- 5		1	BV183	M		O					
209-53151	58 - 41	1	BL240	P1	F	O	C		R	1680-511-2355	ANAA
209-53151- 3		1	BL240	X1							
209-53151- 5		1	BL240	X1							
209-53151- 6		1	BL240	X1							
209-53151- 7		1	BL240	X1							
209-53151- 9		1	BL240	X1							
209-53152	58 -145	1	BD412	P	F	O	C		R	1680-511-2357	ANAA
209-53153	58 -143	1	BH122	P	F	O	C		R	1680-511-2360	ANAA
209-53153- 3	58 -144	1	BH122	P	F	O	C		R	1680-620-1089	ANAA
209-53156		1		A		O					
209-53156- 3		1		M		O					
209-53157		1	BV140	M		O					
209-53157- 3		1	BV140	M		O					
209-53157- 5		1	BV140	M		O					
209-53157- 7		1	BV140	M		O					
209-53159	58 - 57	1	CA 71	M		O					
209-53160		1	BW 17	M		O					
209-53160- 3		1	BW 17	M		O					
209-53160- 5		1	BW 17	M		O					
209-53160- 7		1	BW 17	M		O					
209-53160- 9		1	BW 17	M		O					
209-53160- 11		1	BW 17	M		O					
209-53160- 13		1	BW 17	M		O					
209-53160- 15		1	BW 17	M		O					
209-53160- 21		1	BW 17	M		O					
209-53162		1	DJ184	M		O					

PART NUMBER	FIGURE AND INDEX	TOTAL QTY.	MICRO-FILM NUMBER	MAINTENANCE CODE DATA: SOURCE CODE	INST'L CAPABILITY	PRIM'TY CAPABILITY	RECOVERABILITY	SUPPORT EQUIPMENT	FEDERAL STOCK NUMBER DATA: COGNIZANCE CODE	FEDERAL STOCK NUMBER	MFG. CODE (FSMC)
209-53164		1	BL242	M		O					
209-53164- 3		1	BL242	M		O					
209-53166- 3		1	BY 31	M		O					
209-53166- 5		1	BY 31	M		O					
209-53166- 7		1	BY 31	M		O					
209-53166- 11		1	BY 31	M		O					
209-53166-101		1	BY 31	M		O					
209-53168		1	BH125	M		O					
209-53169	61 - 13	1	CU 61	M		O					
209-53170		2									
209-53171		1	CA158	M		O					
209-53172		1	CA145	M		O					
209-53175- 3	55 - 25	1	DR 96	M		O					
209-53176- 1	58	1	BY108	M		O					
209-53176- 2	58	1	BY108	M		O					
209-53176- 3	58 - 85	2	BY108	M		O					
209-53177	58 - 5	1	BX127	M		O					
209-53178	58 - 55	1	BY281	M		O					
209-53179	58 -111	1		X2							
209-53180	58	1	BX128	M		O					
209-53180- 3	58 - 71	1	BX128	M		O					
209-53181		1		M		O					
209-53181- 3		1		M		O					
209-53181- 5		1		M		O					
209-53181- 6		1		M		O					
209-53181- 7		1		M		O					
209-53182	58 -107	1	BX264	M		O					
209-53183	58 - 20	1	BX213	M		O					
209-53184	58 - 23	1		M		O					
209-53185	58 - 32	1	CA134	X2							
209-53186	58 - 16	1	CA135	P1	F	O	C		R	1680-522-8882	ANAA
209-53187	58 - 73	1	BX271	M		O					
209-53187- 3		1	BX271	M		O					
209-53188	58 -129	1	DJ186	X2							
209-53189	62	1	DG191								
209-53189- 3	62 - 11	2	DG191								
209-53190	58 -132	2									
209-53191	58 -123	1		M		O					
209-53192	58 -116	1	BY274	M		O					
209-53193	58 - 4	1		P1	F	O			R	1680-510-1148	ANAA
209-53194	58 - 9	1	BX140	M		O					
209-53195	58 - 6	1		X2							
209-53196	58 -127	1		P1	F	O	S		R	1650-510-1149	ANAA
209-53197	58 - 21	1		M		O					
209-53198	58 - 98	1		P1	F	O	C		R	1560-514-0185	ANAA
209-53199	58 -119	1	CA 59	P	F	O	C		R	1680-570-2305	ANAA
209-53200		1	DR 77	M		O					
209-53200- 3	56 - 72	1	DR 77	M		O					
209-53209		1	CC 89								
209-53209- 5	55 - 9	1	CC 89	M		O					
	57 - 9										
	57A- 9										
209-53209- 7		1	CC 89	M		O					
209-53209- 11	55 - 9	1	CC 89								
	57 - 9										
	57A										
209-53210	57 - 47	1	DQ188	M		O					
209-53211	57 - 45	1	DQ 33								
209-53211S		1	BW 52	U							
209-53216	PG. 1003	4									
209-53216- 3	PG. 1003	4		M		O					
209-53216- 5	PG. 1003	4		M		O					
209-53217	PG. 1003	6	BH127	M		O					
209-53212	57 - 44	1	DQ 34	M		O					
209-53213	57 - 39	1	DP277								
209-53213- 3	57 - 48	1	DP277	M		O					
209-53214	57 - 38	1	DS 77	M		O					
209-53215	57 - 36	1	DQ105	M		O					
209-53216	57 - 26	1	DS 99	M		F					
209-53217	57 - 46	1	DQ 6								
209-53218	57 - 35	2		M		O					
209-53232		1									
209-53276		1	BD415	M		O					
209-53288	59 - 14	1	BH128	M		O					
209-53288- 3		1	BH128	M		O					
209-53288- 5		1	BH128	M		O					
209-53292	58	1	BX 82	M		O					
	63 - 39										
209-53292- 3	58 -156	2	BX 82	M		O					
209-53293	58 -159	1	BL248	X2							
209-53294	58 -153	1	BD416	M		O					
209-53295	58 -158	1	BH129	M		O					
209-53295- 3		1	BH129	M		O					
209-53295- 5		1	BH129	M		O					
209-53301		1	BW 30	U							
209-53303		1	BN131	U							
209-53305		1	BN196	U							
209-53306		1	BW 23	A		F					
209-53313	351 - 75	1	BL249	M		O					
209-53313- 3		1	BL249	M		O					
209-53313- 5		1	BL249	M		O					
209-53314	351 - 73	1	DL 19	M		O					
209-53314- 3		1	DL 19	M		O					
209-53314- 5		1	DL 19	M		O					
209-53314- 7		1	DL 19	M		O					
209-53314- 9		1	DL 19	M		O					
209-53314- 11	351	1	DL 19	M		O					
209-53322	351 - 12	1	BL250	M		O					
209-53322- 3		1	BL250	M		O					
209-53326	351 - 13	1	BW 29	A		O					
209-53326- 3		1	BW 29	M		O					
209-53327		1	BH136	M		O					
209-53327- 7		1	BH134	M		O					
209-53327- 9		1	BH134	M		O					
209-53328	351 - 11	2	BH135	M		O					

PART NUMBER	FIGURE AND INDEX	TOTAL QTY.	MICRO-FILM NUMBER	MAINTENANCE CODE DATA: SOURCE CODE	INST'L CAPABILITY	PRE-INST'L CAPABILITY	RECOVERABILITY	SUPPORT EQUIPMENT	FEDERAL STOCK NUMBER DATA: COGNIZANCE CODE	FEDERAL STOCK NUMBER	MFG. CODE (TSMC)
209-53328- 3		1	BH135	M		O					
209-53328- 5		1	BH135	M		O					
209-53350	93 - 66	1									
209-53353	350 - 19	1	BL291	M		O					
209-53353- 3		1	BL291	M		O					
209-53353- 5		1	BL291	M		O					
209-53353- 7		1	BL291	M		O					
209-53353- 9		1	BL291	M		O					
209-53364	351 - 34	1	BL292	M		O					
209-53364- 3		1	BL292	M		O					
209-53364- 5		1	BL292	M		O					
209-53364- 7		1	BL292	M		O					
209-53365	351 - 36	1	BW 33	M		O					
209-53365- 3		1	BW 33	M		O					
209-53365- 5		1	BW 33	M		O					
209-53365- 7		1	BW 33	M		O					
209-53365- 9		1	BW 33	M		O					
209-53366		1	BD417	M		O					
209-53368	351 - 38	1	BX 22								
209-53368- 1		1	BX 22	M		O					
209-53368- 3		2	BX 22	M		O					
209-53368- 5		1	BX 22	M		O					
209-53368- 7		1	BX 22	M		O					
209-53368- 9		1	BX 22	M		O					
209-53369	351 - 37	1	BL293	M		O					
209-53369- 3		1	BL293	M		O					
209-53369- 5		1	BL293	M		O					
209-53369- 7		1	BL293	M		O					
209-53369- 9		1	BL293	M		O					
209-53375	351 - 18	1	BW 31	M		O					
209-53375- 3		1	BW 31	M		O					
209-53375- 5		1	BW 31	M		O					
209-53375- 7		1	BW 31	M		O					
209-53375- 9		1	BW 31	M		O					
209-53375- 11		1	BW 31	M		O					
209-53375- 21		1	BW 31	M		O					
209-53376	351 - 19	1	BV298	M		O					
209-53376- 3		1	BV298	M		O					
209-53376- 5		1	BV298	M		O					
209-53376- 7		1	BV298	M		O					
209-53376- 9		1	BV298	M		O					
209-53376- 11		1	BV298	M		O					
209-53376- 13		1	BV298	M		O					
209-53377	351	1	BW 8	M		O					
209-53377- 3		1	BW 8	M		O					
209-53377- 5		1	BW 8	M		O					
209-53377- 7		1	BW 8	M		O					
209-53377- 9		1	BW 8	M		O					
209-53377- 11		1	BW 8	M		O					
209-53377-101	351	1									
209-53378	350 - 93	1	BH136	M		O					
209-53383	350 - 38	1	BL294	M		O					
209-53384	350 - 39	1	BH137	M		O					
209-53385	350 - 36	1	BV295	M		O					
209-53385- 3		1	BV295	M		O					
209-53391	350 - 56	1	CE 49	XZ							
209-53395	350 - 31	1	BL296	M		O					
209-53395- 3		1	BL296	M		O					
209-53395- 5		1	BL296	M		O					
209-53396	350 - 33	1	BH138	M		O					
209-53396- 3		1	BH138	M		O					
209-53396- 5		1	BH138	M		O					
209-53397	350 - 34	1	BW 21	M		O					
209-53397- 3		1	BW 21	M		O					
209-53397- 5		1	BW 21	M		O					
209-53397- 7		1	BW 21	M		O					
209-53398	350 - 35	1	BP238	M		O					
209-53398- 3		1	BP238	M		O					
209-53398- 5		1	BP238	M		O					
209-53399		1	CA 60	M		O					
209-53399- 3		1	CA 60	M		O					
209-53399- 5		1	CA 60	M		O					
209-53401	350 - 41	1	BH139	M		O					
209-53402		1	BH140	M		O					
209-53403	350	1	BH141	P1	F	O	C		R	5330-031-5146	ANAA
209-53404		1	BH142	M		O					
209-53405	350 - 42	1	BL298	M		O					
209-53405- 3		1	BL298	M		O					
209-53405- 5		2	BL298	M		O					
209-53405- 7		1	BL298	M		O					
209-53405- 9		1	BL298	M		O					
209-53405- 11		1	BL298	M		O					
209-53406	350 - 48	1	BL299	M		O					
209-53406- 3		1	BL299	M		O					
209-53406- 5		1	BL299	M		O					
209-53406- 7		2	BL299	M		O					
209-53406- 9		1	BL299	M		O					
209-53406- 11		1	BL299	M		O					
209-53406- 13		1	BL299	M		O					
209-53407	350 - 40	1	BW 42	M		O					
209-53407- 3		1	BW 42	M		O					
209-53407- 9		1	BW 42	M		O					
209-53412- 1	350 - 51	1	BL300	M		O					
209-53412- 2	350 - 52	1	BL300	M		O					
209-53412- 3		2	BL300	M		O					
209-53412- 5		1	BL300	M		O					
209-53412- 6		1	BL300	M		O					
209-53412- 7		1	BL300	M		O					
209-53412- 8		1	BL300	M		O					
209-53412- 9		1	BL300	M		O					
209-53412- 10		1	BL300	M		O					
209-53413	350 - 47	1	DJ 40	M		O					
209-53414	351 - 88	1	BH143	M		O					
209-53415		1	BH144	M		O					
209-534173	189 -109	1									

PART NUMBER	FIGURE AND INDEX	TOTAL QTY.	MICRO-FILM NUMBER	MAINTENANCE CODE DATA: SOURCE CODE	INST'L CAPABILITY	PRE-INST'L CAPABILITY	RECOVERABILITY	SUPPORT EQUIPMENT	FEDERAL STOCK NUMBER DATA: COGNIZANCE CODE	FEDERAL STOCK NUMBER	MFG. CODE (TSMC)
209-53419		1	BD418	M		O					
209-53451	350 - 95	1	BD419	M		O					
209-53452	350	1		M		O					
209-53462	350 - 94	1	BW 7	M		O					
209-53462- 3		1	BW 7	M		O					
209-53462- 5		1	BW 7	M		O					
209-53473	350 - 79	1	CA182								
209-53473- 3		1	CA182	M		O					
209-53473- 5		1	CA182	M		O					
209-53473- 7		1	CA182	M		O					
209-53473- 9		1	CA182	M		O					
209-53473- 11		1	CA182	M		O					
209-53473- 13		2	CA182	M		O					
209-53473- 17		1	CA182	M		O					
209-53483		1	BL302	M		O					
209-53483- 3		1	BL302	M		O					
209-53483- 5		1	BL302	M		O					
209-53483- 7		1	BL302	M		O					
209-53486	351	1	BD420	M		O					
209-53503- 1	351 - 50	1	AL 48	M		O					
209-53503- 2	351 - 45	1	AL 48	M		O					
209-53503- 3		2	AL 48	M		O					
209-53503- 4		2	AL 48	M		O					
209-53503- 5		2	AL 48	M		O					
209-53503- 7		1	AL 48	M		O					
209-53503- 11		1	AL 48	M		O					
209-53506- 1	351 - 47	1	BL303	M		O					
209-53506- 2	351 - 40	1	BL303	M		O					
209-53506- 3		2	BL303	M		O					
209-53506- 5		2	BL303								
209-53508	351 - 42	1	BV146	M		O					
209-53512	351 - 48	1	BW 15	M		O					
209-53556- 1	36 - 10	1	BS 87	P1	F	O	S		R	1560-569-8606	ANAA
209-53556- 2	36	1	BS 87	P1	F	O	S		R	1560-569-8671	ANAA
209-53726- 3	155 - 32	1									
209-54001		1	BL304	U							
209-54002		1		U							
209-54008		1		M		F					
209-540101		1									
209-540101- 1	357	1		U							
209-540101- 2	357	1		U							
209-540102		1		U							
209-540103		1		U							
209-540104		1		U							
209-540105		1		M		O					
209-540106		1		M		O					
209-540107		1		M		O					
209-540107- 3		1		M		O					
209-540108		1	DH147	M		O					
209-540108- 3		1	DH147	M		O					
209-540108- 5		1	DH147	M		O					
209-540109	304 - 1	1		M		O					
209-540109- 3		1		M		O					
209-540109- 5		1		M		O					
209-540109- 7		1		M		O					
209-540109- 9		1		M		O					
209-540109- 11	304	1		M		O					
209-540109- 13		1		M		O					
209-540109- 15		1		M		O					
209-540109- 17		1		M		O					
209-540109- 19		1		M		O					
209-540109- 21	304	1		M		O					
209-540109- 31	304	1		M		O					
209-540109- 41	304	1		M		O					
209-54011	209	1	BL 3	M		O					
	210										
	211 - 14										
	216 - 10										
	217										
	220										
	221 - 3										
	229										
	230 - 13										
	235 - 55										
	236										
	237										
	249										
	250										
	257										
	259										
	268 - 2										
	275										
	276 - 3										
	277										
	278										
	279										
	286										
	290										
	292										
	294 - 2										
	268								R	EMOVE	
209-540110- 11	304	1									
209-540110- 21	304	1		M		O					
209-540110- 31	268	1		M		O					
	304	1									
209-540110- 41	268	1		M		O					
	304										
209-540111		1		M		O					
209-540112		1	DH228	M		O					
209-540112- 3		1	DH228	M		O					
209-540113		1		M		O					
209-540113- 3		1		M		O					
209-540114		4	DG192	M		O					
209-540116		4	DG193	M		O					
209-540118		4	DH124	M		O					

PART NUMBER	FIGURE AND INDEX	TOTAL QTY.	MICRO-FILM NUMBER	MAINTENANCE CODE DATA: SOURCE CODE	INSTL CAPABILITY	PRE-INSTL CAPABILITY	RECOVERABILITY	SUPPORT EQUIPMENT	FEDERAL STOCK NUMBER DATA: COGNIZANCE CODE	FEDERAL STOCK NUMBER	MFG. CODE (TSMC)
209-54012		1	CN 98	M		O					
209-540121		1							R	1560-571-7147	ANAA
209-540122		2		M		O					
209-540123- 3		1		M		O					
209-540123- 5		1		M		O					
209-540123- 7		1		M		O					
209-540123- 9		1		M		O					
209-540124		1		M		O					
209-540125		2		M		O					
209-540126		1	DG244								
209-540127		1		M		O					
209-540127- 9		1		M		O					
209-540129	227 - 26	1	DM147	M		O					
209-540129- 3		1	DM147	M		O					
209-540129- 5		1	DM147	M		O					
209-54013- 1	357	1	BV173	U							
209-54013- 2	357	1	BV173	U							
209-540130	285 - 87	1	DN 87								
209-540131- 1	17 - 58	1		M		O					
209-540131- 2	17	1		M		O					
209-540131- 3		1		M		O					
209-540131- 4		1		M		O					
209-540132		1		M		O					
209-540133		1		M		O					
209-540133- 3		1		M		O					
209-540133- 5		2		M		O					
209-540133- 11		1		M		O					
209-540133- 13		1		M		O					
209-540134		2		M		O					
209-540135		1		M		F					
209-540136		1							R	1560-571-7146	ANAA
209-540137	101 - 35	1	DH 97	M		O					
	103 -166										
209-540138	292	1	DN145	M		O					
209-540139		1	DN171								
209-54014	53 - 22	1	DH166	M		O					
	230										
	286 - 20										
	287										
	286 - 20	1							R	1680-610-5156	B210
	335 - 71	1									
209-540140- 21	287	1									
	335	1									
209-540141	287 - 50	1	DP 33								
209-540141- 7	287 - 52	1	DP 33								
209-540141- 13	287 - 61	1	DP 33								
209-540141- 15	287 - 60	1	DP 33								
209-540141- 17	287 - 59	1	DP 33								
209-540141- 31	287 - 55	1	DP 33								
209-540141- 41	287	1									
209-540142	287 - 63	1	DH179								
209-540143	287 - 42	1	DH125						R	6150-609-4312	B210
209-540144	287 - 40	1	DH126						R	6150-609-4313	B210
209-540145		1	DH127						R	6150-609-4314	B210
209-540146		3	DH128								
209-540146- 3	284 - 47	3									
	285 - 24										
	285 - 70										
209-540146- 5	284 - 52	1									
	285 - 75										
	285A- 75										
	287 - 39										
	287A- 11										
209-540147		1	DH148								
209-540147- 3	287 - 16	1	DH148								
	287A- 12										
209-540147- 5	287 - 17	1	DH148								
209-540147- 7	287 - 18	1	DH148								
	287A- 14										
209-540147- 9	285 - 89	1	DH148								
	285A- 62										
	287 - 20										
	287A- 15										
209-540147- 13	285 - 60	1	DH148								
	285A- 57										
	287 - 19										
	287A- 17										
209-540147- 15	285A- 29	1									
209-540148		1	DO260								
209-540148- 3	335 - 23	1									
209-540149		1	DH149								
209-54015		1	CN 75	U							
209-54015- 1	357	1	CN 75	U							
209-54015- 2	357	1	CN 75	U							
209-540150		1	DH129								
209-540151- 1		1		M		O					
209-540151- 3		1		M		O					
209-540151- 5		1		M		O					
209-540151- 7		1		M		O					
209-540151- 11		1		M		O					
209-540151- 21		1		M		O					
209-540152		1									
209-540152- 21	348 - 30	1									
209-540152- 31	269 - 27	1									
	269 - 42	1									
209-540152- 41	269	1									
209-540153- 11	344 - 9	1		M		O					
	345 - 9										
209-540153- 21	346 - 6	1		M		O					
209-540155- 3		2		M		O					
209-540155- 5		2		M		O					
209-540156- 3				M		O					
209-540156- 5				M		O					
209-540156- 7				M		O					
209-540162		2		M		O					

PART NUMBER	FIGURE AND INDEX	TOTAL QTY.	MICRO-FILM NUMBER	MAINTENANCE CODE DATA: SOURCE CODE	INSTL CAPABILITY	PRE-INSTL CAPABILITY	RECOVERABILITY	SUPPORT EQUIPMENT	FEDERAL STOCK NUMBER DATA: COGNIZANCE CODE	FEDERAL STOCK NUMBER	MFG. CODE (TSMC)
209-540162- 7		4		M		O					
209-540165- 11	311	1									
209-540165		1		M		F					
209-540166		1		M		O					
209-540167				M		O					
209-540168				M		O					
209-540169				M		O					
209-54017		1	BL307	M		O					
209-540171	251	1									
	311										
209-540172	251 - 12	1									
	311										
209-540173	304	1									
209-54022		1	BD422	M		O					
209-54024- 3		1	BL308	M		O					
209-54024- 4		1	BL308	M		O					
209-54024- 12		1	BL308	M		O					
209-54026	122	1	CV118								
	208 - 17										
	209										
	212										
	213 - 17										
	213 - 45										
	215										
	216										
	224 - 18										
	231 - 5										
	233 - 1										
	234 - 59										
	235 - 58										
	241										
	242 - 1										
	245										
	247 - 3										
	253 - 3										
	257										
	258 - 1										
	260										
	262										
	270										
	272										
	275										
	277										
	279 - 22										
	283										
	286	1									
	288 - 1										
	290										
	291										
	207 - 17										
209-54026- 11	305	1	CV118	M		O					
209-54026- 21	305	1	CV118	M		O					
209-54026- 31	305	1	CV118	M			O				
209-54026- 41	305	1	CV118	M		O					
209-54026- 51	306	1	CV118	M		O					
209-54026- 61	306	1	CV118	M		O					
209-54027	305 - 1	1	CV122	M		O					
209-54027- 3		1	CV122	M		O					
209-54027- 5		1	CV122	M		O					
209-54027- 7		1	CV122	M		O					
209-54027- 9		1	CV122	M		O					
209-54027- 11	305	1	CV122	M		O					
209-54027- 13		1	CV122	M		O					
209-54027- 21	305	1	CV122	M		O					
209-54027- 31	306 - 1	1	CV122	M		O					
209-54027- 41	306 - 2	1	CV122	M		O					
209-54028	305 - 4	4	DN120	M		O					
	306 - 6										
209-54028- 3		1	CC 82	M		O					
209-54028- 5		1	CC 82	M		O					
209-54028- 11	306 - 7	1	CC82M		D						
209-54029	243	1	BP266	A		F					
209-54030	243 - 9	1	CM192	M		O					
	244 - 7										
209-54030- 3		1	CM192	M		O					
209-54032	358 - 3	1	DR145	U							
209-54033	300 - 1	1	DG136	M		O					
209-54033- 3		1	DG136	M		O					
209-54033- 5		1	DG136	M		O					
209-54033- 7		1	DG136	M		O					
209-54033- 9		1	DG136	M		O					
209-54033- 11	300	1	DG136	M		O					
209-54033- 13		1	DG136	M		O					
209-54033- 15		1	DG136	M		O					
209-54033- 21	300	1	DG136	M		O					
209-54033- 31	300	1	DG136	M		O					
209-54033- 41	301 - 1	1	DG136	M		O					
209-54033- 51	301	1	DG136								
209-54034	300 - 8	1	CV124	A		F					
209-54034- 5	300	1	CV124	P1	F	O	C		R	1560-570-2307	ANAA
209-54034- 3	300	1	CV124	P1	F	O	C		R	1560-570-2306	ANAA
209-54034- 7		1	CV124	P1	F	O	C		R	1560-570-2308	ANAA
209-54034- 11	300	1	CV124	A		F					
209-54034- 21	301 - 5	1	CV 12	4A			F				
209-54036	302	1	CV129	M		O					
209-54036- 3	302 - 1	1	CV129	M		O					
209-54036- 7	302 - 2	1	CV129	M		O					
209-54036- 9	302 - 3	1	CV129	M		O					
209-54036- 11	302	1	CV129	M		O					
209-54036- 13	302	1	CV129	M		O					
209-54036- 15	302 - 4	1	CV129	M		O					
209-54036- 31	302	1	CV129	M		O					
209-54038	208 - 19										
	231 - 10										
	232										

PART NUMBER	FIGURE AND INDEX	TOTAL QTY.	MICRO-FILM NUMBER	MAINTENANCE CODE DATA: SOURCE CODE	INSTL CAPABILITY	PRE-INSTL CAPABILITY	RECOVERABILITY	SUPPORT EQUIPMENT	COGNIZANCE CODE	FEDERAL STOCK NUMBER DATA: FEDERAL STOCK NUMBER	MFG. CODE (TSMC)
	233 - 5										
	296										
	207 - 13	1	BV105	A		F					
209-54039	296 - 1	1	BL309	M		O					
209-54039- 3	296	1	BL309	M		O					
209-54040	296 - 3	1	BX 27	M		O					
	335 - 23										
209-54040- 3		1	BX 27	M		O					
209-54042	300 - 43	1	BH146	M		O					
209-54044	300 - 10	1	BH147	M		O					
	301 - 7										
209-54045	243 - 8	1	DR209	P1	F	O	C		R	5930-031-5147	ANAA
209-54047	243 - 3	1	DR220	P1	F	O	C		R	5930-031-5148	ANAA
209-54047- 3		1	DR220	X1							
209-54048	300 - 9	1	BH149	M		O					
209-54049	355 - 93	1	DN267	A		F					
	355 - 94										
	PG. 1019										
	PG. 1026										
209-54049- 5		2	DN267	M		O					
209-54049- 11	355 - 93	1	DN267	A		F					
	355 - 94										
	PG. 1019										
	PG. 1026										
209-54050		1	DN275								
209-54050- 1	355	1	DN275	P	F	O	C		R	1560-338-1024	ANAA
	PG. 1019										
209-54050- 3	355	1	DN275	P	F	O	C		R	1560-338-1025	ANAA
	PG. 1019										
209-54050- 5	355	2	DN275						R	1560-610-3406	ANAA
	PG. 1019										
209-54050- 7	355	1	DN275						R	1560-610-3407	ANAA
	PG. 1019										
209-54050- 11	355	1	DN275								
	PG. 1019										
	PG. 1026										
209-54051		1	BV185	M		O					
209-54051- 3		1	BV185	M		O					
209-54052		4	CU 80	M		O					
209-54053	295 - 15	1	CV 66	A		F					
209-54053- 3		1	CV 66	N		O					
209-54055	234	1	BL314	P	F	O	C		R	1560-570-2309	ANAA
	235										
	238										
209-54055- 3	234 - 81	1	BL314	X1							
	235 - 80										
	238 - 19										
209-54056	234	1	BL315	A		F					
	235										
	238										
	256										
209-54057- 1		2	BH150	M		O					
209-54057- 2		2	BH150	M		O					
209-54060	357	14	BV235	M		O					
209-54060- 3		14	BV235	M		O					
209-54061- 1		1	BH151	M		O					
209-54061- 2		1	BH151	M		O					
209-54063	355 - 95	1	BL316	P1	F	O	C		R	1560-569-9058	ANAA
	PG. 1019										
	PG. 1026										
209-54063- 3		1	BL316	X1							
209-54064		1	BL317	M		O					
209-54067	251 - 11	2	BX177								
209-54067- 1	311	1	BX177	A		F					
209-54067- 2	311	1	BX177	A		F					
209-54067-101	311	1	BX177	A		F					
209-54067-102	311	1	BX177	A		F					
209-54068- 1	311 - 4	1	BX182	M		O					
209-54068- 2	311 - 5	1	BX182	M		O					
209-54068- 3	311	1	BX182	M		O					
209-54068- 4	311	1	BX182	M		O					
209-54068- 5	311	1	BX182	M		O					
209-54068- 6	311	1	BX182	M		O					
209-54068-101	311 - 6	1	BX182	M		O					
209-54068-102	311 - 7	1	BX182	M		O					
209-54069	311 - 21	2	BL319	M		O					
209-54069- 3	311	2	BL319	M		O					
209-54069- 5	311	2	BL319	M		O					
209-54069- 7		1	BL319	M		O					
209-54069- 9		1	BL319	M		O					
209-54069- 11	311 - 40	2	BL319	M		O					
	312 - 8										
209-54070		2	BH152	M		O					
209-54070- 3		2	BH152	M		O					
209-54071		1	BD424	M		F					
209-54072	297 - 16	1	BL320	M		F					
	298 - 18										
209-54072- 3		1	BL320	M		F					
209-54072- 5		4	BL320	M		F					
209-54072- 7		1	BL320	M		F					
209-54073	297 - 14	1	BL321	M		F					
	298 - 20										
209-54073- 3		1	BL321	M		F					
209-54073- 5		4	BL321	M		F					
209-54073- 7		1	BL321	M		F					
209-54075		1		X1							
209-54075- 3		1		X1							
209-54076	295 - 22	1	AS169	M		O					
209-54076- 3		1	AS169	M		O					
209-54076- 5		1	AS169	M		O					
209-54080	297 - 15	1	BV 93	M		F					
209-54081- 1		1	DG 22	M		O					
209-54081- 2		1	DG 22	M		O					
209-54082- 1	17 - 60	1	BV 96	P	F	O	C		R	1560-532-0168	ANAA
209-54082- 2	17	1	BV 96	P	F	O	C		R	1560-532-0167	ANAA
209-54082- 3		1	BV 96	M		O					
209-54082- 4		1	BV 96	M		O					
209-54083		2	BD425	M		O					
209-54085		1	BD426	M		O					
209-54086		1	BW178	M		O					
209-54087		1	BV102	M		O					
209-54088- 1		1	CP 59	M		O					
209-54088- 2		1	CP 59	M		O					
209-54089		2	DG 23	M		O					
209-54090		1	BW165	M		O					
209-54090- 3		1	BW165	M		O					
209-54090- 5		1	BW165	M		O					
209-54091	234 - 7	1	CE 36	M		O					
	235 - 7										
209-54091- 3		1	CE 36	M		O					
209-54091- 5		4	CE 36	M		O					
209-54091- 7		1	CE 36	M		O					
209-54092	234 - 4	1	DG 57	M		O					
	235 - 4										
	279 - 4										
209-54093		1	BX141	M		O					
209-54095	234 - 2	1	BL324	M		O					
	235 - 2										
	279 - 2										
209-54095- 3		1	BL324	M		O					
209-54097	279 - 6	1	CE 32	M		O					
209-54097- 3		1	CE 32	M		O					
209-54097- 5		4	CE 32	M		O					
209-54097- 7		1	CE 32	M		O					
209-54100	234 - 42	1	BH155	M		O					
209-54100- 3		1	BH155	M		O					
209-54100- 5		1	BH155	M		O					
209-54101	218	1	BW 26	M		O					
	221										
	224										
	231										
	232 - 3										
	246 - 8										
	259										
	275										
	277										
	281 - 7										
	282 - 2										
	286 - 16										
	291										
	292										
	293										
	294 - 15										
	299 - 1										
209-54102	299 - 4	1	BX 1	M		O					
209-54102- 3		1	BX 1	M		O					
209-54102- 5		1	BX 1	M		O					
209-54103		1	BD428	M		O					
209-54104	222 - 7	1	BL326	M		O					
209-54105		1	BL327	M		O					
209-54105- 3		1	BL327	M		O					
209-54106	218	1	DG 64	M		O					
	224										
	246 - 4										
	249 - 4										
	250										
	251										
	254										
	277										
	286										
	299 - 12										
209-54106- 11	299	1	DG 46	M		O					
209-54106- 21	299	1	DG 46	M		O					
209-54106- 31	299	1	DG 46	M		O					
209-54107	299 - 15	1	DG 63								
209-54107- 3		1	DG 63	M		O					
209-54107- 11	299 - 16	1	DG 63	M		O					
209-54107- 21	299 - 17	1	DG 63	M		O					
209-54107- 31	299 - 18	1	DG 63	M		O					
209-54108	296 - 25	1	BH156	M		O					
209-54109	215 - 6	1	CV 65	M		O					
	216										
	230										
	234 - 54										
	235 - 53										
	254										
	296										
209-54109- 11	296	1	CV 65	M		O					
209-54111		1	CA 12	U							
209-54112		1	CL347	M		O					
209-54112- 11		1	CL347	M		O					
209-54115	224										
	229										
	230										
	233 - 4										
	234 - 61										
	243 - 1										
	246										
	249 - 3										
	250 - 4										
	251										
	260										
	261										
	262										
	265										
	270 - 1										
	271 - 1										
	273 - 2										
	278										
	279 - 21										

PART NUMBER	FIGURE AND INDEX	TOTAL QTY.	MICRO-FILM NUMBER	MAINTENANCE CODE DATA: SOURCE CODE	INSTL CAPABILITY	PRE-INSTL CAPABILITY	RECOVERABILITY	SUPPORT EQUIPMENT	FEDERAL STOCK NUMBER DATA: COGNIZANCE CODE	FEDERAL STOCK NUMBER	MFG. CODE (TSMC)
	280 - 1										
	281										
	282 - 1										
	292										
	294 - 19										
	207 - 11	1	CV108								
	208 - 11										
209-54115- 11		1	CV108								
209-54115- 13	300	1	CV108	A		O					
209-54115- 15	300	1	CV108	A		O					
209-54115- 17	300	1	CV108	A		O					
209-54115- 19	300	1	CV108	A		O					
209-54115- 21	301	1	CV108	A		O					
209-54115- 31	301	1	CV108	M		O					
209-54116	242 - 10	1	BL331	M		O					
209-54117	242 - 11	1	BV 97	M		O					
209-54117- 3		1	BV 97	M		O					
209-54117- 11	242 - 11	1	BV 97	M		O					
209-54119	232 - 7	1	CN 84	M		F					
209-54121- 1		1	BL332	M		O					
209-54121- 2		1	BL332	M		O					
209-54123- 11		1	BL333	M		O					
209-54124- 7		1	BD430	M		O					
209-54124- 9		1	BD430	M		O					
209-54124- 11		1	BD430	M		O					
209-54125		1	BG 20	M		O					
209-54125- 5		1	BG 20	M		O					
209-54126		1	BL335	M		O					
209-54126- 11		1	BL335	M		O					
209-54127		1	BV182	M		O					
209-54127- 12		1	BV182	M		O					
209-54128- 1	311 - 8	1	BL336	M		O					
209-54128- 2	311 - 9	1	BL336	M		O					
209-54129	234 - 38	2		M		O					
	235 - 38										
209-54131		2	CU 48	M		O					
209-54133		2	BS110	M		O					
209-54134	307 - 3	1	DM155	M		O					
209-54134- 3		1	BV181	M		O					
209-54134- 5		1	BV181	M		O					
209-54134- 10	307 - 4	1	BV181	M		O					
209-54135	213	1	DS 78	M		F					
	261										
	307										
209-54135- 10	307	1	DS 78	M		F					
209-54138	226	1	CV112	M		O					
	230										
	234 - 48										
	235 - 47										
	279										
	297										
209-54138- 11	296	1	CV112	M		O					
209-54139	297 - 30	1	CV106	M		O					
209-54139- 5		1	CV106	M		O					
209-54139- 7		1	CV106	M		O					
209-54139- 21	298 - 37	1	CV106	M		O					
209-54140		12	BH157	M		O					
209-54142		1	BV117	M		O					
209-54142- 3		1	BV117	M		O					
209-54143		1	BH158	M		O					
209-54144	39 - 43	1	BL338	M		O					
209-54145	39	1	BL339								
	287 - 41										
209-54146		10	DG163	M		F					
209-54146- 11		2	DG163	M		F					
209-54147	228 - 20	1		M		O					
	264 - 3	1									
209-54147- 11		1		M		O					
209-54148	228 - 23	1	BG 14	M		O					
209-54149		1	BW141	M		O					
209-54149- 3		1	BW141	M		O					
209-54149- 5		1	BW141	M		O					
209-54150		1	BP190	M		O					
209-54152- 11	340 - 31	1									
209-54156		1	BF448	M		O					
209-54156- 3		1	BF448	M		O					
209-54157- 1		1	BH160	M		F					
209-54157- 2		1	BH160	M		F					
209-54160- 5		1	CA258	M		O					
209-54160- 9		1	CA258	M		O					
209-54160- 11		1	CA258	M		O					
209-54160- 13		1	CA258	M		O					
209-54160- 15		1	CA258	M		O					
209-54160- 17		1	CA258	M		O					
209-54160- 19		1	CA258	M		O					
209-54160- 21		1	CA258	M		O					
209-54160- 23		1	CA258	M		O					
209-54160- 31		1	CA258	M		O					
209-54160-101	308 - 10	1	CA258	M		O					
	309 - 9										
209-54160-201	308	1	CA258	M		O					
209-54160-401	309	1	CA258	M		O					
209-54161	218	1	CA255								
	222 - 6										
	229 - 16										
	230										
	236 - 5										
	241 - 3										
	246 - 3										
	247 - 91										
	249 - 5										
	250 - 7										
	259										
	270										
	271 - 16										

PART NUMBER	FIGURE AND INDEX	TOTAL QTY.	MICRO-FILM NUMBER	MAINTENANCE CODE DATA: SOURCE CODE	INSTL CAPABILITY	PRE-INSTL CAPABILITY	RECOVERABILITY	SUPPORT EQUIPMENT	FEDERAL STOCK NUMBER DATA: COGNIZANCE CODE	FEDERAL STOCK NUMBER	MFG. CODE (TSMC)
209-54161- 11		1	CA255	A		F					
209-54161- 21	308	1	CA255	A		F					
209-54161- 31	308	1	CA255	A		F					
209-54161- 41	308	1	CA255	A		F					
209-54161- 61	308	1	CA255	M		O					
209-54162- 3	308 - 1	1	DG117	M		O					
209-54162- 5	308	1	DG117	M		O					
209-54162- 7	308	1	DG117	M		O					
209-54162- 13	309	1	DG117	M		O					
209-54163	222 - 5	1	DG133	A		F					
	234 - 37										
	235 - 56										
	261										
	293 - 3										
	308										
209-54163- 11	308	1	DG133	A		F					
209-54163- 13		1	DG133								
209-54163- 21	308	1	DG133	A		F					
209-54163- 31	309	1	DG133								
209-54163- 41	309	1	DG133	M		O					
209-54163- 51		1	DG133								
209-54166		4	BH161	M		O					
209-54166- 3		1	BH161	M		O					
209-54167		1	BD432	M		O					
209-54168		1	CV 82	M		O					
209-54169	309 - 1	1	CM316	M		O					
209-54169- 3		1	CM316	M		O					
209-54169- 5		1	CM316	M		O					
209-54169- 7		1	CM316	M		O					
209-54169- 9		1	CM316	M		O					
209-54169- 11	309 - 2	1	CM316	M		O					
209-54169- 13		1	CM316	M		O					
209-54169- 15		1	CM316								
209-54169- 17		1	CM316	M		O					
209-54169- 19		1	CM316	M		O					
209-54169- 23		1	CM316	M		O					
209-54169- 31	303 - 3	1	CM316	M		O					
209-54169- 41	303 - 4	1	CM316	M		O					
209-54169- 51		1	CM316								
209-54170	209	1	CM313	M		O					
	210 - 39										
	211 - 13										
	215 - 10										
	217										
	221 - 4										
	222										
	226										
	253A- 3	1									
	234 - 36										
	236										
	247										
	259 -270										
	275										
	277										
	278										
	281										
	290										
	291										
	292 - 3										
	293 - 1										
	303										
209-54170- 11	303	1	CM313	M		O					
209-54170- 31	303	1	CM313	M		O					
209-54170- 41	303	1	CM313	M		O					
209-54170- 51		1	CM313								
209-54171		2	BD433	M		O					
209-54171- 3		2	BD433	M		O					
209-54172		1	BL341	M		O					
209-54172- 3		1	BL341	M		O					
209-54173	215 - 5	1	BW140	M		O					
	216 - 5										
209-54173- 3		1	BW140	M		O					
209-54173- 5		1	BW140	M		O					
209-54173- 7		1	BW140	M		O					
209-54173- 9		1	BW140	M		O					
209-54173- 11	216	1	BW140	M		O					
209-54173- 13		1	BW140	M		O					
209-54174		2	DG245	M		O					
209-54174- 1		1	DG245								
209-54174- 2		1	DG245								
209-54175- 1		1	BY 8	M		O					
209-54175- 2		1	BY 8	M		O					
209-54175- 3		2	BY 8	M		O					
209-54175- 4		2	BY 8	M		O					
209-54176	302 - 20	1	CY 55	M		F					
	310 - 4										
	319 - 70										
209-54177		1	CM194	M		O					
209-54177- 3		1	CM194	M		O					
209-54177- 5				M		O					
209-54177- 11		1	CM194	M		O					
209-54177- 21				M		O					
209-54178		1	BW168	M		O					
209-54178- 3		1	BW168	M		O					
209-54178- 5		1	BW168	M		O					
209-54178- 7		1	BW168	M		O					
209-54178- 9		1	BW168	M		O					
209-54178- 11		1	BW168	M		O					
209-54179		1	BL342	M		O					
209-54180		1	BL343	M		O					
209-54181		1	BL344	M		O					
209-54182- 3		1	CU221	M		O					
209-54182- 5		1	CU221	M		O					
209-54182- 7		1	CU221	M		O					
209-54182- 9		1	CU221	M		O					

PART NUMBER	FIGURE AND INDEX	TOTAL QTY.	MICRO-FILM NUMBER	MAINTENANCE CODE DATA: SOURCE CODE	INSTL CAPABILITY	MIL-INSTL CAPABILITY	RECOVERABILITY	SUPPORT EQUIPMENT	FEDERAL STOCK NUMBER DATA: COGNIZANCE CODE	FEDERAL STOCK NUMBER	MFG. CODE (TSMC)
209-54184- 3	258	2	DQ 84	P1	F	O	C		R	6220-500-2307	D336
	288										
	305										
	306 - 23										
209-54184- 9	242	1	DQ 84	P1	F	O	C		R	6220-500-2308	D336
	315 - 39										
	318 - 32										
209-54184- 11	242	1	DQ 84	P1	F	O	C		R	6220-500-2309	D336
	315 - 41										
	318 - 33										
209-54184- 13	288	1	DQ 84	P1	F	O	C		R	6220-500-2310	D336
	290										
	315 - 33										
	318 - 29										
209-54184- 15	247	1	DQ 84	P1	F	O	C		R	6220-500-2311	D336
	288										
	315 - 37										
	318 - 31										
209-54184- 17	234	1	DQ 84	P1	F	O	C		R	6220-500-1558	D336
	235										
	288										
	305										
	306 - 24										
209-54184- 25	267	1	DQ 84	P1	F	O	C		R	6220-500-2305	D336
	288										
209-54184- 33	291										
	315 - 35										
209-54184- 39	245	1	DQ 84	P1	F	O	C		R	6220-500-2304	D336
	288										
	319 - 31										
	318 - 28										
209-54184- 41	267 - 6	1	DQ 84						R	6220-588-4832	D336
	288										
	318 - 30										
209-54185- 3		1	BD434	M		O					
209-54185- 5		1	BD434	M		O					
209-54186	314 - 78	1	BU174	M		O					
209-54186- 3		1	BU174	M		O					
209-54186- 5		1	BU174	M		O					
209-54186- 7		1	BU174	M		O					
209-54186- 11		1	BU174	M		O					
209-54186- 13		1	BU174	M		O					
209-54186- 19		1	BU174	M		O					
209-54186- 23		1	BU174	M		O					
209-54186-101	314 - 79	1	BU174	M		O					
209-54186-201	314 - 80	1	BU174	M		O					
209-54186-401	314 - 81	1	BU174	M		O					
209-54186-501	314 - 82	1	BU174	M		O					
209-54186-601		1	BU174								
209-54186-701	314 - 83	1	BU174	M		O					
209-54187	314 - 75	1	BV293	M		O					
	319 - 66										
209-54188	314 - 76	1	BV 90	M		O					
	319 - 67										
209-54188- 3		1	BV 90	M		O					
209-54189	122	1									
	209										
	210 - 36										
	211 - 10										
	212										
	215 - 7										
	221 - 1										
	226										
	234 - 62										
	243										
	245										
	248 - 1										
	251 - 5										
	252										
	253 - 1										
	255										
	258 - 2										
	260										
	262										
	263										
	270										
	273 - 1										
	276 - 1										
	281										
	283										
	291										
	293 - 2										
	207 - 22	1	CN 78	A		O					
	314										
209-54189-201	314	1	CN 78	A		O					
209-54189-301	314	1	CN 78	A		O					
209-54189-401	314	1	CN 78	A		O					
209-54189-501	314	1	CN 78	A		O					
209-54189-601	314	1	CN 78	A		O					
209-54189-621		1	CN 78								
209-54189-701	314	1	CN 78	A		O					
209-54190	234 - 15	2	BY 93	M		O					
	235 - 15										
	279 - 15										
209-54191- 5		1	BJ 63	M		O					
209-54191- 6		1	BJ 63	M		O					
209-54191- 11		1	BJ 63	M		O					
209-54191- 12		1	BJ 63	M		O					
209-54192- 3	279 - 18	1	BD436	M		F					
209-54192- 5	234 - 18	1	BD436	M		F					
	235 - 18										
209-54192- 9	309 - 1	1	DG117	M		O					
209-54193	234 - 16	2	BD437	M		O					
	235 - 16										
	261 - 17										

PART NUMBER	FIGURE AND INDEX	TOTAL QTY.	MICRO-FILM NUMBER	MAINTENANCE CODE DATA: SOURCE CODE	INSTL CAPABILITY	MIL-INSTL CAPABILITY	RECOVERABILITY	SUPPORT EQUIPMENT	FEDERAL STOCK NUMBER DATA: COGNIZANCE CODE	FEDERAL STOCK NUMBER	MFG. CODE (TSMC)
	279 - 16										
209-54194	234	1	BD438	M		O					
	235										
	279										
209-54195		2	BM163	M		O					
209-54197		1	BD439	M		F					
209-54198- 1		1	BL347	M		O					
209-54198- 2		1	BL347	M		O					
209-54199		2	BM341	M		O					
209-54200	279	1	BL347	M		O					
209-54200- 3		1	BL347	M		O					
209-54201	279	1	BV160	M		O					
209-54203	243	1	BL349	A		F					
	244										
209-54206	243 - 19	1	BV 89	M		O					
	244 - 18										
209-542101		1	DG110	M		O					
209-542102		2	DM150	M		O					
209-542104		2	DM 96	M		O					
209-542104- 3		1	DM 96	M		O					
209-542105- 3		1	DM151	M		O					
209-542105- 5		1	DM151	M		O					
209-542106		1	DL134								
209-542107		1	DM157	M		O					
209-542107- 3		1	DM157	M		O					
209-542107- 5		1	DM157	M		O					
209-542108	271 - 41	1	DQ 85	M		O					
209-542108- 3		1	DQ 85	M		O					
209-542109		1	DP280	M		O					
209-54211		1	BT221	U							
209-542111		1	DM172	M		O					
209-542111- 3		1	DM172	M		O					
209-542111- 5		1	DM172	M		O					
209-542113		1	DS 80								
209-542114	229	1	DQ 63	M		O					
209-542114- 3		1	DQ 63	M		O					
209-542115		1	DR 52								
209-542116		1	DR165	M		O					
209-542116- 3		1	DR165	M		O					
209-542117		2	DR 97								
209-542117- 1	251 - 43	1	DR 97	M		O					
209-542117- 2	251	1	DR 97	M		O					
209-542117- 3		1	DR 97	M		O					
209-542117- 4		1	DR 97	M		O					
209-542118- 1	251	1	DR129	M		O					
209-542118- 2	251	1	DR129	M		O					
209-542119- 1	251 - 42	1	DR130	M		O					
209-542119- 2	251	1	DR130	M		O					
209-542119- 3		1	DR130	M		O					
209-542119- 4		1	DR130	M		O					
209-54212		1	BT223	U							
209-542121	244	1	DR173	A		F					
209-542122		1	DR221	M		O					
209-542123	244 - 6	1	DR210	P1	F	O	C		R	1560-574-6061	AMAA
209-542124	244 - 2	1	DR222	P1	F	O	C		R	1560-574-6062	AMAA
209-542124- 3		1	DR222	X1							
209-542125		1	DR223								
209-54213	234 - 99	1	BL350	P1	F	O	C		R	1560-570-2310	AMAA
	235										
	235 - 99	1									
209-54214	234	1	BY 67	A		F					
	235										
209-54216		1	CA 10								
209-54216- 3		1	CA 10								
209-54217		1	BV 30								
209-54218		1	BV 26								
209-54218- 3		1	BV 26								
209-54219		1	BV 16								
209-54220	234 - 21	1	BX 30	M		O					
	235 - 21										
209-54220- 3		1	BX 30	M		O					
209-54220- 5		1	BX 30	M		O					
209-54220- 7		2	BX 30	M		O					
209-54220- 9		1	BX 30	M		O					
209-54223		1	BV108	M		O					
209-54224		1	BV 94	M		O					
209-54224- 3		1	BV 94	M		O					
209-54224- 5		1	BV 94	M		O					
209-54224- 7		1	BV 94	M		O					
209-54224- 11		1	BV 94	M		O					
209-54225- 5		1	CV111	M		O					
209-54225- 9		1	CV111	M		O					
209-54225- 10		1	CV111	M		O					
209-54225- 12		1	CV111	M		O					
209-54225- 13		1	CV111	M		O					
209-54225- 18		1	CV111	M		O					
209-54225- 19		1	CV111	M		O					
209-54225- 21		1	CV111	M		O					
209-54225- 23	195 - 21	1	CV111	M		O					
209-54225- 31		1	CV111	M		O					
209-54225- 41		1	CV111	M		O					
209-54225- 42		1	CV111	M		O					
209-54225- 43		2	CV111	M		O					
209-54225- 57		1	CV111	M		O					
209-54225- 59		1	CV111	M		O					
209-54225- 63		1	CV111	M		O					
209-54225- 65		1	CV111	M		O					
209-54225- 81		1	CV111	M		O					
209-54225- 82		1	CV111	M		O					
209-54225- 85		1	CV111	M		O					
209-54225- 91		1	CV111	M		O					
209-54225- 92		1	CV111	M		O					
209-54225-111		1	CV111	M		O					
209-54225-201	295 - 48	1	CV111	M		O					
209-54225-301	295	1	CV111	M		O					

PART NUMBER	FIGURE AND INDEX	TOTAL QTY.	MICRO-FILM NUMBER	MAINTENANCE CODE DATA: SOURCE CODE	INSTL CAPABILITY	PRE-INSTL CAPABILITY	RECOVERABILITY	SUPPORT EQUIPMENT	FEDERAL STOCK NUMBER DATA: COGNIZANCE CODE	FEDERAL STOCK NUMBER	MFG. CODE (TSMC)
209-54225-401	295 - 49	1	CV111	M		0					
209-54226	208 - 14										
	209										
	210 - 42										
	211 - 15										
	213										
	215										
	216										
	222										
	223 - 39										
	226 - 6										
	227 - 36										
	233 - 2										
	234 - 60										
	235 - 59										
	248										
	251 - 10										
	254 - 1										
	263										
	265 - 9										
	278										
	279										
	281 - 6										
	283 - 3										
	286 - 11										
	291										
	207 - 14	1	CV113								
209-54226- 11		1	CV113								
209-54226-201	295	1	CV113	A		0					
209-54226-301	295	1	CV113	A		0					
209-54226-401	295	1	CV113	A		0					
209-54226-411	268	1	CV113	A		0					
	295										
209-54227	234 - 20	1	BL352	M		0					
	235 - 20										
209-54227- 3		1	BL352	M		0					
209-54228- 3	234 - 82	1	CS140	P1	F	0	C				
	235 - 81										
209-54228- 5	234 - 83	1	CS140	P1	F	0	C		R	1560-323-4167	ANAA
	235 - 82										
209-54232- 1		2	BH164								
209-54232- 3		1	BH164	M		0					
209-54233		1	DP 92								
209-54233- 5		1	DP 92								
209-54233- 7		1	DP 92	M		0					
209-54233- 9		1	DP 92	M		0					
209-54233- 15		1	DP 92	M		0					
209-54233- 19		1	DP 92	M		0					
209-54233- 21		1	DP 92	M		0					
209-54233- 23		1	DP 92	M		0					
209-54233- 25		1	DP 92	M		0					
209-54233- 27		1	DP 92	M		0					
209-54233- 29		1	DP 92	M		0					
209-54233- 31		1	DP 92	M		0					
209-54233- 33		1	DP 92	M		0					
209-54233- 35		1	DP 92	M							
209-54234- 3	234 - 66	1	CC122	P1	F	0	C		R	1560-522-4614	ANAA
	235 - 65										
	238 - 4										
209-54234- 5	234 - 67	1	CC122	P1	F	0	C		R	1560-309-4706	ANAA
	235 - 66										
	238 - 5										
209-54235- 3		1	BL356	M		0					
209-54235- 5		1	BL356	M		0					
209-54237	234 - 80	2	BD440	X1							
	235 - 79										
	238 - 18										
209-54238		2	BH165								
209-54239	282	1	BH166	M		0					
209-54240	358	13	DM 91	M		0					
209-54245	243 - 26	2	BH167	M		0					
	244 - 25										
209-54246		1	DJ 33	M		0					
209-542470	249 - 1										
209-54248		2	DP 93	M		0					
209-54248- 11		1	DP 93	M		0					
209-54249	226 - 4										
	234 - 55										
	235 - 54										
	250										
	281 - 8										
	302										
	207 - 10	1	CV128	M		F					
	208 - 10										
209-54249- 11	302	1	CV128	M		F					
209-54249- 21	302	1	CV128	M		0					
209-54249- 31	246 - 2	1	CV128	M		0					
	302										
209-54250- 1		1	BV111	M		0					
209-54250- 2		1	BV111	M		0					
209-54250- 3		1	BV111	M		0					
209-54250- 4		1	BV111	M		0					
209-54250- 5		1	BV111	M		0					
209-54250- 6		1	BV111	M		0					
209-54251- 1		2	BH169	M		0					
209-54251- 2		2	BH169	M		0					
209-54251- 3		2	BH169	M		0					
209-54251- 4		2	BH169	M		0					
209-54252		1	BH170	M		0					
209-54253		1	BE 1	M		0					
209-54254		1	BL358	M		0					
209-54254- 3		1	BL358	M		0					
209-54254- 5		1	BL358	M		0					
209-54255		1	BH171	M		0					
209-54255- 3		1	BH171	M		0					

PART NUMBER	FIGURE AND INDEX	TOTAL QTY.	MICRO-FILM NUMBER	MAINTENANCE CODE DATA: SOURCE CODE	INSTL CAPABILITY	PRE-INSTL CAPABILITY	RECOVERABILITY	SUPPORT EQUIPMENT	FEDERAL STOCK NUMBER DATA: COGNIZANCE CODE	FEDERAL STOCK NUMBER	MFG. CODE (TSMC)
209-54255- 5		1	BH171	M		0					
209-54256	234 - 47	1	BH172	M		0					
	235 - 46										
209-54257	234 - 43	1	BL359	M		0					
	235 - 42										
209-54260- 1	171 - 48	1	BL360	P1	0	0	S		R	1560-570-2311	ANAA
	357										
209-54260- 2	171	1	BL360	P1	0	0	S		R	1560-570-2312	ANAA
	357										
209-54261- 1		1	BL361	P1	F	0	S		R	1560-570-2313	ANAA
209-54261- 2		1	BL361	P1	F	0	S		R	1560-570-2314	ANAA
209-54262		2	BL362	P1	F	0	S		R	1560-570-2315	ANAA
209-54262- 1	18 - 13	1	BL362								
	18 - 64										
209-54262- 2	18	1	BL362								
209-54264		1	BN 54	M		0					
209-54264- 3		1	BN 54	M		0					
209-54265	215 - 2	1	BN 83	M		0					
	216 - 2										
209-54265- 3		1	BN 83	M		0					
209-54265- 5		1	BN 83	M		0					
209-54265- 7		1	BN 83	M		0					
209-54265- 9		1	BN 83	M		0					
209-54269	295 - 30	1	DS 79	M		0					
209-54270		1	BH173								
209-54271		1	CC 75								
209-54272		1	BL364								
209-54273		1	BL365								
209-54274	264 - 82	1									
	284 - 57										
209-54275	284	1	BL369	M		0					
209-54275- 3		1	BL369	M		0					
209-54276		1	BJ 35	M		0					
209-54277	279	1	DJ 75	M		0					
209-54277- 3		1	DJ 75	M		0					
209-54278	279	1	DJ 76	M		0					
209-54278- 3		1	DJ 76	M		0					
209-54279		1	DJ 77	M		0					
209-54281	313 - 1	1	BL366								
209-54281- 3		1	BL366	M		0					
209-54281- 5		1	BL366	M		0					
209-54281- 11	313	1	BL366	M		0					
209-54282	313 - 3	1	BN127	P1	F	0	C		R	1560-570-2316	ANAA
209-54282- 3	313	1	BN127	P1		0	C		R	1560-586-4578	ANAA
209-54283	233										
	249 - 7										
	250										
	207 - 12	1	BL367	A		F					
209-54283- 11	207 - 12	1	BL367	M		0					
	208 - 12										
	233										
	313										
209-54284	283 - 7	1	BL368	M		0					
209-54284- 3		1	BL368	M		0					
209-54284- 5		1	BL368	M		0					
209-54285		1	BL370	M		0					
209-54286		1	BE 2								
209-54287		1	BE 3								
209-54288- 3		1	BH175								
209-54288- 5		1	BH175								
209-54288- 7		1	BH175								
209-54289		1	BS193								
209-54290		1	DM164								
209-54291		1		M		0			R	5935-698-0484	0336
209-54292	234 - 41	1	BH176	M		0					
	235 - 41										
209-54292- 3		1	BH176	M		0					
209-54292- 5		1	BH176	M		0					
209-54293	270 - 60	1		M		0					
209-54293- 3		1		M		0					
209-54293- 5		1		M		0					
209-54294	270 - 37	1		M		0					
209-54294- 3		1		M		0					
209-54294- 5		1		M		0					
209-54295	270 - 47	1	BW138	M		0					
209-54295- 3		1	BW138	M		0					
209-54295- 5		1	BW138	M		0					
209-54295- 7		1	BW138	M		0					
209-54295- 9		1	BW138	M		0					
209-54295- 11		1	BW138	M		0					
209-54296	270 - 7	1	DJ 93	M		0					
	270 - 35										
209-54297		4	BX 85	M		0					
209-54297- 3		4	BX 85	M		0					
209-54297- 5		4	BX 85	M		0					
209-54298		1	DR 51	M		0					
209-54299		1	DS 50								
209-54300		4	BX142	M		0					
209-543101- 3		4	DG164	M		F					
209-543101- 5		4	DG164	M		F					
209-543101- 7		4	DG164	M		F					
209-543102	284 - 2	1	DP 42	M		0					
209-543103	264 - 85	1									
	284 - 1										
	333 -110										
209-543104- 3		1	DP144	M		0					
209-543104- 5		1	DP144	M		0					
209-543104- 11	284 - 49	1	DP144	M		0					
209-543104- 21	284 - 48	1	DP144	M		0					
209-543105	284 - 55	1	DG 26						R	6150-609-4300	B210
	285 - 74										
209-543106	285 - 25	1	DM213						R	6150-609-4297	B210
209-543107	284 - 56	1	DP 94	M		0					
209-543108- 3	284 - 21	1	DP 95	M		0					
209-543108- 5	284 - 19	1	DP 95	M		0					

PART NUMBER	FIGURE AND INDEX	TOTAL QTY.	MICRO-FILM NUMBER	MAINTENANCE CODE DATA: SOURCE CODE	INSTL CAPABILITY	PRE-INSTL CAPABILITY	RECOVERABILITY	SUPPORT EQUIPMENT	FEDERAL STOCK NUMBER DATA: COGNIZANCE CODE	FEDERAL STOCK NUMBER	MFG. CODE (TSMC)
209-543109	284 - 20	1	DP 96	M		O					
209-543110		1		M		O					
209-543111		1		M		O					
209-543112	285 - 1	1	DQ 59						R	1095-609-4321	B210
	286 - 19										
	334 -150										
209-543112- 3	285 - 31	1	DQ 59								
209-543112- 61	285 - 1	1	DQ 59								
	286 - 19										
	334										
209-543115	285 - 29	1	DN193								
209-543116	285 - 30	1									
209-543117	285 - 20	1	DP 15						R	6150-609-4298	B210
209-543117- 11	285	1									
209-543118		1	DG 28	M		O					
209-54312		1	DM174	M		O					
	285 - 33	1									
	286 - 18										
	334										
209-543120- 1		1									
209-543120- 11	285 - 33	1							R	1680-609-4299	B210
	334 - 83										
209-543120- 21	285	1									
	334										
209-543120-11		1									
209-543121	285 - 34	1	DM167	A		O					
209-543121- 11	285	1	DM167								
209-543121- 21	285A- 31	1									
209-543122	285 - 66	1	DM203						R	6150-609-4301	B210
209-543124	285 - 73	1							R	6150-609-4322	B210
209-543125	285 - 72	1	DR131						R	6150-609-4323	B210
209-543126	285 - 71	1	DM205								
209-543127		1	DP 17								
209-543128		1	DP 25	M		O					
209-543128- 3		1		M		O					
209-543128- 5		1		M		O					
209-543128- 11		1		M		O					
209-543129		1	DG 86								
209-543130		1	DL181								
	334 -105	1									
209-543130- 3	334	1									
209-543131	285 - 73	1									
209-543131- 3				M		O					
209-543132		1	DN223								
209-543134		1	DK 88	M		O					
209-543135		1	DR 29								
209-543135-121		1		M		O					
209-543135-131		1		M		O					
209-543135-141		1		M		O					
209-543136	264 - 88	1									
209-543137	264 - 87	1									
209-543137-301		1		A		O					
209-543138	264 - 90	1									
209-543139		1	DQ118								
209-54314		1	DQ134								
209-543142	120	1	DQ126						R	1680-602-3752	Y120
	229 - 6										
209-543147	295	1	DR132	M		O					
209-543148	227 - 41	1	DR163	M		O					
209-543149	227	1	DR154	A		O					
	268 - 5										
209-54315- 3		1	DJ 51	M		O					
209-54315- 5		1	DJ 51	M		O					
209-543157	236	1		P1	F	O	C		R	5930-594-8643	D334
209-54316	292 - 9	2	DQ239	P	F	O	C		R	1560-558-2673	ANAA
209-543168	220 - 3	1		M		O					
	237 - 4										
209-543169	220 - 13	1		M		O					
209-543170	206 - 15	1									
	224										
	233										
209-543186		1	DR 11								
209-543187		1	DQ249								
209-543188		1	DR 12								
209-543189		1	DQ193								
209-54319		1	DQ194								
209-543190- 11									R	1680-601-8011	Y120
209-543191		1	DQ195								
209-543194		2		M		O					
209-543195		1		M		F					
209-543199		1	DR 32								
209-543202		1		M		O					
209-543203	97 -197	1		P1	F	O	S		R	2915-601-7605	Y120
	220										
209-543204				A		O					
209-54321		1	BQ 16								
	269 - 9	1									
	269A										
209-543211	269A- 1	1									
209-543212	269A- 2	1									
209-543213	269 - 36	1									
	269A- 27	1									
209-543214	269 - 33	1									
	269A- 18	1									
209-543215	269 - 38	1									
	269A- 32	1									
209-543216	269A- 3	1									
209-543217	269	1									
209-543218	269 - 39	1		A		O					
	347 - 10	1									
	348 - 12										
209-543218- 3				M		O					
209-543220	269 - 28	1									
	269 - 43	1									
209-543220- 3	269	1									

PART NUMBER	FIGURE AND INDEX	TOTAL QTY.	MICRO-FILM NUMBER	MAINTENANCE CODE DATA: SOURCE CODE	INSTL CAPABILITY	PRE-INSTL CAPABILITY	RECOVERABILITY	SUPPORT EQUIPMENT	FEDERAL STOCK NUMBER DATA: COGNIZANCE CODE	FEDERAL STOCK NUMBER	MFG. CODE (TSMC)
209-543221	295	4		M		O					
209-54326		1	BL371	M		O					
209-54327		1	BL372	M		O					
209-54328		1	BQ200	M		F					
209-54335		1		M		O					
209-54338		2	BY 94	P	F	O	C		R	1560-569-9071	ANAA
209-54339		2	BY 82	M		O					
209-54340	314 - 4	1		M		O					
209-54343	300 - 11	1	CA157	M		F					
	301 - 8										
209-54346	53 - 23	1	CN 56	M		O					
209-54347	232 - 6	1		P	F	O	C				
209-54348	230	1		M		O					
209-54358		1	BV282	M		O					
209-54359		2	BE 5	M		O					
209-54362		1	BV 12								
209-54363		1	BV 10						R	1280-924-1791	ANAA
209-54364		1	BV 13								
209-54365		1	BV 14								
209-54366		2	BV 11								
209-54367		1	BV213								
209-54368	284A	2	CV 19	P1	F	O	C		R	5355-570-2317	ANAA
209-54368- 3	284A- 25	1	CV 19	X1							
209-54369		1	BE 6	M		O					
209-54369- 3		1	BE 6	M		O					
209-54370	264 - 89	1									
209-54372- 3		2		M		F					
209-54372- 5		1		M		F					
209-54372- 7		1		M		F					
209-54372- 9		1		M		F					
209-54372- 11		1		M		F					
209-54372- 13		1		M		F					
209-54372- 15		2		M		F					
209-54372- 17		1		M		F					
209-54372- 21		1		M		F					
209-54372- 31		1		M		F					
209-54375	264 - 74	1									
209-54376		1	BN135								
209-54376- 3		1	BN135	M		O					
209-54376- 5		1	BN135	M		O					
209-54376- 11	264 - 78	1									
209-54377	264 - 79	1									
209-54377- 3		1	BL374	M		O					
209-54378	264 - 81	1									
209-54380		1	CA 1	U							
209-54381	228 - 1	1	BV 99	A		F					
209-54382	228 - 6	1	BN177	M		O					
209-54382- 3		1	BN177	M		O					
209-54383- 3	228 - 8	1	BE 7	M		O					
209-54383- 5	228 - 9	1	BE 7	M		O					
209-54384		1	BE 9	M		O					
209-54385- 3		1	CU222	M		O					
209-54386		1	BV 25								
209-54387	228 - 19	1	BJ109	M		O					
209-54388	228 - 11	1	BP 77	A		F					
209-54389	228	1	BL375	A		F					
	264 - 2	1									
209-54390		1	BS 68	U							
209-54391		1	BS 48	M		O					
209-54392- 3		1	DP 36	M		O					
209-54392- 5	284 - 17	1	DP 36	M		O					
209-54392- 7	284 - 15	1	DP 36	M		O					
209-54392- 9	284 - 16	1	DP 36	M		O					
209-54392- 11	284 - 18	1	DP 36	M		O					
209-54392-101	284 - 8	1	DP 36	M		O					
209-54394		1	BV194								
209-54395- 5		1	DM109	M		O					
209-54395- 7		1	DM109	M		O					
209-54395- 9		1	DM109	M		O					
209-54395- 11	338 - 89	2	DM109	M		O					
209-54395- 13	337 - 51	1									
209-54395-105		1	DM109	M		O					
209-54395-107		1	DM109	M		O					
209-54395-108		1	DM109	M		O					
209-54395-109		1	DM109	M		O					
209-54395-113	337 - 52	1									
209-54395-119		1	CU222								
209-54397		1									
209-54398- 1		1		M		O					
209-54398- 2		1		M		O					
209-54399		1	DG247	M		F					
209-54400		1	DR189								
209-54410	286 - 5	1									
209-54411		1	DR314	U							
209-54415- 1		1	BL378	M		O					
209-54415- 2		1	BL378	M		O					
209-54416- 3		1	DP 99	M		O					
209-54416- 5		1	DP 99	M		O					
209-54416- 7		1	DP 99	M		O					
209-54416- 9		1	DP 99	M		O					
209-54418	279 - 1	1	AW410	A		F					
209-54419	234 - 1	1	AW411	A		F					
	235 - 1										
209-54420		1	BW155	M		O					
209-54421		1	BM179	M		O					
209-54422	232	1	CY 41	A		F					
209-54422- 3		1	CY 41	M		O					
209-54423		2	DJ 41	M		O					
209-54423- 3		2	DJ 41	M		O					
209-54424	234 -101	1									
	235 -100	1									
		1	BV156	P1	F	O	C		R	5975-511-2366	ANAA
209-54425	232 - 8	1	CM 83	M		O					
209-54426		1	BW172	M		O			R	1560-031-5150	ANAA
209-54426- 3		1	BW172	M		O					

PART NUMBER	FIGURE AND INDEX	TOTAL QTY.	MICRO-FILM NUMBER	MAINTENANCE CODE DATA: SOURCE CODE	INSTL CAPABILITY	PRE-INSTL CAPABILITY	RECOVERABILITY	SUPPORT EQUIPMENT	COGNIZANCE CODE	FEDERAL STOCK NUMBER DATA: FEDERAL STOCK NUMBER	MFG. CODE (TSMC)
209-54426- 5		1	BW172	M		O					
209-54426- 11	215 - 4	1	BW172	M		O					
	216 - 4										
209-54427	278 - 17	1	BE 10	M		O					
209-54428	278 - 16	1	BE 11	M		O					
209-54429	278	1	BH180	M		O					
209-54430- 3		1	CC142	M		O					
209-54430- 5		1	CC142	M		O					
209-54430- 7		1	CC142	M		O					
209-54430- 9		1	CC142	M		O					
209-54430- 11		1	CC142	M		O					
209-54430- 13		1	CC142	M		O					
209-54430- 15		1	CC142	M		O					
209-54430- 17		1	CC142	M		O					
209-54430- 19		1	CC142	M		O					
209-54430- 23		1	CC142	M		O					
209-54432	359	1	BP176	U							
209-54432- 11		1	BP176								
209-54434		1	BH182	M		O					
209-54435		1	BH183	M		O					
209-54438		1	BL380								
209-54439		1	BL381	M		O					
209-54444		1	BP183	M		O					
209-54446	256 - 41	1		M		O					
209-54447	256 - 38	1	DK 63	M		O					
209-54447- 5		1	DK 63	M		O					
209-54447- 7		1	DK 63	M		O					
209-54449		1		M		O					
209-54449- 3		1		M		O					
209-54449- 5		1		M		O					
209-54449- 11		1		M		O					
209-54450		1	DP243	M		O					
209-54450- 11		1	DP243	M		O					
209-54452	227 - 4	1	DM 17								
209-54452- 11	227	1	DM 17	M		O					
209-54453	227 - 29	1	DM 13								
209-54453- 3		1	DM 13	M		O					
209-54453- 5		1	DM 13	M		O					
209-54453- 7		1	DM 13	M		O					
209-54453- 9		1	DM 13	M		O					
209-54453- 11		1	DM 13	M		O					
209-54453- 19		1	DM 13	M		O					
209-54453- 23		1	DM 13	M		O					
209-54453- 25		1	DM 13	M		O					
209-54453- 27		2	DM 13	M		O					
209-54453- 29		1	DM 13	M		O					
209-54453- 31		1	DM 13	M		O					
209-54453- 33		1	DM 13	M		O					
209-54453- 35		1	DM 13	M		O					
209-54454	227 - 33	1									
209-54454- 11	227	1		M		O					
209-54455		1	DH191	M		O					
209-54455- 3		1	DH191	M		O					
209-54455- 5		1	DH191	M		O					
209-54455- 7		1	DH191	M		O					
209-54455- 11		1	DH191	M		O					
209-54456		3		M		O					
209-54456- 3		1		M		O					
209-54457	298 - 21	1		M		F					
209-54458	234 - 58										
	246 - 1										
	249 - 2										
	310										
	207 - 24	1		A		F					
209-54459		1		M		O					
209-54460		1		M		O					
209-54462		2	DS107	M		O					
209-54462- 3		2	DS107	M		O					
209-54462- 5		2	DS107	M		O					
209-54463	304 - 2	1	DR133	M		O					
209-54470		1		M		O					
209-54471		1		M		O					
209-54471- 3	319 - 69	1									
209-54471- 5		1		M		O					
209-54471- 11	319	1		M		O					
209-54471- 21	319	1		M		O					
209-54471- 31	319	1		M		O					
209-54472	322	1		A		O					
	208 - 20										
	209										
	210										
	211										
	212										
	216 - 7										
	221 - 2										
	222										
	227 - 1										
	233A- 4	1									
	235 - 61										
	247										
	248										
	251 - 6										
	253 - 2										
	254 - 2										
	255										
	258 - 3										
	262										
	265 - 2										
	271 - 3										
	273										
	276 - 2										
	286										
	294 - 14										
	319										
209-54472- 13	268	1		A		F					

PART NUMBER	FIGURE AND INDEX	TOTAL QTY.	MICRO-FILM NUMBER	MAINTENANCE CODE DATA: SOURCE CODE	INSTL CAPABILITY	PRE-INSTL CAPABILITY	RECOVERABILITY	SUPPORT EQUIPMENT	COGNIZANCE CODE	FEDERAL STOCK NUMBER DATA: FEDERAL STOCK NUMBER	MFG. CODE (TSMC)
	319										
209-54472- 21	268	1									
	319										
209-54472- 31	319	1		M		O					
209-54473		1	DH 83	M		O					
209-54473- 3		1	DH 83	M		O					
209-54473- 5		1	DH 83	M		O					
209-54473- 7		1	DM 83	M		O					
209-54474	265 - 11	1	DP 35	A							
	266										
209-54475	228 - 6	1		M		O					
209-54476- 1		1		M		O					
209-54476- 3		1		M		O					
209-54476- 5		1		M		O					
209-54476- 7		1		M		O					
209-54481		1	DN 16	M		O					
209-54481- 31		1	DN 16	M		O					
209-54626	234 - 3	1	BH169	P1	F	O	S		R	1560-031-5150	ANAA
	235 - 3										
	279 - 3										
209-54627	234 - 5	1	BL382	M		O					
	235 - 5										
	279 - 5										
209-54627- 3		1	BL382	M		O					
209-54627- 4		1	BL382	M		O					
209-54628		1	BO225	M		O					
209-54702		1	BE 12	M		O					
209-54703		1	BE 13	M		O					
209-54704	270 - 97	1	BE 14	M		O					
209-54705	270	1	DS 34	M		O					
209-54705- 11	270	1	DS 34	M		O					
209-54706	270 - 95	1	BE 15	M		F					
209-54707	270 - 90	1	BE 16	M		O					
209-54721	183 - 70	1	DL 45								
209-54740	188	1									
	293 - 22										
209-54741	188 - 36	1									
209-54742	175 - 82	1	DR211	M		O					
209-54743	175 - 83	1	DR212	M		O					
209-54744	21 -143	1	DR213	M		O					
	175 - 80										
209-54745		1	DR214	M		O					
209-54746		1	DR215	M		O					
209-54747		2	DR224	M		O					
209-54748	175 - 84	1	DR340	M		O					
209-54749		1		M		O					
209-54750	175 - 1	1									
	175 - 2										
	271 - 17										
	271 - 32										
209-54751	271 - 74	1		M		O					
209-54751- 3		2		M		O					
209-54751- 5		1		M		O					
209-54751- 7		1		M		O					
209-54752	271 - 25	1		M		O					
209-54801- 1	259	1	BL384	A		F					
209-54801- 2	259	1	BL384	A		F					
209-54802	259 -160	2	BL385	M		O					
209-54804- 3		1	BL386	X1							
209-54804- 4		1	BL386	X1							
209-54804- 11	259 -154	1	BL386	P1	F	O	C		R	1560-037-2621	ANAA
209-54804- 12	259	1	BL386	P1	F	O	C		R	1560-037-2627	ANAA
209-54805- 1	30	1	CD 41	M		O					
	259 -143										
209-54805- 2	259										
209-54805- 3		1	CD 41	M		O					
209-54805- 4		1	CD 41	M		O					
209-54805- 5		2	CD 41	M		O					
209-54805- 7		2	CD 41	M		O					
209-54805- 11	30 - 41	1	CD 41	M		O					
209-54805- 12	30	1	CD 41	M		O					
209-54806- 1		1	BL388								
209-54806- 2		1	BL388								
209-54807	259 -168	2	BL389	P	F	O	C		R	1560-511-2367	ANAA
209-54811		2	BE 17								
209-54811- 5	260 - 22	1	BE 17	M		O					
209-54811O- 1	260	1	BL391	A		F					
209-54811O- 2	260	1	BL391	A		F					
209-54817	260 - 12	1	BH185	M		O					
209-54815- 5		2	BH186	M		O					
209-54815- 7		1	BH186	M		O					
209-54815- 8		1	BH186	M		O					
209-54815- 11	45 - 88	1	BH186	M		O					
	260 - 11										
209-54815- 12	45	1	BH186	M		O					
	260										
209-54816	260 - 18	2	BE 18	M		O					
209-54818- 5	260 - 24	1	BE 19	M		O					
209-54818- 8	260	1	BE 19	M		O					
209-54818- 11	260	1	BE 19	M		O					
209-54818- 12	260	1	BE 19	M		O					
209-548184- 3		1									
209-548190- 1	316	1	BH187	A		F					
209-548190- 2	316	1	BH187	A		F					
209-548191- 1	316 - 47	1	BE 34	P	F	O	C		R	1560-511-2369	ANAA
209-548191- 2	316	1							R	1560-511-2380	ANAA
209-548193- 1	316 - 9	1	BE 35	P	F	O	C		R	1560-511-2399	ANAA
209-548193- 2	316	1	BE 35	P	F	O	C		R	1560-511-2407	ANAA
209-548194- 1	316 - 48	1	BE 37	M		O					
209-548194- 2	316	1	BE 37	M		O					
209-548195- 1	316 - 22	1	BE 36	M		O					
209-548195- 2	316	1	BE 36	M		O					
209-548196- 1	316 - 63	1	BE 38	M		O					
209-548196- 2	316	1	BE 38	M		O					
209-548197- 1	12	1	BH188	A		F					

PART NUMBER	FIGURE AND INDEX	TOTAL QTY.	MICRO-FILM NUMBER	MAINTENANCE CODE DATA: SOURCE CODE	INST'L CAPABILITY	PRE-INST'L CAPABILITY	RECOVERABILITY	SUPPORT EQUIPMENT	FEDERAL STOCK NUMBER DATA: COGNIZANCE CODE	FEDERAL STOCK NUMBER	MFG. CODE (TSMC)
209-548197- 2	12	1	BH188	A		F					
209-548198- 1	12 - 22	1	BH189	M		O					
209-548198- 2	12	1	BH189	M		O					
209-548198- 3		2	BH189	M		O					
209-548198- 5		2	BH189	M		O					
209-548199	12 - 23	2	BE 39	P1	F	O	C		R	5306-570-2318	ANAA
209-54820	259	1	BH190	A		F					
	291 - 10										
209-54821	259 -114	1	BE 20	P	F	O	C		R	1560-511-2408	ANAA
209-54822	259 -110	1	BE 21	P	F	O	C		R	1560-511-2442	ANAA
209-54823	259 -118	1	BH191	M		O					
209-54824- 1	259 -170	1	BH192	M		O					
209-54824- 2	259	1	BH192	M		O					
209-54825	259 -159	2	BE 22	P	F	O	C		R	1560-530-8888	ANAA
209-54851- 1	259 -158	1	BH193	M		O					
209-54851- 2	259	1	BH193	M		O					
209-54852- 1	259 -171	1	BX 2	M		O					
209-54852- 2	259	1	BX 2	M		O					
209-54852- 3		1	BX 2	M		O					
209-54852- 4		1	BX 2	M		O					
209-54852- 5		2	BX 2	M		O					
209-54852- 7		2	BX 2	M		O					
209-54853- 1	259 -217	1	BL392	M		O					
209-54853- 2	259	1	BL392	M		O					
209-54853- 3		1	BL392	M		O					
209-54853- 4		1	BL392	M		O					
209-54854- 1	259 -233	1	BH194	M		O					
209-54854- 2	259	1	BH194	M		O					
209-54854- 3	259	1	BH194	M		O					
209-54854- 4	259	1	BH194	M		O					
209-54855- 1	259 -237	1	BH195	M		O					
209-54855- 2	259	1	BH195	M		O					
209-54856- 1	259	1	BL393	A		F					
209-54856- 2	259	1	BL393	A		F					
209-54857	259 -207	2	BE 23	M		O					
209-54858- 1	259 -211	1	BH196	M		O					
209-54858- 2	259	1	BH196	M		O					
209-54859- 1	259 -212	1	BE 24	M		O					
209-54859- 2	259	1	BE 24	M		O					
209-54860- 1	259	1	BH197	A		F					
209-54860- 2	259	1	BH197	A		F					
209-54862	259 -204	2	BE 25	M		O					
209-54864- 1	259 -200	2	BH198	M		O					
209-54864- 2	259 -201	2	BH198	M		O					
209-54866	259 -228	2	BE 26	M		O					
209-54867	259 -220	2	BE 27	M		O					
209-54868- 1		1		M		O					
209-54868- 2		1		M		O					
209-54868- 3		1		M		O					
209-54868- 4		1		M		O					
209-54869	259 -224	2	BE 28	M		O					
209-54870- 1	259	1	BL394	A		F					
209-54870- 2	259	1	BL394	A		F					
209-54871	259 -254	2	BE 29	P	F	O	S		R	1560-570-2319	ANAA
209-54872- 1	259 -255	1	BE 30	P	F	O	C		R	1560-511-2443	ANAA
	260 - 23										
209-54872- 2	259	2	BE 30	P	F	O	C		R	1560-544-8572	ANAA
	260										
209-54873- 1	259 -262	1	BL395	M		O					
209-54873- 2	259	1	BL395	M		O					
209-54873- 3		1	BL395	M		O					
209-54873- 4		1	BL395	M		O					
209-54874	259 -246	2	BH199	P1	F	O	S		R	1560-569-9074	ANAA
209-54877	259 -248	2	BE 31	P	F	O	S		R	1560-569-9078	ANAA
209-54878- 1	259 -244	1	BH200	P	F	O	S		R	1560-037-2623	ANAA
209-54878- 2	259	1	BH200	P	F	O	S		R	1560-037-2624	ANAA
209-54878- 3		2	BH200	M		O					
209-54878- 5		2	BH200	M		O					
209-54879- 1	259 -258	1	BH201	M		O					
209-54879- 2	259	1	BH201	M		O					
209-54879- 3	259	1	BH201	M		O					
209-54879- 4	259	1	BH201	M		O					
209-54883		2	BH202								
209-54883- 1	259 -189	2	BH202	P	F	O	S		R	1560-569-9081	ANAA
209-54885- 1	259	1	BL396	A		F					
209-54885- 2	259	1	BL396	A		F					
209-54885- 3	259 -190	1	BL396	M		O					
209-54885- 4	259	1	BL396	M		O					
209-54886	221 - 7	1	BH203	A		O					
	259										
	268 - 4										
209-54887	259 -132	1	BE 32	P	F	O	C		R	1560-569-9082	ANAA
209-54888	259 -128	1	BE 33	P	F	O	C		R	1560-511-2445	ANAA
209-54889	259 -138	1	BH204	M		O					
209-54922		1									
209-55001		1	BH234								
209-55002		1	BY251	U							
209-55032		1	BX224	M		O					
209-55035	76 - 38	1	BL397	M		O					
209-55035- 3		1	BL397	M		O					
209-5522949- 3		1									
209-55458		1									
209-55612	46 - 16	1									
209-55812- 21		1									
209-55854- 53		1									
209-56001		1	DP296	U							
209-56004		1	BX 7	U							
209-56121- 3		1	DM226	X1							
209-56121- 4		1	DM226	X1							
209-56121- 5		1	DM226	P2	O	O	S		R	1560-037-2625	ANAA
209-56121- 6		1	DM226	P2	O	O	S		R	1560-037-2626	ANAA
209-56126		1	BH206	M		O					
209-56126- 3		1	BH206	M		O					
209-56138- 3	83 - 59	1	BL398	P1	F	O	S		R	1560-323-4168	ANAA
209-56143	83 - 27	1	BY 12	A		F					
209-56143- 11		1	BY 12								
209-56143- 21	83	1	BY 12	A		F					
209-56146	83 - 34	1	BH207	P1	F	O	S		R	1560-031-5151	ANAA
209-56151		1	BW113								
209-56151- 3	83 - 78	1	BW113								
209-56151- 5	83 - 77	1	BW113	M		O					
209-56162	83 - 4	1	DM287	P1	F	O	S		R	1560-031-5152	ANAA
	203 - 94										
209-56172	83 - 3	1	BL401	M		O					
209-56311	71	AR									
209-56311- 3		1		M		O					
209-56311- 5		2		M		O					
209-56401- 3	69 - 10	1	BP 18	P1	O	O	S		R	1560-031-5153	ANAA
209-56402	69	1	BH208	P1	O	O	S		R	1560-031-5154	ANAA
209-56402- 3	69 - 17	1	BH208	X1							
209-56403	69 - 13	1	BE 40	M		O					
209-56404	69 - 16	1	DK130	M		O					
209-56405	69 - 14	1	BE 42	M			O				
209-56408	69 - 3	1	BP208	P1	F	O	S		R	1560-031-5155	ANAA
209-56408- 3		1	BP208	X1							
209-56411		1	BU 27	U							
209-564210	23 - 68	1	BS215								
209-564210- 3		1	BS215								
209-564210- 5		1	BS215	X1							
209-564210- 7		1	BS215	X1							
209-564210- 21	68 - 61	1	BS215	P1	F	O	S				
209-564210- 31	68	1	BS215	P1	F	O	S		R	1560-346-1138	ANAA
209-56601	68	1	BW197	A		F					
209-56601- 11	68	1	BW197	A		F					
209-56602- 3		1	BW159	X1							
209-56602- 5		1	BW159	X1							
209-56602- 11	68 - 43	1	BW159	X2							
209-56602- 21	68	1	BW159	X2							
209-56603- 3	68 - 33	1	BS208	X2							
209-56604	46	1	BU185	P1	F	O	S		R	1560-031-5157	ANAA
209-56604- 3		1	BU185	M		O					
209-56604- 5		1	BU185	M		O					
209-56604- 7		1	BU185	M		O					
209-56604- 9		1	BU185	M		O					
209-56604- 11		1	BU185	M							
209-56604- 12		1	BU185	M		O					
209-56604- 13		1	BU185	M		O					
209-56604- 15		1	BU185	M		O					
209-56604- 17		1	BU185	M		O					
209-56604- 18		1	BU185	M		O					
209-56604- 19		1	BU185	M		O					
209-56604- 20		1	BU185	M		O					
209-56604- 21		1	BU185	M		O					
209-56604- 23	46 - 2	2	BU185	M		F					
209-56604- 25	46 - 5	1	BU185	M		F					
209-56604- 27		1	BU185	M		O					
209-56604- 29		1	BU185	M		O					
209-56604- 31		1	BU185	M		O					
209-56604- 33		1	BU185	M		O					
209-56604- 35		1	BU185	M		O					
209-56604- 37		1	BU185	M		O					
209-56604- 39		1	BU185	M		O					
209-56605	46 - 6	1	BL402	M		O					
209-56606	46 - 4	1	BH209	M		O					
209-56607.	46 - 13	1	BJ 99	M		O					
209-56607- 3		1	BJ 99	M		O					
209-56607- 5		1	BJ 99	M		O					
209-56607- 7		1	BJ 99	M		O					
209-56608	46 - 12	1	DG138	M		O					
209-56609	46 - 11	1	DN 58	M		O					
209-56610	46 - 17	1	DH291	M		O					
209-56611	46 - 9	2	BE 44	M		O					
209-56612		1		M		O					
209-56613	68 - 48	1	BY201								
209-56613- 1		1	BY201	M		O					
209-56613- 3		1	BY201	M		O					
209-56613- 5		1	BY201	M		O					
209-56613- 11	68	1	BY201	M		O					
209-56614	23 - 57	1	BH212	M		O					
	68 - 92										
209-56615	68 - 50	1	DG139								
209-56616	46 - 22	1	BE 46	M		O					
209-56617	68	2	DJ231	P1	F	O	S		R	1560-031-5158	ANAA
209-56617- 3	68 - 4	1	DJ231								
209-56618	68 - 6	2	BL403	M		O					
209-56619	68 - 1	2	DG 98	M		O					
209-56619- 3		2	DG 98	M		O					
209-56620	23 - 67	1	DJ232	M		O					
	68 - 57										
209-56620- 3		1	DJ232	M		O					
209-56620- 5		1	DJ232	M		O					
209-56621- 3	46 - 1	1	BH266	M		F					
209-56622	68	1	DG 97	M		O					
209-56623	68 - 29	1	DG103	M		O					
209-56624- 1	68 - 16	1	DG 91	M		O					
209-56624- 2	68 - 17	1	DG 91	M		O					
209-56626	68 - 32	1									
209-56629	68 - 31	1	BH267	M		O					
209-56630	68 - 30	1	BH268	M		O					
209-56706	203 - 59	1	BP209	M		O					
209-56706- 3		1	BP209	M		O					
209-56716	203 - 34	1	CP 46	M		O					
209-56716- 3		1	CP 46	M		O					
209-56716- 5		1	CP 46	M		O					
209-56716- 7		1	CP 46	M		O					
209-56717	203 - 8	1	BE 43	M		O					
209-56717- 3		1	BE 43	M		O					
209-56718	203 - 33	1	CP 96	M		O					
209-56718- 3		1	CP 96	M		O					
209-56719	203 - 42	1	CP 95	M		O					

PART NUMBER	FIGURE AND INDEX	TOTAL QTY.	MICRO-FILM NUMBER	MAINTENANCE CODE DATA: SOURCE CODE	INST'L CAPABILITY	PRI-INST'L CAPABILITY	RECOVERABILITY	SUPPORT EQUIPMENT	COGNIZANCE CODE	FEDERAL STOCK NUMBER DATA: FEDERAL STOCK NUMBER	MFG. CODE (TSMC)
209-56719- 3		1	CP 95	M		O					
209-56720	203 - 69	1	CP 98	M		O					
209-56720- 5		1	CP 98	M		O					
209-56721		1	DL230	M		O					
209-56722		1	DL231	M		O					
209-56722- 3		1	DL231	M		O					
209-56725	203	1	CP 56	M		O					
209-56725- 3	203 - 38	1	CP 56	M		O					
209-56726	203 - 48	1		M		O					
209-56726- 3		1		M		O					
209-56727	203 - 53	1	DN 59	M		O					
209-56727- 3		1	DN 59	M		O					
209-56728	203	1	DN 60	M		O					
209-56728- 3		1	DN 60	M		O					
209-56729	203 - 76	1	DN 61	M		O					
209-56729- 3		1	DN 61	M		O					
209-56730	203 - 70	1		M		O					
209-56730- 3		1		M		O					
209-56730- 5		1		M		O					
209-56731	203 - 64	1		M		O					
209-56731- 3		1		M		O					
209-56731- 5		1		M		O					
209-56732	203 - 63	1		M		O					
209-56732- 3		1		M		O					
209-56732- 5		1		M		O					
209-56732- 7		1		M		O					
209-56748	203 - 43	1	BE 50	M		F					
209-56749	203 - 44	1	BE 51	M		F					
209-56751		1		U							
209-56752	203 - 54	1	BE 52	M		F					
209-56753	203 - 55	1	BE 53	M		F					
209-56755	203 - 95	1	BE 54	M		O					
209-56756	203 - 86	1	BX120	M		O					
209-56756- 3		1	BX120	M		O					
209-56756- 5		1	BX120	M		O					
209-56756- 11		1	BX120	M		O					
209-56758	203 - 93	1	BL411	M		O					
209-56758- 3		1	BL411	M		O					
209-56758- 5		1	BL411	M		O					
209-56758- 7		1	BL411	M		O					
209-56758- 11		1	BL411	M		O					
209-56759	203 - 89	1	BL421	M		O					
209-56759- 3		1	BL421	M		O					
209-56759- 5		1	BL421	M		O					
209-56759- 7		1	BL421	M		O					
209-56759- 11		1	BL421	M		O					
209-56760	162 - 21 203 - 74	1	CP 99	M		O					
209-56760- 3		1	CP 99	M		O					
209-56761	203 - 85	1	DG151	M		O					
209-56761- 3		1	DG151	M		O					
209-56762	203 - 92	1	BE 56	M		O					
209-56762- 3		1	BE 56	M		O					
209-56763	203 -100	1	BL413	M		O					
209-56763- 3		1	BL413	M		O					
209-56763- 5		1	BL413	M		O					
209-56763- 7		1	BL413	M		O					
209-56764	203 - 79	1	BW 37	M		O					
209-56764- 3		1	BW 37	M		O					
209-56764- 5		1	BW 37	M		O					
209-56764- 7		1	BW 37	M		O					
209-56764- 9		1	BW 37	M		O					
209-56765	203	1	BE 57	M		O					
209-56766	203	1	BE 59	M		O					
209-56767	203 - 99	1	BE 58	M		F					
209-56768	203 - 87	1	BL414	M		O					
209-56768- 3		1	BL414	M		O					
209-56768- 5		1	BL414	M		O					
209-56768- 7		1	BL414	M		O					
209-56768- 11		1	BL414	M		O					
209-56772	203 -102	1	BE 60	M		O					
209-56773	203 - 84	1	BH269	M		O					
209-58001		1	BX 86								
209-58002		1	DG281								
209-58003		1									
209-58004		1	DL 80								
209-58005		1	BU 21	U							
209-58005- 53		1	BU 21	M		F					
209-58006		1	BW139	U							
209-58007		1	BW 47	U							
209-58008		1	DJ 94	U							
209-58010		1	BX179	U							
209-58011		1	DL156								
209-58012		1	BX 31	U							
209-58013	355 PG. 1019	1	DK 52	U							
209-58014- 1	357	1	CN 70	U							
209-58014- 2	357	1	CN 70	U							
209-58014- 3		2	CN 70	M		O					
209-58014- 4		1	CN 70	M		O					
209-58015- 1		1	BX175	U							
209-58015- 2		1	BX175	U							
209-58016		1	BY253	U							
209-58017- 1		1	CG252	U							
209-58017- 2		1	CG252	U							
209-58018		1	DM 48								
209-58018- 1	357	1	BV304	U							
209-58018- 2	357	1	BV304	U							
209-58019		1	DK168	U							
209-58020		1		U							
209-58021		1	BV299	U							
209-58022		1		U							
209-58023- 1		2	BL416	U							
209-58023- 2		2	BL416	U							
209-58024		1	DM173	U							

PART NUMBER	FIGURE AND INDEX	TOTAL QTY.	MICRO-FILM NUMBER	MAINTENANCE CODE DATA: SOURCE CODE	INST'L CAPABILITY	PRI-INST'L CAPABILITY	RECOVERABILITY	SUPPORT EQUIPMENT	COGNIZANCE CODE	FEDERAL STOCK NUMBER DATA: FEDERAL STOCK NUMBER	MFG. CODE (TSMC)
209-58027	154 - 67	1									
209-58027- 1	157	1		P1	F	O	R		R	1650-534-4258	ANAA
209-58027- 2	157	1		P1	F	O	R		R	1650-534-4259	ANAA
209-58029- 1	168 - 6	1	BL418	P1	F	O	R		R	1650-323-4834	ANAA
209-58029- 2	168	1	BL418	P1	F	O	R		R	1650-323-4835	ANAA
209-58030	164 -101 165 - 94 167	2	BX 29	P1	F	O	R		R	1650-333-7974	ANAA
209-58031	166	2	BW127	P1	F	O	R		R	1600-CDO-2395	ANAA
209-58031- 1		1	BW127								
209-58031- 2		1	BW127								
209-58032	127	2									
209-58034- 1	143 - 17	1	BL419	P1	F	O	R		R	1650-037-2925	ANAA
209-58034- 2	143 - 18	1	BL419	P1	F	O	R		R	1650-037-2926	ANAA
209-58037- 1	145	1	BW 27	P1	F	O	R		R	1650-612-7286	ANAA
209-58037- 2	145	1	BW 27	P1	F	O	R		R	1650-612-7287	ANAA
209-58038	143 - 51 146	2	BW 35	P1	F	O	R		R	1650-037-2927	ANAA
209-58041	161 - 5	2	BL420	P1	F	O	S		R	1650-341-4732	ANAA
209-58042	147	2	BL421	P1	F	O	R		R	1650-037-2928	ANAA
209-58043- 1	141 - 45	1	CC 78	P1	F	O	R		R	1650-612-7288	ANAA
209-58043- 2	141 - 46	1	CC 78	P1	F	O	R		R	1650-612-7289	ANAA
209-58043- 3	141 - 62	1	CC 78								
209-58044		1	DR160								
209-58054		1	DG280								
209-58056	148 - 10	1	BL422	M		O					
209-58065		1	DP 45								
209-58065- 1		1		U							
209-58065- 2		1		U							
209-58101- 3		1	BW158	X1							
209-58101- 4		1	BW158	X1							
209-58101- 11	143 - 21	1	BW158	P1	F	O	S		R	1650-037-2929	ANAA
209-58101- 12	143	1	BW158	P1	F	O	S		R	1650-037-2930	ANAA
209-58102	143 - 40	1	BW184								
209-58102- 9		2	BW184	X2							
209-58103	143 - 30	2	BL423	P	F	O	S		R	1650-037-2931	ANAA
209-58104	143 - 27	2	BL424	P	F	O	S		R	1650-037-2932	ANAA
209-58104- 3		2	BL424	M		O					
209-58105- 3	161 - 16	2	AL 55	X1							
209-58106	161 - 17	2	BL428	M		O			R	1650-575-5313	ANAA
209-58107	161 - 21	2	BL428	M		O					
209-58108	161 - 7	2	BH270	M		O					
209-58109- 1	43 - 97	1	BB 90	M		O					
209-58109- 3		2	BB 90	M		O					
209-58109- 6		1	BB 90	M		O					
209-58109- 12	43	1	BB 90	M		O					
209-58110	142 - 28	2	BL426	X1					R	1650-697-3723	ANAA
209-58115- 3		1	BX 25	X1							
209-58115- 4		1	BX 25	X1							
209-58115- 11	145 - 11	1	BX 25	P1	F	O	S		R	1650-697-3724	ANAA
209-58115- 12	145	1	BX 25	P1	F	O	S		R	1650-697-3725	ANAA
209-58116	145 - 19	2	BW173	P1	F	O	S		R	1650-569-9403	ANAA
209-58117	145 - 16	2	BL427	P1	F	O	S		R	1650-305-4481	ANAA
209-58118		1	BL429								
209-58118- 3		2	BL429	X1							
209-58118- 11	145 - 6	2	BL429	P1	F	O	S		R	1650-612-7290	ANAA
209-58122	123 - 7 136 - 6 355 PG. 1020 PG. 1027	2	BH271	P	F	O	S		R	1560-570-2320	ANAA
209-58124	146 - 21	2	BL430	P1	F	O	S		R	1650-532-0233	ANAA
209-58125- 3		2	BW151	X1							
209-58125- 5	146 - 12	2	BW151	X1							
209-58126	146 - 11	2	BH272	P1	F	O	S		R	1650-532-0234	ANAA
209-58127	146 - 1	2	BE 61	P1	F	O	S		R	5340-569-9406	ANAA
209-58129		4	BE 62	M		O					
209-58131- 3		2	BV294	X1							
209-58131- 11	147 - 17	2	BU294	P1	F	O	S		R	1650-037-2933	ANAA
209-58132- 3	147 - 21	2	BW115	X2							
209-58133	147 - 8	2	BL431	P1	F	O	S		R	1650-037-2934	ANAA
209-58134- 3		2	BL432	X1							
209-58134- 11	147 - 5	2	BL432	P1	F	O	S		R	1650-612-7292	ANAA
209-58136- 1	141 - 88	2	BX 18	P1	F	O	S		R	1650-569-9407	ANAA
209-58136- 2	141	1	BX 18	P1	F	O	S		R	1650-569-9408	ANAA
209-58136- 3		1	BX 18	X1							
209-58136- 4		1	BX 18	X1							
209-58139	141 - 50	2	BL433	P1	F	O	S		R	1650-532-0239	ANAA
209-58140	141 - 63	2	BH273	P1	F	O	S		R	1650-305-4482	ANAA
209-58141	141 - 47	2	BH274	P1	F	O	S		R	1650-531-7363	ANAA
209-58143	141 - 61	2	BE 63	M		O					
209-58144	167 - 18	2	DM 84	P1	F	O	S		R	1650-333-7975	ANAA
209-58145	167 - 19	1									
209-58146	164 - 99 165 - 92 357	2	BE 65	M		O					
209-58147	167 - 15	2	BL435	P1	F	O	S		R	1560-338-1079	ANAA
209-58148	167 - 23	2	BL436	P1	F	O	S		R	1650-532-0240	ANAA
209-58148- 3		2	BL436	X1							
209-58149	167 - 1	2	BU124	P1	F	O	S		R	1650-333-7976	ANAA
209-58149- 3		2	BU124	X1							
209-58149- 5		2	BU124	X1							
209-58150	167 - 6	2	BM275	M		O					
209-58152- 3		1	BW160						R	1650-031-5644	ANAA
209-58152- 4		1	BW160						R	1650-031-5645	ANAA
209-58153- 3	168 - 16	2	BW 64	P1	F	O	S		R	1650-569-9411	ANAA
209-58154	168 - 20	2	BL438	P	F	O	S		R	1650-031-5646	ANAA
209-58155- 3		2	BL439	M		O					
209-58155- 11	168 - 12	2	BL409	P1	F	O	S		R	1650-031-5647	ANAA
209-58156- 3		1		X1							
209-58156- 11	168 - 7	2		P1	F	O	S		R	1650-697-3726	ANAA
209-58164- 3		2	BW 24	X1							
209-58164- 11	166 - 25	2	BW 24	P1	F	O	S		R	1650-031-5651	ANAA
209-58165	166 - 21	2	BW179	P1	F	O	S		R	1650-569-9412	ANAA
209-58166	166 - 11	2	BL440	P1	F	O	S		R	1650-612-7293	ANAA

PART NUMBER	FIGURE AND INDEX	TOTAL QTY.	MICRO-FILM NUMBER	MAINTENANCE CODE DATA: SOURCE CODE	INST'L CAPABILITY	PRE-INST'L CAPABILITY	RECOVERABILITY	SUPPORT EQUIPMENT	COGNIZANCE CODE	FEDERAL STOCK NUMBER DATA: FEDERAL STOCK NUMBER	MFG. CODE (TSMC)
209-58167- 3		2	BL441	X1							
209-58167- 11	166 - 6	2	BL441	P1	F	O	S		R	1600-COD-2403	ANAA
209-58172		2	BH276	M		O					
209-58173	164	2	BE 66	M		O					
	357										
209-58174- 3	164 -107	2	BH277	M		F					
	357										
209-58174- 5	164 -108	2	BH277	M		F					
	357										
209-58174- 7	164 -122	2	BH277	M		F					
	357										
209-58175- 1		1	BL442	M		O					
209-58175- 2		1	BL442	M		O					
209-58186- 1		1									
209-58194	157 - 13	2		P1	F	O	S		R	1650-534-4260	ANAA
209-58196- 3		1		X1							
209-58196- 4		1		X1							
209-58196- 11	157 - 2	1		P1	F	O	S		R	1650-534-4261	ANAA
209-58196- 12	157 - 3	1		P1	F	O	S		R	1650-534-4262	ANAA
209-58197	157 - 16	2	DG 51	X1							
209-58198- 3		2	DN 48	X1							
209-58198- 11	157 - 8	2	DN 48	P1	F	O	S		R	1650-570-2321	ANAA
209-58201- 3	190 - 1	1	BH278	M		O					
209-58201- 5	190	1	BH278	M		O					
209-58203- 3		2	CY 54	M		O					
209-58203- 5		1	CY 54	M		O					
209-58203- 7		2	CY 54	M		O					
209-58203- 11		3	CY 54	M		O					
209-58203- 13		1	CY 54	M		O					
209-58203- 15		1	CY 54	M		O					
209-58203- 17		2	CY 54	M		O					
209-58203- 19		1	CY 54	M		O					
209-58203- 21		1	CY 54	M		O					
209-58203- 23	44 - 82	1	CY 54	M		O					
209-58203- 25	44	1	CY 54	M		O					
209-58203- 27		2	CY 54	M		O					
209-58203- 29		1	CY 54	M		O					
209-58203- 31		1	CY 54	M		O					
209-58203- 33		1	CY 54	M		O					
209-58203- 35		1	CY 54	M		O					
209-58203- 39		1	CY 54	M		O					
209-58203- 41		1	CY 54	M		O					
209-58203- 43		1	CY 54	M		O					
209-58203- 45		1	CY 54	M		O					
209-58203- 47		1	CY 54	M		O					
209-58203- 49		1	CY 54	M		O					
209-58203- 51		1	CY 54	M		O					
209-58203- 53		1	CY 54	M		O					
209-58203- 55	358	1	CY 54	M		O					
209-58203- 57		1	CY 54	M		O					
209-58205	200 - 95	1	BL443	M		O					
209-58205- 3		1	BL443	M		O					
209-58205- 5		1	BL443	M		O					
209-58205- 7		1	BL443	M		O					
209-58205- 8		1	BL443	M		O					
209-58206		1	BL444	M		O					
209-58206- 3		1	BL444	M		O					
209-58209	127 -115	1	CY 14	M		O					
209-58209- 3		1	CY 14	M		O					
209-58209- 5		1	CY 14	M		O					
209-58209- 7		1	CY 14	M		O					
209-58209- 9		1	CY 14	M		O					
209-58209- 11		1	CY 14	M		O					
209-58209- 13		1	CY 14	M		O					
209-58209- 15		1	CY 14	M		O					
209-58209- 21	127	1	CY 14	M		O					
209-58210	124 -125	1	BW123	M		O					
209-58210- 3		1	BW123	M		O					
209-58210- 5		1	BW123	M		O					
209-58210- 7		1	BW123	M		O					
209-58210- 9		1	BW123	M		O					
209-58210- 11	124 -126	1	BW123	M		O					
209-58210- 21	124	1	BW123	M		O					
209-58211		1	BL445	M		O					
209-58211- 3		1	BL445	M		O					
209-58211- 5		1	BL445	M		O					
209-58211- 7		1	BL445	M		O					
209-58211- 9		1	BL445	M		O					
209-58212		1	DR216	M		O					
209-58212- 3		1	BL446	M		O					
209-58212- 5		1	BL446	M		O					
209-58212- 9		1	BL446	M		O					
209-58215		3	BH282	M		O					
209-58215- 3		3	BH282	M		O					
209-58215- 5		3	BH282	M		O					
209-58215- 7		3	BH282	M		O					
209-58215- 9		3	BH282	M		O					
209-58216		4	BH283	M		O					
209-58216- 3		4	BH283	M		O					
209-58216- 5		4	BH283	M		O					
209-58216- 7		4	BH283	M		O					
209-58216- 9		4	BH283	M		O					
209-58217	44 - 28	1	BH284	M		O					
209-58218- 1		1	BL447	M		O					
209-58218- 2		1	BL447	M		O					
209-58218- 3		1	BL447	M		O					
209-58218- 4		1	BL447	M		O					
209-58219- 1		1	BH285	M		O					
209-58219- 2		1	BH285	M		O					
209-58219- 3		1	BH285	M		O					
209-58219- 4		1	BH285	M		O					
209-58222- 1		1	BH286	M		O					
209-58222- 2		1	BH286	M		O					
209-58222- 11		1	BH286	M		O					
209-58222- 12		1	BH286	M		O					

PART NUMBER	FIGURE AND INDEX	TOTAL QTY.	MICRO-FILM NUMBER	MAINTENANCE CODE DATA: SOURCE CODE	INST'L CAPABILITY	PRE-INST'L CAPABILITY	RECOVERABILITY	SUPPORT EQUIPMENT	COGNIZANCE CODE	FEDERAL STOCK NUMBER DATA: FEDERAL STOCK NUMBER	MFG. CODE (TSMC)
209-58223- 1		1	BH287	M		O					
209-58223- 2		1	BH287	M		O					
209-58224		1	BH288	M		O					
209-58225		1	BW144	M		O					
209-58225- 3		1	BW144	M		O					
209-58225- 5		1	BW144	M		O					
209-58225- 7		1	BW144	M		O					
209-58225- 9		1	BW144	M		O					
209-58225- 11		1	BW144	M		O					
209-58228		2	CA 37	M		O					
209-58228- 3		2	CA 37	M		O					
209-58228- 5		2	CA 37	M		O					
209-58229		1	BH289	P1	F	O	C		R	1560-031-5161	ANAA
	143 - 56	1									
209-58230- 3		1		M		O					
209-58230- 4		1		M		O					
209-58231		6	BH290								
209-58232		1	BH291	M		O					
209-58232- 3		1	BH291	M		O					
209-58234		1	BH292	M		O					
209-58234- 3		1	BH292	M		O					
209-58238- 3		2	CP 92	M		O					
209-58239		5	BH293	M		O					
209-58239- 3		3	BH293	M		O					
209-58239- 5		3	BH293	M		O					
209-58239- 7		3	BH293	M		O					
209-58240		1	BH294	M		O					
209-58240- 3		1	BH294	M		O					
209-58240- 5		1	BH294	M		O					
209-58240- 7		1	BH294	M		O					
209-58241		1	BH295	M		O					
209-58241- 3		1	BH295	M		O					
209-58241- 5		1	BH295	M		O					
209-58241- 7		1	BH295	M		O					
209-58243		1	BH296	M		O					
209-58243- 3		1	BH296	M		O					
209-58243- 5		1	BH296	M		O					
209-58243- 7		1	BH296	M		O					
209-58244		1	BH297	M		O					
209-58245		1		M		O					
209-58246- 3		1	BE 70	M		O					
209-58246- 5		1	BE 70	M		O					
209-58247		1	BL452	M		O					
209-58247- 3		1	BL452	M		O					
209-58247- 5		2	BL452	M		O					
209-58247- 11		1	BL452	M		O					
209-58248		1	BE 71	M		O					
209-58249	124	4	BE 72	M		O					
	126										
	127										
209-58249- 3		4	BE 72	M		O					
209-58249- 5		4	BE 72	M		F					
209-58250		1	BH298	M		O					
209-58250- 3		1	BH298	M		O					
209-58250- 5		1	BH298	M		O					
209-58251	122 -102	10	BU 66	P1	F	O	C		R	1560-511-2451	ANAA
209-58252		10	BU 67	M		O					
209-58252- 3		10	BU 67	M		O					
209-58252- 5		10	BU 67	M		O					
209-58253	122 -103	2	BU 68	P1	F	O	C		R	1560-511-2467	ANAA
209-58254		2	BU 69	M		O					
209-58254- 3		6	BU 69	M		O					
209-58254- 5		6	BU 69	M		O					
209-58255- 1		1	BY141	M		O					
209-58255- 2		1	BY141	M		O					
209-58256- 3		2	DN270	M		F					
209-58256- 4		2	DN270	M		F					
209-58256- 5		2	DN270	M		F					
209-58256- 6		2	DN270	M		F					
209-58256- 7		1	DN270	M		F					
209-58256- 8		1	DN270	M		F					
209-58256- 9		2	DN270	M		F					
209-58256- 10		2	DN270	M		F					
209-58256- 11		1	DN270	M		F					
209-58256- 12		1	DN270	M		F					
209-58256- 13		1	DN270	M		F					
209-58256- 14		1	DN270	M	F						
209-58256- 15		1	DN270	M		F					
209-58256- 16		1	DN270	M		F					
209-58256- 17		2	DN270	M		F					
209-58256- 18		2	DN270	M		F					
209-58256- 31		2	DN270	M		F					
209-58256- 32		2	DN270	M		F					
209-58256- 41		2	DN270	M		F					
209-58256- 42		2	DN270	M		F					
209-58256- 51		1	DN270	M		F					
209-58256- 52		1	DN270	M		F					
209-58256- 61		2	DN270	M		F					
209-58256- 62		2	DN270	M		F					
209-58256- 71		1	DN270	M		F					
209-58256- 72		1	DN270	M		F					
209-58256- 81		1	DN270	M		F					
209-58256- 82		1	DN270	M		F					
209-58256- 91		1	DN270	M		F					
209-58256- 92		1	DN270	M		F					
209-58256-101		2	DN270	M		F					
209-58256-102		2	DN270	M		F					
209-58256-111		5	DN270	M		F					
209-58256-112		3	DN270	M		F					
209-58257		2	BH304	M		O					
209-58259		1	BH305	M		O					
209-58260		1	BW147	M		O					
209-58260- 3		1	BW147	M		O					
209-58260- 5		1	BW147	M		O					
209-58260- 7		1	BW147	M		O					

PART NUMBER	FIGURE AND INDEX	TOTAL QTY.	MICRO-FILM NUMBER	MAINTENANCE CODE DATA: SOURCE CODE	INSTL CAPABILITY	PRE-INSTL CAPABILITY	RECOVERABILITY	SUPPORT EQUIPMENT	COGNIZANCE CODE	FEDERAL STOCK NUMBER DATA: FEDERAL STOCK NUMBER	MFG. CODE (TSMC)
209-58260- 9		1	BW147	M		0					
209-58261		1	BL454	M		0					
209-58261- 3		1	BL454	M		0					
209-58261- 5		1	BL454	M		0					
209-58261- 7		1	BL454	M		0					
209-58262		1	BL455	M		0					
209-58262- 3		1	BL455	M		0					
209-58265- 1		1	BE 74	M		0					
209-58265- 2		1	BE 74	M		0					
209-58266		1	BM334	M		0					
209-58269		1	BL456	M		0					
209-58269- 3	358	1	BL456	M		0					
209-58272	134 -127	REF									
	135 -117	1									
	163 -117	1									
		1	BH306	P1	F	0	C		R	1560-031-5161	ANAA
209-58273		1	BL457	M		0					
209-58273- 3		1	BL457	M		0					
209-58274		1	BL458	M		0					
209-58274- 3		1	BL458	M		0					
209-58274- 5		1	BL458	M		0					
209-58275		1	BL459	M		0					
209-58275- 3		1	BL459	M		0					
209-58275- 5		1	BL459	M		0					
209-58276		1	BH307	M		F					
209-58277		1	BH308	M		0					
209-58277- 3		1	BH308	M		0					
209-58278		1	BL460	M		0					
209-58278- 3		1	BL460	M		0					
209-58279		2	BX 26	M		0					
209-58279- 3		1	BX 26	M		0					
209-58279- 5		1	BX 26	M		0					
209-58280		1	BL461	M		0					
209-58280- 3		1	BL461	M		0					
209-58281	200 - 48	1	BL462	M		0					
209-58281- 3		1	BL462	M		0					
209-58282		1	BE 76	M		0					
209-58283		1	BL463	M		0					
209-58284		1	BH309	M		0					
209-58285		1	CU224	M		0					
209-58285- 3		1	CU224	M		0					
209-58285- 5		1	CU224	M		0					
209-58285- 11		1	CU224	M		0					
209-58286		1	BH310	M		0					
209-58287		1	BW181	M		0					
209-58287- 3		1	BW181	M		0					
209-58287- 5		1	BW181	M		0					
209-58287- 7		1	BW181	M		0					
209-58288		1	BL465	M		0					
209-58288- 3		1	BL465	M		0					
209-58288- 5		1	BL465	M		0					
209-58289		1	BL466	M		0					
209-58289- 3		1	BL466	M		0					
209-58290		1	BL467	M		0					
209-58291		1	BH311	M		0					
209-58291- 3		1	BH311	M		0					
209-58292		2	BH312	M		0					
209-58293		1	BL468	M		0					
209-58293- 3		1	BL468	M		0					
209-58293- 5		1	BL468	M		0					
209-58293- 7		1	BL468	M		0					
209-58294		1	CX167	M		0					
209-58294- 3		1	CX167	M		0					
209-58294- 5		1	CX167	M		0					
209-58294- 7		1	CX167	M		0					
209-58294- 9		1	CX167	M		0					
209-58294- 11		1	CX167	M		0					
209-58294- 13		1	CX167	M		0					
209-58294- 15		1	CX167	M		0					
209-58294- 17		1	CX167	M		0					
209-58294- 21		1	CX167	M		0					
209-58295		1	BH313	M		0					
209-58295- 3		1	BH313	M		0					
209-58296- 1	122 - 79	1	BU192	M		0					
209-58296- 2	136 - 70	1	BU192	M		0					
209-58296- 3		2	BU192	M		0					
209-58296- 5		1	BU192	M		0					
209-58296- 6		1	BU192	M		0					
209-58296- 7		2	BU192	M		0					
209-58296- 9		2	BU192	M		0					
209-58296- 13		1	BU192	M		0					
209-58296- 14		1	BU192	M		0					
209-58296-101	93 -152	1	BU192	M		0					
	122										
	129 -137										
209-58296-102	93 -153	1	BU192	M		0					
	136										
	137 - 76										
209-58296-103		2	BU192	M		0					
209-58296-104		2	BU192	M		0					
209-58296-107		1	BU192	M		0					
209-58296-109		1	BU192	M		0					
209-58296-116		1	BU192	M		0					
209-58297		1	BL469	M		0					
209-58297- 3		1	BL469	M		0					
209-58298		1									
209-58298- 3		1									
209-58299- 1		1	BL470	M		0					
209-58299- 2		1	BL470	M		0					
209-58300- 3	141 - 78	4	DL147	P	F	0	C		R	5306-550-1276	ANAA
209-58300- 5		2	DL147								
209-58300- 7	141 - 77	2	DL147	P	F	0	C		R	5306-550-1275	ANAA
209-58301	141	2	BH314	M		0					
209-58302	124	4	BH315	M		0					
	126										

PART NUMBER	FIGURE AND INDEX	TOTAL QTY.	MICRO-FILM NUMBER	MAINTENANCE CODE DATA: SOURCE CODE	INSTL CAPABILITY	PRE-INSTL CAPABILITY	RECOVERABILITY	SUPPORT EQUIPMENT	COGNIZANCE CODE	FEDERAL STOCK NUMBER DATA: FEDERAL STOCK NUMBER	MFG. CODE (TSMC)
209-58302- 3		4	BH315	M		0					
209-58302- 5		4	BH315	M		0					
209-58303		1	BE 77	M		0					
209-58304	47 - 48	1	BH316	M		0					
209-58305- 3	47 - 49	1	BH317	M		0					
209-58305- 5	47 - 50	1	BH317	M		0					
209-58306		1	BH318	M		0					
209-58307	44 - 54	1	BH319	M		0					
209-58308		1	BE 78	M		0					
209-58309- 1		1	BH320	M		0					
209-58309- 2		1	BH320	M		0					
209-58311		2	BE 79	M		0					
209-58312		1	BH321	M		0					
209-58313		1	BH322	M		0					
209-58313- 3		1	BH322	M		0					
209-58314		1	BM 24	M		0					
209-58314- 3		1	BM 24	M		0					
209-58314- 5		1	BM 24	M		0					
209-58314J	338 - 95	1									
209-58315		1	CY 53	M		0					
209-58317		2	BH324	M		0					
209-58318		1	BH325	M		0					
209-58318- 3		1	BH325	M		0					
209-58319	135 - 1	1	CY 37	M		0					
209-58319- 3		1	CY 37	M		0					
209-58319- 5		1	CY 37	M		0					
209-58320- 1		1	BM 26	M		0					
209-58320- 2		1	BM 26	M		0					
209-58320- 3		1	BM 26	M		0					
209-58320- 4		1	BM 26	M		0					
209-58320- 5		1	BM 26	M		0					
209-58320- 6		1	BM 26	M		0					
209-58320- 7		2	BM 26	M		0					
209-58320- 9		1	BM 26	M		0					
209-58320- 11		1	BM 26	M		0					
209-58321- 1		1	BH326	M		0					
209-58321- 2		1	BH326	M		0					
209-58322	23 - 54	2	BH327	M		0					
209-58324		4	BE 80	M		0					
209-58325		1	BH328	M		F					
209-58325- 3		1	BH328	M		F					
209-58326- 3		1	DH 98	M		F					
209-58326- 5		1	DH 98	M		F					
209-58327- 1		2	BH330	M		0					
209-58327- 2		2	BH330	M		0					
209-58328		2	BH332	M		0					
209-58329		2	CP137	M		0					
209-58330- 1		1	BV193	M		0					
209-58330- 2		1	BV193	M		0					
209-58330- 3		1	BV195	M		0					
209-58330- 4		1	BV195	M		0					
209-58330- 5		1	BV193	M		0					
209-58330- 6		1	BV193	M		0					
209-58330- 7		2	BV195	M		0					
209-58331		1	BM 27	M		0					
209-58331- 3		1	BM 27	M		0					
209-58332		1	BM 28	M		0					
209-58332- 5		1	BM 28	M		0					
209-58333	129-130	1		P1	F	0	C		R	1560-510-1150	ANAA
	163 -118										
209-58334		1	BE349	M		0					
209-58337		1		M		0					
209-58337- 3		1		M		0					
209-58338- 3		1	DH 99	M		0					
209-58338- 5		1	DH 99								
209-58338- 7		1	DH 99	M		0					
209-58338- 9		1	DH 99	M		0					
209-58339- 3	122 -103	2	DH100	P1	F	0	C		R	1560-511-2470	ANAA
	123 -174										
209-58339- 5	122 -104	2	DH100	P1	F	0	C		R	1560-511-2477	ANAA
	123 -175										
209-58340- 1	122 -105	1	DH101	P1	F	0	C		R	1560-570-2322	ANAA
	123 -172										
209-58340- 2	122 -106	1	DH101	P	F	0	C		R	1560-569-9085	ANAA
	123 -173										
209-58341- 3		1	DN273	M		F					
209-58341- 4		1	DN273	M		F					
209-58341- 5		1	DN273	M		F					
209-58341- 6		1	DN273	M		F					
209-58341- 7		1	DN273	M		F					
209-58341- 8		1	DN273	M		F					
209-58341- 9		1	DN273	M		F					
209-58341- 10		1	DN273	M		F					
209-58341- 11		1	DN273	M		F					
209-58341- 12		1	DN273	M		F					
209-58341- 13		1	DN273	M		F					
209-58341- 14		1	DN273	M		F					
209-58341- 15		1	DN273	M		F					
209-58341- 16		1	DN273	M		F					
209-58341- 17		1	DN273	M		F					
209-58341- 18		1	DN273	M		F					
209-58341- 19		1	DN273	M		F					
209-58341- 20		1	DN273	M		F					
209-58341- 31		1	DN273	M		0					
209-58341- 32		1	DN273	M		F					
209-58341- 41		1	DN273	M		F					
209-58341- 42		1	DN273	M		F					
209-58341- 51		1	DN273	M		F					
209-58341- 52		1	DN273	M		F					
209-58341- 61		1	DN273	M		F					
209-58341- 62		1	DN273	M		F					
209-58341- 71		1	DN273	M		F					
209-58341- 72		1	DN273	M		F					
209-58341- 81		1	DN273	M		F					
209-58341- 82		1	DN273	M		F					

PART NUMBER	FIGURE AND INDEX	TOTAL QTY.	MICRO-FILM NUMBER	MAINTENANCE CODE DATA: SOURCE CODE	INST'L CAPABILITY	PRE-INST'L CAPABILITY	RECOVERABILITY	SUPPORT EQUIPMENT	FEDERAL STOCK NUMBER DATA: COGNIZANCE CODE	FEDERAL STOCK NUMBER	MFG. CODE (TSMC)
209-58341- 91		1	DN273	M		F					
209-58341- 92		1	DN273	M		F					
209-58341-101		1	DN273	M		F					
209-58341-102		1	DN273	M		F					
209-58341-111		1	DN273	M		F					
209-58341-112		1	DN273	M		F					
209-58342- 3		2	DH 85	M		O					
209-58342- 5		2	DH 85	M		O					
209-58342- 7		2	DH 85	M		O					
209-58342- 9		2	DH 85	M		O					
209-58342- 11		2	DH 85	M		O					
209-58342- 13		2	DH 85	M		O					
209-58342- 17		8	DH 85	M		O					
209-58342- 19		8	DH 85	M		O					
209-58342- 21		2	DH 85	M		O					
209-58342- 23		2	DH 85	M		O					
209-58342- 31		2	DH 85	M		O					
209-58342- 41		2	DH 85	M		O					
209-58342- 51		2	DH 85	M		O					
209-58342- 61		2	DH 85	M		O					
209-58342- 71		2	DH 85	M		O					
209-58342- 81		2	DH 85	M		O					
209-58343- 1		1	DH102	M		O					
209-58343- 2		1	DH102	M		O					
209-58343- 3		1	DH102	M		O					
209-58343- 4		1	DH102	M		O					
209-58343- 5		2	DH102	M		O					
209-58343- 7		2	DH102	M		O					
209-58343- 9		2	DH102	M		O					
209-58344- 1		2	CE 75	M		O					
209-58344- 2		2	CE 75	M		O					
209-58345		2	DH109	M		O					
209-58346		1	BU107	M		F					
209-58347		1	BU106	M		F					
209-58350- 1		1	DH104	M		O					
209-58350- 2		1	DH104	M		O					
209-58350- 3		1	DH104	M		O					
209-58350- 4		1	DH104	M		O					
209-58351		1	BU217	M		F					
209-58352		1		M		O					
209-58353	90 - 7	1		M		O					
209-58354		1	CB 10	M		O					
209-58354- 3		1	CB 10	M		O					
209-58355		1		M		O					
209-58355- 3		1		M		O					
209-58356- 1		1		M		O					
209-58356- 2		1		M		O					
209-58356- 3		1		M		O					
209-58356- 4		1		M		O					
209-58358	134 - 1	1	DP241	M		O					
209-58358- 3		1	DP241	M		O					
209-58358- 5		1	DP241	M		O					
209-58359	88 - 56	10	J 34M		O						
209-58362		1		M		O					
209-58363		1		M		O					
209-58363- 3		1		M		O					
209-58363- 5		1		M		O					
209-58363- 7		1		M		O					
209-58364- 3		2		M		O					
209-58364- 5		2		M		O					
209-58365		1	DP145	M		O					
209-58366- 3		1	DM 67						R	1560-571-5499	ANAA
209-58366- 5		1	DM 67						R	1560-571-5500	ANAA
209-58367- 3		1	DH107	M		O					
209-58367- 4		1	DH107	M		O					
209-58367- 5		1	DH107	M		O					
209-58367- 7		1	DH107	M		O					
209-58367- 9		1	DH107	M		O					
209-58367- 11		1	DH107	M		O					
209-58367- 13		1	DH107	M		O					
209-58367- 15		1	DH107	M		O					
209-58367- 31		1	DH107	M		O					
209-58367- 41		1	DH107	M		O					
209-58367- 51		1	DH107	M		O					
209-58367- 61		1	DH107	M		O					
209-58367- 71		1	DH107	M		O					
209-58367- 81		1	DH107	M		O					
209-58368- 1		1	DH108						R	1560-571-5501	ANAA
209-58368- 2		1	DH108						R	1560-571-5502	ANAA
209-58369- 1		1	DH109	M		O					
209-58369- 2		1	DH109	M		O					
209-58369- 3		1	DH109	M		O					
209-58369- 5		2	DH109	M		O					
209-58370- 3	23 - 55	2	DR 98	M		O					
209-58370- 5		1	DR 98	M		O					
209-58371		2	DR 53	M		O					
209-58401- 3	122 - 9	2	CV 89	M		F					
	123 - 7										
	358										
	PG. 1020										
	PG. 1026										
209-58401- 5	125 - 15	2	CV 89	M		F					
	355										
	358										
	PG. 1020										
	PG. 1026										
209-58401- 7	358	1	CV 89	M		F					
209-58401- 9	358	1	CV 89	M		F					
209-58401- 11	122 - 13	1	CV 89	M		F					
	123 - 11										
	355										
	PG. 1019										
	PG. 1026										
209-58401- 13	125 - 12	1	CV 89	M		F					
	355										
	PG. 1019										
	PG. 1026										
209-58401- 15	122 - 16	1	CV 89	M		F					
	123 - 14										
	355										
	PG. 1020										
	PG. 1026										
209-58401- 17	125 - 9	1	CV 89	M		F					
	355										
	PG. 1020										
	PG. 1026										
209-58402		2	BM 30	M		O					
209-58402- 3		2	BM 30	M		O					
209-58403		1	BM 31	M		O					
209-58403- 3		1	BM 31	M		O					
209-58404		1	BM 32	M		O					
209-58404- 3		1	BM 32	M		O					
209-58406		1	BM 33	M		O					
209-58409		1	BM 34	M		O					
209-58409- 3		1	BM 34	M		O					
209-58410		1	BH334	M		O					
209-58426		1	BM 35	M		O					
209-58426- 3		1	BM 35	M		O					
209-58428	124 -113	2		M		O					
209-58601	134 - 21	1	BM 36	A		F					
	135 - 18										
	141 - 1										
	143 - 79										
209-58602	134 - 8	1	BJ 84	A		F					
	135 - 7										
	164 - 1										
	165 - 1										
209-58604	134 - 56	1	CV 92	A		F					
	135 - 35										
	162 - 1										
	203 -103										
209-58606	134 - 53	1	CV 88	A		F					
	135 - 38										
	153										
	154										
209-58608	134 -124	1		A		F					
	135										
	150										
209-58609- 11	164 - 51	1	BH335	A		F					
209-58609- 12	164	1	BH335	A		F					
209-58609- 21	164 - 52	1	BH335	A		F					
	165 - 52										
209-58609- 22	164	1	BH335	A		F					
	165										
209-58610	134 - 51	1	CV 90	A		F					
	135 - 39										
	153										
	154										
	197 - 82										
	198 - 86										
209-58611	123 - 83	1		A		F					
209-58612	134 - 22	1	BX 87	A		F					
	138 - 19										
	141 - 17										
	200 - 82										
209-58613	126	1	BH336	A		F					
	127										
209-58613- 13	127	1	BH336	A		F					
209-58614- 1		1	BU218	A		F					
	125 -118	1									
209-58614- 2		1	BU218	A		F					
	125 -119	1									
209-58615	164	2	BH338	A		F					
	357										
209-58616	164	1	BH339	A		F					
	165										
209-58617	134 - 36	1		A		F					
209-58618	134	1	DH110	A		F					
209-58619	124	1	BH340	A		F					
209-58620	136 - 33	1	DK146	A		F					
	137 - 35										
209-58621	135 -104	1	BU 44	A		F					
	158										
209-58621- 11	134 -119	1	BU 44								
	135 - 90										
	159										
209-58622	150	1	BM 40	A		F					
	151										
209-58622- 10	150 - 26	1	BM 40	A		F					
209-58623	126 - 48	1	BH342	A		F					
209-58623- 11	127 - 51	1	BH342	A		F					
209-58624	124	1	BH343	A		F					
209-58625	134 - 66	1	BM 41	A		F					
	135										
	139										
209-58626	135 - 54	1	BB 91	A		F					
	139										
209-58626- 11	135	1	BB 91	A		F					
	139										
209-58627- 1	157	1		A		F					
209-58627- 2	157	1		A		F					
209-58629	164 - 47	1	BM 42								
	165 - 64										
209-58629- 1	168	1	BM 42	A		F					
209-58629- 2	168	1	BM 42								
209-58629- 11		1	BM 42								
209-58631	164 -124	2	BM 43								
209-58631- 1	166	1	BM 43	A		F					
209-58631- 2	166	1	BM 43	A		F					
209-58632- 2		1		A		F					

PART NUMBER	FIGURE AND INDEX	TOTAL QTY.	MICRO-FILM NUMBER	MAINTENANCE CODE DATA: SOURCE CODE	INSTL CAPABILITY	PRE-INSTL CAPABILITY	RECOVERABILITY	SUPPORT EQUIPMENT	FEDERAL STOCK NUMBER DATA: COGNIZANCE CODE	FEDERAL STOCK NUMBER	MFG. CODE (TSMC)
209-58634- 1	143	1	BM 44	A		F					
209-58634- 2	143	1	BM 44	A		F					
209-58636- 1	142	1	BM 45	A		F					
209-58636- 2	142	1	BM 45	A		F					
209-58637	141 - 76	1	BM 46								
209-58637- 1	145	1	BM 46	A		F					
209-58637- 2	145	1	BM 46	A		F					
209-58640	158 - 30	1	BM 47								
	158 - 70										
	159 - 20	1									
	159 - 31	1									
209-58640- 1	36 - 30	1	BM 47	A		F					
	158										
209-58640- 2	36	1	BM 47	A		F					
	160										
209-58641	158 - 60	1	BY 69								
	158 - 76										
	159 - 51	1									
	159 - 56	1									
209-58641- 1	161	1	BY 69	A		F					
209-58641- 2	161	1	BY 69								
209-58642	143 - 44	1	BM 49								
209-58642- 1	147	1	BM 49	A		F					
209-58642- 2	147	1	BM 49	A		F					
209-58643- 1	141	1	BM 50	A		F					
209-58643- 2	141	1	BM 50	A		F					
209-58644		1	DR182								
209-58645	137 - 4	1	DK 89								
	137 - 17										
	355										
	PG. 1020										
	PG. 1026										
209-58646	126	1	CU 50	A		F					
	127										
209-58647	124	1	CU 47	A		F					
209-58648		1	DR134	A		F					
209-58649	124	1	BM 51	A		F					
209-58650		1	BP 47								
209-58650- 11	122 - 1	1	BP 47	A		F					
	355										
	PG. 1020										
	PG. 1026										
209-58650- 21	125 - 4	1	BP 47	A		F					
	355										
	PG. 1020										
	PG. 1026										
209-58650- 31	136 - 4	1	BP 47	A		F					
	136 - 17										
	355										
	PG. 1020										
	PG. 1027										
209-58651	136 - 17	1	BP 44	A		F					
	355										
	PG. 1020										
	PG. 1027										
209-58652	137 - 4	1	DM206								
	355										
	PG. 1021										
	PG. 1027										
209-58653	126 - 6	1									
	127 - 6	1									
	130										
209-58654	124 - 10	1	CP 55	A		F					
	130										
209-58656	143 - 6	1	BM 54	M		F					
	148										
209-58660- 11	135 -100	1	BM 55	A		F					
209-58660- 21	126 - 46	1	BM 55	A		F					
	127 - 46										
209-58660- 31	124 - 49	1	BM 55	A		F					
209-58663- 11	164 -104	2	BH346	A		F					
209-58663- 21	164 -105	1	BH346	A		F					
209-58663- 31	164	1	BH346	A		F					
209-58664- 3	123 - 46	2		A		F					
	125 - 39	1									
209-58664- 5	123	2		A		F					
	125 - 40	1									
209-58664- 8		1									
209-58665	123 - 66	1		A		F					
209-58666		1	BX 88	A		F					
	125 -127	1									
209-586661		1									
209-58667- 1		1	BX 89								
209-58667- 2		1	BX 89								
209-58667- 21	163	1	BX 89								
209-58667- 22	163	1	BX 89	A		F					
209-58671	126	1	BH347	A		F					
	127										
209-58672	126	1	BH348	A		F					
	127										
209-58675	125 - 28	1	CE 61	A		F					
209-58676	127	1		A		F					
209-58676- 11	127	1		A		F					
209-58677	124	1	BM349	A		F					
209-58678	124	1	BM350	A		F					
209-58679	122 - 32	1	DM153	A		F					
209-58679- 11	123 - 40	1	DM153								
209-58680		1	DL 64								
209-58683		1	DR135								
209-58686		1	DR 99								
209-58691	136 - 4	1									
209-58693		1	DR136								
209-58694	127 - 30	1	BM 59	A		F					
	132										
209-58695		1	DR137								

PART NUMBER	FIGURE AND INDEX	TOTAL QTY.	MICRO-FILM NUMBER	MAINTENANCE CODE DATA: SOURCE CODE	INSTL CAPABILITY	PRE-INSTL CAPABILITY	RECOVERABILITY	SUPPORT EQUIPMENT	FEDERAL STOCK NUMBER DATA: COGNIZANCE CODE	FEDERAL STOCK NUMBER	MFG. CODE (TSMC)
209-58696- 1	129	1	DP147								
209-58696- 2	129	1	DP147								
209-58698	124 - 30	1	BM 60	A		F					
	132										
209-58699		1	BX 19	A		F					
209-58704- 3	128	1	BW177	X1							
209-58704- 4	128	1	BW177	X1							
209-58704- 11	128 - 41	1	BW177	X2							
209-58704- 12	128	1	BW177								
209-58705	122 - 98	1	BY 44								
	123 -165										
	125 - 88	1									
	180 -184										
209-58705- 1		1	BY 44						R	1650-037-2935	ANAA
209-58705- 2		1	BY 44						R	1650-037-2936	ANAA
209-58705- 11		1	BY 44						R	1650-333-7977	ANAA
209-58705- 12		1	BY 44						R	1650-333-7978	ANAA
209-58705- 21	128	1	BY 44	P1	F	O	R		R	1650-508-6932	ANAA
209-58705- 22	128	1	BY 44	P1	F	O	R		R	1650-508-6933	ANAA
209-58706	122 - 50	1	BW142	P1	F	O	R		R	1650-031-5652	ANAA
	123 -108										
	125 - 60	1									
	131										
209-58706- 3	131	1	BW142	X1							
209-58707	128 - 22	2	BM 69	P1	F	O	S		R	1650-037-2937	ANAA
209-58708	122 - 97	2	BH351	P	F	O	S		R	5306-638-5556	ANAA
	123 -157										
	125 - 91	1									
209-58709	128 - 79	4	BE 81	M		O					
209-58710	128 - 13	2	BM 70	P1	F	O	S		R	1650-037-2938	ANAA
209-58711- 1	128 -107	1	BM 71	M		O					
209-58711- 2	128	1	BM 71	M		O					
209-58712	128 - 7	2	BN198	P1	F	O	S		R	1650-037-2939	ANAA
209-587125		1									
209-58713	180	1	CE 70	P	F	O	C				
209-58713- 3		2	CE 70	M		O					
209-587137- 3	155 - 56	1		A		F					
209-587137- 53	155	1		P1	F	O	S		R	1650-569-9413	ANAA
209-587137-103	155	1		P1	F	O	S		R	1650-532-0246	ANAA
209-58714	128 - 33	2	BM 73	P1	F	O	S		R	1650-037-2940	ANAA
209-58714- 3		2	BM 73	M		O					
209-58715	128 - 6	2	BH352	P	F	O	S		R	1650-037-2941	ANAA
209-587157	134 - 59	1	DH168						R	1650-532-0244	ANAA
	154 - 52										
	155										
	198 -116										
209-58716	128 - 36	2	BE 82	P	F	O	S		R	1650-037-2942	ANAA
209-587166	128 - 44	6	DL265	M		O					
	131 - 39										
	138 - 63										
	155 - 2										
209-587167	131 - 4	1		M		O					
209-587168		1	DH 55								
209-587168- 3		1	DH 55	X1							
209-587168- 11	155 - 1	1	DH 55	X1							
209-587169	155 - 21	1		M		O					
209-587169- 9		1		M		O					
209-58717- 3		2	BM 74	X1							
209-58717- 5	128 - 1	2	BM 74	P1	F	O	S		R	1650-037-2943	ANAA
209-587170	155 - 47	1		M		O					
209-587171	155 - 40	1		P1	F	O	S		R	1650-569-9415	ANAA
209-587172	155 - 46	1		M		O					
209-587173	155 - 70	1		P1	F	O	S		R	1650-569-9416	ANAA
209-587173- 3		1		X1							
209-587173- 5		1		X1							
209-587174	155 - 64	1		M		O					
209-587175	155 - 63	1		M		O					
209-587176	155 - 62	1		M		O					
209-587177	155 - 61	1	DJ179	M		O					
209-587178- 3		1		X1							
209-587178- 11	155 - 9	1		P1	F	O	S		R	1560-544-8573	ANAA
209-587179- 3	155 - 39	1	DG 30	M		O					
209-587179- 5	155 - 45	1	DG 30	M		O					
209-58718	128 - 35	2	DL 94	P1	F	O	S		R	5310-612-7294	ANAA
	155 - 6	1							R	1560-544-8574	ANAA
209-587181	92 - 45	1		A		F			R	1560-564-1491	ANAA
	188										
209-587182	188 - 87	1		P1					R	1560-564-1491	ANAA
209-587182- 3		1		X1							
209-587183	176 - 54	1	DM 87								
209-587183- 11	129 - 1	1	DM 87						R	1650-571-7149	ANAA
	138										
209-587183- 12	129	1	DM 87						R	1650-571-7151	ANAA
	138										
209-587184	138 - 28	1	DL220						R	1650-571-7150	ANAA
209-587185	138 - 23	1	DL253						R	1650-571-7015	ANAA
209-587186	138 - 26	1	DL221						R	1650-571-7152	ANAA
209-587187	138 - 40	1	DL222						R	1650-571-7153	ANAA
209-587188	138 - 54	1	DL342								
209-587188- 3		1							R	1650-571-7154	ANAA
209-587189	138 - 20	1	DL223								
209-587189- 11		1	DL223						R	5340-573-1038	ANAA
209-587190- 11	138 - 46	1	DR177						R	1650-571-7157	ANAA
209-587190- 12	138	1	DR177						R	1650-571-7155	ANAA
209-587191	138 - 10	2	DR100	M		O					
209-587191- 3		1	DR100	M		O					
209-587192	138 - 12	2	DR101	M		O					
209-587192- 1		1	DR101	M		O					
209-587192- 2		1	DR101	M		O					
209-587192- 5		1	DR101	M		O					
209-587192- 6		1	DR101	M		O					
209-587193- 1	138 - 62	1	DL336								
209-587193- 2	138	1	DL336								
209-587194	138 - 8	1	DM 69						R	1560-571-7007	ANAA
	176 - 57										

PART NUMBER	FIGURE AND INDEX	TOTAL QTY.	MICRO-FILM NUMBER	MAINTENANCE CODE DATA: SOURCE CODE	INST'L CAPABILITY	PRE-INST'L CAPABILITY	RECOVERABILITY	SUPPORT EQUIPMENT	FEDERAL STOCK NUMBER DATA: COGNIZANCE CODE	FEDERAL STOCK NUMBER	MFG. CODE (TSMC)
209-58719 5		1	DQ129								
209-58719 5- 3		1		X1							
209-58719 5- 4		1		X1							
209-58719 5- 11		1		X1							
209-58719 5- 12		1		X1							
209-58720	128 - 90	2	BM 75	P	F	O	S		R	1650-037-2945	ANAA
209-58721- 1	128 - 77	1	BM 76	P	F	O	S		R	1650-037-2946	ANAA
209-58721- 2	128	1	BM 76	P	F	O	S		R	1650-037-2947	ANAA
209-58721- 3		1	BM 76								
209-58721- 4		1	BM 76	X1							
209-58722	128	2	BH354	P1	F	O	S		R	1560-511-3472	ANAA
209-58723- 3	128 - 84	2	BE 83	M		O					
209-58724	128 - 94	1									
	155 - 25										
209-58725	128 -111	4	DL286	P1	F	O	C		R	1650-511-3484	ANAA
	138 - 50										
	155 - 28										
209-58726- 3	128 -110	4	BW109	P1	F	O	S		R	1650-031-5653	ANAA
209-58727- 3	128 - 29	1	BW 62	P1	F	O	S		R	1650-031-5654	ANAA
209-58727- 4	128	1	BW 62	F	F	O	S		R	1650-031-5655	ANAA
209-58728	128 - 30	2	BH357	P	F	O	S		R	5306-031-5656	ANAA
209-58729		2	BH358						R	5306-031-5164	ANAA
209-58729- 11	122 - 99	2	BH358	P	F	O	S		R	5306-515-7241	ANAA
	129 -166										
	125 - 90	1									
209-58730- 3		1	BU 84								
209-58730- 5	133 - 12	1	BU	P1	F	O	S		R	1560-348-8427	ANAA
209-58730- 6	133	1	BU 84	P1	F	O	S		R	1560-348-8427	ANAA
209-58731	188 - 72	2	CA222	P1	F	O	S		R	1560-570-2926	ANAA
209-58731- 1		2	CA222								
209-58731- 2		2	CA222								
209-58732	128 - 48	2	BH359	P	F	O	S		R	1650-031-5657	ANAA
209-58733	128 - 56	2	DL287	P1	F	O	S		R	1560-570-2925	ANAA
	138 - 55										
	155 - 53										
209-58734- 1	128 -102	1									
209-58734- 2	128	1									
209-58735	128 - 17	2	BH251	P	F	O	S		R	1650-031-5658	ANAA
209-58736	122 -100	2	BM 78	A		F					
	125 - 89	1									
	180 -172										
209-58737- 7	128	2	DM116	P	F	O	S		R	1650-031-5659	ANAA
209-58737- 8	128	2	DM116	P	F	O	S		R	1650-031-5660	ANAA
209-58737- 11	131	2	DM116	P1	F	O	S		R	1560-338-1026	ANAA
209-58737- 13	138 - 58	1	DM116						R	1650-571-7106	ANAA
209-58737- 75	128 - 51	6	DM116	X1							
	128 - 59										
	131 - 78										
	138										
209-58737-105	128 - 53	4	DM116	X1							
	128 - 61										
209-58737-107		2	DM116	X1							
209-58737-109	191 - 80	2	DM116	X1							
209-58737-111	138	1	DM116	X1							
209-58738	128 - 16	2	BH361	M		O					
209-58739	122 - 94	1	BU 72								
209-58739- 21	133	1	BU 72	A		F					
209-58739- 22	133	1	BU 72	A		F					
209-58739- 31	133	1	BU 72	A		F					
209-58739- 32	133	1	BU 72	A		F					
209-58740- 5	133 - 12	1	BU 73	M		O					
209-58740- 6	133	1	BU 73	M		O					
209-58741- 1	128 - 64	1	BH362	M		O					
209-58741- 2	128	1	BH362	M		O					
209-58743	128 - 82	2	BE 84	M		O					
209-58744	128 - 38	2	BE 85	M		O					
209-58747	128 - 34	2	BX247	M		O					
209-58748	128 - 46	2	BH363	M		O					
209-58749	128 - 47	2	BE 86	P	F	O	C		R	5310-550-4152	ANAA
209-58750- 1		1	BM 80								
209-58750- 2		1	BM 80								
209-58750- 3		1	BM 80								
209-58750- 4		1	BM 80								
209-58750- 5		2	BM 80	M		O					
209-58750- 7		1	BM 80	M		O					
209-58750- 9		1	BM 80	M		O					
209-58750- 11	133 - 13	1	BM 80	M		O					
209-58750- 12	133	1	BM 80	M		O					
209-58751	180	4	BP198	P	F	O	C		R	1560-550-9451	ANAA
209-58752	180	4	BH364	P	F	O	C		R	5340-531-7792	ANAA
209-58753- 3		1	BW 59	X1							
209-58753- 4		1	BW 59	X1							
209-58753- 11	128 -102	1	BW 59	P1	F	O	S		R	1650-031-5661	ANAA
209-58753- 12	128	1	BW 59	P1	F	O	S		R	1650-031-5662	ANAA
209-58754- 3	128 - 22	2	BW154	P1	F	O	S		R	1650-338-1080	ANAA
209-58755	131 - 18	1	BW195								
209-58755- 3	131	1	BW195	P1	F	O	S		R	1650-341-4734	ANAA
209-58756	128 - 13	1	BW193								
209-58756- 3	128	2	BW193	P1	F	O	S		R	1650-694-8123	ANAA
209-58757- 3	131 - 22	1	BW163	P1	F	O	S		R	1560-561-7246	ANAA
209-58771	180	2	BM 84	P	F	O	C		R	5340-511-2480	ANAA
209-58771- 3		1	BM 84	M		O					
209-58772	123 -167	2	BM 81	A		F					
	160 -173										
209-58773- 3		2	DP188	M		F					
	125	1									
209-58773- 5		2	DP188	M		F					
	125	1									
209-58773- 7		1	DP188	M		O					
	125	1									
209-58773- 9		1	DP188	M		O					
	125	1									
209-58773- 11	125	1									
	129 - 2	1	DP188	M		O			R	1650-555-9432	ANAA
209-58775- 5	131 - 38	1	BS 64	X1							
209-58775- 5	131	1	BS 64	X1							
209-58776- 3	131 - 9	1	BW 50	X1							
209-58776- 5	131	1	BW 50	P2	F	O	S		R	1650-037-2948	ANAA
209-58777	131 - 18	1	BM 82	P1	F	O	S		R	1650-031-5663	ANAA
209-58778	131 - 22	1	BM 83	P1	F	O	S		R	1650-031-5664	ANAA
209-58779- 3	131 - 47	1	BX 3	X1							
209-58779- 4	131 - 50	1	BX 3	X1							
209-58779- 5	131	1	BX 3	P1	F	O	S		R	1650-031-5665	ANAA
209-58779- 6	131	1	BX 3	P1	F	O	S		R	1650-031-5666	ANAA
209-58780	131 - 66	1	BH365	P1	F	O	S		R	1650-031-5667	ANAA
209-58781	131 - 6	1	BE 87	M		O					
209-58782	131 - 35	1	BH366	P1	F	O	S		R	1650-031-5668	ANAA
209-58783	131 - 21	1	BE 88	P1	F	O	S		R	1650-031-5669	ANAA
209-58784	131 - 10	1	BH367	P1	F	O	S		R	1650-031-5670	ANAA
209-58785	131 - 3	1	BH368	M		O					
209-58786	191 - 55	1	BH369	M		O					
209-58787	131 - 57	2	BH370	P1	F	O	S		R	1560-031-5671	ANAA
209-58788- 3	131 - 28	1	BW110	X1					R	1650-031-5672	ANAA
209-58788- 5	131	1	BW110	P1	F	O	S		R	1650-031-5672	ANAA
209-58789	122	2	DH 37	M		O					
	123										
	125	2									
209-58790	131 - 17	1	BE 89	M		O					
209-58792	131 - 9	2	BE 90	P	F	O	S		R	5305-031-5673	ANAA
209-58793	89 - 52	1	BH372	M		O					
209-58794	131 - 85	1	BH373	M		O					
	155 - 15										
209-58795	122 - 52	2	DH 16	P	F	O	S		R	1560-031-5165	ANAA
	123 -109										
	125 - 62	2									
209-58797- 3	123 -155	6	DL 95	M		O					
	125 - 60	1									
209-58797- 4	123 -156	1	DL 95	M		O					
	125 - 61	1									
209-58805- 3	135 -114	1	BY 70	M		F					
209-58805- 5	141 - 84	1	BY 70	M		F					
209-58805- 7	142 - 44	1	BY 70	M		F					
209-58805- 9	143 - 59	1	BY 70	M		F					
209-58805- 11	144 - 17	1	BY 70	M		F					
209-58805- 13	150 - 29	1	BY 70	M		F					
209-58805- 25	163 - 79	1	BY 70	M		F					
209-58805- 27	143 - 55	1	BY 70	M		F					
209-58805- 29	144 - 14	1	BY 70	M		F					
209-58805- 31	142 - 41	1	BY 70	M		F					
209-58805- 33	141 - 81	1	BY 70	M		F					
209-58805- 35	163 - 80	1	BY 70	M		F					
209-58805- 37	143 - 53	1	BY 70	M		F					
209-58805- 39	142 - 39	1	BY 70	M		F					
209-58805- 41	144 - 12	1	BY 70	M		F					
209-58805- 43	141 - 79	1	BY 70	M		F					
209-58805- 51	150 - 25	1	BY 70	M		F					
209-58805- 53	150 - 36	1	BY 70	M		F					
209-58805- 55	158 - 74	1	BY 70	M		F					
209-58805- 57	158 - 71	1	BY 70	M		F					
	159 - 52	1									
209-58805- 59	158 - 72	1	BY 70	M		F					
	159 - 53	1									
209-58805- 61	158 - 75	1	BY 70	M		F					
	159 - 55	1									
209-58805- 65	163 - 77	1	BY 70	M		F					
209-58805- 67	143 - 57	1	BY 70	M		F					
209-58805- 69	141 - 82	1	BY 70	M		F					
209-58805- 71	144 - 15	1	BY 70	M		F					
209-58805- 73	142 - 42	1	BY 70	M		F					
209-58805- 75	163 - 75	1	BY 70	M		F					
209-58805- 77	150	1	BY 70	M		F					
209-58805- 79	142	1	BY 70	M		F					
209-58805- 81	144	1	BY 70	M		F					
209-58805- 83	141	1	BY 70	M		F					
209-58805- 85	163	1	BY 70	M		F					
209-58805- 87	143	1	BY 70	M		F					
209-58805- 89	144	1	BY 70	M		F					
209-58805- 91	142	1	BY 70	M		F					
209-58805- 93	141	1	BY 70	M		F					
209-58805- 95	163	1	BY 70								
209-58805-103		1	BY 70	M		F					
209-58805-105		1	BY 70	M		F					
209-58805-107		1	BY 70	M		F					
209-58805-109		1	BY 70	M		F					
209-58805-111		1	BY 70	M		F					
209-58805-113		1	BY 70	M		F					
209-58805-125		1	BY 70	M		F					
209-58805-127		1	BY 70	M		F					
209-58805-129		1	BY 70	M		F					
209-58805-131		1	BY 70	M		F					
209-58805-133		1	BY 70	M		F					
209-58805-135		1	BY 70	M		F					
209-58805-137		1	BY 70	M		F					
209-58805-139		1	BY 70	M		F					
209-58805-141		1	BY 70	M		F					
209-58805-143		1	BY 70	M		F					
209-58805-147		1	BY 70	M		F					
209-58805-149		1	BY 70	M		F					
209-58805-151		1	BY 70	M		F					
209-58805-153		1	BY 70	M		F					
209-58805-157		1	BY 70	M		F					
209-58805-159		1	BY 70	M		F					
209-58805-161		1	BY 70	M		F					
209-58805-165		1	BY 70	M		F					
209-58805-167		1	BY 70	M		F					
209-58805-169		1	BY 70	M		F					
209-58805-171		1	BY 70	M		F					
209-58805-173		1	BY 70	M		F					
209-58805-175		1	BY 70	M		F					
209-58805-177		1	BY 70	M		F					

PART NUMBER	FIGURE AND INDEX	TOTAL QTY.	MICRO-FILM NUMBER	MAINTENANCE CODE DATA: SOURCE CODE	INSTL CAPABILITY	PRE-INSTL CAPABILITY	RECOVERABILITY	SUPPORT EQUIPMENT	FEDERAL STOCK NUMBER DATA: COGNIZANCE CODE	FEDERAL STOCK NUMBER	MFG. CODE (TSMC)
209-58805-179		1	BY 70	M		F					
209-58805-181		1	BY 70	M		F					
209-58805-183		1	BY 70	M		F					
209-58805-185		1	BY 70	M		F					
209-58805-187		1	BY 70	M		F					
209-58805-189		1	BY 70	M		F					
209-58805-191		1	BY 70	M		F					
209-58805-193		1	BY 70	M		F					
209-58805-195		1	BY 70	M		F					
209-58806- 3	135 -111	1	BV202	M		F					
209-58806- 5	135 -109	1	BV202	M		F					
209-58806- 11	135 -105	1	BV202	M		F					
	158										
209-58806- 13	135 -103	1	BV202	M		F					
	158 - 77										
209-58806- 15	135 -110	1	BV202	M		F					
209-58806- 17	135 -106	1	BV202	M		F					
209-58806- 19	135 -102	1	BV202	M		F					
209-58806- 21	135 -107	1	BV202	M		F					
209-58806- 23	135 - 97	1	BV202	M		F					
209-58806- 27	135 - 98	1	BV202	M		F					
209-58806- 37		1	BV202								
209-58806- 39	163 - 17	1	BV202	M		F					
209-58806- 45	135 - 68	1	BV202	M		F					
209-58806- 47	163 - 35	1	BV202	M		F					
209-58806- 49	163 - 30	1	BV202	M		F					
209-58806- 51	163 - 14	1	BV202	M		F					
209-58806- 53	135 - 69	1	BV202	M		F					
209-58806- 55	135 - 66	1	BV202	M		F					
209-58806- 57	163 - 32	1	BV202	M		F					
209-58806- 59	163 - 31	1	BV202	M		F					
209-58806- 61	135 - 67	1	BV202	M		F					
209-58806- 63	163 - 12	1	BV202	M		F					
209-58806- 65	170 - 1	1	BV202	M		F					
209-58806- 67	163 - 19	1	BV202	M		F					
209-58806- 75		1	BV202	M		F					
209-58806- 79	158 - 13	1	BV202	M		F					
209-58806- 81	158 - 22	1	BV202	M		F					
209-58806- 85	158 - 14	1	BV202	M		F					
209-58806- 87	158 - 5	1	BV202	M		F					
209-58806- 89	158 - 32	1	BV202	M		F					
209-58806- 91	158 - 31	1	BV202	M		F					
209-58806- 93	158 - 35	1	BV202	M		F					
209-58806- 95	158 - 34	1	BV202	M		F					
209-58806-103		1	BV202	M		F					
209-58806-105		1	BV202	M		F					
209-58806-111		1	BV202	M		F					
209-58806-113		1	BV202	M		F					
209-58806-115		1	BV202	M		F					
209-58806-117		1	BV202	M		F					
209-58806-119		1	BV202	M		F					
209-58806-121		1	BV202	M		F					
209-58806-123		1	BV202	M		F					
209-58806-127		1	BV202	M		F					
209-58806-139		1	BV202	M		F					
209-58806-145		1	BV202	M		F					
209-58806-147		1	BV202	M		F					
209-58806-149		1	BV202	M		F					
209-58806-151		1	BV202	M		F					
209-58806-153		1	BV202	M		F					
209-58806-155		1	BV202	M		F					
209-58806-157		1	BV202	M		F					
209-58806-159		1	BV202	M		F					
209-58806-161		1	BV202	M		F					
209-58806-163		1	BV202	M		F					
209-58806-165		1	BV202	M		F					
209-58806-167		1	BV202	M		F					
209-58806-173		1	BV202	M		F					
209-58806-179		1	BV202	M		F					
209-58806-181		1	BV202	M		F					
209-58806-185		1	BV202	M		F					
209-58806-187		1	BV202	M		F					
209-58806-189		1	BV202	M		F					
209-58806-191		1	BV202	M		F					
209-58806-193		1	BV202	M		F					
209-58806-195		1	BV202	M		F					
209-58807- 3	134 - 85	1	CD 35	M		F					
	135 - 51										
209-58807- 5	135 - 53	1	CD 35	M		F					
209-58807- 7	135 - 56	1	CD 35	M		F					
209-58807- 9	135 - 55	1	CD 35	M		F					
209-58807- 11	163 - 1	1	CD 35	M		F					
209-58807- 13	134 - 71	1	CD 35	M		F					
	135 - 43	1									
209-58807- 15	163 - 9	1	CD 35	M		F					
209-58807- 17	134 - 91	1	CD 35	M		F					
	135 - 64										
209-58807- 19	134 - 72	1	CD 35	M		F					
	135 - 44										
209-58807- 21	135 - 63	1	CD 35	M		F					
209-58807- 23	134 - 87	1	CD 35	M		F					
	135 - 57										
209-58807- 27	163 - 4	1	CD 35	M		F					
209-58807- 29	163 - 11	1	CD 35	M		F					
209-58807- 31	135 - 45	1	CD 35	M		F					
209-58807- 33	135 - 61	1	CD 35	M		F					
209-58807- 35	135 - 58	1	CD 35	M		F					
209-58807- 37	135 - 59	1	CD 35	M		F					
209-58807- 39	135	1	CD 35	M		0					
209-58807- 41	134 - 90	1	CD 35	M		F					
	135										
209-58807- 43	134 - 89	1	CD 35	M		F					
	135										
209-58807- 45	134 - 93	1	CD 35	M		F					
	135										
209-58807- 47	134 - 92	1	CD 35	M		F					
	135										
209-58807- 49	134 -126	1									
		1	CD 35	M		F					
209-58807- 51	163	1	CD 35	M		F					
209-58807- 53	134 - 73	1	CD 35	M		F					
209-58807- 55		1	CD 35	M		F					
	125 - 92	1									
209-58807- 57	125 - 93	1									
	163 -120	REF									
		1	CD 35	M		F					
209-58807- 59	163	1	CD 35	M		F					
209-58807- 61		1	CD 35	M		F					
	125	1									
209-58807- 63	163	1	CD 35	M		F					
209-58807- 65	134 - 83	1	CD 35	M		F					
209-58807-103		1	CD 35	M		F					
209-58807-105		1	CD 35	M		F					
209-58807-107		1	CD 35	M		F					
209-58807-109		1	CD 35	M		F					
209-58807-111		1	CD 35	M		F					
209-58807-113		1	CD 35	M		F					
209-58807-115		1	CD 35	M		F					
209-58807-117		1	CD 35	M		F					
209-58807-119		1	CD 35	M		F					
209-58807-121		1	CD 35	M		F					
209-58807-123		1	CD 35	M		F					
209-58807-127		1	CD 35	M		F					
209-58807-129		1	CD 35	M		F					
209-58807-131		1	CD 35	M		F					
209-58807-133		1	CD 35	M		F					
209-58807-135		1	CD 35	M		F					
209-58807-137		1	CD 35	M		F					
209-58807-139		1	CD 35	M		F					
209-58807-141		1	CD 35	M		F					
209-58807-143		1	CD 35	M		F					
209-58807-145		1	CD 35	M		F					
209-58807-147		1	CD 35	M		F					
209-58807-149		1	CD 35	M		F					
209-58807-151		1	CD 35	M		F					
209-58807-153		1	CD 35	M		F					
209-58807-155		1	CD 35	M		F					
209-58807-157		1	CD 35	M		F					
209-58807-159		1	CD 35	M		F					
209-58807-161		1	CD 35	M		F					
209-58807-163		1	CD 35	M		0					
209-58807-165		1	CD 35	M		0					
209-58808- 3	135 - 5	1	DP100	M		F					
	164 -126										
209-58808- 5	135 - 9	1	DP100	M		F					
209-58808- 9	135 - 8	1	DP100	M		F					
209-58808- 13	126 - 77	1	DP100	M		F					
	127 - 99										
209-58808- 15	126 - 65	1	DP100	M		F					
	127 - 82										
209-58808- 17	126 - 17	1	DP100	M		F					
	127 - 17										
209-58808- 19	126 - 14	1	DP100	M		F					
	127 - 14										
209-58808- 21	126 - 12	1	DP100	M		F					
	127 - 12										
209-58808- 23	126 - 67	1	DP100	M		F					
	127 - 84										
209-58808- 25	126 - 26	1	DP100	M		F					
	127 - 26										
209-58808- 27	126 - 29	1	DP100	M		F					
	127 - 29										
209-58808- 29	126 - 27	1	DP100	M		F					
	127 - 27										
209-58808- 33	126 - 32	1	DP100	M		F					
	127 - 32										
209-58808- 35	126 - 47	1	DP100	M		F					
209-58808- 37	126 - 34	1	DP100	M		F					
209-58808- 39	126 - 43	1	DP100	M		F					
209-58808- 43	126 - 70	1	DP100	M		F					
	127 - 92										
209-58808- 45	126 - 71	1	DP100	M		F					
	127 - 93										
209-58808- 49	126 - 64	1	DP100	M		F					
209-58808- 51	126 - 58	1	DP100	M		F					
	127 - 61										
209-58808- 53	126 - 60	1	DP100	M		F					
	127 - 63										
209-58808- 55	126 - 63	1	DP100	M		F					
	127 - 66										
209-58808- 57	126 - 62	1	DP100	M		F					
	127 - 65										
209-58808- 59	126 - 73	1	DP100	M		F					
	127 - 95										
209-58808- 61	126 - 3	1	DP100	M		F					
209-58808- 63	126 - 5	1	DP100	M		F					
209-58808- 65	135 - 2	1	DP100	M		F					
209-58808- 71	165 - 96	1	DP100								
209-58808- 73	135 - 14	1	DP100	M		F					
209-58808- 79	134 - 19	1	DP100	M		F					
	135 - 16										
209-58808- 81	134 - 18	1	DP 10	M		F					
	135 - 15										
209-58808- 83	163 - 85	1	DP100	M		F					
209-58808- 85	134 - 7	1	DP100	M		F					
	135 - 6										
	164										
	165										
209-58808- 93	135 - 13	1	DP100	M		F					
209-58808-103		1	DP100	M		F					

PART NUMBER	FIGURE AND INDEX	TOTAL QTY.	MICRO-FILM NUMBER	MAINTENANCE CODE DATA: SOURCE CODE	INSTL CAPABILITY	PR-INSTL CAPABILITY	RECOVERABILITY	SUPPORT EQUIPMENT	FEDERAL STOCK NUMBER DATA: COGNIZANCE CODE	FEDERAL STOCK NUMBER	MFG. CODE (TSMC)
209-58808-105		1	DP100	M		F					
209-58808-109		1	DP100	M		F					
209-58808-113		1	DP100	M		F					
209-58808-115		1	DP100	M		F					
209-58808-117		1	DP100	M		F					
209-58808-119		1	DP100	M		F					
209-58808-121		1	DP100	M		F					
209-58808-123		1	DP100	M		F					
209-58808-125		1	DP100	M		F					
209-58808-127		1	DP100	M		F					
209-58808-129		1	DP100	M		F					
209-58808-133		1	DP100	M		F					
209-58808-135		1	DP100	M		F					
209-58808-137		1	DP100	M		F					
209-58808-139		1	DP100	M		F					
209-58808-143		1	DP100	M		F					
209-58808-145		1	DP100	M		F					
209-58808-149		1	DP100	M		F					
209-58808-151		1	DP100	M		F					
209-58808-153		1	DP100	M		F					
209-58808-155		1	DP100	M		F					
209-58808-157		1	DP100	M		F					
209-58808-159		1	DP100	M		F					
209-58808-161		1	DP100	M		F					
209-58808-163		1	DP100	M		F					
209-58808-165		1	DP100	M		F					
209-58808-173		1	DP100	M		F					
209-58808-179		1	DP100	M		F					
209-58808-181		1	DP100	M		F					
209-58808-183		1	DP100	M		F					
209-58808-185		1	DP100	M		F					
209-58808-193		1	DP100	M		F					
209-58810- 3	135 - 28 358	1	DH154	M		F					
209-58810- 5	135 - 30 358	1	DH154	M		F					
209-58810- 7	135 - 32 358	1	DH154	M		F					
209-58810- 9	134 - 50 135 - 37 153 - 47 154 - 48 358	1	DH154	M		F					
209-58810- 11	134 - 49 135 - 36 162 - 19 358	1 1	DH154	M		F					
209-58810- 13	135 - 29 358	1	DH154	M		F					
209-58810- 15	135 - 31 358	1	DH154	M		F					
209-58810- 19	134 - 54 135 - 41 358	1	DH154	M		F					
209-58810- 23	153 - 5 358	1	DH154	M		F					
209-58810- 25	153 - 13 358	1	DH154	M		F					
209-58810- 29	153 - 7 154 - 7 358	1	DH154	M		F					
209-58810- 31	153 - 20 154 - 19 358	1	DH154	M		F					
209-58810- 35	153 - 21 154 - 20 358	1	DH154	M		F					
209-58810- 37	153 - 43 358	1	DH154	M		F					
209-58810- 41	153 - 36 358	1	DH154	M		F					
209-58810- 43	153 - 29 154 - 30 358	1	DH154	M		F					
209-58810- 45	153 - 27 154 - 28 358	1	DH154	M		F					
209-58810- 49	153 - 30 154 - 31 358	1	DH154	M		F					
209-58810- 51	162 - 9 358	1	DH154	M		F					
209-58810- 53	122 - 24 358	1	DH154	M		F					
209-58810- 55	122 - 27 358	1	DH154	M		F					
209-58810- 57	122 - 29 123 - 30 358	1	DH154	M		F					
209-58810- 59	122 - 25 358	1	DH154	M		F					
209-58810- 61	122 - 28 358	1	DH154	M		F					
209-58810- 63	122 - 30 358	1	DH154	M		F					
209-58810- 67	125 358	1	DH154	M		F					
209-58810- 71	125 358	1	DH154	M		F					
209-58810- 73	153 - 44 358	1	DH154	M		F					
209-58810- 75	153 - 46 154 - 47 358	1	DH154	M		F					
209-58810- 77	135 - 33	1	DH154	M		F					
209-58810- 83	358 134 - 55 135 - 42 153 - 50 154 - 87 358	1	DH154	M		F					
209-58810- 85	134 - 52 135 - 40 153 - 48 154 - 49 358	1	DH154	M		F					
209-58810- 87	125 - 23 358	1	DH154	M		F					
209-58810- 89	125 - 22 358	1	DH154	M		F					
209-58810- 91	135 - 34 162 - 17 358	1	DH154	M		F					
209-58810- 93	125 - 25 358	1	DH154	M		F					
209-58810- 95	125 - 26 358	1	DH154	M		F					
209-58810-103		1	DH154	M		F					
209-58810-105		1	DH154	M		F					
209-58810-107		1	DH154	M		F					
209-58810-109		1	DH154	M		F					
209-58810-111		1	DH154	M		F					
209-58810-113		1	DH154	M		F					
209-58810-115		1	DH154	M		F					
209-58810-119		1	DH154	M		F					
209-58810-121		1	DH154	M		F					
209-58810-123		1	DH154	M		F					
209-58810-125		1	DH154	M		F					
209-58810-129		1	DH154	M		F					
209-58810-131		1	DH154	M		F					
209-58810-135		1	DH154	M		F					
209-58810-137		1	DH154	M		F					
209-58810-141		1	DH154	M		F					
209-58810-143		1	DH154	M		F					
209-58810-145		1	DH154	M		F					
209-58810-149		1	DH154	M		F					
209-58810-151		1	DH154	M		F					
209-58810-153		1	DH154	M		F					
209-58810-155		1	DH154	7		F					
209-58810-157		1	DH154	M		F					
209-58810-159		1	DH154	M		F					
209-58810-161		1	DH154	M		F					
209-58810-163		1	DH154	M		F					
209-58810-167		1	DH154	M		F					
209-58810-171		1	DH154	M		F					
209-58810-173		1	DH154	M		F					
209-58810-175		1	DH154	M		F					
209-58810-177		1	DH154	M		F					
209-58810-183		1	DH154	M		F					
209-58810-185		1	DH154	M		F					
209-58810-187		1	DH154	M		F					
209-58810-189		1	DH154	M		F					
209-58810-191		1	DH154	M		F					
209-58810-193		1	DH154	M		F					
209-58810-195		1	DH154	M		F					
209-58811- 3	124 - 83	1	CU229	M		F					
209-58811- 5	124 - 81	1	CU229	M		F					
209-58811- 7	124 - 78	1	CU229	M		F					
209-58811- 11	124 - 80	1	CU229	M		F					
209-58811- 13	124 - 65	1	CU229	M		F					
209-58811- 15	124 - 64	1	CU229	M		F					
209-58811- 17	124 - 28	1	CU229	M		F					
209-58811- 19	124 - 77	1	CU229	M		F					
209-58811- 21	124 - 7	1	CU229	M		F					
209-58811- 23	124 - 5	1	CU229	M		F					
209-58811- 25	124 - 29	1	CU229	M		F					
209-58811- 27	124 - 3	1	CU229	M		F					
209-58811- 29	124 - 12	1	CU229	M		F					
209-58811- 31	124 - 14	1	CU229	M		F					
209-58811- 33	124 -103	1	CU229	M		F					
209-58811- 35	124 - 26	1	CU229	M		F					
209-58811- 37	124 - 32	1	CU229	M		F					
209-58811- 39	124 - 50	1	CU229	M		F					
209-58811- 41	124 -112	1	CU229	M		F					
209-58811- 43	124 - 25	1	CU229	M		F					
209-58811- 49	124 - 20	1	CU229	M		F					
209-58811- 51	124 - 18	1	CU229	M		F					
209-58811- 53	124 - 16	1	CU229	M		F					
209-58811- 55	124 -102	1	CU229	M		F					
209-58811- 57	124 - 92	1	CU229	M		F					
209-58811- 59	134 - 23 135 - 20	1	CU229	M		F					
209-58811- 61	134 - 24 135 - 21	1	CU229	M		F					
209-58811- 63	134 - 25 135 - 22	1	CU229	M		F					
209-58811- 65	135 - 17	1	CU229	M		F					
209-58811- 67	144 - 1	1	CU229	M		F					
209-58811- 69	144 - 3	1	CU229	M		F					
209-58811- 71	143 - 1	1	CU229	M		F					
209-58811- 73	143 - 2	1	CU229	M		F					
209-58811- 75	143 - 4	1	CU229	M		F					
209-58811- 77	141 - 29	1	CU229	M		F					
209-58811- 79	141 - 13	1	CU229	M		F					
209-58811- 81	141 - 15	1	CU229	M		F					
209-58811- 83	141 - 16	1	CU229	M		F					
209-58811- 85	142 - 1	1	CU229	M		F					
209-58811- 87	142 - 2	1	CU229	M		F					
209-58811- 89	163 - 82	1	CU229	M		F					
209-58811- 91	124 - 9	1	CU229	M		F					

PART NUMBER	FIGURE AND INDEX	TOTAL QTY.	MICRO-FILM NUMBER	MAINTENANCE CODE DATA: SOURCE CODE	INSTL CAPABILITY	PRE-INSTL CAPABILITY	RECOVERABILITY	SUPPORT EQUIPMENT	FEDERAL STOCK NUMBER DATA: COGNIZANCE CODE	FEDERAL STOCK NUMBER	MFG. CODE (TSMC)
209-58811- 93	124 - 46	1	CU229	M		F					
209-58811- 95	124 - 55	1	CU229	M		F					
209-58811-103		1	CU229	M		F					
209-58811-105		1	CU229	M		F					
209-58811-107		1	CU229	M		F					
209-58811-111		1	CU229	M		F					
209-58811-113		1	CU229	M		F					
209-58811-115		1	CU229	M		F					
209-58811-117		1	CU229	M		F					
209-58811-119		1	CU229	M		F					
209-58811-121		1	CU229	M		F					
209-58811-123		1	CU229	M		F					
209-58811-125		1	CU229	M		F					
209-58811-127		1	CU229	M		F					
209-58811-129		1	CU229	M		F					
209-58811-131		1	CU229	M		F					
209-58811-133		1	CU229	M		F					
209-58811-135		1	CU229	M		F					
209-58811-137		1	CU229	M		F					
209-58811-139		1	CU229	M		F					
209-58811-141		1	CU229	M		F					
209-58811-143		1	CU229	M		F					
209-58811-149		1	CU229	M		F					
209-58811-151		1	CU229	M		F					
209-58811-153		1	CU229	M		F					
209-58811-155		1	CU229	M		F					
209-58811-157		1	CU229	M		F					
209-58811-159		1	CU229	M		F					
209-58811-161		1	CU229	M		F					
209-58811-163		1	CU229	M		F					
209-58811-165		1	CU229	M		F					
209-58811-167		1	CU229	M		F					
209-58811-169		1	CU229	M		F					
209-58811-171		1	CU229	M		F					
209-58811-173		1	CU229	M		F					
209-58811-175		1	CU229	M		F					
209-58811-177		1	CU229	M		F					
209-58811-179		1	CU229	M		F					
209-58811-181		1	CU229	M		F					
209-58811-183		1	CU229	M		F					
209-58811-185		1	CU229	M		F					
209-58811-187		1	CU229	M		F					
209-58811-189		1	CU229	M		F					
209-58811-191		1	CU229	M		F					
209-58811-193		1	CU229	M		F					
209-58811-195		1	CU229	M		F					
209-58812- 3	122 - 91	1	CV 86	M		F					
209-58812- 5	122 - 95	1	CV 86	M		O					
209-58812- 7	122 - 38	1	CV 86	M		O					
209-58812- 9	122 - 36	1	CV 86	M		F					
209-58812- 11	122 - 39	1	CV 86	M		F					
209-58812- 15	125 - 30	1	CV 86	M		F					
209-58812- 17		1	CV 86	M		F					
209-58812- 19	125	1	CV 86	M		F					
209-58812- 21	122	1	CV 86	M		F					
209-58812- 23	122	1	CV 86	M		F					
209-58812- 25	122	1	CV 86	M		F					
209-58812- 27	125	1	CV 86	M		F					
209-58812- 29	125 - 27	1	CV 86	M		F					
209-58812-103		1	CV 86	M		F					
209-58812-105		1	CV 86	M		O					
209-58812-107		1	CV 86	M		O					
209-58812-109		1	CV 86	M		F					
209-58812-111		1	CV 86	M		F					
209-58812-115		1	CV 86	M		F					
209-58812-117		1	CV 86	M		F					
209-58812-119		1	CV 86	M		F					
209-58812-121		1	CV 86	M		F					
209-58812-123		1	CV 86	M		F					
209-58812-125		1	CV 86	M		F					
209-58812-127		1	CV 86	M		F					
209-58812-129		1	CV 86	M		F					
209-58814- 3	122 - 85	1	BM 91	M		F					
209-58814- 7	122 - 87	1	BM 91								
209-58814- 87	164 - 41	1	BM 91	M		F					
209-58814- 89	164	1	BM 91	M		F					
209-58814- 91	164 - 43	1	BM 91	M		F					
209-58814- 93	164	1	BM 91	M		F					
209-58814-103		1	BM 91								
209-58814-107		1	BM 91	M		F					
209-58814-187		1	BM 91	M		F					
209-58814-189		1	BM 91	M		F					
209-58814-191		1	BM 91	M		F					
209-58814-193		1	BM 91	M		F					
209-58815- 27	164 -117	1	BM 92	M		F					
209-58815- 29	164 357	1	BM 92	M		F					
209-58815- 31	164 -118	1	BM 92	M		F					
209-58815- 33	357	1	BM 92								
209-58815-127		1	BM 92	M		F					
209-58815-129		1	BM 92	M		F					
209-58815-131		1	BM 92	M		F					
209-58815-133		1	BM 92	M		F					
209-58816- 5	142 - 46	1	BM 93	M		F					
209-58816- 7	141 - 86	1	BM 93	M		F					
209-58816- 9	144 - 21	1	BM 93	M		F					
209-58816- 11	143 - 61	1	BM 93	M		F					
209-58816- 13	144 - 19	1	BM 93	M		F					
209-58816- 15	142 - 53	1	BM 93	M		F					
209-58816- 17	135 -113	1	BM 93	M		F					
209-58816- 19	149 - 8	1	BM 93	M		F					
209-58816- 21	159 - 36	1									
209-58816- 23	159 - 35	1									
209-58816- 25	159	1	BM 93	M		O					
209-58816- 27	159	1	BM 93	M		O					

PART NUMBER	FIGURE AND INDEX	TOTAL QTY.	MICRO-FILM NUMBER	MAINTENANCE CODE DATA: SOURCE CODE	INSTL CAPABILITY	PRE-INSTL CAPABILITY	RECOVERABILITY	SUPPORT EQUIPMENT	FEDERAL STOCK NUMBER DATA: COGNIZANCE CODE	FEDERAL STOCK NUMBER	MFG. CODE (TSMC)
209-58816-105		1	BM 93	M		F					
209-58816-107		1	BM 93	M		F					
209-58816-109		1	BM 93	M		F					
209-58816-111		1	BM 93	M		F					
209-58816-113		1	BM 93	M		F					
209-58816-119		1	BM 93	M		F					
209-58816-121		1	BM 93	M		F					
209-58816-123		1	BM 93	M		F					
209-58816-125		1	BM 93	M		O					
209-58816-127		1	BM 93	M		O					
209-58816-151		1	BM 93	M		F					
209-58816-171		1	BM 93	M		F					
209-58817- 7	122 - 80 123 -138	1	BM 95								
209-58817- 9	122 - 81 123 -139	1	BM 95	M		F					
209-58817- 11	122 - 82 123 -140	1	BM 95	M		F					
209-58817- 13	122 - 83 123 -141	1	BM 95	M		F					
209-58817-107		1	BM 95	M		F					
209-58817-109		1	BM 95	M		F					
209-58817-111		1	BM 95	M		F					
209-58817-113		1	BM 95	M		F					
209-58818- 3	164 - 16	1	DM 38	M		F					
209-58818- 5	125	1									
	164 - 15	1	DM 38	M		F					
209-58818- 7	125 - 65	1									
	357	1	DM 38	M		F					
209-58818- 9	125 - 66	1									
	357	1	DM 38	M		F					
209-58818- 11	164 - 18	1	DM 38	M		F					
209-58818- 13	164 - 19	1	DM 38	M		F					
209-58818- 15		1	DM 38	M		F					
	125 - 68	1									
209-58818- 17		1	DM 38	M		F					
	125 - 69	1									
209-58818- 19		1	DM 38	M		F					
	125 - 70	1									
209-58818- 21		1	DM 38	M		F					
	125 - 71	1									
209-58818- 27	164 - 25	1	DM 38	M		F					
209-58818- 29	164	1	DM 38	M		F					
209-58818- 35	164 - 24	1	DM 38	M		F					
209-58818- 37	164	1	DM 38	M		F					
209-58818- 39	164 - 22	1	DM 38	M		F					
209-58818- 41	164	1	DM 38	M		F					
209-58818- 43	164 - 21	1	DM 38								
209-58818- 45	164	1	DM 38								
209-58818- 47		1	DM 38	M		F					
	125	1									
209-58818- 49		1	DM 38	M		F					
	125	1									
209-58818- 51		1	DM 38	M		F					
	125	1									
209-58818- 53		1	DM 38	M		F					
	125	1									
209-58818- 55	164	1	DM 38								
209-58818- 57	164	1	DM 38	M		F					
209-58818- 59	164	1	DM 38								
209-58818- 61	164	1	DM 38								
209-58818- 63	164 165 - 18 357	1	DM 38	M		F					
209-58818- 65	164 165 - 19 357	1	DM 38	M		F					
209-58818- 67	164 165 - 15 357	1	DM 38	M		F					
209-58818- 69	164 165 - 16 357	1	DM 38	M		F					
209-58818- 71		1	DM 38	M		F					
	125	1									
209-58818- 73		1	DM 38	M		F					
	125	1									
209-58818- 75		1	DM 38	M		F					
	125	1									
209-58818- 77		1	DM 38	M		F					
	125	1									
209-58818- 79	165 - 21	1	DM 38	M		F					
209-58818- 81	165	1	DM 38	M		F					
209-58818- 83	165 - 22	1	DM 38	M		F					
209-58818- 85	165	1	DM 38	M		F					
209-58818- 87	125	1									
	357	1	DM 38	M		O					
209-58818- 89	125	1									
	357	1	DM 38	M		O					
209-58818-103		1	DM 38	M		F					
209-58818-105		1	DM 38	M		F					
209-58818-107		1	DM 38	M		F					
209-58818-109		1	DM 38	M		F					
209-58818-111		1	DM 38	M		F					
209-58818-113		1	DM 38	M		F					
209-58818-115		1	DM 38	M		F					
209-58818-117		1	DM 38	M		F					
209-58818-119		1	DM 38	M		F					
209-58818-121		1	DM 38	M		F					
209-58818-127		1	DM 38	M		F					
209-58818-129		1	DM 38	M		F					
209-58818-135		1	DM 38	M		F					
209-58818-137		1	DM 38	M		F					
209-58818-139		1	DM 38	M		F					
209-58818-141		1	DM 38	M		F					

PART NUMBER	FIGURE AND INDEX	TOTAL QTY.	MICRO-FILM NUMBER	MAINTENANCE CODE DATA: SOURCE CODE	INST'L CAPABILITY	PREINST'L CAPABILITY	RECOVERABILITY	SUPPORT EQUIPMENT	FEDERAL STOCK NUMBER DATA: COGNIZANCE CODE	FEDERAL STOCK NUMBER	MFG. CODE (TSMC)
209-58818-143		1	DM 38								
209-58818-145		1	DM 38	M		F					
209-58818-147		1	DM 38	M		F					
209-58818-149		1	DM 38	M		F					
209-58818-151		1	DM 38	M		F					
209-58818-153		1	DM 38	M		F					
209-58818-155		1	DM 38	M		F					
209-58818-157		1	DM 38	M		F					
209-58818-159		1	DM 38	M		F					
209-58818-161		1	DM 38	M		F					
209-58818-163		1	DM 38	M		F					
209-58818-165		1	DM 38	M		F					
209-58818-167		1	DM 38	M		F					
209-58818-169		1	DM 38	M		F					
209-58818-171		1	DM 38	M		F					
209-58818-173		1	DM 38	M		F					
209-58818-175		1	DM 38	M		F					
209-58818-177		1	DM 38	M		F					
209-58818-179		1	DM 38	M		F					
209-58818-181		1	DM 38	M		F					
209-58818-183		1	DM 38	M		F					
209-58818-185		1	DM 38	M		F					
209-58818-187		1	DM 38	M		O					
209-58818-189		1	DM 38	M		O					
209-58819- 5	163 - 39	1	BM 62	M		F					
209-58819- 7	163 - 57	1	BM 62	M		F					
209-58819- 11	163 - 42	1	BM 62	M		F					
209-58819- 13	158 - 62	1	BM 62	M		F					
	159 - 24	1									
209-58819- 15	158 - 63	1	BM 62	M		F					
	159 - 25	1									
209-58819- 17		1	BM 62								
209-58819- 19		1	BM 62								
209-58819- 21		1	BM 62								
209-58819- 23		1	BM 62								
209-58819- 25		1	BM 62								
209-58819- 27	163 - 51	1	BM 62	M		F					
209-58819- 29	163 - 50	1	BM 62	M		F					
209-58819- 31	163 - 53	1	BM 62	M		F					
209-58819- 33	134 -107	1	BM 62	M		F					
	135 - 78										
209-58819- 35	134 -108	1	BM 62	M		F					
	135 - 79										
209-58819- 37	163 - 55	1	BM 62	M		F					
209-58819- 39	163 - 52	1	BM 62	M		F					
209-58819- 41	163	1	BM 62	M		F					
209-58819-103		1	BM 62								
209-58819-105		1	BM 62	M		F					
209-58819-107		1	BM 62	M		F					
209-58819-109		1	BM 62								
209-58819-111		1	BM 62	M		F					
209-58819-127		1	BM 62	M		F					
209-58819-129		1	BM 62	M		F					
209-58819-131		1	BM 62	M		F					
209-58819-133		1	BM 62	M		F					
209-58819-135		1	BM 62	M		F					
209-58819-137		1	BM 62	M		F					
209-58819-139		1	BM 62	M		F					
209-58819-141		1	BM 62	M		F					
209-58820- 3	123 - 75	1	DH155	M		F					
209-58820- 5	123 - 99	1	DH155	M		F					
209-58820- 7	123 -102	1	DH155	M		F					
209-58820- 9	123 - 76	1	DH155	M		F					
209-58820- 11	123 -100	1	DH155	M		F					
209-58820- 13	123 -103	1	DH155	M		F					
209-58820- 15	123 - 44	1	DH155	M		F					
209-58820- 17	123 - 54	1	DH155	M		F					
209-58820- 19	123 - 42	1	DH155	M		F					
209-58820- 21	123 - 63	1	DH155	M		F					
209-58820- 23	123 - 78	1	DH155	M		F					
209-58820- 25	123 - 45	1	DH155	M		F					
209-58820- 27	123 - 53	1	DH155	M		F					
209-58820- 29	123 - 38	1	DH155	M		F					
209-58820- 31		1	DH155	M		F					
	125 - 48	1									
209-58820- 33		1	DH155	M		F					
	125 - 38	1									
209-58820- 35		1	DH155	M		F					
	125 - 35	1									
209-58820- 37		1	DH155	M		F					
	125 - 32	1									
209-58820- 39	125 - 31	1	DH155	M		F					
209-58820- 41		1	DH155	M		F					
	125 - 34	1									
209-58820- 43		1	DH155	M		F					
	125 - 37	1									
209-58820- 45		1	DH155	M		F					
	125 - 47	1									
209-58820- 47	123 - 77	1	DH155	M		F					
209-58820- 49	123 - 65	1	DH155	M		F					
209-58820- 51	154 - 83	1	DH155	M		F					
209-58820- 53	154 - 71	1	DH155	M		F					
209-58820- 55	154 - 72	1	DH155	M		F					
209-58820- 57	154 - 55	1									
209-58820- 59	154 - 56	1	DH155	M		F					
209-58820- 61	154 - 64	1	DH155	M		F					
209-58820- 63	154 - 65	1	DH155	M		F					
209-58820- 65	123 - 33	1	DH155	M		F					
209-58820- 67	123 - 35	1	DH155	M		F					
209-58820- 69	123 - 37	1	DH155	M		F					
209-58820- 71	123 - 39	1	DH155	M		F					
209-58820- 79	154 - 81	1	DH155	M		O					
209-58820-103		1	DH155	M		F					
209-58820-105		1	DH155	M		F					
209-58820-107		1	DH155	M		F					

PART NUMBER	FIGURE AND INDEX	TOTAL QTY.	MICRO-FILM NUMBER	MAINTENANCE CODE DATA: SOURCE CODE	INST'L CAPABILITY	PREINST'L CAPABILITY	RECOVERABILITY	SUPPORT EQUIPMENT	FEDERAL STOCK NUMBER DATA: COGNIZANCE CODE	FEDERAL STOCK NUMBER	MFG. CODE (TSMC)
209-58820-109		1	DH155	M		F					
209-58820-111		1	DH155	M		F					
209-58820-113		1	DH155	M		F					
209-58820-115		1	DH155	M		F					
209-58820-117		1	DH155	M		F					
209-58820-119		1	DH155	M		F					
209-58820-121		1	DH155	M		F					
209-58820-123		1	DH155	M		F					
209-58820-125		1	DH155	M		F					
209-58820-127		1	DH155	M		F					
209-58820-129		1	DH155	M		F					
209-58820-131		1	DH155	M		F					
209-58820-133		1	DH155	M		F					
209-58820-135		1	DH155	M		F					
209-58820-137		1	DH155	M		F					
209-58820-139		1	DH155	M		F					
209-58820-141		1	DH155	M		F					
209-58820-143		1	DH155	M		F					
209-58820-145		1	DH155	M		F					
209-58820-147		1	DH155	M		F					
209-58820-149		1	DH155	M		F					
209-58820-151		1	DH155	M		F					
209-58820-153		1	DH155	M		F					
209-58820-155		1	DH155	M		F					
209-58820-157		1	DH155	M		F					
209-58820-159		1	DH155	M		F					
209-58820-161		1	DH155	M		F					
209-58820-163		1	DH155	M		F					
209-58820-165		1	DH155	M		F					
209-58820-167		1	DH155	M		F					
209-58820-169		1	DH155	M		O					
209-58820-171		1	DH155	M		O					
209-58820-173		1	DH155	M		O					
209-58821- 3	122 - 68	1	DH 86	M		F					
	123 -126										
209-58821- 5	122 - 70	1	DH 86	M		F					
	123 -128										
209-58821- 7	122 - 69	1	DH 86	M		F					
	123 -127										
209-58821- 9	122 - 67	1	DH 86	M		F					
	123 -129										
209-58821- 11	122 - 64	1	DH 86	M		F					
	123 -122										
209-58821- 13	122 - 65	1	DH 86	M		F					
209-58821- 15	142 - 5	1	DH 86	M		F					
209-58821- 17		1	DH 86								
209-58821- 19	164 - 8	1	DH 86	M		F					
	165 - 6										
209-58821- 21	164 - 7	1	DH 86	M		F					
	165 - 7										
209-58821- 23	144 - 5	1	DH 86	M		F					
209-58821- 25	143 - 41	1	DH 86	M		F					
209-58821- 27	143 - 5	1	DH 86	M		F					
209-58821- 29		1	DH 86	M		F					
209-58821- 31		1	DH 86	M		F					
209-58821- 33	122 - 54	1	DH 86	M		F					
	123 -112										
209-58821- 35	141 - 32	1	DH 86	M		F					
209-58821- 37	123 -123	1	DH 86	M		O					
209-58821-103		1	DH 86	M		F					
209-58821-105		1	DH 86	M		F					
209-58821-107		1	DH 86	M		F					
209-58821-109		1	DH 86	M		F					
209-58821-111		1	DH 86	M		F					
209-58821-113		1	DH 86	M		F					
209-58821-115		1	DH 86	M		F					
209-58821-117		1	DH 86								
209-58821-119		1	DH 86	M		F					
209-58821-121		1	DH 86	M		F					
209-58821-123		1	DH 86	M		F					
209-58821-125		1	DH 86	M		F					
209-58821-127		1	DH 86	M		F					
209-58821-129		1	DH 86	M		F					
209-58821-131		1	DH 86	M		F					
209-58821-135		1	DH 86	M		F					
209-58821-137		1	DH 86	M		O					
209-58822- 3	123 - 29	1	DH156	M		F					
	358										
209-58822- 5	123 - 26	1	DH156	M		F					
	358										
209-58822- 7	123 - 29	1	DH156	M		F					
	358										
209-58822- 9	123 - 22	1	DH156	M		F					
	358										
209-58822- 11	123 - 25	1	DH156	M		F					
	358										
209-58822- 13	123 - 28	1	DH156	M		F					
	358										
209-58822- 15	162 - 10	1	DH156	M		F					
	358										
209-58822- 17	162 - 14	1	DH156	M		F					
	358										
209-58822- 19	154 - 45	1	DH156	M		F					
	358										
209-58822- 21	154 - 12	1	DH156	M		F					
	358										
209-58822- 23	154 - 37	1	DH156	M		F					
	358										
209-58822- 25	154 - 44	1	DH156	M		F					
	154 - 85										
	358										
209-58822- 27	154 - 84	1	DH156	M		F					
	358										
209-58822- 29	134 - 61	1	DH156	M		F					
	154 - 88										

PART NUMBER	FIGURE AND INDEX	TOTAL QTY.	MICRO-FILM NUMBER	MAINTENANCE CODE DATA: SOURCE CODE	INSTL CAPABILITY	PRE-INSTL CAPABILITY	RECOVERABILITY	SUPPORT EQUIPMENT	COGNIZANCE CODE	FEDERAL STOCK NUMBER DATA: FEDERAL STOCK NUMBER	MFG. CODE (TSMC)
209-58822- 31	358 154 - 53	1	DH156	M		F					
209-58822- 33	358 134 - 32	1	DH156	M		F					
209-58822- 35	358 134 - 34	1	DH156	M		F					
209-58822- 37	358 134 - 58	1	DH156	M		F					
209-58822- 39	358 134 - 70	1	DH156	M		F					
209-58822- 41	358 134 - 69	1	DH156	M		F					
209-58822- 43	358 134 - 68	1	DH156	M		F					
209-58822- 45	358 134 - 60 154 - 86	1	DH156	M		F					
209-58822- 47	358 134 - 31	1	DH156	M		F					
209-58822- 49	358 134 - 33	1	DH156	M		F					
209-58822- 51	358 134 - 48	1	DH156	M		F					
209-58822- 53	358 134 - 35	1	DH156	M		F					
209-58822- 55	358 134 - 46 154 - 85	1	DH156	M		F					
209-58822- 57	358 134 - 47	1	DH156	M		F					
209-58822- 59	358 125	1	DH156	M		F					
209-58822- 61	358 125	1	DH156	M							
209-58822- 63	358 134 - 57 162 - 18	1	DH156	M		O					
209-58822- 65	358 123 - 31	1	DH156	M		O					
209-58822- 67	358 154 - 5	1	DH156	M		O					
209-58822- 69	358 125	1	DH156	M		O					
209-58822-103	358	1	DH156	M		F					
209-58822-105		1	DH156	M		F					
209-58822-107		1	DH156	M		F					
209-58822-109		1	DH156	M		F					
209-58822-111		1	DH156	M		F					
209-58822-113		1	DH156	M		F					
209-58822-115		1	DH156	M		F					
209-58822-117		1	DH156	M		F					
209-58822-119		1	DH156	M		F					
209-58822-121		1	DH156	M		F					
209-58822-123		1	DH156	M		F					
209-58822-125		1	DH156	M		F					
209-58822-127		1	DH156	M		F					
209-58822-129		1	DH156	M		F					
209-58822-131		1	DH156	M		F					
209-58822-133		1	DH156	M		F					
209-58822-135		1	DH156	M		F					
209-58822-137		1	DH156	M		F					
209-58822-139		1	DH156	M		F					
209-58822-141		1	DH156	M		F					
209-58822-143		1	DH156	M		F					
209-58822-145		1	DH156	M		F					
209-58822-147		1	DH156	M		F					
209-58822-149		1	DH156	M		F					
209-58822-151		1	DH156	M		F					
209-58822-153		1	DH156	M		F					
209-58822-155		1	DH156	M		F					
209-58822-157		1	DH156	M		F					
209-58822-159		1	DH156	M		F					
209-58822-161		1	DH156	M		F					
209-58822-163		1	DH156	M		O					
209-58822-165		1	DH156	M		O					
209-58822-167		1	DH156	M		O					
209-58822-169		1	DH156	M		O					
209-58824- 3	143 - 47	1	DH157	M		F					
209-58824- 5	144 - 9	1	DH157	M		F					
209-58824- 11	122 - 76	1	DH157	M		F					
209-58824- 13	122 - 77	1	DH157	M		F					
209-58824- 15	122 - 74	1	DH157								
209-58824- 17	122 - 75	1	DH157	M		F					
209-58824- 23		1	DH157	M		F					
209-58824- 24	163	1	DH157								
209-58824- 27	142 - 7	1	DH157	M		F					
209-58824- 29	122 - 71 123 -129	1	DH157	M		F					
209-58824- 31	164 - 12 165 - 12	1	DH157	M		F					
209-58824- 33	164 - 13 165 - 13	1	DH157	M		F					
209-58824- 35	134 - 26 135 - 23	1	DH157	M		F					
209-58824- 37	124 -115 134 - 27 135 - 24	1	DH157	M		F					
209-58824- 41		1	DH 15	M		F					
209-58824- 43	163 - 87	1	DH157	M		F					
209-58824- 45	126 - 82 127 -108	1	DH157	M		F					
209-58824- 47	126 - 84 127 -110	1	DH157	M		F					
209-58824- 49	126 - 79	1	DH157	M		F					

PART NUMBER	FIGURE AND INDEX	TOTAL QTY.	MICRO-FILM NUMBER	MAINTENANCE CODE DATA: SOURCE CODE	INSTL CAPABILITY	PRE-INSTL CAPABILITY	RECOVERABILITY	SUPPORT EQUIPMENT	COGNIZANCE CODE	FEDERAL STOCK NUMBER DATA: FEDERAL STOCK NUMBER	MFG. CODE (TSMC)
	127 -105										
209-58824- 51	126 - 80 127 -106	1	DH157								
209-58824- 55	135 - 25	1	DH157	M		F					
209-58824- 57	126 - 85	1	DH157	M		F					
209-58824- 59	124 -120	1	DH157	M		F					
209-58824- 61	124 -116	1	DH157	M		F					
209-58824- 63	126 - 87 127 -113	1	DH157	M		F					
209-58824- 65	144 - 8	1	DH157	M		F					
209-58824- 67	143 - 46	1	DH157	M		F					
209-58824- 69	141	1	DH157	M		F					
209-58824- 71	141 - 34	1	DH157	M		F					
209-58824- 73	122 123 -132	1	DH157	M		F					
209-58824- 75	122 123 -133	1	DH157	M		F					
209-58824- 77	122 123 -134	1	DH157								
209-58824- 79	122 123 -135	1	DH157	M		F					
209-58824- 81	124	1	DH157	M		F					
209-58824- 83	127 -111	1	DH157	M		F					
209-58824- 85	127	1	DH157	M		F					
209-58824- 87	134 - 28 135	1 1	DH157	M		F					
209-58824- 89	127	1	DH157	M		F					
209-58824- 91	127	1	DH157	M		F					
209-58824- 93	124	1	DH157	M		O					
209-58824- 95	127 -112	1	DH157	M		O					
209-58824-103		1	DH157	M		F					
209-58824-105		1	DH157	M		F					
209-58824-107		1	DH157								
209-58824-109		1	DH157								
209-58824-111		1	DH157	M		F					
209-58824-113		1	DH157	M		F					
209-58824-115		1	DH157	M		F					
209-58824-117		1	DH157	M		F					
209-58824-123		1	DH157	M		F					
209-58824-127		1	DH157	M		F					
209-58824-129		1	DH157	M	F						
209-58824-131		1	DH157	M		F					
209-58824-133		1	DH157	M		F					
209-58824-135		1	DH157	M		F					
209-58824-137		1	DH157	M		F					
209-58824-141		1	DH157	M		F					
209-58824-143		1	DH157	M		F					
209-58824-145		1	DH157	M		F					
209-58824-147		1	DH157	M		F					
209-58824-149		1	DH157	M		F					
209-58824-151		1	DH157	M		F					
209-58824-155		1	DH157	M		F					
209-58824-157		1	DH157	M		F					
209-58824-159		1	DH157	M		F					
209-58824-161		1	DH157	M		F					
209-58824-163		1	DH157	M		F					
209-58824-165		1	DH157	M		F					
209-58824-167		1	DH157	M		F					
209-58824-169		1	DH157	M		F					
209-58824-171		1	DH157	M		F					
209-58824-173		1	DH157	M		F					
209-58824-175		1	DH157								
209-58824-177		1	DH157	M		F					
209-58824-179		1	DH157	M		F					
209-58824-181		1	DH157	M		F					
209-58824-183		1	DH157	M		F					
209-58824-185		1	DH157	M		F					
209-58824-187		1	DH157	M		F					
209-58824-189		1	DH157	M		F					
209-58824-191		1	DH157	M		F					
209-58824-193		1	DH157	M		O					
209-58824-195		1	DH157	M		O					
209-58828- 3		1	DM 39	M		O					
	125	1									
209-58828- 5		1	DM 39	M		O					
209-58828- 7		1	DM 39	M		O					
	125	1									
209-58828- 9		1	DM 39	M		O					
	125	1									
209-58828- 11	165	1	DM 39	M		F					
209-58828- 13	165	1	DM 39	M		F					
209-58828- 15	165	1	DM 39	M		F					
209-58828- 17	165	1	DM 39	M		F					
209-58828-103		1	DM 39	M		O					
209-58828-105		1	DM 39	M		O					
209-58828-107		1	DM 39	M		O					
209-58828-109		1	DM 39	M		O					
209-58828-111		1	DM 39	M		F					
209-58828-113		1	DM 39	M		F					
209-58828-115		1	DM 39	M		F					
209-58828-117		1	DM 39	M		F					
209-58834		1	DH158	M		O					
209-58834- 3	127	1	DH158	M		O					
209-58834- 5	127	1	DH158	M		O					
209-58834-103		1	DH158	M		O					
209-58834-105		1	DH158	M		O					
209-58835- 3	143	1	CU253	M		F					
209-58835- 5	158 - 66	1	CU253	M		F					
209-58835- 7	158 - 65	1	CU253	M		F					
209-58835- 9	135 - 94 150 - 45	1	CU253	M		F					
209-58835- 11	135 - 91	1	CU253	M		F					
209-58835- 13	135 - 93	1	CU253	M		F					
209-58835- 15	135 - 92	1	CU253	M		F					
209-58835- 17	135 - 82	1	CU253	M		F					

PART NUMBER	FIGURE AND INDEX	TOTAL QTY.	MICRO-FILM NUMBER	MAINTENANCE CODE DATA: SOURCE CODE	INST'L CAPABILITY	PRE-INST'L CAPABILITY	RECOVERABILITY	SUPPORT EQUIPMENT	FEDERAL STOCK NUMBER DATA: COGNIZANCE CODE	FEDERAL STOCK NUMBER	MFG. CODE (TSMC)
209-58835- 19	159 - 22	1									
209-58835- 21	159 - 21	1									
209-58835- 23	134 -109	1	CU253	M		F					
	135 - 80										
209-58835- 25	134 -110	1	CU253	M		F					
	135 - 81										
209-58835- 27	159 - 16	1									
209-58835- 29	159 - 15	1									
209-58835- 31	150 - 29	1	CU253	M		F					
209-58835- 33	134 -113	1	CU253	M		F					
	135 - 84										
209-58835- 35	134 -112	1	CU253	M		F					
	135 - 83										
209-58835- 37	159 - 33	1									
209-58835- 39	159 - 32	1									
209-58835- 40	150	1									
209-58835- 45	134 -118	1	CU253	M		F					
	135 - 89										
	159										
	159 - 11	1									
209-58835- 47	134 -117	1	CU253	M		F					
	135 - 88										
	159 - 10										
209-58835- 49		1	CU253	M		F					
209-58835- 51	159 - 13	1									
209-58835- 53	159 - 12	1									
209-58835- 55	159 - 54	1									
209-58835- 57	163	1	CU253	M		F					
209-58835- 59	142	1	CU253	M		F					
209-58835- 61	141	1	CU253	M		F					
209-58835- 63	143	1	CU253	M		F					
209-58835- 65	144	1	CU253	M		F					
209-58835- 67	163	1	CU253	M		F					
209-58835- 69	142	1	CU253	M		F					
209-58835- 71	141	1	CU253	M		F					
209-58835- 73	143	1	CU253	M		F					
209-58835- 75	144	1	CU253	M		F					
209-58835- 77	134 -122	1	CU253	M		F					
	135										
209-58835- 79	134 -121	1	CU253	M		F					
	135										
209-58835- 81	134 -120	1	CU253	M		F					
	135										
209-58835- 83	134 -123	1	CU253	M		F					
	135										
209-58835- 85	134 -111	1	CU253	M		F					
	135										
209-58835- 87	159	1	CU253	M		F					
209-58835- 89	144	1	CU253	M		F					
209-58835- 91	141	1	CU253	M		F					
209-58835-103		1	CU253	M		F					
209-58835-105		1	CU253	M		F					
209-58835-107		1	CU253	M		F					
209-58835-109		1	CU253	M		F					
209-58835-111		1	CU253	M		F					
209-58835-113		1	CU253	M		F					
209-58835-115		1	CU253	M		F					
209-58835-117		1	CU253	M		F					
209-58835-119		1	CU253	M		F					
209-58835-121		1	CU253	M		F					
209-58835-123		1	CU253	M		F					
209-58835-125		1	CU253	M		F					
209-58835-127		1	CU253	M		F					
209-58835-129		1	CU253	M		F					
209-58835-131		1	CU253	M		F					
209-58835-133		1	CU253	M		F					
209-58835-135		1	CU253	M		F					
209-58835-137		1	CU253	M		F					
209-58835-139		1	CU253	M		F					
209-58835-145		1	CU253	M		F					
209-58835-147		1	CU253	M		F					
209-58835-149		1	CU253	M		F					
209-58835-151		1	CU253	M		F					
209-58835-153		1	CU253	M		F					
209-58835-155		1	CU253	M		F					
209-58835-157		1	CU253	M		F					
209-58835-159		1	CU253	M		F					
209-58835-161		1	CU253	M		F					
209-58835-163		1	CU253	M		F					
209-58835-165		1	CU253	M		F					
209-58835-167		1	CU253	M		F					
209-58835-169		1	CU253	M		F					
209-58835-171		1	CU253	M		F					
209-58835-173		1	CU253	M		F					
209-58835-175		1	CU253	M		F					
209-58835-177		1	CU253	M		F					
209-58835-179		1	CU253	M		F					
209-58835-181		1	CU253	M		F					
209-58835-183		1	CU253	M		F					
209-58835-185		1	CU253	M		F					
209-58835-187		1	CU253	M		F					
209-58835-189		1	CU253	M		F					
209-58835-191		1	CU253	M		F					
209-58836- 9	158 - 44	1	BY 72	M		F					
209-58836- 11	158 - 56	1	BY 72	M		F					
	159 - 47	1									
209-58836- 13	158 - 46	1	BY 72	M		F					
	159 - 38	1									
209-58836- 15	158 - 47	1	BY 72	M		F					
	159 - 39	1									
209-58836- 17		1	BY 72	M		F					
209-58836- 19	158 - 50	1	BY 72	M		F					
	159 - 41	1									
209-58836- 21	158 - 53	1	BY 72	M		F					
	159 - 44	1									

PART NUMBER	FIGURE AND INDEX	TOTAL QTY.	MICRO-FILM NUMBER	MAINTENANCE CODE DATA: SOURCE CODE	INST'L CAPABILITY	PRE-INST'L CAPABILITY	RECOVERABILITY	SUPPORT EQUIPMENT	FEDERAL STOCK NUMBER DATA: COGNIZANCE CODE	FEDERAL STOCK NUMBER	MFG. CODE (TSMC)
209-58836- 23	158 - 52	1	BY 72	M		F					
	159	1									
209-58836- 25	135 - 71	1	BY 72	M		F					
	158 - 55										
	159 - 48	1									
209-58836- 29	158 - 59	1	BY 72	M		F					
	159 - 49	1									
209-58836- 31	163 - 34	1	BY 72	M		F					
209-58836- 33	134 - 99	1	BY 72	M		F					
	135 - 70										
	163 -121	REF									
209-58836- 35	134 -100	1	BY 72	M		F					
	135 - 71										
	163 -122	REF									
209-58836- 37	163 - 15	1	BY 72	M		F					
209-58836- 39	163 - 29	1	BY 72	M		F					
209-58836- 41	158 - 38	1	BY 72	M		F					
209-58836- 43	158 - 37	1	BY 72	M		F					
209-58836- 45	158 - 41	1	BY 72	M		F					
209-58836- 47	158 - 40	1	BY 72	M		F					
209-58836- 49	163 - 27	1	BY 72	M		F					
209-58836- 51	135	1	BY 72	M		F					
209-58836- 53	163	1	BY 72	M		F					
209-58836- 55	135	1	BY 72	M		F					
209-58836- 57	163	1	BY 72	M		F					
209-58836- 59	158 - 58	1	BY 72	M		F					
	163										
209-58836- 61	163	1	BY 72	M		F					
209-58836- 63	134 - 98	1	BY 72	M		F					
	135										
209-58836- 65	134 - 97	1	BY 72	M		F					
	135										
209-58836- 67	163	1	BY 72	M		F					
209-58836- 69	163	1	BY 72	M		F					
209-58836- 71	135 - 96	1	BY 72	M		F					
209-58836- 73	158 - 26	1	BY 72	M		F					
209-58836- 75	158 - 27	1	BY 72	M		F					
209-58836- 77	158 - 24	1	BY 72	M		F					
209-58836- 79	163 - 97	1	BY 72	M		F					
209-58836- 81	163	1	BY 72	M		F					
209-58836- 83	158 - 43	1	BY 72	M		F					
209-58836- 85	158 - 49	1	BY 72	M		F					
	159 - 42	1									
209-58836- 87		1	BY 72	M		F					
209-58836- 89		1	BY 72	M		F					
209-58836- 91		1	BY 72	M		F					
209-58836- 93		1	BY 72	M		F					
209-58836- 95	134 -101	1	BY 72	M		F					
	135 - 72										
209-58836-109		1	BY 72	M		F					
209-58836-111		1	BY 72	M		F					
209-58836-113		1	BY 72	M		F					
209-58836-115		1	BY 72	M		F					
209-58836-117		1	BY 72								
209-58836-119		1	BY 72	M		F					
209-58836-121		1	BY 72	M		F					
209-58836-123		1	BY 72	M		F					
209-58836-125		1	BY 72	M		F					
209-58836-129		1	BY 72	M		F					
209-58836-131		1	BY 72	M		F					
209-58836-133		1	BY 72	M		F					
209-58836-135		1	BY 72	M		F					
209-58836-137		1	BY 72	M		F					
209-58836-139		1	BY 72	M		F					
209-58836-141		1	BY 72	M		F					
209-58836-143		1	BY 72	M		F					
209-58836-145		1	BY 72	M		F					
209-58836-147		1	BY 72	M		F					
209-58836-149		1	BY 72	M		F					
209-58836-151		1	BY 72	M		F					
209-58836-153		1	BY 72	M		F					
209-58836-155		1	BY 72	M		F					
209-58836-157		1	BY 72	M		F					
209-58836-159		1	BY 72	M		F					
209-58836-161		1	BY 72	M		F					
209-58836-163		1	BY 72	M		F					
209-58836-165		1	BY 72	M		F					
209-58836-167		1	BY 72	M		F					
209-58836-169		1	BY 72	M		F					
209-58836-171		1	BY 72	M		F					
209-58836-173		1	BY 72	M		F					
209-58836-175		1	BY 72	M		F					
209-58836-177		1	BY 72	M		F					
209-58836-179		1	BY 72	M		F					
209-58836-181		1	BY 72	M		F					
209-58836-183		1	BY 72	M		F					
209-58836-185		1	BY 72	M		F					
209-58836-187		1	BY 72	M		F					
209-58836-189		1	BY 72	M		F					
209-58836-191		1	BY 72	M		F					
209-58836-193		1	BY 72	M		F					
209-58836-195		1	BY 72	M		F					
209-58837- 3	163	1	CU241	M		F					
209-58837- 5	163 - 91	1	CU241	M		F					
209-58837- 7	163	1	CU241	M		F					
209-58837- 9	163 - 89	1	CU241	M		F					
209-58837- 11	141 - 70	1	CU241	M		F					
209-58837- 13	141	1	CU241	M		F					
209-58837- 15	143 - 49	1	CU241	M		F					
209-58837- 17	143	1	CU241	M		F					
209-58837- 19	144 - 11	1	CU241	M		F					
209-58837- 21	144	1	CU241	M		F					
209-58837- 23	142 - 19	1	CU241	M		F					
209-58837- 25	142	1	CU241	M		F					
209-58837- 27	142 - 36	1	CU241	M		F					

PART NUMBER	FIGURE AND INDEX	TOTAL QTY.	MICRO-FILM NUMBER	MAINTENANCE CODE DATA: SOURCE CODE	INSTL CAPABILITY	PRE-INSTL CAPABILITY	RECOVERABILITY	SUPPORT EQUIPMENT	FEDERAL STOCK NUMBER DATA: COGNIZANCE CODE	FEDERAL STOCK NUMBER	MFG. CODE (TSMC)
209-58837- 29	142	1	CU241	M		F					
209-58837- 35	141 - 72	1	CU241	M		F					
209-58837- 37	141	1	CU241	M		F					
209-58837- 39	141 - 36	1	CU241	M		F					
209-58837- 41	141	1	CU241	M		F					
209-58837- 43	142 - 14	1	CU241	M		F					
209-58837- 45	142	1	CU241	M		F					
209-58837- 55	163	1	CU241	M		O					
209-58837- 57	163 - 93	1	CU241	M		O					
209-58837- 59	141 - 75	1	CU241								
209-58837- 61	141	1	CU241								
209-58837- 62		1	CU241								
209-58837- 63	141	1	CU241	M		F					
209-58837- 65	141	1	CU241	M		F					
209-58837- 67	142	1	CU241	M		F					
209-58837- 69	142	1	CU241	M		F					
209-58837- 71	144	1	CU241	M		F					
209-58837- 73	141	1	CU241	M		F					
209-58837- 75	141	1	CU241	M		F					
209-58837- 77	142	1	CU241	M		F					
209-58837- 79	142	1	CU241	M		F					
209-58837- 81	141	1	CU241	M		F					
209-58837- 83	141	1	CU241	M		F					
209-58837-103		1	CU241	M		F					
209-58837-105		1	CU241	M		F					
209-58837-107		1	CU241	M		F					
209-58837-109		1	CU241	M		F					
209-58837-111		1	CU241	M		F					
209-58837-113		1	CU241	M		F					
209-58837-115		1	CU241	M		F					
209-58837-117		1	CU241	M		F					
209-58837-119		1	CU241	M		F					
209-58837-121		1	CU241	M		F					
209-58837-123		1	CU241	M		F					
209-58837-125		1	CU241	M		F					
209-58837-127		1	CU241	M		F					
209-58837-129		1	CU241	M		F					
209-58837-135		1	CU241	M		F					
209-58837-137		1	CU241	M		F					
209-58837-139		1	CU241	M		F					
209-58837-141		1	CU241	M		F					
209-58837-143		1	CU241	M		F					
209-58837-145		1	CU241	M		F					
209-58837-155		1	CU241	M		F					
209-58837-157		1	CU241	M		F					
209-58837-159		1	CU241								
209-58837-161		1	CU241								
209-58837-163		1	CU241	M		F					
209-58837-165		1	CU241	M		F					
209-58837-167		1	CU241	M		F					
209-58837-169		1	CU241	M		F					
209-58837-171		1	CU241	M		F					
209-58837-173		1	CU241	M		F					
209-58837-175		1	CU241	M		F					
209-58837-177		1	CU241	M		F					
209-58837-179		1	CU241	M		F					
209-58837-181		1	CU241	M		F					
209-58837-183		1	CU241	M		F					
209-58838- 9	126 - 75	1	DP101	M		F					
	127 - 97										
	134 - 3										
209-58838- 11	134 - 17	1	DP101	M		F					
	135 - 12										
209-58838- 15	135 - 3	1	DP101	M		F					
209-58838- 17	164 - 3	1	DP101	M		F					
209-58838- 19	135 - 4	1	DP101	M		F					
209-58838- 21	164 - 2	1	DP101	M		F					
	165 - 2										
209-58838- 23	135 - 10	1	DP101	M		F					
	165 - 3										
209-58838- 25	126 - 42	1	DP101	M		F					
209-58838- 27	135 - 11	1	DP101	M		F					
209-58838- 29	135	1	DP101	M		F					
209-58838- 31	135	1	DP101	M		F					
209-58838- 33	127 - 81	1	DP101	M		F					
209-58838- 35	127 - 79	1	DP101	M		F					
209-58838- 37	127 -105	1	DP101	M		F					
209-58838- 39	127 - 78	1	DP101	M		F					
209-58838- 41	127 - 68	1	DP101	M		F					
209-58838- 43	127 - 49	1	DP101	M		F					
209-58838- 45	127 - 67	1	DP101	M		F					
209-58838- 47	127 - 47	1	DP101	M		F					
209-58838- 49	127 - 50	1	DP101	M		F					
209-58838- 51	127 - 43	1	DP101	M		F					
209-58838- 53	127 - 42	1	DP101	M		F					
209-58838- 55	127 - 34	1	DP101	M		F					
209-58838- 57	127 - 3	1	DP101	M		F					
209-58838- 59	127 - 5	1	DP101	M		F					
209-58838- 61	127 -101	1	DP101	M		F					
209-58838- 63	127	1	DP101	M		F					
209-58838- 65	134 - 4	1	DP101	M		F					
209-58838- 67	134 - 5	1	DP101	M		F					
209-58838- 69		1	DP101	M		F					
209-58838- 71	134 - 6	1	DP101	M		F					
209-58838- 73	127	1	DP101	M		F					
209-58838- 75	127	1	DP101	M		F					
209-58838- 77	127	1	DP101	M		F					
209-58838- 79	135	1	DP101	M		F					
209-58838- 81	127	1	DP101	M		F					
209-58838- 83	127	1	DP101	M		O					
209-58838- 85	134 - 15	1	DP101	M		O					
209-58838- 87	134 - 16	1	DP101	M		O					
209-58838- 89	127	1	DP101	M		O					
209-58838- 91	127	1	DP101	M		O					
209-58838- 93	127	1	DP101	M		O					

PART NUMBER	FIGURE AND INDEX	TOTAL QTY.	MICRO-FILM NUMBER	MAINTENANCE CODE DATA: SOURCE CODE	INSTL CAPABILITY	PRE-INSTL CAPABILITY	RECOVERABILITY	SUPPORT EQUIPMENT	FEDERAL STOCK NUMBER DATA: COGNIZANCE CODE	FEDERAL STOCK NUMBER	MFG. CODE (TSMC)
209-58838- 95	134 - 2	1	DP101	M		O					
209-58838-109		1	DP101	M		F					
209-58838-111		1	DP101	M		F					
209-58838-115		1	DP101	M		F					
209-58838-117		1	DP101	M		F					
209-58838-119		1	DP101	M		F					
209-58838-121		1	DP101	M		F					
209-58838-123		1	DP101	M		F					
209-58838-125		1	DP101	M		F					
209-58838-127		1	DP101	M		F					
209-58838-129		1	DP101	M		F					
209-58838-131		1	DP101	M		F					
209-58838-133		1	DP101	M		F					
209-58838-135		1	DP101	M		F					
209-58838-137		1	DP101	M		F					
209-58838-139		1	DP101	M		F					
209-58838-141		1	DP101	M		F					
209-58838-143		1	DP101	M		F					
209-58838-145		1	DP101	M		F					
209-58838-147		1	DP101	M		F					
209-58838-149		1	DP101	M		F					
209-58838-151		1	DP101	M		F					
209-58838-153		1	DP101	M		F					
209-58838-155		1	DP101	M		F					
209-58838-157		1	DP101	M		F					
209-58838-159		1	DP101	M		F					
209-58838-161		1	DP101	M		F					
209-58838-163		1	DP101	M		F					
209-58838-165		1	DP101	M		F					
209-58838-167		1	DP101	M		F					
209-58838-171		1	DP101	M		F					
209-58838-173		1	DP101	M		F					
209-58838-175		1	DP101	M		F					
209-58838-177		1	DP101	M		F					
209-58838-179		1	DP101	M		F					
209-58838-181		1	DP101	M		F					
209-58838-183		1	DP101	M		O					
209-58838-185		1	DP101	M		O					
209-58838-187		1	DP101	M		O					
209-58838-189		1	DP101	M		O					
209-58838-191		1	DP101	M		O					
209-58838-193		1	DP101	M		O					
209-58838-195		1	DP101	M		O					
209-58841- 3	124 - 53	1	CU227	M		F					
209-58841- 5	124 - 87	1	CU227	M		F					
209-58841- 7	124 - 90	1	CU227	M		F					
209-58841- 11	124 - 19	1	CU227	M		F					
209-58841- 13	124 - 24	1	CU227	M		F					
209-58841- 15	124 -105	1	CU227	M		F					
209-58841- 21	124 - 51	1	CU227	M		F					
209-58841- 23	124 - 22	1	CU227	M		F					
209-58841- 25	124 - 21	1	CU227	M		F					
209-58841- 27	124 - 63	1	CU227	M		F					
209-58841- 29	124 - 56	1	CU227	M		F					
209-58841- 31	124 - 84	1	CU227								
209-58841- 33	124 - 85	1	CU227	M		F					
209-58841- 35	124	1	CU227	M		F					
209-58841- 37	124	1	CU227	M		F					
209-58841- 39	124	1	CU227	M		F					
209-58841- 41	124	1	CU227	M		F					
209-58841- 43	134 - 20	1	CU227	M		F					
209-58841- 45	124	1	CU227	M		O					
209-58841- 47	124	1	CU227	M		O					
209-58841- 49	124	1	CU227	M		O					
209-58841- 51	124	1	CU227	M		O					
209-58841- 53	124	1	CU227	M		O					
209-58841- 55	124	1	CU227	M		O					
209-58841- 57	124	1	CU227	M		O					
209-58841- 59	141	1	CU227	M		O					
209-58841-103		1	CU227	M		F					
209-58841-105		1	CU227	M		F					
209-58841-107		1	CU227	M		F					
209-58841-111		1	CU227	M		F					
209-58841-113		1	CU227	M		F					
209-58841-115		1	CU227	M		F					
209-58841-121		1	CU227	M		F					
209-58841-123		1	CU227	M		F					
209-58841-125		1	CU227	M		F					
209-58841-127		1	CU227	M		F					
209-58841-129		1	CU227	M		F					
209-58841-131		1	CU227	M		F					
209-58841-133		1	CU227	M		F					
209-58841-135		1	CU227	M		F					
209-58841-137		1	CU227	M		F					
209-58841-139		1	CU227	M		F					
209-58841-141		1	CU227	M		F					
209-58841-143		1	CU227	M		F					
209-58841-145		1	CU227	M		O					
209-58841-147		1	CU227	M		O					
209-58841-149		1	CU227	M		O					
209-58841-151		1	CU227	M		O					
209-58841-153		1	CU227	M		O					
209-58841-155		1	CU227	M		O					
209-58841-157		1	CU227	M		O					
209-58841-159		1	CU227	M		O					
209-58844- 3	164 - 46	1	DK160	M		F					
209-58844- 5	164	1	DK160	M		F					
209-58844- 7	164 - 49	1	DK160	M		F					
209-58844- 9	164	1	DK160	M		F					
209-58844- 11	164 - 48	1	DK160	M		F					
209-58844- 13	164	1	DK160	M		F					
209-58844- 15	164 - 53	1	DK160	M		F					
209-58844- 17	164	1	DK160	M		F					
209-58844- 19	164 - 38	1	DK160	M		F					
	165 - 39										

PART NUMBER	FIGURE AND INDEX	TOTAL QTY.	MICRO-FILM NUMBER	MAINTENANCE CODE DATA: SOURCE CODE	INSTL CAPABILITY	PRE-INSTL CAPABILITY	RECOVERABILITY	SUPPORT EQUIPMENT	COGNIZANCE CODE	FEDERAL STOCK NUMBER DATA: FEDERAL STOCK NUMBER	MFG. CODE (TSMC)
209-58844- 21	164	1	DK160	M		F					
209-58844- 23	164 - 39	1	DK160	M		F					
	165 - 32										
209-58844- 25	164	1	DK160	M		F					
209-58844- 27	164 - 33	1	DK160	M		F					
209-58844- 29	164	1	DK160	M		F					
209-58844- 31	164 - 35	1	DK160	M		F					
209-58844- 33	164	1	DK160	M		F					
209-58844- 35	164 - 29	1	DK160	M		F					
209-58844- 37	164	1	DK160	M		F					
209-58844- 39	164 - 27	1	DK160	M		F					
209-58844- 41	164	1	DK160	M		F					
209-58844- 43	122 - 90	1	DK160	M		F					
209-58844- 45	122 - 91	1	DK160	M		F					
209-58844- 47	122 - 92	1	DK160	M		F					
209-58844- 49	122 - 93	1	DK160	M		F					
209-58844- 51		1	DK160	M		F					
	125	1									
209-58844- 53		1	DK160	M		F					
	125	1									
209-58844- 55		1	DK160	M		F					
	125	1									
209-58844- 57		1	DK160	M		F					
	125	1									
209-58844- 59	122 - 86	1	DK160	M		F					
209-58844- 61	122 - 88	1	DK160	M		F					
209-58844- 63	164 - 44	1	DK160	M		F					
	165 - 50										
209-58844- 65	164	1	DK160	M		F					
	165										
209-58844- 67	164 - 42	1	DK160	M		F					
	165 - 49										
209-58844- 69	164	1	DK160	M		F					
209-58844- 71	164 - 34	1	DK160	M		F					
209-58844- 73	164	1	DK160	M		F					
209-58844- 75	164 - 36	1	DK160	M		F					
209-58844- 77	164	1	DK160	M		F					
209-58844- 79	164 - 30	1	DK160	M		F					
209-58844- 81	164	1	DK160	M		F					
209-58844- 83	164 - 28	1	DK160	M		F					
209-58844- 85	164	1	DK160	M		F					
209-58844- 87	164 - 61	1	DK160	M		F					
209-58844- 89	164	1	DK160	M		F					
209-58844- 91	164 - 62	1	DK160	M		F					
209-58844- 93	164	1	DK160	M		F					
209-58844-103		1	DK160	M		F					
209-58844-105		1	DK160	M		F					
209-58844-107		1	DK160	M		F					
209-58844-109		1	DK160	M		F					
209-58844-111		1	DK160	M		F					
209-58844-113		1	DK160	M		F					
209-58844-115		1	DK160	M		F					
209-58844-117		1	DK160	M		F					
209-58844-119		1	DK160	M		F					
209-58844-121		1	DK160	M		F					
209-58844-123		1	DK160	M		F					
209-58844-125		1	DK160	M		F					
209-58844-127		1	DK160	M		F					
209-58844-129		1	DK160	M		F					
209-58844-131		1	DK160	M		F					
209-58844-133		1	DK160	M		F					
209-58844-135		1	DK160	M		F					
209-58844-137		1	DK160	M		F					
209-58844-139		1	DK160	M		F					
209-58844-141		1	DK160	M		F					
209-58844-143		1	DK160	M		F					
209-58844-145		1	DK160	M		F					
209-58844-147		1	DK160	M		F					
209-58844-149		1	DK160	M		F					
209-58844-151		1	DK160	M		F					
209-58844-153		1	DK160	M		F					
209-58844-155		1	DK160	M		F					
209-58844-157		1	DK160	M		F					
209-58844-159		1	DK160	M		F					
209-58844-161		1	DK160	M		F					
209-58844-163		1	DK160	M		F					
209-58844-165		1	DK160	M		F					
209-58844-167		1	DK160	M		F					
209-58844-169		1	DK160	M		F					
209-58844-171		1	DK160	M		F					
209-58844-173		1	DK160	M		F					
209-58844-175		1	DK160	M		F					
209-58844-177		1	DK160	M		F					
209-58844-179		1	DK160	M		F					
209-58844-181		1	DK160	M		F					
209-58844-183		1	DK160	M		F					
209-58844-185		1	DK160	M		F					
209-58844-187		1	DK160	M		F					
209-58844-189		1	DK160	M		F					
209-58844-191		1	DK160	M		F					
209-58844-193		1	DK160	M		F					
209-58846		1	DR217								
209-58846- 3		1		M		O					
209-58846- 5		1		M		O					
209-58846- 7		1		M		O					
209-58846- 9		1		M		O					
209-58846- 11		1		M		O					
209-58846- 13		1		M		O					
209-58846- 15		1		M		O					
209-58846- 27	86	1									
209-58846- 29	86	1									
	154										
209-58854- 3	164 - 64	1	DK159	M		F					
209-58854- 5	164	1	DK159	M		F					
209-58854- 7	164 - 65	1	DK159	M		F					

PART NUMBER	FIGURE AND INDEX	TOTAL QTY.	MICRO-FILM NUMBER	MAINTENANCE CODE DATA: SOURCE CODE	INSTL CAPABILITY	PRE-INSTL CAPABILITY	RECOVERABILITY	SUPPORT EQUIPMENT	COGNIZANCE CODE	FEDERAL STOCK NUMBER DATA: FEDERAL STOCK NUMBER	MFG. CODE (TSMC)
209-58854- 9	164	1	DK159	M		F					
209-58854- 11	164 - 74	1	DK159	M		F					
209-58854- 13	164	1	DK159	M		F					
209-58854- 15	164 - 73	1	DK159	M		F					
209-58854- 17	164	1	DK159	M		F					
209-58854- 19	164 - 77	1	DK159	M		F					
209-58854- 21	164	1	DK159	M		F					
209-58854- 23	164 - 76	1	DK159	M		F					
209-58854- 25	164	1	DK159	M		F					
209-58854- 27	164 - 50	1	DK159	M		F					
	165 - 51										
209-58854- 29	164	1	DK159	M		F					
	165										
209-58854- 31	165	1	DK159	M		F					
209-58854- 33	165	1	DK159	M		F					
209-58854- 35		1	DK159	M		F					
	125	1									
209-58854- 37		1	DK159	M		F					
	125	1									
209-58854- 39		1	DK159	M		F					
	125	1									
209-58854- 41		1	DK159	M		F					
	125	1									
209-58854- 43	164	1	DK159	M		F					
209-58854- 45	164	1	DK159	M		F					
209-58854- 47	164	1	DK159	M		F					
209-58854- 49	164	1	DK159	M		F					
209-58854- 51	164	1	DK159	M		O					
209-58854- 53	164	1	DK159	M		O					
209-58854- 55	164	1	DK159	M		O					
209-58854- 57	164	1	DK159	M		O					
209-58854- 59	165 - 35	1	DK159	M		O					
209-58854- 61	165	1	DK159	M		O					
209-58854- 63	165 - 36	1	DK159	M		O					
209-58854- 65	165	1	DK159	M		O					
209-58854- 67	165 - 44	1	DK159	M		O					
209-58854- 69	165	1	DK159								
209-58854- 71	165 - 43	1	DK159	M		O					
209-58854- 73	165	1	DK159	M		O					
209-58854- 75	165 - 47	1	DK159	M		O					
209-58854- 77	165	1	DK159	M		O					
209-58854- 79	165 - 46	1	DK159	M		O					
209-58854- 81	165	1	DK159	M		O					
209-58854-103		1	DK159	M		F					
209-58854-105		1	DK159	M		F					
209-58854-107		1	DK159	M		F					
209-58854-109		1	DK159	M		F					
209-58854-111		1	DK159	M		F					
209-58854-113		1	DK159	M		F					
209-58854-115		1	DK159	M		F					
209-58854-117		1	DK159	M		F					
209-58854-119		1	DK159	M		F					
209-58854-121		1	DK159	M		F					
209-58854-123		1	DK159	M		F					
209-58854-125		1	DK159	M		F					
209-58854-127		1	DK159	M		F					
209-58854-129		1	DK159	M		F					
209-58854-131		1	DK159	M		F					
209-58854-133		1	DK159	M		F					
209-58854-135		1	DK159	M		F					
209-58854-137		1	DK159	M		F					
209-58854-139		1	DK159	M		F					
209-58854-141		1	DK159	M		F					
209-58854-143		1	DK159	M		F					
209-58854-145		1	DK159	M		F					
209-58854-147		1	DK159	M		F					
209-58854-149		1	DK159	M		F					
209-58854-151		1	DK159	M		O					
209-58854-153		1	DK159	M		O					
209-58854-155		1	DK159	M		O					
209-58854-157		1	DK159	M		O					
209-58854-159		1	DK159	M		O					
209-58854-161		1	DK159	M		O					
209-58854-163		1	DK159	M		O					
209-58854-165		1	DK159	M		O					
209-58854-167		1	DK159	M		O					
209-58854-171		1	DK159	M		O					
209-58854-173		1	DK159	M		O					
209-58854-175		1	DK159	M		O					
209-58854-177		1	DK159	M		O					
209-58854-179		1	DK159	M		O					
209-58854-181		1	DK159	M		O					
209-58863- 11		1									
209-58863- 63	159	1									
209-58864- 3		1	DH 18	M		F					
	125 - 75	1									
209-58864- 5		1	DH 18								
	125 - 76	1									
209-58864- 7	165 - 31	1	DH 18	M		F					
209-58864- 9	165	1	DH 18	M		F					
209-58864- 11	165 - 28	1	DH 18	M		F					
209-58864- 13	165	1	DH 18	M		F					
209-58864- 15	165 - 25	1	DH 18	M		F					
209-58864- 17	165	1	DH 18	M		F					
209-58864- 19	123 -145	1	DH 18	M		F					
209-58864- 21	123 -146	1	DH 18	M		F					
209-58864- 23	165 - 30	1	DH 18	M		F					
209-58864- 25	165	1	DH 18	M		F					
209-58864- 27	165 - 27	1	DH 18	M		F					
209-58864- 29	165	1	DH 18	M		F					
209-58864- 31	165 - 24	1	DH 18	M		F					
209-58864- 33	165	1	DH 18	M		F					
209-58864- 35	123 -148	1	DH 18	M		F					
209-58864- 37	123 -149	1	DH 18	M		F					
209-58864- 39	123 -153	1	DH 18	M		F					

PART NUMBER	FIGURE AND INDEX	TOTAL QTY.	MICRO-FILM NUMBER	MAINTENANCE CODE DATA: SOURCE CODE	INST'L CAPABILITY	PRE-INST'L CAPABILITY	RECOVERABILITY	SUPPORT EQUIPMENT	FEDERAL STOCK NUMBER DATA: COGNIZANCE CODE	FEDERAL STOCK NUMBER	MFG. CODE (TSMC)
209-58864- 41	123 -154	1	DH 18	M		F					
209-58864- 43	123 -143	1	DH 18	M		F					
209-58864- 45	123 -144	1	DH 18	M		F					
209-58864- 47		1	DH 18	M		F					
	125 - 77	1									
209-58864- 49		1	DH 18	M		F					
	125 - 78	1									
209-58864- 51		1	DH 18	M		F					
	125 - 73	1									
209-58864- 53		1	DH 18	M		F					
	125 - 74	1									
209-58864- 55	123 -150	1	DH 18	M		F					
209-58864- 57	123 -151	1	DH 18	M		F					
209-58864-103		1	DH 18	M		F					
209-58864-105		1	DH 18	M		F					
209-58864-107		1	DH 18	M		F					
209-58864-109		1	DH 18	M		F					
209-58864-111		1	DH 18	M		F					
209-58864-113		1	DH 18	M		F					
209-58864-115		1	DH 18	M		F					
209-58864-117		1	DH 18	M		F					
209-58864-119		1	DH 18	M		F					
209-58864-121		1	DH 18	M		F					
209-58864-123		1	DH 18	M		F					
209-58864-125		1	DH 18	M		F					
209-58864-127		1	DH 18	M		F					
209-58864-129		1	DH 18	M		F					
209-58864-131		1	DH 18	M		F					
209-58864-133		1	DH 18	M		F					
209-58864-135		1	DH 18	M		F					
209-58864-137		1	DH 18	M		F					
209-58864-139		1	DH 18	M		F					
209-58864-141		1	DH 18	M		F					
209-58864-143		1	DH 18	M		F					
209-58864-145		1	DH 18	M		F					
209-58864-147		1	DH 18	M		F					
209-58864-149		1	DH 18	M		F					
209-58864-151		1	DH 18	M		F					
209-58864-153		1	DH 18	M		F					
209-58864-155		1	DH 18	M		F					
209-58864-157		1	DH 18	M		F					
209-58865- 3	134 - 9	1	DR 13	M		O					
209-58865- 5	134 - 12	1	DR 13	M		O					
209-58865- 7	134 - 13	1	DR 13	M		O					
209-58865- 9	134 - 10	1	DR 13	M		O					
209-58865- 11	129	1	DR 13	M		O					
	134 - 11										
209-58865- 13	129 - 34	1	DR 13	M		O					
	134 - 14										
209-58865- 15	129 - 32	1	DR 13	M		O					
209-58865- 17	129 - 31	1	DR 13	M		O					
209-58865- 19	129 - 28	1	DR 13	M		O					
209-58865- 21	129	1	DR 13	M		O					
209-58865- 23	129 - 29	1	DR 13	M		O					
209-58865- 25	129	1	DR 13	M		O					
209-58865- 27	129 - 25	1	DR 13	M		O					
209-58865- 29	129	1	DR 13	M		O					
209-58865- 31	129 - 26	1	DR 13	M		O					
209-58865- 33	129	1	DR 13	M		O					
209-58865- 35	129 - 22	1	DR 13	M		O					
209-58865- 37	129	1	DR 13	M		O					
209-58865- 39	129 - 23	1	DR 13	M		O					
209-58865- 41	129	1	DR 13	M		O					
209-58865- 43	129 - 12	1	DR 13	M		O					
209-58865- 45	129	1	DR 13	M		O					
209-58865- 47	129 - 13	1	DR 13	M		O					
209-58865- 49	129	1	DR 13	M		O					
209-58865- 51	129 - 6	1	DR 13	M		F					
209-58865- 53	129	1	DR 13	M		F					
209-58865- 55	129 - 7	1	DR 13	M		F					
209-58865- 57	129	1	DR 13	M		F					
209-58865- 59		1	DR 13	M		F					
209-58865- 63		1	DR 13	M		F					
209-58865- 65		1	DR 13	M		F					
209-58865- 67		1	DR 13	M		F					
209-58865-103		1	DR 13	M		O					
209-58865-105		1	DR 13	M		O					
209-58865-107		1	DR 13	M		O					
209-58865-109		1	DR 13	M		O					
209-58865-111		1	DR 13	M		O					
209-58865-113		1	DR 13	M		O					
209-58865-115		1	DR 13	M		O					
209-58865-117		1	DR 13	M		O					
209-58865-119		1	DR 13	M		O					
209-58865-121		1	DR 13	M		O					
209-58865-123		1	DR 13	M		O					
209-58865-125		1	DR 13	M		O					
209-58865-127		1	DR 13	M		O					
209-58865-129		1	DR 13	M		O					
209-58865-131		1	DR 13	M		O					
209-58865-133		1	DR 13	M		O					
209-58865-135		1	DR 13	M		O					
209-58865-137		1	DR 13	M		O					
209-58865-139		1	DR 13	M		O					
209-58865-141		1	DR 13	M		O					
209-58865-143		1	DR 13	M		O					
209-58865-145		1	DR 13	M		O					
209-58865-147		1	DR 13	M		O					
209-58865-149		1	DR 13	M		O					
209-58865-151		1	DR 13	M		F					
209-58865-153		1	DR 13	M		F					
209-58865-155		1	DR 13	M		F					
209-58865-157		1	DR 13	M		F					
209-58866- 3	134 -106	1	BY 73	M		F					
	135 - 77										

PART NUMBER	FIGURE AND INDEX	TOTAL QTY.	MICRO-FILM NUMBER	MAINTENANCE CODE DATA: SOURCE CODE	INST'L CAPABILITY	PRE-INST'L CAPABILITY	RECOVERABILITY	SUPPORT EQUIPMENT	FEDERAL STOCK NUMBER DATA: COGNIZANCE CODE	FEDERAL STOCK NUMBER	MFG. CODE (TSMC)
209-58866- 5	134 -105	1	BY 73	M		F					
	135 - 76										
209-58866- 7		1	BY 73	M		F					
	125 -110	1									
209-58866- 9	159 - 26	1									
209-58866- 11	159 - 27	1									
209-58866- 13		1	BY 73	M		F					
	125 -111	1									
209-58866- 19		1	BY 73	M		F					
	125 -100	1									
209-58866- 21		1	BY 73	M		F					
	125 - 96	1									
209-58866- 27		1	BY 73	M		F					
	125 -101	1									
209-58866- 29	125 - 97	1									
	163 -119	REF									
		1	BY 73	M		F					
209-58866- 31	163	1	BY 73	M		F					
209-58866- 33		1	BY 73	M		F					
	125 -126	1									
209-58866- 35		1	BY 73	M		F					
	125 -115	1									
209-58866- 37		1	BY 73	M		F					
	125 -125	1									
209-58866- 39		1	BY 73	M		F					
	125 -114	1									
209-58866- 41	134 - 96	1	BY 73	M		F					
	135										
209-58866- 43	163	1	BY 73	M		F					
209-58866- 45	134 - 95	1	BY 73	M		F					
	135										
209-58866- 47	163	1	BY 73	M		F					
209-58866- 49		1	BY 73	M		F					
	125 -108	1									
209-58866- 51		1	BY 73	M		F					
	125 -104	1									
209-58866- 53		1	BY 73	M		F					
	125 -109	1									
209-58866- 55		1	BY 73	M		F					
	125 -105	1									
209-58866- 57		1	BY 73	M		F					
	125 -117	1									
209-58866- 59	159 - 50	1									
209-58866- 61	159	1	BY 73	M		O					
209-58866- 63	159	1									
		1	BY 73	M		O					
209-58866- 65		1	BY 73	M		O					
	125	1									
209-58866- 67		1	BY 73	M		O					
	125	1									
209-58866- 69		1	BY 73	M		O					
	125	1									
209-58866- 71		1	BY 73	M		O					
	125	1									
209-58866- 73		1	BY 73	M		O					
	125	1									
209-58866- 75	134	1	BY 73	M		F					
	135	1									
	135										
209-58866- 77	159	1	BY 73	M		O					
209-58866- 95		1	BY 73								
209-58866-103		1	BY 73	M		F					
209-58866-105		1	BY 73	M		F					
209-58866-107		1	BY 73	M		F					
209-58866-109		1	BY 73	M		F					
209-58866-111		1	BY 73	M		F					
209-58866-113		1	BY 73	M		F					
209-58866-119		1	BY 73	M		F					
209-58866-121		1	BY 73	M		F					
209-58866-127		1	BY 73	M		F					
209-58866-129		1	BY 73	M		F					
209-58866-131		1	BY 73	M		F					
209-58866-133		1	BY 73	M		F					
209-58866-135		1	BY 73	M		F					
209-58866-137		1	BY 73	M		F					
209-58866-139		1	BY 73	M		F					
209-58866-141		1	BY 73	M		F					
209-58866-143		1	BY 73	M		F					
209-58866-145		1	BY 73	M		F					
209-58866-147		1	BY 73	M		F					
209-58866-149		1	BY 73	M		F					
209-58866-151		1	BY 73	M		F					
209-58866-153		1	BY 73	M		F					
209-58866-155		1	BY 73	M		F					
209-58866-157		1	BY 73	M		F					
209-58866-159		1	BY 73	M		F					
209-58866-161		1	BY 73	M		O					
209-58866-163		1	BY 73	M		O					
209-58866-165		1	BY 73	M		O					
209-58866-167		1	BY 73	M		O					
209-58866-169		1	BY 73	M		O					
209-58866-171		1	BY 73	M		O					
209-58866-173		1	BY 73	M		O					
209-58866-175		1	BY 73	M		F					
209-58866-177		1	BY 73	M		O					
209-58868- 3	127	1	DH160	M		O					
209-58868- 5	127	1	DH160	M		O					
209-58868- 7	127	1	DH160	M		O					
209-58868- 9		1	DH160	M		O					
209-58868- 11	127	1	DH160	M		O					
209-58868- 15		1	DH160	M		O					
209-58868-103		1	DH160	M		O					
209-58868-105		1	DH160	M		O					
209-58868-107		1	DH160	M		O					
209-58868-109		1	DH160	M		O					

PART NUMBER	FIGURE AND INDEX	TOTAL QTY.	MICRO-FILM NUMBER	MAINTENANCE CODE DATA: SOURCE CODE	INST'L CAPABILITY	PRE-INST'L CAPABILITY	RECOVERABILITY	SUPPORT EQUIPMENT	COGNIZANCE CODE	FEDERAL STOCK NUMBER DATA: FEDERAL STOCK NUMBER	MFG. CODE (TSMC)
209-58868-111		1	DH160	M		O					
209-58868-115		1	DH160	M		O					
209-59001		1	BM101								
209-59002		1	BW111	U							
209-59010		1	BW 72	U							
209-59011		1	BW129	U							
209-59012		1	BW182	U							
209-59020	322	1	BH374	M		O					
209-59021- 1		1	BM102	M		O					
209-59021- 2		1	BM102	M		O					
209-59021- 3		1	BM102	M		O					
209-59021- 4		1	BM102	M		O					
209-59021- 8		1	BM102	M		O					
209-59021- 9		1	BM102	M		O					
209-59022		5	BH375	M		O					
209-59023	322	2	BH376	M		O					
209-59024- 3		2	CA 72	M		O					
209-59060	322 - 44	2	BM103	A		F					
	322 - 89										
209-59061	323 - 29	1	BH377	A		F					
	327										
209-59062	323 - 31	1	BH378	A		F					
	327										
209-59063	323	1	BM104	A		F					
209-59064	322 - 1	4	BM105	A		F					
	322 - 50										
209-59065- 3	320 - 18	2	BM106	A		F					
	322 - 9										
	322 - 63										
209-59065- 5	320 - 11	2	BM106	A		F					
	322 - 11										
209-59065- 7	320 - 4	3	BM106	A		F					
	322 - 5										
	322 - 55										
209-59065- 9	320 - 19	2	BM106	A		F					
	320 - 27										
	322 - 57										
209-59065- 11	320 - 9	1	BM106	A		F					
	322 - 56										
209-59080- 3	323 - 33	1	BM107	M		F					
209-59080- 5	170 - 15	1	BM107	M		F					
209-59080- 7	170 - 12	1	BM107	M		F					
209-59080- 9	323 - 32	1	BM107	M		F					
209-59080- 11	323 - 44	1	BM107	M		F					
209-59080- 13	323 - 30	1	BM107								
209-59080- 15	170 - 13	1	BM107	M		F					
209-59080-103		1	BM107	M		F					
209-59080-105		1	BM107	M		F					
209-59080-107		1	BM107								
209-59080-109		1	BM107	M		F					
209-59080-111		1	BM107	M		F					
209-59080-113		1	BM107	M		F					
209-59080-115		1	BM107	M		F					
209-59081- 3	322 - 42	1	DH 19	M		F					
209-59081- 5	322 - 43	1	DH 19	M		F					
209-59081- 7	322 - 46	1	DH 19	M		F					
209-59081- 9	322 - 48	1	DH 19	M		F					
209-59081- 17	322 - 14	1	DH 19	M		F					
209-59081- 21	322 - 17	1	DH 19	M		F					
209-59081- 29	322 - 23	1	DH 19	M		F					
209-59081- 33	322 - 26	1	DH 19	M		F					
209-59081- 35	322 - 25	1	DH 19	M		F					
209-59081- 37	322 - 22	1	DH 19	M		F					
209-59081- 39	322 - 19	1	DH 19	M		F					
209-59081- 45	320 - 12	1	DH 19	M		F					
	322 - 12										
209-59081- 47		1	DH 19								
209-59081- 49	322 - 4	1	DH 19	M		F					
209-59081- 51	322 - 2	1	DH 19	M		F					
209-59081- 53	322 - 16	1	DH 19	M		F					
209-59081- 55	320 - 6	1	DH 19	M		F					
	320 - 17										
	322 - 8										
209-59081- 57	322 - 28	1	DH 19	M		F					
209-59081- 61	322 - 10	1	DH 19	M		F					
209-59081- 63	320 - 7	1	DH 19	M		F					
	322 - 6										
209-59081-103		1	DH 19	M		F					
209-59081-105		1	DH 19	M		F					
209-59081-107		1	DH 19	M		F					
209-59081-109		1	DH 19	M		F					
209-59081-117		1	DH 19	M		F					
209-59081-121		1	DH 19	M		F					
209-59081-129		1	DH 19	M		F					
209-59081-133		1	DH 19	M		F					
209-59081-135		1	DH 19	M		F					
209-59081-137		1	DH 19	M		F					
209-59081-139		1	DH 19	M		F					
209-59081-145		1	DH 19	M		F					
209-59081-147		1	DH 19								
209-59081-149		1	DH 19	M		F					
209-59081-151		1	DH 19	M		F					
209-59081-153		1	DH 19	M		F					
209-59081-155		1	DH 19	M		F					
209-59081-157		1	DH 19	M		F					
209-59081-161		1	DH 19	M		F					
209-59081-163		1	DH 19	M		F					
209-59082- 3	322 - 90	1	BM109	M		F					
209-59082- 19	322 - 70	1	BM109	M		F					
209-59082- 21	322 - 73	1	BM109	M		F					
209-59082- 23	322 - 74	1	BM109	M		F					
209-59082- 25	322 - 68	1	BM109	M		F					
209-59082- 29	322 - 75	1	BM109	M		F					
209-59082- 31	322 - 77	1	BM109	M		F					
209-59082- 37	322 - 66	1	BM109	M		F					

PART NUMBER	FIGURE AND INDEX	TOTAL QTY.	MICRO-FILM NUMBER	MAINTENANCE CODE DATA: SOURCE CODE	INST'L CAPABILITY	PRE-INST'L CAPABILITY	RECOVERABILITY	SUPPORT EQUIPMENT	COGNIZANCE CODE	FEDERAL STOCK NUMBER DATA: FEDERAL STOCK NUMBER	MFG. CODE (TSMC)
209-59082- 39	320 - 23	1	BM109	M		F					
	322 - 64										
209-59082- 43	322 - 53	1	BM109	M		F					
209-59082- 45	322 - 54	1	BM109	M		F					
209-59082- 47	322 - 79	1	BM109	M		F					
209-59082- 51	322 - 80	1	BM109	M		F					
209-59082- 53	320 - 24	1	BM109	M		F					
	322 - 61										
209-59082- 55	322 - 59	1	BM109	M		F					
209-59082- 57	320 - 20	1	BM109	M		F					
	322 - 58										
209-59082- 59	322 - 51	1	BM109	M		F					
209-59082-103		1	BM109	M		F					
209-59082-119		1	BM109	M		F					
209-59082-121		1	BM109	M		F					
209-59082-123		1	BM109	M		F					
209-59082-125		1	BM109	M		F					
209-59082-129		1	BM109	M		F					
209-59082-131		1	BM109	M		F					
209-59082-137		1	BM109	M		F					
209-59082-139		1	BM109	M		F					
209-59082-143		1	BM109	M		F					
209-59082-145		1	BM109	M		F					
209-59082-147		1	BM109	M		F					
209-59082-151		1	BM109	M		F					
209-59082-153		1	BM109	M		F					
209-59082-155		1	BM109	M		F					
209-59082-157		1	BM109	M		F					
209-59082-159		1	BM109	M		F					
209-59102		1	BX 9	U							
209-59110		1	DG298	U							
209-59120	321 - 64	1	BM110	M		O					
209-59160	321	1	BH379	A		F					
209-59161	321	1	BM111	A		F					
209-59162	321	1	CJ392	A		F					
209-59163	321	1	BM112	A		F					
209-59164	321	1	BH381	A		F					
209-59165	321	1	DM244	A		F					
209-59166	321	1	BH382	A		F					
209-59166- 11	321	1	BH382	A		F					
209-59167	321	1	DJ 42	A		F					
209-59167- 11	321	1	DJ 42	A		F					
209-59168	321	1	BM113	A		F					
209-59168- 11	321	1	BM113	A		F					
209-59169	321	1	BH383	A		F					
209-59180- 3	321 - 9	1	BM114	M		F					
209-59180- 5	321 - 11	1	BM114	M		F					
209-59180- 7	321 - 58	2	BM114	M		F					
209-59180- 9	321 - 55	1	BM114	M		F					
209-59180- 11	321 - 54	1	BM114	M		F					
209-59180- 13	321 - 65	1	BM114	M		F					
209-59180- 15	321 - 77	1	BM114	M		F					
209-59180- 17	321 - 47	1	BM114	M		F					
209-59180- 19	320 - 48	1	BM114	M		F					
209-59180-103		1	BM114	M		F					
209-59180-105		1	BM114	M		F					
209-59180-107		1	BM114	M		F					
209-59180-109		1	BM114	M		F					
209-59180-111		1	BM114	M		F					
209-59180-113		1	BM114	M		F					
209-59180-115		1	BM114	M		F					
209-59180-117		1	BM114	M		F					
209-59180-119		1	BM114	M		F					
209-59181- 3	321 - 73	1	DH 20	M		F					
209-59181- 5	321 - 70	1	DH 20	M		F					
209-59181- 7	321 - 38	1	DH 20	M		F					
209-59181- 9	321 - 31	1	DH 20	M		F					
209-59181- 11	321 - 26	1	DH 20	M		F					
209-59181- 13	321 - 24	1	DH 20	M		F					
209-59181- 15	321 - 20	1	DH 20	M		F					
209-59181- 19	321 - 17	1	DH 20	M		F					
209-59181- 21	320 - 45	1	DH 20	M		F					
209-59181- 23	320 - 37	1	DH 20	M		F					
209-59181- 27	321 - 78	1	DH 20	M		F					
209-59181- 31	321 - 19	1	DH 20	M		F					
209-59181- 33	320 - 43	1	DH 20	M		F					
209-59181- 35	320 - 40	1	DH 20	M		F					
209-59181- 39	321 - 68	1	DH 20	M		F					
209-59181- 41	321 - 76	1	DH 20	M		F					
209-59181- 43	320 - 26	1	DH 20	M		F					
	321 - 12										
209-59181- 45	320 - 15	1	DH 20	M		F					
209-59181- 47	320 - 25	1	DH 20	M		F					
	321 - 13										
209-59181- 49	320 - 38	1	DH 20	M		F					
209-59181- 51	320 - 2	1	DH 20	M		F					
209-59181- 53	320 - 1	1	DH 20	M		F					
209-59181- 55	320 - 35	1	DH 20	M		F					
209-59181- 57	320 - 34	1	DH 20	M		F					
209-59181- 59	320 - 33	1	DH 20	M		F					
209-59181- 61	320 - 10	1	DH 20	M		F					
209-59181- 63	320 - 32	1	DH 20	M		F					
	321										
209-59181- 65	320 - 30	1	DH 20	M		F					
209-59181- 67	320 - 28	1	DH 20	M		F					
209-59181- 69	320 - 9	1	DH 20	M		F					
209-59181- 71	320 - 21	1	DH 20	M		F					
209-59181- 73	320 - 46	1	DH 20	M		O					
209-59181- 75		1	DH 20	M		O					
209-59181- 77	320 - 44	1	DH 20	M		O					
209-59181- 79	320 - 16	1	DH 20	M		O					
209-59181- 81	320 - 13	1	DH 20	M		O					
209-59181- 83	320 - 3	1	DH 20	M		O					
209-59181- 85	321 - 27	1	DH 20	M		O					
209-59181- 87	321 - 36	1		M		O					

PART NUMBER	FIGURE AND INDEX	TOTAL QTY.	MICRO-FILM NUMBER	MAINTENANCE CODE DATA: SOURCE CODE	INSTL CAPABILITY	PRE-INST'L CAPABILITY	RECOVERABILITY	SUPPORT EQUIPMENT	COGNIZANCE CODE	FEDERAL STOCK NUMBER DATA: FEDERAL STOCK NUMBER	MFG. CODE (TSMC)
209-59181-103		1	DH 20	M		F					
209-59181-105		1	DH 20	M		F					
209-59181-107		1	DH 20	M		F					
209-59181-109		1	DH 20	M		F					
209-59181-111		1	DH 20	M		F					
209-59181-113		1	DH 20	M		F					
209-59181-115		1	DH 20	M		F					
209-59181-119		1	DH 20	M		F					
209-59181-121		1	DH 20	M		F					
209-59181-123		1	DH 20	M		F					
209-59181-127		1	DH 20	M		F					
209-59181-131		1	DH 20	M		F					
209-59181-133		1	DH 20	M		F					
209-59181-135		1	DH 20	M		F					
209-59181-139		1	DH 20	M		F					
209-59181-141		1	DH 20	M		F					
209-59181-143		1	DH 20	M		F					
209-59181-145		1	DH 20	M		F					
209-59181-147		1	DH 20	M		F					
209-59181-149		1	DH 20	M		F					
209-59181-151		1	DH 20	M		F					
209-59181-153		1	DH 20	M		F					
209-59181-155		1	DH 20	M		F					
209-59181-157		1	DH 20	M		F					
209-59181-159		1	DH 20	M		F					
209-59181-161		1	DH 20	M		F					
209-59181-163		1	DH 20	M		F					
209-59181-165		1	DH 20	M		F					
209-59181-167		1	DH 20	M		F					
209-59181-169		1	DH 20	M		F					
209-59181-171		1	DH 20	M		F					
209-59181-173		1	DH 20	M		O					
209-59181-175		1	DH 20	M		O					
209-59181-177		1	DH 20	M		O					
209-59181-179		1	DH 20	M		O					
209-59181-181		1	DH 20	M		O					
209-59181-183		1	DH 20	M		O					
209-59181-185		1	DH 20	M		O					
209-59181-187		1	DH 20	M		O					
209-59802- 13	323 - 34	1									
209-61002- 1		1	BW162	U							
209-61002- 2		1	BW162	U							
209-61004		1	CM188	U							
209-61008		1		U							
209-61010- 1	331 - 31	2	BW171	P1	F	O	R		R	1005-300-4346	B210
209-61010- 2	331	2	BW171	P1	F	O	R		R	1005-032-1414	B210
209-61010- 3	331	8	BW171	M		O					
209-61010- 11	331	2	BW171	P1	F	O	R		R	1005-694-9246	ANAA
209-61010- 12	331	2	BW171	P1	F	O	R		R	1005-694-9247	B210
209-61011	331 - 3	4	BW132	X1							
209-61011- 3		4	BW132	M		O					
209-61011- 4		4	BW132	M		O					
209-61011- 5		4	BW132	M		O					
209-61011- 6		4	BW132	M		O					
209-61011- 11		4	BW132	M		O					
209-61011- 13		8	BW132	M		O					
209-61011- 17		4	BW132	M		O					
209-61011- 19		8	BW132	M		O					
209-61011- 21		4	BW132	M		O					
209-61011- 22		4	BW132	M		O					
209-61011- 23		4	BW132	M		O					
209-61011- 24		4	BW132	M		O					
209-61011- 25		4	BW132	M		O					
209-61011- 27		4	BW132	M		O					
209-61011- 29		4	BW132	M		O					
209-61011- 31		4	BW132	M		O					
209-61011- 37		4	BW132	M		O					
209-61011- 39	331 - 33	4	BW132	M		O					
209-61011- 41		4	BW132	M		O					
209-61011- 43		4	BW132	M		O					
209-61011- 45		4	BW132	M		O					
209-61011- 47		4	BW132	M		O					
209-61011- 48		4	BW132	M		O					
209-61011- 51	331	4	BW132	X1							
209-61011- 53		4	BW132	M		O					
209-61011- 54		4	BW132	M		O					
209-61014	331	8	DR102	M		O					
209-61014- 3		8	DR102	M		O					
209-61014- 5		8	DR102	M		O					
209-61014- 7		16	DR102	M		O					
209-61015		2	BW333	M		O					
209-61027- 1	331 - 28	1	BW 67	P	F	O	S		R	1005-032-1415	B210
209-61027- 2	331	1	BW 67	P	F	O	S		R	1005-032-1416	B210
209-61027- 3		2	BW 67	M		O					
209-61027- 4		1	BW 67	M		O					
209-61027- 5		1	BW 67	M		O					
209-61027- 6		1	BW 67	M		O					
209-61027- 11		1	BW 67	M		O					
209-61027- 12		1	BW 67	M		O					
209-61027- 13		1	BW 67	M		O					
209-61027- 14		1	BW 67	M		O					
209-61027- 17		1	BW 67	M		O					
209-61027- 18		1	BW 67	M		O					
209-61027- 19		1	BW 67	M		O					
209-61027- 20		1	BW 67	M		O					
209-61027- 21		2	BW 67	M		O					
209-61030- 1	331 - 27	1	BW186	P	F	O	S		R	1005-032-1417	B210
209-61030- 2	331	1	BW186	P	F	O	S		R	1005-032-1418	B210
209-61030- 3		1	BW186	M		O					
209-61030- 4		1	BW186	M		O					
209-61030- 5		1	BW186	M		O					
209-61030- 6		1	BW186	M		O					
209-61030- 11		1	BW186	M		O					
209-61030- 12		1	BW186	M		O					
209-61030- 13		1	BW186	M		O					
209-61030- 14		1	BW186	M		O					
209-61030- 19		1	BW186	M		O					
209-61030- 20		1	BW186	M		O					
209-61030- 21		1	BW186	M		O					
209-61030- 22		1	BW186	M		O					
209-61030- 23		1	BW186	M		O					
209-61030- 24		1	BW186	M		O					
209-61030- 25		1	BW186	M		O					
209-61030- 26		1	BW186	M		O					
209-61030- 27		1	BW186	M		O					
209-61030- 28		1	BW186	M		O					
209-61035- 1	331 - 7	1	BW136								
209-61035- 2	331	1	BW136								
209-61035- 3	331	1									
		1	BW136	X2							
209-61035- 4	331	1									
		1	BW136	X2							
209-61036	331	2	BH384	M		O					
209-61037	331	2	BH385	M		O					
209-61038	328	AR		M		O					
209-61039- 1		1	CE 39	M		O					
209-61039- 2		1	CE 39	M		O					
209-61041		2	BH386	M		O					
209-61042- 1		1	BH387	M		O					
209-61042- 2		1	BH387	M		O					
209-61044		2	BH388	M		O					
209-61048- 1		1	BH389	M		O					
209-61048- 2		1	BH389	M		O					
209-61048- 3		1	BW145	X1							
209-61048- 4		1	BW145	X1							
209-61048- 11	331 - 3	1	BW145	X2							
209-61048- 12	331	1	BW145	X2							
209-61049- 3		2	BX 5	X1							
209-61049- 11	331 - 1	2	BX 5	X2							
209-61050- 3	331 - 5	1	CD 24	X2							
209-61050- 4	331	1	CD 24	X2							
209-61054- 3		2	CA125						R	1005-032-1419	B210
209-61054- 4		2	CA125						R	1005-032-1420	B210
209-61054- 5	329 - 10	2	CA125	X1					R	1005-338-0130	B210
	329 - 29										
209-61054- 6	329	2	CA125	X1					R	1005-338-0131	B210
209-61055	329 - 15	4	BM117	M		O					
209-61070- 9		2	CM204	M		O					
209-61070- 13		1	CM204	M		O					
209-61070- 14		1	CM204	M		O					
209-61070- 21		1	CM204	M		O					
209-61070- 22		1	CM204	M		O					
209-61071- 9		1	BY202	M		O					
209-61071- 13		1	BY202	M		O					
209-61071- 14		1	BY202	M		O					
209-61071- 21		1	BY202	M		O					
209-61071- 22		1	BY202	M		O					
209-61072- 7		2	CA 61	M		O					
209-61072- 9		1	CA 61	M		O					
209-61072- 10		1	CA 61	M		O					
209-61072- 21		1	CA 61	M		O					
209-61072- 22		1	CA 61	M		O					
209-61073- 7		2	CM207	M		O					
209-61073- 9		1	CM207	M		O					
209-61073- 10		1	CM207	M		O					
209-61073- 21		1	CM207	M		O					
209-61073- 22		1	CM207	M		O					
209-61112- 1	331 - 36	2	BW150	M		O					
209-61112- 2	331	2	BW150	M		O					
209-61112- 3		2	BW150	M		O					
209-61112- 4		2	BW150	M		O					
209-61112- 5		4	BW150	M		O					
209-61112- 7		8	BW150	M		O					
209-61112- 9		4	BW150	M		O					
209-61112- 11		4	BW150	M		F					
209-61112- 13		1	BW150	M		O					
209-61112- 14		1	BW150	M		O					
209-61114- 1	43 - 38	1	BM121	M		O					
209-61114- 3		1	BM121	M		O					
209-61114- 5		1	BM121	M		O					
209-61115	43	1	BM122	M		O					
209-61115- 3		1	BM122	M		O					
209-61115- 5	43	1	BM122	M		O					
209-61115- 7		1	BM122	M		O					
209-61116		1	BV286	M		O					
209-61116- 3		1	BV286	X1							
209-61116- 5	43	1	BV286	X1							
209-61116- 7		1	BV286	X1							
209-61117	43	1	BY203	M		O					
209-61117- 3		1	BY203	M		O					
209-61117- 5	43	1	BY203	M		O					
209-61117- 7		1	BY203	M		O					
209-61118- 1	43 - 37	1	BY204	M		O					
209-61118- 3		1	BY204	M		O					
209-61118- 5		1	BY204	M		O					
209-61119- 5		1	DJ163	X1							
209-61119- 7		1	DJ163	X1							
209-61119- 11	43 - 40	1	DJ163	P	O	O	C		R	1560-570-2326	ANAA
209-61120- 1	43 - 51	1	DK 92	P	O	O	C		R	1560-570-2327	ANAA
209-61120- 2	43	1	DK 92	P	O	O	C		R	1560-570-2328	ANAA
209-61120- 3		1	DK 92	X1							
209-61120- 4		1	DK 92	X1							
209-61120- 5		1	DK 92	X1							
209-61120- 6		1	DK 92	X1							
209-61120- 7		1	DK 92	M		O					
209-61120- 8		1	DK 92	M		O					
209-61120- 11	43	1	DK 92						R	1560-571-5503	ANAA
209-61120- 12	43	1	DK 92						R	1560-571-5504	ANAA
209-61121- 1	43 - 50	1	BM126	M		O					
209-61121- 2	43	1	BM126	M		O					

PART NUMBER	FIGURE AND INDEX	TOTAL QTY.	MICRO-FILM NUMBER	MAINTENANCE CODE DATA: SOURCE CODE	INST'L CAPABILITY	PRE-INST'L CAPABILITY	RECOVERABILITY	SUPPORT EQUIPMENT	FEDERAL STOCK NUMBER DATA: COGNIZANCE CODE	FEDERAL STOCK NUMBER	MFG. CODE (TSMC)
209-61121- 3		1	BM126								
209-61121- 5		1	BM126								
209-61121- 7		1	BM126	M		O					
209-61121- 8		1	BM126	M		O					
209-61121- 9		2	BM126	M		O					
209-61122- 1	43 - 41	1	DK 93	M		O					
209-61122- 3		1	DK 93	M		O					
209-61122- 5		1	DK 93	M		O					
209-61122- 11	43	1	DK 93								
209-61122- 12	43	1	DK 93								
209-61123- 3		1	DG252	M		O					
209-61123- 5	43	1	DG252	M		O					
209-61123- 7		1	DG252	M		O					
209-61123- 9		1	DG252	M		O					
209-61124	332 - 23	1									
209-61125- 1	332 - 13	1	BM130	A		F					
209-61125- 5		1	BM130	M		O					
209-61125- 7	332 - 14	1									
		1	BM130	P	F	O	C		R	1560-569-9086	ANAA
209-61125- 9	332 - 15	1									
		1	BM130	P	F	O	C		R	1560-569-9093	ANAA
209-61126	332 - 11	1	BM131	P	F	O	C		R	1560-569-9095	ANAA
209-61127	332 - 20	1									
209-61128- 1	332 - 27	1									
209-61128- 3	332	1									
		1	CA 38	P	F	O	C		R	1560-569-9098	ANAA
209-61129- 2	328	1									
209-61131- 1	332 - 7	1	BW107	P	F	O	C		R	1560-569-9106	ANAA
209-61131- 2		1	BW107								
209-61132	332 - 19	1									
209-61133- 1	332 - 26	1									
209-61133- 3	332	1									
		1	BX 28	P	F	O	C		R	1560-569-9116	ANAA
209-61133- 5	332	1									
		1	BX 28	P		O	C		R	1560-613-3173	ANAA
209-61133- 21	332	1	BX 28	M		O					
209-61134	332 - 24	1									
209-61135	332 - 12	1	BW148	P	F	O	C		R	1560-569-9129	ANAA
209-61136- 3	332 - 25	1									
209-61136- 5	332	1									
		1	BW194	P	F	O	C		R	1560-569-9144	ANAA
209-61136- 21	332	1	BW194	A		F					
209-61137- 1	332 - 8	1	BW187	A		F					
209-61137- 2		1	BW187								
209-61137- 3	332	1									
		1	BW187	P	F	O	C		R	1560-569-9145	ANAA
209-61137- 4		1	BW187								
209-61138	332 - 28	1									
209-61139- 1	332 - 21	1									
209-61139- 3	332	1									
		1	BW126	P	F	O	C		R	1560-511-2518	ANAA
209-61140- 19	33 - 62	1	CA115	P1					R	1560-338-1029	ANAA
209-61140- 20	33	1	CA115	P1					R	1560-338-1030	ANAA
209-61140- 21	33 - 63	1	CA115	X1							
209-61140- 22	33	1	CA115	X1							
209-61140- 23	33 - 64	1	CA115	M		O					
209-61140- 24	33	1	CA115	M		O					
209-61140- 25	33 - 60	1	CA115	M		O					
209-61140- 26	33	1	CA115	M		O					
209-61140- 27	33 - 59	1	CA115	M		O					
209-61140- 28	33	1	CA115	M		O					
209-61140- 29	33 - 58	1	CA115	M		O					
209-61140- 30	33	1	CA115	M		O					
209-61140- 31	33 - 57	1	CA115	M		O					
209-61140- 32	33	1	CA115	M		O					
209-61140- 33	33 - 56	1	CA115	M		O					
209-61140- 34	33	1	CA115	M		O					
209-61140- 51		1	CA115						R	1560-343-9140	ANAA
209-61140- 52		1	CA115						R	1560-343-9141	ANAA
209-61140- 61	33 - 55	1	CA115	P1	F	O	S		R	1560-522-8886	ANAA
209-61140- 62	33	1	CA115	P1	F	O	S		R	1560-522-8890	ANAA
209-61141	332 - 10	1	BY239	P	F	O	C		R	1560-511-2534	ANAA
209-61142- 1	332 - 1	1	BX 15	A		F					
209-61142- 2	332 - 2	1	BX 15	A		F					
209-61142- 3	332	1									
		1	BX 15	P	F	O	C		R	1560-570-2330	ANAA
209-61142- 4	332	1									
		1	BX 15	P	F	O	C		R	1560-570-2331	ANAA
209-61142- 5		1	BX 15	M		O					
209-61142- 6		1	BX 15	M		O					
209-61142- 7	332	1									
		1	BX 15	P	F	O	C		R	1560-570-2332	ANAA
209-61142- 8	332	1									
		1	BX 15	P	F	O	C		R	1560-570-2333	ANAA
209-61142-101	332 - 3	1	BX 15	A		F					
209-61142-102	332 - 4	1	BX 15	A		F					
209-61143- 1	332 - 5	1	BM194	A		F					
209-61143- 2	332 - 6	1	BM194	A		F					
209-61143- 3	332	1									
		1	BM194	P	F	O	C		R	1560-569-9147	ANAA
209-61143- 4	332	1									
		1	BM194	P	F	O	C		R	1560-569-9148	ANAA
209-61144	332 - 9	1	CA 39	A		F					
209-61144- 3		1	CA 39	P	F	O	C		R	1560-569-9149	ANAA
209-61145	332	1									
		1	BM136	P	F	O	C		R	1560-569-9199	ANAA
209-61145- 3		1	BM136	M		O					
209-61145- 5		1	BM136	M		O					
209-61146		1	BV301	A		F					
209-61146- 3	332	1									
		1	BV301	P	F	O	C		R	1560-569-9206	ANAA
209-61147	332 - 22	1									
209-61148	332 - 31	1									
209-61149	332	1									
209-61149- 3	332 - 30	1									
		1	BU252	P	F	O	C		R	1560-569-9212	ANAA
209-61149- 5	332 - 29	1									
		1	BU250	M		O					
209-61150	332	1	BS209	A		F					
209-61150- 3	332	1									
	332	1									
		1	BS209	P	F	O	C		R	1560-569-9213	ANAA
209-61150- 5		1	BS209	M		O					
209-61150- 21	332	1	BS209	T		O					
209-61151	332	1	CA120	P	F	O	C		R	1560-569-9244	ANAA
209-61153	33 - 65	22		M		F					
	33 - 66										
209-61154- 1	33 - 61	1		P1	F	O	S		R	1560-522-4615	ANAA
209-61154- 2	33	1		P1	F	O	S		R	1560-522-4616	ANAA
209-61154- 3		1		M		O					
209-61154- 4		1		M		O					
209-61154- 5		2		M		O					
209-61154- 7		2		M		O					
209-61154- 9		2		M		O					
209-61154- 11		2		M		O					
209-61154- 13		1		M		O					
209-61154- 14		1		M		O					
209-61154- 15		1		M		O					
209-61154- 16		1		M		O					
209-61154- 17		1		M		O					
209-61154- 18		1		M		O					
209-61154- 19		1		M		O					
209-61154- 20		1		M		O					
209-61154- 21		1		M		O					
209-61154- 22		1		M		O					
209-61154- 23		2		M		O					
209-61156		2	CA151	M		O					
209-61157	332	1	DM159	M		O					
209-61160- 3		1	BG332	M		O					
209-61160- 4		1	BG332	M		O					
209-61161- 1		1	BG329	M		O					
209-61161- 2		1	BG329	M		O					
209-61171- 11		1	BG330	M		O					
209-61171- 12		1	BG330	M		O					
209-61172		2	BG328	M		O					
209-61173- 11		1	BG327	M		O					
209-61173- 12		1	BG327	M		O					
209-61173- 13		1	BG327	M		O					
209-61173- 14		1	BG327	M		O					
209-61174- 11		1	BE 93	M		O					
209-61174- 12		1	BE 93	M		O					
209-61182- 1		1		U							
209-61182- 2		1		U							
209-61201- 1		1	CJ217	U							
209-61201- 2		1	CJ217	U							
209-61211	251	8									
209-61213	328 - 44	2	BX 91	P	F	O	C		R	1005-698-0681	B210
209-61214	328 - 46	2	BX121	P	F	O	C		R	1005-698-0682	B210
209-61215	328	2	BU246	P1	F	O	S		R	1005-694-9248	B210
209-61216	328 - 48	2	BU250	M		O					
209-61216- 3		4	BU250	M		O					
209-61216- 5		4	BU250	M		O					
209-61217	328 - 49	4	BG333	P1	F	O	C				
	328 - 50										
209-61218	328	4	BN 17	M		O					
209-61219	328 - 47	2									
209-61223	328 - 16	1	CM 8	M		F					
209-61225- 1	328 - 18	1	BM139	A		F					
209-61225- 2	328	1	BM159	A		F					
209-61226- 1	328 - 19	1	BM140	A		F					
209-61226- 2	328	1	BM140	A		F					
209-61227	328 - 49	4	BU245	P1	F	O	C		R	1005-694-9250	B210
	328 - 50										
209-61227- 3		4	BU245	X1							
209-61227- 5		4	BU245	X1							
209-61228- 1	328 - 21	1	BM141	A		F					
209-61228- 2	328	1	BM141	A		F					
209-61229- 1	328 - 20	1	CB 73	A		F					
209-61229- 2		1	CB 73	A		F					
209-61231- 3	331 - 14	4	BY240	X2					R	1005-344-0169	B210
209-61232- 1	331 - 15	4	DS 85	P	F	O	S		R	1005-344-0170	B210
209-61232- 2	331	4	DS 85	P	F	O	S		R	1005-344-0171	B210
209-61233- 3	328 - 15	2	DJ 92	X1							
209-61233- 4	328	2	DJ 92	X1							
209-61234	328 - 13	8	BG335	M		O					
209-61235	328 - 14	8	BE 94	M		O					
209-61236- 1	328	2	BE350	P1	F	O	S		R	1560-569-9274	ANAA
209-61236- 2	328	2	BE350	P1	F	O	S		R	1560-569-9314	ANAA
209-61241- 1		1	DG108						R	1560-694-0336	B210
209-61241- 3		1	DG108						R	1560-694-0337	B210
209-61241- 5		1	DG108						R	1560-694-0338	B210
209-61241- 7		1	DG108						R	1560-694-0339	B210
209-61241- 9		2	DG108								
209-61241- 11	329 - 5	2	DG108	X1							
209-61242	331 - 10	4	BM143	A		F					
209-61242- 10	331	4	BM143	A		F					
209-61243	331	8	BM144	P1	F	O	C		R	1005-341-4419	B210
209-61244	331 - 19	8	BM145	X1							
209-61245	331 - 21	8	BG336	X1							
209-61246	331 - 22	8	BE 95	M		O					
209-61247	328 - 9	8	BE161	M		O					
209-61248	328 - 10	4	BY113	M		O					
209-61258	328	4	BU235	M		O					
209-61285- 11	329	1	CC125	P1	F	O	S		R	1005-523-0329	B210
209-61285- 12	329	1	CC125	P1	F	O	S		R	1005-523-0330	B210
209-61287	329	4	CA143	M		O					
209-61288- 11	329 - 6	4	CB 30	X1					R	1005-522-7708	B210
	329 - 25										
209-61289	329 - 4	4	CA137	X2							
	329 - 24										

PART NUMBER	FIGURE AND INDEX	TOTAL QTY.	MICRO-FILM NUMBER	MAINTENANCE CODE DATA: SOURCE CODE	INSTL CAPABILITY	PRE-INSTL CAPABILITY	RECOVERABILITY	SUPPORT EQUIPMENT	FEDERAL STOCK NUMBER DATA: COGNIZANCE CODE	FEDERAL STOCK NUMBER	MFG. CODE (TSMC)
209-61290	329 - 7	8	BM336	M		F					
	329 - 26										
209-61341	329 - 23	2	CD 1	X1							
209-61341- 11		2	CD 1	X1							
209-61385- 1	329	1	CC126	P1	F	O	S		R	1005-523-0331	B210
209-61385- 2	329	1	CC126	P1	F	O	S		R	1005-523-0332	B210
209-61726- 1	41 - 13	1	AW371	M		O					
209-61726- 2	41	1	AW371	M		O					
209-61727- 1	41 - 30	1	BG337	M		O					
209-61727- 2	41	1	BG337	M		O					
209-61728	41	2	DP103	A		F					
209-61728- 3		2	DP103	M		O					
209-61728- 11	41	2	DP103	P1	F	O	S		R	1560-544-8575	ANAA
209-61728- 13	41 - 22	2	DP103	P1	F	O	S		R	1560-544-8577	ANAA
209-61728- 21	41 - 19	2	DP103	A		F					
209-61729		2	BE 96	M		O					
209-61730	41	2	DK 94	P1	O	O	C		R	1560-343-9142	ANAA
209-61730- 3		2	DK 94	X1							
209-61730- 5		2	DK 94	X1							
209-61730- 11	41	2	DK 94	P1	O	O	C		P	1560-544-8588	ANAA
209-61731	43 - 65	1	CB129	P1	F	O	C				
209-61731- 3	43 - 65	2	CB129	P1	F	O	C		R	1560-348-8455	ANAA
209-61732- 1	43 - 74	1	AW369	M		O					
209-61732- 2	43	1	AW369	M		O					
209-61732- 3		1	AW369	M		O					
209-61732- 4		1	AW369	M		O					
209-61733- 1	43 -100	1	BM146	M		O					
	331 - 9										
209-61733- 2	43	1	BM146	M		O					
	331										
209-61733- 3		1	BM146	M		O					
209-61733- 4		1	BM146	M		O					
209-61733- 5		1	BM146	M		O					
209-61733- 6		1	BM146	M		O					
209-61733- 7		1	BM146	M		O					
209-61733- 8		1	BM146	M		O					
209-61734- 1	41 - 28	1	AW373	M		O					
209-61734- 2	41	1	AW373	M		O					
209-61734- 3		1	AW373	M		O					
209-61734- 4		1	AW373	M		O					
209-61735	41 - 18	2	AW370	M		O					
209-61736	41 - 16	2	BG340	M		O					
209-61737	41 - 17	2	BJ 17	M		O					
209-61738	41	2	BG339	M		O					
209-61739	41 - 26	2	BE 98	M		O					
209-61740	41 - 12	2	BE 99	M		O					
209-61740- 3		2	BE 99	M		O					
209-62227- 39	348 - 16	8									
209-63001		1	DG 53	U							
209-63004	333 - 8	2	DR225						R	1680-610-0485	B210
	333 - 40										
	334 -222										
	335 - 90	1									
	338 - 85										
	339 -113										
	340 - 5										
	340 - 37										
209-63005	333 - 42	2	BG341	M		O					
	333 - 45										
209-63006	333 - 47	1	DL256								
	334 -219										
	335 - 89	1									
	338 - 84										
	339 -112										
209-63006- 3		1	BG344	M		O					
209-63007	338 - 16	2	DL117	P	F	O	C		R	1680-610-1002	B210
	339 - 12										
209-63008	333 - 90	1	BG346	M		O					
209-63009	333 - 84	1	BG349	M		O					
209-63011	119 - 53	1	BY 46								
209-63011- 1	228 - 34	1									
	336 - 20										
	338 - 1										
209-63011- 2	228 - 35	1									
	336										
	338										
209-63011- 11	338 - 90	2	BY 46	M		O					
209-63011- 21	228	1	BY 46								
	338										
209-63011- 22	228	1	BY 46								
	336										
209-63011- 31	228	1		X2							
	336										
	338 - 1										
209-63011- 32	228	1		X2							
	336										
	338										
209-63012- 1	228 - 31	2	BU 83	A		F					
	336 - 19	1									
	337 - 1	1									
209-63012- 2	228 - 32	1	BU 83	A		F					
	336	1									
	337	1									
209-63012- 11	337 - 53	1									
209-63013	264 - 84	1									
	333 - 1										
209-63017	333 - 83	1	BE100	M		O					
209-63018	333 - 76	1	BG348	M		O					
209-63019	335A- 16	1	BE101	M		O					
209-63020	335A- 5	1	BW189								
209-63021- 1		1	DG253								
209-63021- 2		1	DG253	M		O					
209-63021- 3		1	DG253	X2							
209-63021- 4		1	DG253								
209-63021- 7		1	DG253	M		O					
209-63021- 8		1	DG253	M		O					
209-63021- 9		1	DG253	M		O					
209-63021- 11	338 - 18	1	DG253	M		O					
	339 - 20										
209-63021- 12	338	1	DG253	M		O					
	339										
209-63022	338	1	DL148	P1	F	O	C				
209-63022- 3	338	2	DL148	X1							
209-63022- 11	338 - 96	2	DL148	P1	F	O	C		R	1090-510-0782	B210
	339 -122										
209-63023- 1		1	DL148								
209-63023- 2		1	DL148								
209-63023- 3		1	DL148								
209-63023- 4		1	DL148								
209-63023- 5		1	DL148								
209-63023- 6		1	DL148								
209-63023- 7		2	DL148								
209-63024- 3		1	BX167	X1							
209-63024- 4		1	BX167	X1							
209-63024- 11	338 - 83	1	BX167	X1							
209-63024- 12	338	1	BX167	X1							
209-63024- 21	339 -111	1	BX167	X1							
209-63024- 22	339	1	BX167	X1							
209-63030		1									
209-63031		1	DR180								
209-63031- 1	337 - 14	1									
209-63031- 2	337	1									
209-63031- 3		1	DR180	X1							
209-63031- 4		1	DR180	X1							
209-63031- 5		2	DR180	M		O					
209-63031- 11		2	DR180	M		O					
209-63031- 12		2	DR180	M		O					
209-63031- 13		2	DR180	M		F					
209-63031- 15	337 - 15	1									
209-63032- 1		1	BU 79								
209-63032- 2		1	BU 79								
209-63032- 3		1	BU 79	X1							
209-63032- 4		1	BU 79	X1							
209-63032- 11	337 - 42	1									
209-63032- 12	337	1									
209-63033- 1	337 - 19	1									
209-63033- 2	337	1									
209-63033- 5		2	BW116	X1							
209-63033- 7		2	BW116	M		O					
209-63033- 8		2	BW116	M		O					
209-63033- 11		1	BW116	M		O					
209-63033- 12		1	BW116	M		O					
209-63033- 13		1	BW116	M		O					
209-63033- 14		1	BW116	M		O					
209-63033- 15		1	BW116	M		O					
209-63033- 16		1	BW116	M		O					
209-63033- 17		1	BW116	X1							
209-63033- 18		1	BW116	X1							
209-63033- 19		1	BW116	M		O					
209-63033- 20		1	BW116	M		O					
209-63034	335A- 10	1	BM148								
209-63034- 3		1	BM148	X2							
209-63035	335A- 27	1	BG349	M		O					
209-63036	333 - 91	2	BE102	M		O					
209-63037	335A- 29	2	BE103	M		O					
209-63038	335A- 30	1	BE104	M		O					
209-63039	335A- 2	1	BE105	M		O					
209-63040	333	4	BG350	X1							
209-63041	333 - 14	1	DK185	P1	F	O	S		R	1095-347-7890	B210
209-63041- 3		1	BW 49	M		O					
209-63041- 5		1	BW 49	M		O					
209-63041- 7		1	BW 49	M		O					
209-63041- 9		2	BW 49	M		O					
209-63041- 11		2	BW 49	M		O					
209-63041- 13		1	BW 49	M		F					
209-63041- 15	333 - 15	1	BW 49	M		F					
209-63041- 17		1	BW 49	M		F					
209-63041- 19		1	BW 49	M		F					
209-63042	333 - 16	1	BS 52	P1	F	O	S		R	1095-347-7891	B210
209-63042- 3		1	BS 52	M		O					
209-63042- 5	333	1	BS 52	M		F					
209-63042- 7		1	BS 52	M		O					
209-63042- 9		1	BS 52	M		O					
209-63042- 11		1	BS 52	M		O					
209-63042- 13		1	BS 52	M		O					
209-63042- 15	333	1	BS 52	M		F					
209-63042- 17		1	BS 52	M		O					
209-63042- 19		2	BS 52	M		O					
209-63042- 21		2	BS 52	M		O					
209-63042- 23		2	BS 52	M		O					
209-63042- 31		1	BS 52	M		O					
209-63043	333 - 20	1	DR336	P1	F	O	S		R	1095-347-7892	B210
209-63043- 3		1	DR336	X1							
209-63043- 5		1	DR336	X1							
209-63043- 7		1	DR336	X1							
209-63043- 9		1	DR336	X1							
209-63043- 11		1	DR336	M		O					
209-63043- 13		1	DR336	M		O					
209-63043- 15		1	DR336	M		O					
209-63043- 17		2	DR336	M		O					
209-63043- 19		1	DR336	M		O					
209-63043- 21		1	DR336	M		O					
209-63043- 23		1	DR336	M		O					
209-63043- 25		1	DR336	M		O					
209-63043- 27		1	DR336	M		O					
209-63043- 29		1	DR336	M		O					
209-63043- 31		1	DR336	M		O					
209-63043- 41	333 - 21	1	DR336	M		O					
209-63043- 43		1	DR336	M		O					
209-63043- 45		1	DR336	M		O					

PART NUMBER	FIGURE AND INDEX	TOTAL QTY.	MICRO-FILM NUMBER	MAINTENANCE CODE DATA: SOURCE CODE	INSTL CAPABILITY	PRE-INSTL CAPABILITY	RECOVERABILITY	SUPPORT EQUIPMENT	FEDERAL STOCK NUMBER DATA: COGNIZANCE CODE	FEDERAL STOCK NUMBER	MFG. CODE (TSMC)
209-63043- 47		1	DR336	M		O					
209-63043- 49	333	1	DR336	M		O					
209-63043- 51		1	DR336	M		O					
209-63043- 53		2	DR336	M		F					
209-63043- 55		1	DR336	M		O					
209-63043- 65		1	DR336	M		O					
209-63043- 67		1	DR336	M		O					
209-63043- 69	333 - 22	2	DR336	M		F					
209-63043- 71		1	DR336	M		O					
209-63044- 3		1	BU 78	X1							
209-63044- 11	333 - 44	1	BU 78	X2							
209-63045- 3		1	DG307	X1							
209-63045- 11	333 - 41	1	DG307	X2							
209-63048	333	1	DR335	A		O					
209-63048- 3		1	DR335	M		O					
209-63048- 4		1	DR335	M		O					
209-63048- 5		1	DR335	M		O					
209-63048- 7		1	DR335	M		O					
209-63048- 9		1	DR335	M		O					
209-63048- 11		2	DR335	M		O					
209-63048- 13		1	DR335	M		O					
209-63048- 15		1	DR335	M		O					
209-63048- 17		2	DR335	M		O					
209-63048- 19		2	DR335	M		O					
209-63048- 21		8	DR335	M		O					
209-63049	333 - 51	1	DN112	X2							
209-63049- 3		1	DN112	X1							
209-63049- 5		1	BW130	M		F					
209-63049- 9	333 - 52	1	DN112	M		O					
209-63049- 11	333 - 53	1	DN112	M		O					
209-63049- 13		1	DN112	M		O					
209-63049- 15		1	DN112	M		O					
209-63050- 3	333 - 36	1	AY141	P1	F	O	S		R	1095-347-7897	B210
209-63050- 5	333 - 37	1	AY141	P1	F	O	S		R	1095-347-7902	B210
209-63052	333 - 98	2	BG352	P1	F	O	C		R	1095-347-7903	B210
209-63053	333 - 97	2	BE106	M		O			R	1095-347-7908	B210
209-63057	333 - 39	1	DJ150								
209-63057- 3		1	DJ150	X1							
209-63057- 11		1	DJ150	X2							
	333 - 39	1									
209-63059	333 -104	1	BM149	P1	F	O	S		R	1095-347-7917	B210
209-63059- 3		1	BM149	X1							
209-63060	333 -105	1	BM150	P1	F	O	S		R	1095-347-7919	B210
209-63060- 3		1	BM150	X1							
209-63061	333 - 75	1		A		O					
	335A										
209-63062	119 - 38	3	DN 62	A		O					
	333 -107										
209-63063- 3		2	DS 86	M		O					
209-63063- 5		2	DS 86	M		O					
209-63063- 7		2	DS 86	M		O					
209-63063- 9		2	DS 86	M		O					
209-63063- 13		2	DS 86	M		O					
209-63063- 15		2	DS 86	M		O					
209-63063- 17		2	DS 86	M		O					
209-63063- 19		2	DS 86	M		O					
209-63063- 31	342 - 34	1									
209-63063- 41	342 - 36	2									
	342 - 38	1									
209-63063- 51	342 - 1	3									
	342 - 17	3									
	342 - 19										
209-63063- 61	342 - 15	1									
209-63064	333 -103	1	BV303								
209-63064- 3	333	1	BV303	X1							
209-63064- 11	333 -106	1	BV303	P1	F	O	S		R	1095-347-7922	B210
209-63067	335A- 19	1	BE108	M		O					
209-63069	333 - 54	1		X2							
	335A- 1										
209-63073	338 - 48	2	DJ 52	M		O					
	339 - 81										
209-63082	338 - 71	2	DJ 53	M		O					
	339 -108										
209-63090	338 - 70	2	DG165	M		O					
	339 -110										
209-63091	339 - 99	2	BE110	M		O					
209-63092	337 - 47	1									
	349 - 26	1									
209-63093	333 -109	5	DG 33	M		O					
	337 - 46	2									
	349 - 8										
	349 - 27	2									
209-63094- 1	337 - 34	1									
209-63094- 2	337	1									
209-63094- 3		2	CD 44	M		O					
209-63094- 4		2	CD 44	M		O					
209-63096		1	BM152	M		O					
209-63097	337 - 45	2									
209-63098	337 - 44	2									
	340 - 35	2									
209-63099	337 - 44	1									
209-63099- 3		2	BM153	M		O					
209-63100- 1	337 - 29	1									
209-63100- 2	337	1									
209-63100- 3		1	BG356	M		O					
209-63100- 4		1	BG356	M		O					
209-63101	333 - 48	1	DR337	X2							
209-63101- 3		1	DR337	X1							
209-63101- 5		1	DR337	M		F					
209-63101- 7		1	DR337	M		F					
209-63101- 9	333 - 50	1	DR337	M		O					
209-63101- 11	333 - 49	1	DR337	M		O					
209-63101- 13		1	DR337	M		O					
209-63101- 15		1	DR337	M		O					
209-63102- 3	337 - 38	1									

PART NUMBER	FIGURE AND INDEX	TOTAL QTY.	MICRO-FILM NUMBER	MAINTENANCE CODE DATA: SOURCE CODE	INSTL CAPABILITY	PRE-INSTL CAPABILITY	RECOVERABILITY	SUPPORT EQUIPMENT	FEDERAL STOCK NUMBER DATA: COGNIZANCE CODE	FEDERAL STOCK NUMBER	MFG. CODE (TSMC)
209-63102- 5	337 - 39	1									
209-63103	337 - 50	1									
209-63105- 1		1		M		O					
209-63105- 2		1		M		O					
209-63111	333 - 55	1	BW 61	M		O					
209-63113	338 - 20	2	DG294	M		O					
	339 - 30										
209-63113- 1		1	DG254								
209-63113- 2		1	DG254								
209-63113- 3		1	DG254								
209-63113- 4		1	DG254								
209-63113- 6		1	DG254								
209-63113- 7	339 - 32	2	BM155	M		F					
209-63115		1	DR 54								
209-63115- 3		2	DR 54	M		F					
209-63115- 5		2	DR 54	M		F					
209-63118	333 - 56	1	BW193	M		O					
209-63119- 1	333 - 57	1	BM156	M		O					
209-63119- 2	333	1	BM156	M		O					
209-63124- 1	338 - 22	1	BP 30	P1	F	O	S		R	1560-308-6849	ANAA
209-63124- 2	338	1	BP 30	P1	F	O	S		R	1560-308-6850	ANAA
209-63124- 3		1	BP 30								
209-63124- 4		1	BP 30								
209-63124- 5		1	BP 30								
209-63124- 6		1	BP 30	M		O					
209-63124- 7		2	BP 30	M		F					
209-63124- 9		2	BP 30	M		F					
209-63124- 17		1	BP 30	M		O					
209-63124- 19		1	BP 30	M		O					
209-63124- 23		1	BP 30	M		O					
209-63124- 24		1	BP 30	M		O					
209-63124- 25		1	BP 30	M		O					
209-63124- 26		1	BP 30	M		O					
209-63124- 27	338 - 23	1	BP 30	M		O					
209-63130	338 - 36	2	DG166	P1	F	O	S		R	1640-315-5799	ANAA
	339 - 28										
209-63130- 3		2	DG166	X1							
209-63130- 5		2	DG166	M		O					
209-63132		2	BG358	M		O					
209-63133	333 - 95	1	BM157	P	F	O	S		R	1095-347-7929	B210
209-63133- 3		1	BM157	M		O					
209-63133- 5		1	BM157	M		O					
209-63133- 7		1	BM157	M		O					
209-63133- 9		1	BM157	M		O					
209-63133- 11	333	1	BM157	M		O					
209-63134	333 - 30	1	BM158	M		O					
209-63135	333 - 31	1	BM159	M		F					
209-63136	333 - 29	1	BM160	M		F					
209-63136- 3		1	BM160	M		F					
209-63137	333 - 34	1	BM161	M		F					
209-63137- 3		1	BM161	M		F					
209-63137- 5		1	BM161	M		F					
209-63138- 3		1	BM162	M		O					
209-63138- 5		1	BM162	M		O					
209-63138- 7		1	BM162	M		O					
209-63139- 3		1	BM162	M		O					
209-63139- 5		1	BM162	M		O					
209-63139- 7		1	BM162	M		O					
209-63141	333 - 26	1	BW143	P	F	O	S		R	1095-347-7931	B210
209-63141- 3		1	BW143	M		O					
209-63141- 5		1	BW143	M		F					
209-63141- 7	333 - 27	1	BW143	M		O					
209-63141- 9		1	BW143	M		O					
209-63142	333 - 32	1	DJ 89	P	F	O	S		R	1095-347-7934	B210
209-63142- 3		1	DJ 89	M		O					
209-63142- 5		1	DJ 89	M		F					
209-63142- 7	333 - 33	1	DJ 89	M		F					
209-63142- 9		1	DJ 89	M		O					
209-63143	333 -102	2	BG357	M		O					
209-63144	333 -112	1	BU 82	P1	F	O	S		R	1095-347-7935	B210
209-63144- 3		1	BU 82	X1							
209-63144- 5		1	BU 82								
209-63144- 7		1	BU 82	M		O					
209-63144- 11		1	BU 82	X1							
209-63144- 13		1	BU 82	M		O					
209-63144- 15	333 -114	1	BU 82	M		O					
209-63144- 17		1	BU 82	M		O					
209-63145- 13		1	AW 45								
209-63145- 15		1	AW 45								
209-63146- 3		1		U							
209-63146- 7		1		U							
209-63147	333 - 12	1	BM164	P	F	O	S		R	1095-347-7939	B210
209-63147- 3	333	1	BM164	M		O					
209-63148	333 - 19	1	BG 35								
209-63148- 1		1	BG 35	P	F	O	S		R	1095-347-7958	B210
209-63148- 3		1	BG 35	M		O					
209-63148- 9	333	1	BG 35	M		F					
209-63148- 11		1	BG 35	M		O					
209-63148- 13		1	BG 35	M		O					
209-63148- 15	333	1	BG 35	M		O					
209-63148- 17		1	BG 35	M		O					
209-63148- 19		1	BG 35	M		O					
209-63149- 3		1	DN118	X1							
209-63149- 7	335 - 68	1									
209-63149- 9	335	1									
209-63149- 11	333 - 25	1	DN118	X2							
209-63150	333 - 62	1	BM165	M		O					
209-63150- 3		1	BM165	M		O					
209-63150- 5		2	BM165	M		O					
209-63151	338 - 65	1	DG 34	P1	F	O	C		R	1560-569-9319	ANAA
	339 - 94										
209-63152		2	DJ 2								
209-63153		2									
209-63153- 1		1									
209-63153- 2		1									

PART NUMBER	FIGURE AND INDEX	TOTAL QTY.	MICRO-FILM NUMBER	MAINTENANCE CODE DATA: SOURCE CODE	INSTL CAPABILITY	PRE-INSTL CAPABILITY	RECOVERABILITY	SUPPORT EQUIPMENT	FEDERAL STOCK NUMBER DATA: COGNIZANCE CODE	FEDERAL STOCK NUMBER	MFG. CODE (TSMC)
209-63154	342 - 51	1									
209-63154- 3		1	DG 71	X1							
209-63154- 5		1	DG 71	X1							
209-63154- 7	342	1									
209-63154- 9	342 - 52	1									
209-63154- 11		1	DG 71	M		O					
209-63154- 13		1	DG 71	M		O					
209-63154- 15		1	DG 71	M		O					
209-63154- 17	342 - 53	1									
209-63154- 19		1	DG 71	M		O					
209-63154- 21		1	DG 71	M		O					
209-63154- 23		1	DG 71	M		O					
209-63156- 1	338 - 25	1	BW 63	M		O					
209-63156- 2	338	1	BW 63	M		O					
209-63157	333 - 17	1	BN131	P	F	O	S		R	1095-347-7959	B210
209-63157- 3		1	BN131	M		O					
209-63157- 5		1	BN131	M		O					
209-63157- 7		1	BN131	M		O					
209-63158	333 - 18	1	BN130	P	F	O	S		R	1095-347-7965	B210
209-63158- 3		1	BN130	M		O					
209-63158- 7		1	BN130	M		O					
209-63158- 9		1	BN130	M		O					
209-63159	338 - 72	1	DG197	M		O					
	339 - 89										
209-63159- 3		2	DG197								
209-63159- 5		2	DG197								
209-63160	338 - 46	2	DG198	M		O					
	339 - 82										
209-63161	338 - 66	2	DG199	M		O					
	339 -101										
209-63162		1	DG255								
209-63162- 3	338 - 50	2	DG255	P1	F	O	C		R	1560-341-4677	ANAA
	339 - 87										
209-63163	338 - 52	2	CV 68	M		O					
	339 - 88										
209-63164		1	DG256								
209-63164- 3	338 - 51	2	DG256	P1	F	O	C		R	1560-341-4678	ANAA
	339 - 85										
209-63165	338 - 64	1	DG200	P1	F	O	C		R	1560-341-4679	ANAA
	338 - 67										
	339 - 93										
	339 -102										
209-63166	338 - 68	1	DG 35	P1	F	O	C		R	1560-341-4680	ANAA
	339 -103										
209-63167	339 - 95	4	BE115	M		O					
209-63169- 1	338 - 35	1	DG257	M		O					
209-63169- 2	338	1	DG257	M		O					
209-63169- 3	338 - 33	1	DG257	M		O					
209-63169- 4	338	1	DG257	M		O					
209-63170	338 - 69	2	DG167	M		O					
	339 -109										
209-63171	333 - 70	1	BE365	M		O					
209-63172	333 - 69	1	BE368	M		O					
209-63173	219 - 56	1	BE117	M		O					
	333 - 71										
209-63174	333 - 60	1	BN170	A		F					
209-63181	338 - 63	2	DG201								
	339 - 90										
209-63183- 3		2	BN132	M		O					
209-63183- 5		2	BN132	M		O					
209-63183- 7		2	BN132	M		O					
209-63183- 9		2	BN132	M		O					
209-63184- 3		1	BN132	X1							
209-63184- 11	333 - 96	1	BN132	P1	F	O	S		R	1095-347-7976	B210
209-63185	333 -103	1	BE118	P	F	O	C		R	1095-347-7980	B210
209-63186- 13	338 - 82	2	BW 46	M		F					
209-63186- 15	338 - 81	2	BW 46	M		F					
	339 - 17										
209-63186- 17	338 - 80	2	BW 46	M		F					
	339 - 16										
209-63186- 19	338 - 79	2	BW 46	M		F					
	339 - 15										
209-63187	338 - 74	2	DG168	M		O					
	339 - 78										
209-63188	333 -115	1									
209-63189	333 - 88	1		M		O					
209-63202		1	DO243								
209-63202- 11	336	1									
	340	1									
209-63202- 21	285	1									
	334										
209-63202- 31	287	1									
	287A										
	335	1									
	339										
209-63202- 32	339	1									
209-63202- 41	349	1									
209-63202- 51	336	1									
	339	1									
209-63202- 61	336	1									
	337	1									
209-63202- 71	269	1									
	344								R	1440-611-1692	B210
	345										
	346										
	347										
	348										
209-63202- 81	336	1									
209-63202- 91	286A	1									
209-63202-111	336	1									
	340	1									
209-63202-121	285	1									
	285A										
	334										
209-63202-131	287	1									

PART NUMBER	FIGURE AND INDEX	TOTAL QTY.	MICRO-FILM NUMBER	MAINTENANCE CODE DATA: SOURCE CODE	INSTL CAPABILITY	PRE-INSTL CAPABILITY	RECOVERABILITY	SUPPORT EQUIPMENT	FEDERAL STOCK NUMBER DATA: COGNIZANCE CODE	FEDERAL STOCK NUMBER	MFG. CODE (TSMC)
	287A										
	335										
209-63202-151	336	1									
	339	1									
209-63202-171	269	1									
	345A										
	347										
209-63202-221	285	1									
	285A										
	334										
209-63202-371	343	1									
209-63205		1	DP250								
209-63209	333 - 87	1	BG370	M		O					
209-63210- 1	336 - 21	1									
	340	1									
	346 - 5										
	347 - 47										
	347 - 51										
209-63210- 2	336	1									
	340	1									
209-63210- 11		1									
209-63210- 21		1									
209-63210-102	336	1									
	340	1									
	347 - 40										
	348 - 57										
209-63211- 1		1	DS 45								
209-63211- 2		1	DS 45								
209-63211- 3	340 - 42	1									
209-63211- 4	340	1									
209-63211- 5		1	DS 45	X1							
209-63211- 11	340	1									
209-63211- 12	340	1									
209-63211- 21	340	1									
209-63212	349	1									
	349	1									
209-63212- 1	349	1	DN 8						R	1680-609-4391	B210
209-63212- 2	349	1	DN 8								
209-63212- 3	349	1	DN 8								
	349	1									
209-63212- 4	349	1	DN 8								
	349	1									
209-63212- 5	349	1	DN 8								
	349	1									
209-63212- 6	349	1	DN 8								
	349	1									
209-63212- 7	349 - 30	1									
209-63212- 8	349	1	DN 8								
	349	1									
209-63212- 9	349 - 31	1									
209-63212- 10	349	1	DN 8								
	349	1									
209-63212- 11	349	1	DN 8								
	349	1									
209-63212- 12	349	1	DN 8								
	349	1									
209-63212- 25	349 - 76	1									
209-63212- 26		1	DN 8								
209-63214		3	DG 36								
209-63215	340 - 96	2									
209-63216- 1	340	1									
209-63216- 2	340	1									
209-63216- 3	340 - 16	1									
209-63216- 4	340	1									
209-63216- 5	340 - 20	1									
209-63216- 6	340	1									
209-63216- 25	340 - 22	1									
209-63216- 27		1	DS 41								
209-63216- 33	340 - 30	1									
209-63216- 35		1	DS 41								
209-63216- 39	340 - 33	1									
209-63216- 43	340 - 19	1									
209-63216- 45	340	1									
209-63216- 47	340 - 18	1									
209-63216- 49	340	1									
209-63216- 51	340 - 17	1									
209-63216- 70	340 - 32	1									
209-63216- 81	340 - 21	1									
209-63216-102	340	1									
209-63217- 1	342	1									
209-63217- 2	342	1									
209-63217- 5		1		M		O					
209-63217- 6		1		M		O					
209-63217- 7	342 - 9	1									
209-63217- 9		1		M		O					
209-63217- 11	342 - 8	1									
209-63217- 12	342	1									
209-63217- 22	342	1									
209-63218- 1	349 - 20	1									
209-63218- 2	349	1									
	349	1									
209-63218- 17	349 - 22	1									
209-63218- 34		1									
209-63219- 1	349 - 32	1									
209-63219- 2	349	1	DH188								
	349	1									
209-63219- 11	349 - 37	1									
209-63219- 12	349	1	DH188								
	349	1									
209-63219- 29	349	1	DH188								
	349	1									
209-63219- 31	349 - 34	1									
209-63219- 33	349 - 41	1									
209-63219- 37	349 - 42	1									
209-63219- 61	349	1	DH188								

PART NUMBER	FIGURE AND INDEX	TOTAL QTY.	MICRO-FILM NUMBER	MAINTENANCE CODE DATA: SOURCE CODE	INSTL CAPABILITY	PRE-INSTL CAPABILITY	RECOVERABILITY	SUPPORT EQUIPMENT	COGNIZANCE CODE	FEDERAL STOCK NUMBER DATA: FEDERAL STOCK NUMBER	MFG. CODE (TSMC)
	349	1									
209-63219- 69	349 - 39	1									
209-63219- 70	349	1	DH188								
	349	1									
209-63219- 71	349	1	DH188								
	349	1									
209-63219- 72	349	1	DH188								
	349	1									
209-63219- 81	349	1	DH188								
	349	1									
209-63219- 82	349	1									
		1	DH188								
209-63219-111	349	1	DH188								
	349	1									
209-63219-112	349	1	DH188								
	349	1									
209-63219-121	349	1	DH188								
	349	1									
209-63219-122	349	1	DH188								
	349	1									
209-63219-131	349	1	DH188								
	349	1									
209-63219-132	349	1	DH188								
	349	1									
209-63220- 1	342	1									
209-63220- 2	342	1									
209-63220- 5		1		M		0					
209-63220- 6		1		M		0					
209-63220- 7		1		M		0					
209-63220- 8		1		M		0					
209-63220- 9		1		M		0					
209-63220- 10		1		M		0					
209-63220- 11		1		M		0					
209-63220- 12		1		M		0					
209-63220- 13		1		M		0					
209-63220- 14		1		M		0					
209-63220- 15	342 - 45	1									
209-63220- 31	342 - 44	1									
209-63220- 32	342	1									
209-63221- 1	349	1	DH192								
209-63221- 2	349	1	DH192								
209-63221- 11	349	1	DH192								
209-63221- 12	349	1	DH192								
209-63221- 31	349 - 19	1									
209-63221- 41	349 - 10	1	DH192								
209-63221- 42	349	1	DH192								
209-63221- 51	349 - 11	1	DH192								
209-63221- 52	349	1	DH192								
209-63222		1	DH245								
209-63224- 3	349	1									
	349	1									
209-63224- 4	349	1									
	349	1									
209-63224- 5	349 - 25	1									
209-63224- 6	349	1									
	349	1									
209-63224- 11	349	1									
	349	1									
209-63224- 12	349	1									
	349	1									
209-63224- 21	349	1		X2							
	349	1									
209-63224- 22	349	1		X2							
	349	1									
209-63225- 1	349 - 29	1									
209-63225- 2	349	1									
209-63226		1									
209-63226- 2		1	DR 31								
209-63226- 3	349 - 43	1									
209-63226- 4	349	1	DR 31								
	349	1									
209-63227	334 -229	1									
	335 - 95	1									
	349 - 83	1									
209-63230	342 - 12	1									
	342 - 46	1									
		1									
209-63231	342 - 30	1									
	349 - 36	1									
209-63232	335 - 94	4									
	349 - 82	4									
209-63233		1									
209-63233- 1	342 - 50	1									
209-63233- 2	342	1									
209-63233- 3		1	DG202	M		0					
209-63233- 5		1	DG202	M		0					
209-63234- 3	334 - 78	3									
	334 -101	2									
	349										
	349	1									
209-63234- 5	349	1	DG 38								
	349	1									
209-63234- 7	334 - 29	6									
	334 -129										
	334 -133										
	334 -137										
209-63235- 1	337 - 21	1									
209-63235- 2	337	1									
209-63235- 7	337 - 26	1									
209-63235- 39	337 - 23	1									
209-63235- 45	337 - 24	1									
209-63236- 1	342 - 11	1									
209-63236- 2	342	1									
209-63236- 3		1	DQ198	M		0					
209-63236- 5		1	DQ198	M		0					

PART NUMBER	FIGURE AND INDEX	TOTAL QTY.	MICRO-FILM NUMBER	MAINTENANCE CODE DATA: SOURCE CODE	INSTL CAPABILITY	PRE-INSTL CAPABILITY	RECOVERABILITY	SUPPORT EQUIPMENT	COGNIZANCE CODE	FEDERAL STOCK NUMBER DATA: FEDERAL STOCK NUMBER	MFG. CODE (TSMC)
209-63236- 7		1	DQ198	M		0					
209-63236- 9		1	DQ198	M		0					
209-63236- 11		1	DQ198	M		0					
209-63237		2		M		0					
209-63238		1	DG 39								
209-63239	342 - 47	1									
209-63239- 1	334	1									
209-63239- 2	334	1									
209-63239- 21	334	1									
209-63239- 22	334	1									
209-632391		1									
209-63240		1	DJ111								
209-63240- 1	334	1									
209-63240- 2	334	1									
209-63240- 3	334 -226	1									
209-63240- 4	334	1									
209-63241- 1	334 - 22	1									
209-63241- 2	334	1									
209-63241- 7	334 - 41	1									
209-63241- 8	334	1									
209-63241- 11	334	1									
209-63241- 21	334	1									
209-63241- 22	334	1									
209-63241- 29	334 - 27	1									
209-63241- 31	334 - 23	1									
209-63241- 32	334	1									
209-63241- 35	334 - 28	1									
209-63241- 43	334	1									
209-63241- 45	334	1									
209-63243- 3	334	1									
209-63246- 1	334 -107	1									
209-63246- 2	334	1									
209-63246- 3	334 -110	1									
209-63246- 4	334	1									
209-63246- 5	334	1									
209-63246- 6	334	1									
209-63246- 11	334	1									
209-63246- 12	334	1									
209-63246- 17	334 -135	1									
209-63246- 18	334	1									
209-63246- 21	334	1									
209-63246- 22	334	1									
209-63246- 25	334	1									
209-63246- 27	334	1									
209-63246- 31	334	1									
209-63246- 41	334	1									
209-63246- 42	334	1									
209-63246- 43	334 -130	1									
209-63246- 44	334	1									
209-63246- 45	334 -131	1									
209-63246- 46	334	1									
209-63246- 55	334	1									
209-63246- 57	334 -139	1									
209-63246- 61	334 -118	1									
209-63246- 65	334	1									
209-63246- 69	334	1									
209-63246- 73	334 -123	1									
209-63246- 74		1	OK 55								
209-63246- 79	334 -128	1									
209-63246- 89	334 -120	2									
209-63246-123	334	1									
209-63246-131	334	1									
209-63246-132	334	1									
209-63246-143	334 -125	1									
209-63247- 1	334	1									
209-63247- 2	334	1									
209-63247- 3	334 - 62	1									
209-63247- 4	334 - 63	1									
209-63249- 1	342	1									
209-63249- 2	342	1									
209-63249- 5		1		M		0					
209-63249- 6		1		M		0					
209-63249- 7		1		M		0					
209-63249- 8		1		M		0					
209-63249- 9		1		M		0					
209-63249- 10		1		M		0					
209-63249- 11		1		M		0					
209-63249- 12		1		M		0					
209-63249- 13	342 - 26	1									
209-63249- 15		2		M		F					
209-63249- 17		1		M		0					
209-63249- 19		1		M		0					
209-63249- 21		1		M		0					
209-63249- 22		1		M		0					
209-63249- 31	342 - 25	1									
209-63249- 32	342	1									
209-63250	340	2									
209-63252		1									
209-63252- 1		1									
209-63252- 2		1									
209-63252- 3		1	DM 76								
209-63252- 4		1	DM 76								
209-63252- 11	334	1									
209-63252- 12	334	1									
209-63252- 21		1									
209-63253- 3	334 -221	1									
209-63253- 4	334	1									
209-63253- 11	334	1									
209-63253- 12	334	1									
209-63254- 11	334 - 16	1									
209-63254- 21	334	1									
209-63255- 1	334	1									
209-63255- 2		1	DL180								
209-63255- 11	334	1									
209-63255- 15	334	1									

PART NUMBER	FIGURE AND INDEX	TOTAL QTY.	MICRO-FILM NUMBER	MAINTENANCE CODE DATA: SOURCE CODE	INSTL CAPABILITY	PRE-INSTL CAPABILITY	RECOVERABILITY	SUPPORT EQUIPMENT	FEDERAL STOCK NUMBER DATA: COGNIZANCE CODE	FEDERAL STOCK NUMBER	MFG. CODE (TSMC)
209-63255- 17	334	1									
209-63255- 19	334 - 79	1									
209-63255- 21	334	1									
209-63255- 41	334 - 66	1									
209-63255- 51	334 - 67	1									
209-63256- 1	285 - 96	1	DJ146								
	334										
209-63256- 7		1	DJ146								
209-63256- 13	334 -104	1									
209-63256- 15	334 - 98	1									
209-63256- 17	334	1									
209-63256- 19	334	1									
209-63256- 21	334	1									
209-63256- 27	334	1									
209-63256- 29	334 -102	1									
209-63256- 31	334	1									
209-63256- 41	334	1									
209-63256- 53	334	1									
209-63256- 55	334 - 96	1									
209-63256- 71	334	1									
209-63256- 85	334 - 99	2									
209-63256-101	285 - 96	1	DJ146								
	334 - 84										
209-63256-201	285	1									
	334										
209-63257- 1	342 - 39	1									
209-63257- 2	342	1									
		1	DG259	M		0					
209-63257- 3		1	DG259	M		0					
209-63257- 5		1	DG259	M		0					
209-63258	334 -116	1									
209-63258- 3	334	1									
209-63259	334 - 87	4									
209-63259- 11	334	3									
209-63260	334 - 90	1									
209-63261		1	DM246								
209-63261- 3	334 - 89	1									
209-63261- 5	334	1									
209-63262		1	DG219								
209-63262- 3		1									
209-63262- 5		1									
209-63263		1	DG261								
209-63263- 5	338 - 52	2	DG261	M		0					
	339 - 88										
209-63264	334 -147	2									
209-63265	334 - 93	1									
209-63266	334 - 94	1									
209-63267	338 - 62	4	DG204	M		0					
	339 - 95										
209-63268- 1	334	1									
209-63268- 3	334 -157	1									
209-63268- 5	334 -158	1									
209-63268- 11	334	1									
209-63269	334 -124	1									
209-63270	334 -123	1									
209-63271	334 - 68	4									
	334 -169										
209-63271- 3	334 - 69	1									
	334 -170										
209-63271- 5	334 - 70	1									
	334 -171										
209-63271- 7	334 - 71	1									
	334 -172										
209-63272	334 - 76	4									
	334 -177										
	334 -183										
	334 -194										
209-63273	338 - 48	2	DG205	M		0					
	339 - 81										
209-63274		1	DG 40								
209-63275		1	DG 41								
209-63276- 1	339 - 45	1									
209-63276- 2	339	1									
209-63276- 13	339 - 49	1									
209-63276- 21	339 - 47	1									
209-63276- 22	339	1									
209-63276- 31	339 - 48	1									
209-63276- 32	339	1									
209-63277- 1	339 - 50	1	DR192								
209-63277- 2	339	1	DR192								
209-63277- 19	339 - 51	1	DR192								
209-63277- 21	339 - 52	1	DR192								
209-63277- 23	339 - 53	1	DR192								
209-63278	339 - 68	1	DG 42								
209-63279	339 - 62	1	DL137								
209-63280	339 - 67	1	DL119								
209-63281	339 - 66	1	DG 44								
209-63282	339 - 63	1	DN164								
209-63283- 1	339 - 57	1									
209-63283- 2	339	1									
209-63284	339 - 54	1	DK115								
209-63285	339 - 56	1	DK116								
209-63286	339 - 55	1	DK117								
209-63287	339 - 18	2	DN 81								
209-63288- 1	339 - 38	1									
209-63288- 2	339	1									
209-63289	334 - 75	5									
	334 -176										
	334 -188										
	334 -198										
209-63290	334 - 77	5									
	334 -178										
	334 -189										
	334 -199										
209-63291- 1	334 -191	1									

PART NUMBER	FIGURE AND INDEX	TOTAL QTY.	MICRO-FILM NUMBER	MAINTENANCE CODE DATA: SOURCE CODE	INSTL CAPABILITY	PRE-INSTL CAPABILITY	RECOVERABILITY	SUPPORT EQUIPMENT	FEDERAL STOCK NUMBER DATA: COGNIZANCE CODE	FEDERAL STOCK NUMBER	MFG. CODE (TSMC)
209-63291- 2	334	1									
209-63291- 3	334 -192	1									
209-63291- 4	334	1									
209-63291- 5	334 -193	2									
209-63291- 11	334	1									
209-63291- 12	334	1									
209-63292		1	DL 98								
209-63293		1	DL120								
209-63294		1	DG207								
209-63296		1	DK175								
209-63297		1	DG264								
209-63297- 1	334 -112	1									
209-63297- 2	334	1									
209-63298	334 -121	1									
	334 -143										
209-63299		1	DG265								
209-63300		1	DG266								
209-63304		1									
209-63312- 1	336	1									
	337	1									
	343 - 32	1									
	344 - 34										
209-63312- 2	336	1									
	337	1									
	343	1									
	344										
209-63312- 11	337 - 54	1									
209-63312- 21		1	DJ121								
209-63313	287	1									
	287A										
	335	1									
209-63313- 31	287	1									
	287A										
	335										
209-63314	335 - 26	1									
209-63314- 9	335 - 28	2									
209-63315	335	1									
209-63315- 1		1	DM117								
209-63315- 23	335 - 94	1									
209-63315- 37		1	DM117	U							
209-63315- 39	335 - 95	1									
209-63315- 41	335	1									
209-63315- 43	335 - 58	1									
209-63315- 45	335 - 59	1									
209-63315- 47	335 - 70	1									
209-63315- 49	335 - 69	2									
209-63315- 63		1	DM117								
209-63315- 65	335	1									
209-63315- 69		1	DM117	U							
209-63315- 73	335 - 57	1									
209-63315- 77		1	DM117	M		0					
209-63315- 81	335 - 50	1									
209-63315- 83		1	DM117	M		0					
209-63315- 85	335 - 62	1									
209-63315- 86	335	1									
209-63315- 87	335 - 63	2									
209-63315- 89	335 - 64	2									
209-63315- 91		1	DM117	M		0					
209-63315- 93	335 - 65	2									
209-63315- 95		1	DM117	M		0					
209-63315- 97		1	DM117	M		0					
209-63315- 99		1	DM117	M		0					
209-63315-103		1	DM117	M		0					
209-63316- 1	335	1									
209-63316- 2	335	1									
209-63316- 5	335 - 18	2									
209-63316- 21	335 - 12	1									
209-63316- 22	335 - 13	1									
209-63316- 23	335 - 19	1									
209-63316- 25	335 - 20	1									
209-63317- 3	335	1									
209-63317- 5	335 - 82	1									
209-63317- 11	335	1									
209-63317- 21	335	1									
209-63318	335 - 39	1									
209-63319	335 - 40	1									
209-63319-122		1									
209-63320	335 - 46	1									
209-63321	335 - 44	1									
209-63324	335 - 41	1									
209-63326	335 - 74	1									
209-63327	335 - 80	1									
209-63328	335 - 30	1									
209-63328- 13	335 - 31	1									
209-63329		1							R	1680-609-4402	8210
209-63330		1	DJ 57						R	1680-609-4403	8210
209-63330- 3		1	DJ 57	U							
209-63330- 5		1	DJ 57	U							
209-63331- 1		1	DK 25						R	1680-609-4310	8210
209-63331- 2		1	DK 25						R	1680-609-4311	8210
209-63331- 3		1	DK 25	U							
209-63331- 4		1	DK 25	U							
209-63331- 5		1	DK 25	U							
209-63331- 6		1	DK 25	U							
209-63332- 11		1	DK 65						R	1680-609-4306	8210
209-63332- 21		1	DK 65						R	1680-609-4308	8210
209-63333		2	DG209								
209-63335	335 - 52	1									
209-63336	335 - 53	1									
209-63337	334 -103	1									
209-63338	335 - 25	1									
209-63339	335 - 81	2									
209-63340		1	DM138								
209-63340- 3	334 -166	4									
209-63340- 5	334 -190	1									

PART NUMBER	FIGURE AND INDEX	TOTAL QTY.	MICRO-FILM NUMBER	MAINTENANCE CODE DATA: SOURCE CODE	INSTL CAPABILITY	PRE-INSTL CAPABILITY	RECOVERABILITY	SUPPORT EQUIPMENT	FEDERAL STOCK NUMBER DATA: COGNIZANCE CODE	FEDERAL STOCK NUMBER	MFG. CODE (TSMC)
209-63340- 7	334 -179	1									
209-63341		1	DL 6								
209-63341- 3		1	DL 6	U							
209-63341- 41		1	DL 6								
209-63342- 3		1	DS101								
209-63342- 5	342 - 40	1									
209-63342- 7	342 - 3	1									
	342 - 21										
209-63344		1	DM214								
209-63345	335 - 22	1	DQ222								
209-63345- 5	335	2									
209-63346		1	DQ199								
209-63347	335 - 24	1	DQ200								
209-63349	337	1									
209-63349- 3		1	DR139	M		C					
209-63349- 5		1	DR139	M		C					
209-63349- 7		1	DR139	M		C					
209-63349- 11	337	1									
209-63350- 11	340 - 9	2									
209-63350- 21	340	1									
209-63351	334 -152	8		P	F	C	C				
209-63352- 11	334 -218	1									
209-63352- 12	334	1									
209-63352- 21	334	1									
209-63352- 22	334	1									
209-63353	334 -223	1									
	335 - 91	1									
209-63356	334 - 43	1									
209-63357	334 - 44	1									
209-63357- 5	334 - 45	1									
209-63357- 7	334 - 46	1									
209-63359	334 - 21	3									
209-63413- 1	285	1									
	334										
209-63413- 2	334	1									
209-63413- 71	285	1									
	285A										
	334										
209-63413-101	285	1									
	285A										
	334										
209-63413-102	285A	1									
	334										
209-63419		1	DL 42								
209-63422	334 -164	1									
209-63423	334 -166	1									
209-63424	334 -165	1									
209-63425	334 -161	2									
	334 -162										
209-63426	334 -157	1									
209-63427	334 -180	1									
209-63427- 3	334 -181	1									
209-63427- 5	334 -182	1									
209-63427- 7	334 -184	1									
209-63427- 11	334	1									
209-63513	119	1	DL328								
209-63513- 1	336	1	DL328						R	1680-609-4325	8210
	339										
	345 - 34										
	345A- 33										
209-63513- 2	336	1	DL328						R	1680-609-4326	8210
	339										
	345										
	345A										
209-63513- 31	336	1	DL328								
	339										
	345										
	345A										
209-63513- 32	336	1	CD328								
	339										
	345										
	345A										
209-63513- 51	339	1									
	345										
	345A										
209-63513- 52	339	1									
	345										
	345A										
209-63513- 61	336	1	CD328								
	339										
	345 - 34										
	345A										
209-63513- 62	336	1	CD328								
	339										
	345										
209-68027	330 - 39	1	BM172	M		O					
209-68027- 11	330	1	BM172	M		O					
209-56030	330 - 40	1	BG372	O1	F	O	C		R	1560-511-2542	ANAA
209-56110	330	1	BE120	U							
209-67710	86	1		M		O					
209-67710- 3		1		M		O					
209-67710- 5		1		M		O					
209-67710- 7		1		M		O					
209-67710- 9	86 - 53	1		M		O					
209-67711	86 - 24	1		M		O					
209-67711- 3	86	1		M		O					
209-67712	86	1		M		O					
209-67712- 3		1		M		O					
209-67712- 5		1		M		O					
209-67712- 11	86 - 49	1		M		O					
209-67713		1		M		O					
209-67713- 3		1		M		O					
209-67714	86 - 46	1		M		F					
209-67715	86 - 45	1		M		F					
209-67716	86 - 63	1		M		O					

PART NUMBER	FIGURE AND INDEX	TOTAL QTY.	MICRO-FILM NUMBER	MAINTENANCE CODE DATA: SOURCE CODE	INSTL CAPABILITY	PRE-INSTL CAPABILITY	RECOVERABILITY	SUPPORT EQUIPMENT	FEDERAL STOCK NUMBER DATA: COGNIZANCE CODE	FEDERAL STOCK NUMBER	MFG. CODE (TSMC)
209-67750		1	BX 14								
209-67751	86 - 7	1	CB121	M		O					
209-67751- 3	86	1	CB121	M		O					
209-67752	86 - 23	1	CE103	M		O					
209-67752- 3	86	1	CE103	M		O					
209-67755	86 - 20	1	BE123	M		F					
209-67756	86 - 19	1	CB122	M		F					
209-67761	86	1	BM173	M		O					
209-67761- 3		1	BM173	M		O					
209-67761- 5		1	BM173	M		O					
209-67761- 7		1	BM173	M		O					
209-67761- 11	86 - 27	1	BM173	M		O					
209-67762	86	1	BM174	M		O					
209-67762- 3		1	BM174	M		O					
209-67762- 5		1	BM174	M		O					
209-67762- 7		1	BM174	M		O					
209-67762- 9	86 - 36	1	BM174	M		O					
209-67763	86 - 14	1	BS155	M		O					
209-67763- 3		1	BS155	M		O					
209-67764	86 - 15	1	CA 62	M		O					
209-67764- 3		1	CA 62	M		O					
209-67764- 5		1	CA 62	M		O					
209-67765	86 - 21	1	CB123	M		O					
209-67765- 3		1	CB123	M		O					
209-67766	86 - 33	1	CB124	M		F					
209-67767	86 - 32	1	BE127	M		F					
209-68001		1	BV166	U							
209-68006		1	DK174	U							
209-68010	336	1									
209-68011- 1	336 - 7	1									
209-68011- 2	336	1									
209-68011- 3		1	CE 12	X1							
209-68011- 4		1	CE 12	X1							
209-68011- 5		1	CE 12	X1							
209-68011- 6		1	CE112	X1							
209-68011- 7		1	CE112	M		O					
209-68011- 8		1	CE112	M		O					
209-68011- 9		1	CE112	M		O					
209-68011- 10		1	CE112	M		O					
209-68011- 15		2	CE112	M		O					
209-68011- 19		2	CE112	M		O					
209-68011- 21		2	CE112	M		O					
209-68011- 27		4	CE112	M		O					
209-68011- 29		4	CE112	M		O					
209-68012- 1	336 - 3	1									
209-68012- 2	336	1									
209-68012- 3		1	BQ208	M		O					
209-68012- 4		1	BQ208	M		O					
209-68012- 5		2	BQ208	M		O					
209-68012- 6		2	BQ208	M		O					
209-68012- 7		2	BQ208	M		O					
209-68012- 8		2	BQ208	M		O					
209-68012- 9		2	BQ208	M		O					
209-68012- 10		2	BQ208	M		O					
209-68012- 11		1	BQ208	M		O					
209-68012- 12		1	BQ208	M		O					
209-68012- 13		1	BQ208	M		O					
209-68012- 14		1	BQ208	M		O					
209-68012- 15		2	BQ208								
209-68012- 17		4	BQ208	M		O					
209-68012- 19		4	BQ208	M		O					
209-68012- 21		4	BQ208	M		F					
209-68012- 23	336 - 6	1									
209-68014		1	DG284								
209-68014- 11	336 - 12	1									
209-68015	336 - 14	2									
209-68016	336 - 9	2									
209-68017	336 - 10	2									
209-68018		1	DQ110								
209-68018- 1	336 - 15	2									
209-68018- 2	336	2									
209-68019		1	DK181								
209-68020	336 - 16	1									
209-68021	336 - 11	1									
209-68021- 3		1	DN227	M		O					
209-68021- 5		1	DN227	M		O					
209-68021- 7		1	DN227	M		O					
209-68021- 11	336	1									
209-68182- 3		2	DN228	X1							
209-68182- 5		2	DN228								
209-68182- 7		2	DN228	X1							
209-68183- 3		2	DN229	M		O					
209-68183- 5		2	DN229	M		O					
209-68183- 7		2	DN229	M		O					
209-68183- 9		2	DN229	M		O					
209-68201		1	DK170								
209-68210	346	1							R	1440-609-5591	8210
	347										
	348 - 2										
209-68210- 11	347										
209-68210- 77	347	1									
209-68211		1	DR181								
209-68211- 3	344 - 32	3	DR181								
	345 - 32										
	346 - 32										
209-68211- 11	343 - 6	3	DR181								
	344										
	345										
	345A- 8	1									
	346										
	347 - 14										
209-68212- 1	344	1							R	1440-609-4409	8210
209-68212- 2	344	1							R	1440-609-4410	8210
209-68212- 11	343	1									
209-68217- 12	343	1									

PART NUMBER	FIGURE AND INDEX	TOTAL QTY.	MICRO-FILM NUMBER	MAINTENANCE CODE DATA: SOURCE CODE	INSTL CAPABILITY	MACHINE CAPABILITY	RECOVERABILITY	SUPPORT EQUIPMENT	COGNIZANCE CODE	FEDERAL STOCK NUMBER DATA: FEDERAL STOCK NUMBER	MFG. CODE (TSMC)
209-68213- 1	345	1							R	1440-609-4411	B210
209-68213- 2	345	1							R	1440-609-4412	B210
209-68213- 11	345A	1									
209-68213- 12	345A	1									
209-68214	269	1									
	269 - 47	1									
	347	1									
	348										
209-68214- 11	269	1									
	347	1									
	348										
209-68215	343 - 4	6	DS102						R	1440-610-1004	B210
	344 - 4										
	345 - 4										
	345A- 4										
	346 - 4										
	347 - 4										
209-68216- 3	346	1									
209-68216- 4	346 - 29	1									
209-68216- 5	346	1									
209-68216- 6	346 - 28	1									
209-68216- 7	346	1									
209-68216- 8	346 - 27	1									
209-68216- 31	346 - 8	1									
209-68216- 41	346 - 22	1									
209-68216- 42	346	1									
209-68216- 45	346 - 19	3									
	347 - 35										
209-68216- 49	346 - 16	1									
209-68216- 50	346	1									
209-68216- 59	346	1									
	347										
209-68216- 61	346 - 15	1									
	347 - 29										
209-68216- 63	346 - 14	2									
	347 - 30										
209-68216- 65	346 - 13	1									
	347 - 31										
209-68216- 67	346	1									
209-68216-101	347 - 17										
209-68216-131	347 - 18										
209-68216-141	347 - 41										
209-68216-183	347 - 22										
209-68216-187	347 - 38										
209-68217		1	DR317								
209-68217- 1	344 - 10	1	BG373								
209-68217- 2	344	1	BG373								
209-68217- 7	344 - 23	1	BG373								
209-68217- 8	344	1	BG373								
209-68217- 10		1	DR317	M		O					
209-68217- 17	344	1	BG373								
209-68217- 18	344 - 29	1	BG373								
209-68217- 21	344	1	BG373								
209-68217- 22	344 - 28	1	BG373								
209-68217- 23	344	1	BG373								
209-68217- 24	344 - 27	1	BG373								
209-68217- 27	344 - 18	2	BG373								
209-68217- 45	344 - 15	1	BG373								
209-68217- 46	344	1	BG373								
209-68217- 51	344 - 21	1	BG373								
209-68217- 67	343 - 13	1	BG373								
	344 - 14										
209-68217-101	343 - 9	1									
209-68217-102	343	1									
209-68217-107	343 - 21	1									
209-68217-108	343	1									
209-68217-121	343 - 27	1									
209-68218- 1	345 - 10	1	BG379								
209-68218- 2	345	1									
209-68218- 7	345 - 23	1	BG379								
209-68218- 8	345	1	BG379								
209-68218- 23	345 - 14	1	BG379								
	345A- 13										
209-68218- 33	345	1	BG379								
209-68218- 34	345 - 29	1	BG379								
209-68218- 35	345	1	BG379								
209-68218- 36	345 - 28	1	BG379								
209-68218- 43	345 - 18	2	BG379								
209-68218- 53	345 - 21	1	BG379								
209-68218- 59	345	1	BG379								
209-68218- 60	345 - 27	1	BG379								
209-68218- 75	345 - 15	1	BG379								
209-68218- 76	345	1	BG379								
209-68218- 77	345	1	BG379								
209-68218- 78	345	1	BG379								
209-68218- 91	345A- 27	1									
209-68218- 92	345A	1									
209-68218-101	345A- 9	1									
209-68218-102	345A	1									
209-68218-107	345A- 21	1									
209-68218-108	345A	1									
209-68218-143	345A- 28	1									
209-68218-144	345A	1									
209-68219	344 - 8	2									
	345 - 8										
209-68220	346 - 34	1									
	347 - 47										
209-68226	347 - 11	4									
	348 - 16										
209-68227	347 - 6	1									
	348 - 8										
209-68227- 13	347 - 74										
	348 - 9										
209-68227- 35	348 - 10	8									
209-68227- 41	347	1		M		O					

PART NUMBER	FIGURE AND INDEX	TOTAL QTY.	MICRO-FILM NUMBER	MAINTENANCE CODE DATA: SOURCE CODE	INSTL CAPABILITY	MACHINE CAPABILITY	RECOVERABILITY	SUPPORT EQUIPMENT	COGNIZANCE CODE	FEDERAL STOCK NUMBER DATA: FEDERAL STOCK NUMBER	MFG. CODE (TSMC)
	348										
209-68228	347 - 17	1									
	348 - 23										
209-68228- 27	347	8									
209-68228- 29	347	8									
	348 - 24										
209-68228- 31	347 - 18	1									
	347 - 23										
	348 - 25										
209-68228- 35	347	1									
209-68228- 39	348 - 10	1									
209-68228- 41	348 - 28	1									
209-68228- 43	347	1									
	348 - 39										
209-68228- 45	347	1									
209-68228- 51	347 - 22	1									
	348 - 29										
209-68228- 53	347	2									
	348 - 31										
209-68228- 54	347	2									
	348 - 32										
209-68228- 55	347	2									
	348 - 33										
209-68228- 57	347	2									
	348 - 34										
209-68228- 61	347 - 20	1		A		D					
	348 - 27										
209-68228- 71	347	1									
209-68229		1	DR320								
	347	1									
	348 - 13										
209-68230		1	DS 25								
	348 - 14	2									
209-68231		1	DS 26								
209-68232	347	1	DS 14								
	348 - 1										
209-68233	269 - 17	1									
	348 - 6	1									
209-68234	347 - 28	3									
	348 - 42										
209-68235	342 - 14	1									
209-68235- 3	1			M		O					
209-68236	347 - 36	1									
	348										
209-68236- 11	347	1									
	348 - 53										
209-68236- 21	347	1									
	348 - 54										
209-68237	347 - 2	4		M		O					
	348 - 3										
209-68238	347 - 5										
209-68266	347 - 1	1	DS 42								
	348										
209-68266- 27	347	1	DS 42	M		O					
	348 - 7										
209-69001	330	1	CA 17	U							
209-69005	330 - 1	1	DJ 88	A		F					
209-69005- 11	330 - 2	1	DJ 88								
209-69018		1	BM175								
209-69018- 5		1	BM175								
209-69029	330 - 28	2	DG169	M		O					
209-69030	330 - 25	1	BV256	M		O					
209-69217	328 - 53	1	BG373	M		O					
209-69217- 3		1	BG373	M		O					
209-69217- 5		1	BG373	M		O					
209-69217- 7		1	BG373	M		O					
209-69218		1	BG379	M		O					
209-69218- 3		1	BG379	M		O					
209-69317	328 - 53	1	BG377	M		O					
209-69317- 3		1	BG377	M		O					
209-69317- 5		1	BG377	M		O					
209-69317- 7		1	BG377	M		O					
209-71001		1	BM176	U							
209-71002		1	BX 59	U							
209-71111		1	DN 10	U							
209-71113- 1		1	DQ 91	M		F					
209-71113- 3		1	DQ 91	M		F					
209-71113- 7		1	DQ 91	M		F					
209-71113- 9		1	DQ 91	M		F					
209-71113- 13		1	DQ 91	M		F					
209-71113- 15		1	DQ 91	M		F					
209-71113- 21		1	DQ 91	M		F					
209-71113- 31		1	DQ 91	M		F					
209-71113- 41		1	DQ 91	M		F					
209-71113- 51		1	DQ 91	M		F					
209-71113- 61		1	DQ 91	M		F					
209-711130- 11	212 - 17	1									
209-71114		4	DR103	M		F					
209-71114- 3		4	DR103	M		F					
209-71117		1	BG378	M		O					
209-71118		1	BG375	M		O					
209-71118 3		1	BG375	M		O					
209-71118 5		1	BG375	M		O					
209-71119		1	BG376	M		O					
209-71122		1	DG267	M		F					
209-71122- 3		1	DG267	M		F					
209-71122- 5		1	DG267	M		F					
209-71122- 7		1	DG267	M		F					
209-71122- 9		1	DG267	M		F					
209-71123	359	1	BT219								
209-71124		1	BW167	U							
209-71126		1	DR172								
	212 - 16	1									
209-71127	122 - 7	2	DM178								
	212 - 5										

PART NUMBER	FIGURE AND INDEX	TOTAL QTY.	MICRO-FILM NUMBER	MAINTENANCE CODE DATA: SOURCE CODE	INSTL CAPABILITY	PR-INSTL CAPABILITY	RECOVERABILITY	SUPPORT EQUIPMENT	FEDERAL STOCK NUMBER DATA: COGNIZANCE CODE	FEDERAL STOCK NUMBER	MFG. CODE (TSMC)
209-71128		1	DN274						R	5935-575-9355	E212
209-71129	33 - 41	1	DJ267								
	122 - 8										
	212 - 6										
209-71130		1	DL 9	M		O					
209-71130- 11		1	DL 9	M		O					
209-71131		1	DP 43	U							
209-71131- 21		1	DP 43	U							
209-71132		1	DN 15	U							
209-71133		1	DJ175	M		O					
209-71211		1	DP 27	U							
209-71213	269 - 1	1									
209-71214	210 - 2										
	207 - 9	1	BV196	M		O					
	208 - 9										
209-71214- 3		1	BV196	M		O					
209-71215		1	BM178	M		F					
209-71216		1	BM179	M		O					
209-71217		1	BG391	M		O					
209-71218		1	DP107	M		O					
209-71219		1	BM180	M		O					
209-71222	210 - 9	2	BE129	M		O					
209-71223		1	BM181	M		O					
209-71223- 3		1	BM181	M		O					
209-71224		1	BV214	M		F					
209-71224- 3		1	BV214	M		F					
209-71225- 1	210	1	BW 70	P	F	O	C		R	1560-511-2578	ANAA
209-71225- 2	210 - 12	1	BW 70	P	F	O	C		R	1560-511-2590	ANAA
209-71225- 3		1	BW 70	M		O					
209-71225- 4		1	BW 70	M		O					
209-71225- 5		2	BW 70	M		O					
209-71226	210 - 7	1	BW 38	M		O					
	230										
	231 - 23										
209-71226- 3		2	BW 38	M		O					
209-71226- 5		2	BW 38	M		O					
209-71226- 7		2	BW 38	M		O					
209-71226- 11		1	BW 38	M		O					
209-71227	210 - 21	1	BM182	P	F	O	C		R	1560-369-9332	ANAA
209-71227- 3		1	BM182	M		O					
209-71227- 5		1	BM182	M		O					
209-71227- 7		1	BM182	M		O					
209-71227- 9		1	BM182	M		O					
209-71228- 3		1		M		O					
209-71228- 4		1		M		O					
209-71228- 5		2		M		O					
209-71228- 11	210 - 3	1		M		O					
209-71228- 12	210 - 4	1		M		O					
209-71229	210 - 19	2	BG390	M		O					
209-71230	210 - 23	1	BG393	M		O					
209-71231	210 - 13	2	BE130	M		O					
209-71232	210 - 20	1	BG392	M		O					
209-71233	210	1	BG395	M		F					
209-71234	210 - 52	1									
		1	BM183	M		O					
209-71234 3		1	BM183	M		O					
209-71235	210 - 47	1									
		1	BG394	M		F					
209-71236	210 - 22	1	BM184	M		O					
209-71236- 3		1	BM184	M		O					
209-71236- 5		1	BM184	M		O					
209-71236- 7		1	BM184	M		O					
209-71236- 9		1	BM184	M		O					
209-71237	210 - 8	1	BW157	A		F					
209-71237- 3		2	BW157	M		O					
209-71237- 5		1	BW157	M		O					
209-71238		1	BM185	M		O					
209-71238- 3		1	BM185	M		O					
209-71239	210 - 46	1									
		1	BM186	M		O					
209-71239- 3		1	BM186	M		O					
209-71239- 5		2	BM186	M		O					
209-71242	210	1									
		1	BM187	A		F					
209-71243	210 - 1										
	207 - 5	1		A		F					
	208 - 5										
209-71244	209 - 1										
	207 - 4	2		A		F					
	208 - 4										
209-71245	209 - 22	1	DJ176	A		F					
209-71245- 11	122 - 6	1	DJ176	P1	F	O	R		R	5826-589-1341	F541
	209 - 26										
209-71245- 21	122	1	DJ176	A		F			R	5826-589-1341	F541
	209										
209-71246		1	DL 10	M		O					
209-71246- 3		1	DL 10	M		O					
209-71247		1	DH 87	M		O					
209-71247- 3		1	DH 87	M		O					
209-71248		1	DH 92	M		O					
209-71249		1	DM215	M		O					
209-71249- 3		1	DM215	M		O					
209-71411		1	DP288	U							
209-71414- 3		1	DM184	M		O					
209-71414- 5		1	DM184	M		O					
209-71414- 7		1	DM184	M		O					
209-71414- 11		1	DM184	M		O					
209-71414- 13		1	DM184	M		O					
209-71414- 15		1	DM184	M		O					
209-71414- 19		1	DM184	M		O					
209-71414- 21		1	DM184	M		O					
209-71414- 23		1	DM184	M		O					
209-71414- 25		1	DM184	M		O					
209-71414- 29		1	DM184	M		O					
209-71414- 31		1	DM184	M		O					

PART NUMBER	FIGURE AND INDEX	TOTAL QTY.	MICRO-FILM NUMBER	MAINTENANCE CODE DATA: SOURCE CODE	INSTL CAPABILITY	PR-INSTL CAPABILITY	RECOVERABILITY	SUPPORT EQUIPMENT	FEDERAL STOCK NUMBER DATA: COGNIZANCE CODE	FEDERAL STOCK NUMBER	MFG. CODE (TSMC)
209-71414- 41		1	DM184	M		O					
209-71414- 51		1	DM184	M		O					
209-71415- 3		1	DJ 97	M		O					
209-71415- 5		1	DJ 97	M		O					
209-71415- 7		1	DJ 97	M		O					
209-71415- 9		1	DJ 97	M		O					
209-71415- 11		1	DJ 97	M		O					
209-71415- 13		1	DJ 97	M		O					
209-71415- 15		1	DJ 97	M		O					
209-71415- 17		1	DJ 97	M		O					
209-71415- 21		1	DJ 97	M		O					
209-71415- 27		1	DJ 97	M		O					
209-71417		1	BM188	M		O					
209-71417- 3		1	BM188	M		O					
209-71418	211 - 3	1	BM189	M		O					
209-71418- 5		1	BM189	M		O					
209-71419		1	BG396	M		O					
209-71425	209 - 16	1	BV296	M		O					
209-71425- 3		1	BV296	M		O					
209-71425- 5		1	BV296	M		O					
209-71425- 7		1	BV296	M		O					
209-71425- 9		1	BV296	M		O					
209-71425- 11		1	BV296	M		O					
209-71425- 13		4	BV296	M		O					
209-71425- 21		1	BV296	M		O					
209-71430		1	BM190	M		O					
209-71430- 3		1	BM190	M		O					
209-71430- 5		1	BM190	M		O					
209-71430- 7		1	BM190	M		O					
209-71431		1	BM191								
209-71431- 5		1	BM191	M		O					
209-71431- 7		1	BM191	M		O					
209-71432		1	BM192	M		O					
209-71434		1	BG397	M		O					
209-71435		1	BM193	M		O					
209-71436		1	BM194	M		O					
209-71437		1	BM195	M		O					
209-71438- 3		1	BM196	M		O					
209-71439- 3		1	BM197	M		O					
209-71440		1	BM198	M		O					
209-71440- 3		1	BM198	M		O					
209-71450		4	DJ233	M		O					
209-71450- 3		4	DJ233	M		O					
209-71451		1	BE131								
209-71451- 3		1	BE131								
209-71452		1	AW470	M		O					
209-71452- 3		1	AW470								
209-71611	358	1	DR191	U							
209-71613	90	1	BG399	M		O					
209-71614		1	DQ171	M		O					
209-71614- 3		1	DQ171	M		O					
209-71615	209 - 24	1	BW 18	S		M			O		
	358										
209-71615- 3		1	BW185	M		O					
209-71615- 5		1	BW185	M		O					
209-71615- 7		1	BW185	M		O					
209-71616		1	BS156	M		O					
209-71616- 3		1	BS156	M		O					
209-71616- 5		1	BS156								
209-71617- 1		1	BS189	M		O					
209-71617- 2		1	BS189	M		O					
209-71617- 3		1	BS189	M		O					
209-71617- 4		1	BS189	M		O					
209-71617- 5		1	BS189	M		O					
209-71617- 6		1	BS189	M		O					
209-71622	122 - 10	1									
	212 - 8										
209-71622- 7	74 - 8	1	DP249								
	88 - 78										
	122 - 12										
	212 - 10										
209-71622- 9	74	1	DP249								
209-71622- 11	74	1	DP249								
209-71623		1	DM216						R	5841-575-9354	E212
209-71624	74	1	DM217	M		O					
209-71625		1	DP190	M		O					
209-73012		2	BG400	M		F					
209-73012- 3		2	BG400	M		F					
209-73013	44 - 76	2	BG403	M		F					
209-73013- 3		2	BG403	M		F					
209-73014	44 - 75	2	BG402	M		F					
209-73310- 3	353 - 12	1	BV 23	M		O					
209-73310- 5	353 - 30	1	BV 23	M		O					
209-73310- 7	353 - 27	1	BV 23	M		O					
209-73310- 9	353 - 31	1	BV 23	M		O					
209-73310-103		1	BV 23	M		O					
209-73310-105		1	BV 23	M		O					
209-73310-107		1	BV 23	M		O					
209-73310-109		1	BV 23	M		O					
209-73311	353 - 33	1		M		O					
209-73312	353 - 32	1	BV 42	M		O					
209-73313		1	DQ157								
209-73313- 3	353 - 32	1	DQ157	P1	F	O	S		R	4730-595-4646	ANAA
209-73317	352	1							R	1660-546-1124	ANAA
	353 - 17										
209-73350		1	DK173	U							
209-73350- 23		1	DK173	M		F					
209-73352- 5		1	DK161	M		F					
209-73352- 7		1	DK161	M		O					
209-73352- 9		1	DK161	M		O					
209-73352- 11		1	DK161	M		O					
209-73352- 15	352 - 25	1	DK161	M		F					
209-73352- 17		1	DK161	M		F					
209-73352- 19	352 - 33	1	DK161	M		F					
209-73352- 21	352 - 34	1	DK161	M		F					

PART NUMBER	FIGURE AND INDEX	TOTAL QTY.	MICRO-FILM NUMBER	MAINTENANCE CODE DATA: SOURCE CODE	INST'L CAPABILITY	PRE-INST'L CAPABILITY	RECOVERABILITY	SUPPORT EQUIPMENT	COGNIZANCE CODE	FEDERAL STOCK NUMBER DATA: FEDERAL STOCK NUMBER	MFG. CODE (TSMC)
209-73352- 23	352 - 29	1	DK161	M		F					
209-73352- 25	352	1	DK161	M		O					
209-73352-115		1	DK161	M		F					
209-73352-117		1	DK161	M		F					
209-73352-119		1	DK161	M		F					
209-73352-121		1	DK161	M		O					
209-73352-123		1	DK161	M		F					
209-73353	352	1	DH235	A		F					
209-73354	352	1	DH255	A		F					
209-73355- 3	352 - 13	1	DH256	A		F					
209-73355- 5	352 - 11	1	DH256	A		F					
209-73355- 7	352 - 23	1	DH256	A		F					
209-73356	352 - 47	1	DN196	M		O					
209-73356- 3		1	DN196	M		O					
209-73356- 5		1	DN196	M		O					
209-73356- 7		1	DN196	M		O					
209-73356- 9		1	DN196	M		O					
209-73357	352 - 7	1	CA247	A		F					
209-73358	37 - 15	1	BL285	M		O					
	352 - 24										
209-73359	352 - 6	1									
209-73359- 3	352 - 6	1	DK131	M		O					
209-73361	352 - 8	1	BL283	P1	F	O	C		R	5305-638-2043	ANAA
209-73362	352 - 9	1	BL288	M		O					
209-73363	55	1	BL 2	M		O					
	57A										
209-73363- 3	57 - 8	1	BL 2	M		O					
	57A										
209-73363- 21	57 - 8	1	BL 2	M		O					
	57A										
209-73363- 31	55	1	BL 2	M		O					
	57A										
209-73366	352 - 5	1	BL287	P1	F	O	C		R	5305-639-5982	ANAA
209-73367		1	CY 12	M		O					
209-73367- 11		1	CY 12	M		O					
209-73368	352 - 48	1		M		O					
209-73368- 3		1		M		O					
209-73369	352 - 49	1		M		O					
209-73370	352 - 36	1	DH236	A		F					
209-73371		1	DN173								
209-73503	358	1	DN 12	U							
209-73505		6	BE132	M		O					
209-73513		1	DN 9	U							
209-73514- 1		1	CB 11	M		O					
209-73514- 2		1	CB 11	M		O					
209-73515		1	BE133	M		O					
209-73545	242 - 20	44	DP148	P1	F	O	C		R	6340-589-1343	D446
209-73545- 3	242	58	DP148	M		O					
209-73546	242 - 19	65	DM148								
	356	10									
209-73546- 3	242	1									
209-73547	242 - 18	14	DM143	P1	F	O	C		R	6340-589-1342	D446
209-73547- 3	242	19	DM143	M		O					
209-73548		1	DK103	P1	F	O	C		R	1560-613-4956	ANAA
209-73548- 3		1	DK103	M		O					
209-74001		1	BM203	U							
209-74002		1	BX 46	U							
209-74009- 1		1	BG404	M		F					
209-74009- 3		1	BG404	M		F					
209-74009- 5		1	BG404	M		F					
209-74009- 11		1	BG404	M		F					
209-74020	213 - 57	2	BE134	M		O					
209-74031		1	DX 17	U							
209-74111		1	OL 72	U							
209-74135		1	AV 61	M		F					
209-74135- 7		5	AV 61	M		F					
209-74135- 9		2	AV 61	M		F					
209-74135- 11		1	AV 61	M		F					
209-74135- 21		1	AV 61	M		F					
209-74137	213	1	BM207	A		F					
209-74138- 1	213 - 62	1	BM204	M		O					
209-74138- 2	213 - 63	1	BM204	M		O					
209-74138- 3		1	BM204	M		O					
209-74138- 4		1	BM204	M		O					
209-74138- 5		2	BM204	M		O					
209-74145	213 - 55	1	BG407	M		O					
209-74146		1	BG406	M		O					
209-74150	122	1	AZ 19	A		F					
	212										
	213 - 12										
	213 - 40										
	214										
	215 - 11										
	216 - 11										
	265 - 1	1									
209-74150- 11		1	AZ 19	A		F					
209-74150- 31	214	1	AZ 19								
209-74151	214 - 22	1	AY165	M		O					
209-74151- 3		1	AY165	M		O					
209-74151- 5		1	AY165	M		O					
209-74151- 17		1	AY165	M		O					
209-74151- 31	214	1	AY165	M		O					
209-74152	214 - 18	1	AX248	M		O					
209-74152- 3		1	AX248	M		O					
209-74153		1	BV195	M		O					
209-74153- 7		1	BV195	M		O					
209-74160	213 - 8	1	BM205	M		O					
209-74160- 3		1	BM205	M		O					
209-74211		1	BV306	U							
209-74215		1	BE135	M		O					
209-74220	213 - 38	1	BG409	P1	F	O	C		R	1560-569-9333	ANAA
209-74221	213 - 37	1	DG270	M		O					
209-74221- 3		1	DG270	M		O					
209-74222	213	1	CA270	A		F					
209-74222- 3	213 - 36	1	CA270	M		O					

PART NUMBER	FIGURE AND INDEX	TOTAL QTY.	MICRO-FILM NUMBER	MAINTENANCE CODE DATA: SOURCE CODE	INST'L CAPABILITY	PRE-INST'L CAPABILITY	RECOVERABILITY	SUPPORT EQUIPMENT	COGNIZANCE CODE	FEDERAL STOCK NUMBER DATA: FEDERAL STOCK NUMBER	MFG. CODE (TSMC)
209-74223		1	BG408	M		O					
209-74224		1	BM209	M		O					
209-74224- 3		1	BM209	M		O					
209-74225		1	BE136	M		O					
209-83235- 43	337 - 22	1									
209-85454		AR	DM 8								
209-85534		AR	DQ201								
209-89224		AR	DN200								
209-89231		AR	DQ246								
209-89236		AR	DP108								
209-89273		AR	DJ260								
209-89287		AR	DR 5								
209-89293		AR	DQ119								
209-89298		AR	DR183								
209-89311		AR	DM 6								
209-89321		AR	DN284								
209-89332		AR	DM 1								
209-89339		AR	DH218								
209-89369		AR	DN256								
209-89376		AR	DQ120								
209-89377		AR	DS105								
209-89379		AR	DP111								
209-89385		AR	DR 71								
209-89392		AR	DR161								
209-89398		AR	DS 27								
209-89399		AR	DP150								
209-89419		AR	DS103								
209-89428		AR	DP191								
209-89440		AR	DR 72								
209-89468		AR	DR226								
209-89851		1	DP294								
209-89851- 10		1	DP294								
209-89851- 20	228	1									
	264	1									
	336	1									
	337	1									
209-89851- 30	264	1	DP294	A		F					
	333										
209-89851- 40	264	1	DP294	A		F					
209-89851- 50	228	1									
	264	1	DP294	A		F					
209-89851- 60	336	1									
	337	1									
		1	DP294	A		F					
209-89851- 70	264	1	DP294	A		F					
	333	1									
209-89852	86	1		A		F					
209-89852- 10	86	1		A		F					
209-89852- 11	119	1									
209-89852- 12	119	1									
209-89852- 21	119	1									
209-89852- 22	119	1									
209-89853	121	1	DG214	A		F					
209-89853- 10	121	1	DG214	A		F					
209-89853- 20	121	1	DG214	A							
209-89853- 30	121	1	DG214	A							
209-89854	119	1									
	228	1									
	336	1									
	338	1	DR 73	A		F					
	342	1									
209-89855	336	1									
		1	BS 98	U							
209-89856		1	DP282	U							
209-914016		1	DR142								
209-914070		1	DM168								
209-914450		1	DM179								
209-917038- 1	357	4	BG415						R	5305-639-7346	G192
209-917038- 2		1	BG415								
209-917038- 3	171 - 30	4	BG415	U					R	5305-639-7345	G192
	171 - 66										
209-917038- 5		1	BG415								
209-917038- 7		2	BG415						R	5305-639-7344	G192
209-917038- 9	18 - 25	6	BG415						R	5305-639-7347	G192
	18 - 57										
	18 - 78										
209-918004- 1	21	1	DQ 57								
209-918004- 2	21	1	DQ 57								
209-918004- 11	21	1	DQ 57								
209-918004- 12	21	1	DQ 57								
209-918004- 15	21 - 66	1	DQ 57								
209-918004- 16	21	1	DQ 57								
209-918004- 27	10 - 88	1	DQ 57								
209-918004- 28	10	1	DQ 57								
209-918004- 33	9 - 42	1	DQ 57								
209-918004- 34	9	1	DQ 57								
209-918004- 41	21 - 70	1	DQ 57								
209-918004- 43	21 - 69	1	DQ 57								
209-918004- 77	21 - 71	1	DQ 57								
209-918004- 79	21 - 73	1	DQ 57								
209-918004- 87	21 - 82	2	DQ 57								
	21 -103										
209-921011		1	DM 16								
209-921013		1	DQ259								
209-921018		1	DQ258								
209-924408	92 - 31	2									
209-931659		1	DL173								
209-933201		1	BW 54								
209-942003		1	DK197								
209-942004		1	DQ142								
209-942004- 3		1	DQ142								
209-942004- 5		1	DQ142								
209-942004- 7		1	DQ142								
209-942004- 9		1	DQ142								
209-942006- 3		1	DN116								

PART NUMBER	FIGURE AND INDEX	TOTAL QTY.	MICRO-FILM NUMBER	MAINTENANCE CODE DATA: SOURCE CODE	INST'L CAPABILITY	PRE-INST'L CAPABILITY	RECOVERABILITY	SUPPORT EQUIPMENT	FEDERAL STOCK NUMBER DATA: COGNIZANCE CODE	FEDERAL STOCK NUMBER	MFG. CODE (TSMC)
209-942006- 5		1	DN116								
209-942012		1	CL348								
209-942014		1									
209-948006		1	DN306								
209-948081		1	DP112								
209-948085		4	BM216								
209-948088		2	BM217								
209-948135	PG. 1012	1	DN235								
209-948159	99 - 17	1									
209-948160		1	BM223								
209-948162		1	DH 47								
209-948205		1	BM225								
209-948221		1	DP113								
209-948223		1	DN296	U							
209-948224		1	DN292	U							
209-948230		1	DH 24								
209-948234		1	DG 49								
209-948246		2	DP114								
209-948250		1	DS 20								
209-948300		1	DP151								
209-94831- 3		1									
209-948310		1									
209-948322		2									
209-948351- 1		2	BM226	U							
209-948351- 2		2	BM226	U							
209-951020		1	DJ110								
209-951031		1	DH257								
209-951088		1	DM114								
209-951093		1	DH258								
209-951094		1	DH259								
209-952105		1	BV163								
209-952330- 1		1	BW174								
209-952330- 2		1	BW174								
209-952331		1									
209-952509		1	BN 69								
209-952604		1	DL226								
209-952606		1	DK104								
209-952607		1	DK105								
209-952608		1									
209-952609		1	DL257								
209-952617		1	DK 95								
209-952713		2	DJ 83								
209-953003		1	DN304								
209-953004		1	DK 24								
209-953210		1	DO 39								
209-954002		1	DL155								
209-954022		2									
209-954035		1	BG385								
209-954072		2	BG387								
209-954215	228 - 28	1									
209-954274		1	DJ273	A		F					
209-954275		1		M		D					
209-954275- 3		1		M		O					
209-954276		1	DJ281								
209-954277		1		M		O					
209-954277- 3		1		M		D					
209-954278		1		M		D					
209-954278- 3		1		M		O					
209-954279- 5		1		M		D					
209-954279		1	DJ234	M		O					
209-954280		1		M		O					
209-954286		1	DH260								
209-954287- 11		1									
209-954287- 21		1									
209-954287- 41		1	DO108								
209-954287- 51		1	DO108								
209-954287- 71	244 - 4	1									
209-954295		1	DJ261						R	5945-575-9357	D334
209-954298		1	DN236								
209-954303		1	DS 88								
209-954304		1	DQ122								
209-954304- 3		1	DQ122								
209-954308		1	DP285								
209-954318		1	DP283								
209-954361		1	BW196								
209-954385		1	DQ244								
209-954702		1	DJ 95								
209-954705		1	DN 97								
209-954710		1	DL335								
209-954717		1	DN199								
209-954718		1	DL227								
209-958065		1	DM 80								
209-958099		1	DQ226								
209-958744		1	DL100								
209-958775		1	DL101								
209-958778		1	DL102								
209-961011- 1		1	BM243								
209-961011- 2		1	BM243								
209-961012- 1		1	BM244								
209-961012- 2		1	BM244								
209-961021		4		U							
209-961023		1	BM245								
209-961027		1									
209-963245		9	DH 93	U							
209-963419		1	DK211								
209AD	288	1									
210-8-0100-3	327 - 9	1		P1	M	O	S		R	1660-303-8607	YCNL
210-8D	PG. 1017	1									
	PG. 1025										
2100	PG. 1004	1									
	284A- 24	1									
21027	363 - 18	1							R	5305-151-2764	G192
2118-5HS	227 - 3	2							R	5945-575-9358	D334
	227 - 17										
	227 - 18										

PART NUMBER	FIGURE AND INDEX	TOTAL QTY.	MICRO-FILM NUMBER	MAINTENANCE CODE DATA: SOURCE CODE	INST'L CAPABILITY	PRE-INST'L CAPABILITY	RECOVERABILITY	SUPPORT EQUIPMENT	FEDERAL STOCK NUMBER DATA: COGNIZANCE CODE	FEDERAL STOCK NUMBER	MFG. CODE (TSMC)
	282 - 3										
212-12	334	1									
212-16D	PG. 1017	1							R	4730-287-0568	G250
	PG. 1025										
2122-D-HL		1									
214-16	71	14		M		O			R	5325-639-4280	GH80
215-05003		1	DP 41								
215-05006		1	DG116								
215-05008		1	DH 88								
215-31006	33 - 44	2	AS 29	M		F					
215-31006- 3	33	2	AS 29	M		F					
215-31007- 1		1	AS 39	M		O					
215-31007- 2		1	AS 39	M		O					
215-31007- 3		1	AS 39	M		O					
215-31007- 4		1	AS 39	M		O					
215-31012		1	DK196								
215-31110		1	DR104								
215-31246- 5		4		M		O					
215-31516		1	DK162								
215-31519		1	DK163								
215-31520		1	DK164								
215-42010		1	DN 50								
215-48101- 1		1	DH239						R	1560-570-2334	ANAA
215-51016		1	DR162								
215-51018		1	DG273								
215-51025		1	DQ202								
215-520101		1	DR 74								
215-520103		1	DL103								
215-520105		1	DL 74						R	1560-561-7103	ANAA
215-520106		1	DK169								
215-520110	205 - 10	1	BT 5	M		O					
215-520111- 5		1		M		O					
215-520111- 7		1		M		O					
215-520111- 17		1		M		O					
215-520111- 19		1		M		O					
215-520111- 21		1		M		O					
215-520111-103	205 - 15	1	CE 34	M		D					
215-520111-105	205 - 11	1	CE 34	M		D					
215-520111-115	205 - 13	1	CE 34	M		D					
215-520111-117	205 - 13	1	CE 34	M		D					
215-520111-119	205 - 11	1	CE 34	M		D					
215-520114		1									
215-520116	205 - 41	1		M		D					
215-520118- 3	205 - 43	1	BP141	M		D					
215-520121	205 - 47	1	BR 93	M		D					
215-520130		1	DP291								
215-520134		1	DL139								
215-520146		1	DG306								
215-520147		1	DK148								
215-520169		1	DN140								
215-520170		1	DG 59								
215-520174		1	DK125								
215-520175		1	DN159								
215-520177		1		M		O					
215-520181		1	DK106								
215-520183		1	DS 12								
215-520190		1	DL104								
215-520191		1	DL126								
215-520192		1	DL127								
215-520193		1	DM 9								
215-520194		1	DL140								
215-520195		1	DL141								
215-520196		1	DL128								
215-520197		1	DL106								
215-520198		1	DL129								
215-520199		1	DL130								
215-520200		1	DR 79								
215-520201		1	DL258								
215-52021	193 - 3	1	DS 36	P1					R	1560-560-6359	ANAA
215-52022- 3		1	DL107						R	1560-511-2595	ANAA
215-52064		1	DG 92								
215-52079		1	DK122								
215-52080		1	DK123								
215-52085- 5		1									
215-52085- 7		1									
215-52086		1	DK124								
215-52092		1									
215-52100		1	DG134						R	1560-561-7105	ANAA
215-52108	179 - 10	1	DN163	M		O					
215-52155- 3		1		M		O					
215-52219		1	DN174								
215-52220		1	DN175								
215-52221		1	DN166								
215-52711		1		M		O					
215-53125		1	DJ 13								
215-53153		1	DG160								
215-53155		1	DH161								
215-53165		1	DG150								
215-53168		1	DH288								
215-53172		1	DG155								
215-952052		1	DK126								
215-954202		1	DK127								
215-954711		1	DN231								
215202-8A		1									
2170-2	123 - 52	1		P1	F	O	S		R	5930-504-8666	V170
	125 - 42	1									
	245 - 8										
	245 - 10										
	288 - 13										
2182-10	339	1							R	5935-303-8131	D336
2182-11	339	1							R	5935-259-2570	D336
2182-17		1									
2182-2	PG. 1015	1		P1					R	5935-502-1815	D336
	PG. 1024										
2182-7	334	1									

PART NUMBER	FIGURE AND INDEX	TOTAL QTY.	MICRO-FILM NUMBER	MAINTENANCE CODE DATA: SOURCE CODE	INSTL CAPABILITY	PRE-INSTL CAPABILITY	RECOVERABILITY	SUPPORT EQUIPMENT	FEDERAL STOCK NUMBER DATA: COGNIZANCE CODE	FEDERAL STOCK NUMBER	MFG. CODE (TSMC)
	335 - 67	1									
	342	1									
2182-8		2									
2182-9	339	1							R	5935-198-9610	D336
21885	284A- 23	1									
22-A5-02		142							R	5310-275-4311	G190
22-1754-02		2							R	5310-638-9404	G190
22-3876		1									
22-4725		1									
22A1-02		1									
22A1-40		11									
22A17-02	12	136							R	5310-274-3251	G190
	35										
	39										
	71										
	88										
22A17-048	71	14							R	5310-274-3265	G190
22A17-048BC100		1									
22A17-054		6									
22A17-22-02	39	12									
22A17-22-02BC100		1									
22A17-22-048		12									
22A17-22-62		16									
22A17-22-82		2									
22A17-82	44	12									
22A17A-048	87	1									
22A17A02		12									
22A17A048		4									
22A21-22-048		8									
22A21-22-048BC100		3									
22A21-22-054		32							R	5300-C00-1402	G190
22A21-22-62		4									
22A21-22-82		3									
22A217-22-02	35	32									
	37										
	44										
	72										
	358										
22A217-22-02BC100	74	5									
22A217-22-048	45	13									
22A217-22-62		16							R	5300-C00-1478	G190
22A217-22-82	71	17									
22A217A048		1									
22A24-02	88	9							R	5310-596-8706	G190
22A27-02		4									
22A27-22-02	36	9									
22A27-22-82		5									
22A35-02	44	36							R	5310-274-3196	G190
	71										
	74										
	88										
22A35-82		4									
22A35-82BC100		2									
22A38-02	33	98							R	5310-596-7728	G1AN
	74										
	78										
	88										
22A38-02BC	74	10									
22A38-82	71	19							R	5310-275-4294	G190
22A38-82BC	33	3									
22A38-82BC100		3									
22A5-02	10 - 58	2									
	39	68							R	5310-275-4311	G190
	42										
	43										
	44										
	47										
	69										
	88										
22A5-02-054		4									
22A5-02BC		2							R	5310-638-9418	G190
22A5-02BC100		8									
22A5-048		10									
22A5-054	43	5							R	5310-275-4306	G190
22A5-22		20									
22A5-82		4							P	5310-275-4310	G190
22A7-68-62		3									
22A77-68-82		1									
22FH-440		298									
22FT-428		12									
22FT-52		2									
22FT-524	90 - 10	2									
22FT-820		1							R	5300-C00-1402	G190
22G1-02		4		M		O					
22G1-048	10 - 64	12									
	10 - 66										
22G1-054J10		3							R	5310-208-2306	G190
22G1-054J8-9	91	1									
22G1-82		1							R	5310-188-7695	G190
22K3-02	60 - 10	4		P1					R	5310-298-9064	G190
	60 - 15										
	61 - 9										
22NA1-02		2									
22NA1-02BC		1									
22NA1-048		3		M		O					
22NA1-40		10							R	5310-596-7308	G190
22NA17-02		3							R	5310-274-3251	G190
22NA17-048		2									
22NA17A-02	33	6									
	88										
22NA17A-048	33	3							P	5310-274-3265	G190
	87										
22NA17A02		6		M		O					
22NA17A048		14		M		O					
22NA1999-02		50		M		F					

PART NUMBER	FIGURE AND INDEX	TOTAL QTY.	MICRO-FILM NUMBER	MAINTENANCE CODE DATA: SOURCE CODE	INSTL CAPABILITY	PRE-INSTL CAPABILITY	RECOVERABILITY	SUPPORT EQUIPMENT	FEDERAL STOCK NUMBER DATA: COGNIZANCE CODE	FEDERAL STOCK NUMBER	MFG. CODE (TSMC)
22NA21-22-02		4		P1							
22NA21-22-048		6							R	5300-C00-1401	G190
22NA21-22-048BC		5									
22NA21-22-048BC100		5									
22NA21-22-054		2							R	5300-C00-1402	G190
22NA21Q-22-048		52									
22NA21Q-22-054		2							R	5300-C00-1403	G190
22NA21Q22-054		2									
22NA217-22-02	33	20									
22NA217-22-62		16							R	5300-C00-1478	G190
22NA24-02	88	3							R	5310-596-8706	G190
22NA24-02BC	74	1									
22NA35-02	88	8									
22NA35-02BC	74	5									
22NA38-02	74	15									
	88										
22NA401-02	33	102									
22NA41-02		17									
22NA47-02		8									
22NA5-02	33	38							R	5310-274-3266	G190
	39										
	43										
	71										
	88										
22NA5-02BC		2									
22NA5-048	18	5							R	5310-275-4307	G190
	33										
22NA5A-054	42	2									
22NG4-02-J10	33	1									
22NG41-02	39	42									
22NG41-02J10	33	1									
22NG41-048		6		M		O					
22NKA3B-02		2							R	5310-839-1936	G190
22N217-22-02		20									
22W421-22-048		32									
2209-10		3		P1							
2209-11		1							R	5935-187-4295	D336
2209-6		1							R	5935-187-1615	D336
2209-7		1		P1					R	5935-142-4880	D336
2209-8		1									
2209-9		1		P1					R	5935-196-1432	D336
2220		1									
222487		1									
223	PG. 1012	1							R	4930-563-2381	SCVA
224		1									
224725		1									
225G0105-1-0	124 - 66	1									
	238 - 3										
225R0100	238 - 3	1									
225R0100-1-0	124 - 66	1		P1					R	1650	
225000-1	352	1		P1	F	O	C		R	1660-614-1736	Y120
	352A- 41										
225000-2	352 - 22	1							R	1660-570-2362	Y120
	352A- 36	1									
226AC-3/16		11									
227-2598		2									
227-2791		1									
227-2804		2									
227-3591		6									
23-2064		1									
230-20370	355	1							R	2915-305-9048	M140
	PG. 1018										
	PG. 1027										
233T100-301	178 - 18	4		P1	F	O	R		R	1680-305-4205	X110
233T100-501	178 - 15	4		P1	F	O	R		R	1680-305-4206	X110
2352-02		2									
2371-10-02		1									
24082-02	219 -129	1		P1	F	O	R		R	6680-565-3883	VTIL
	221 - 25										
	270										
24082-03	219	1							R	6615-575-9345	VTJB
	221										
	271 - 12										
24222-03	219 -129	1		P1	F	O	R		R	6615-601-0278	VTKB
	221 - 25										
	270										
	271 - 12										
244-14010- 3	14 -281	1		M		O					
244-14010- 4	14	1		M		O					
244-16C	334	3									
244-31210	43 - 55	1		M		O					
244-31224	39 - 94	1									
244-31224- 3	39 - 97	1									
244-31224- 5	39										
244-48310	117 - 46	1									
244-48310- 3		2		P1	F	O	C		R	1560-621-2960	ANAA
	117 - 46	2									
244-48311	117 - 49	2		P	F	O	C		R	1560-621-2962	ANAA
244-48312		2		P1	F	O	C		R	1560-621-2961	ANAA
244-48313	117 - 47	2		M		O					
244-51013	219	1		M		O					
	275										
244-51014	219	1		A		O					
244-51015	221 - 38	1		M		O					
244-51016	221 - 27	1		A		F					
	224 - 20										
244-51017	221 - 41	1		M		O					
244-52026	175	1		P1	F	O	C		R	1560-626-3333	ANAA
244-52026- 3	175 - 72	1		M		O					
244-52027	175 - 71	2									
	176 - 2										
244-52027- 3	175 - 78	1									
244-52027- 11	175	1									
244-52712	80 - 22	1		M		O					
244-52713	80	1		M		O					

Part Number	Figure and Index	Total Qty.	Micro-Film Number	Maintenance Code Data: Source Code	Inst'l Capability	Pre-Inst'l Capability	Recoverability	Support Equipment	Federal Stock Number Data: Cognizance Code	Federal Stock Number	Mfg. Code (TSMC)
244-52714	80 - 24	1		M		O					
244-52715	80 - 23	1		M		O					
244-52716	80 - 25	1		M		O					
244-53010	58 -136	2		M		O					
244-53011	58 -139	1		M		O					
244-54010	251 - 13	1		A		F					
	312										
244-54011	311 - 35	1		M		O					
	312 - 3										
244-54011- 3		1		M		O					
244-54012	234 - 38	2		M		O					
	235 - 38										
244-54016	241 - 49	2									
244-54019	221 - 26	1									
244-54020		1		M		O					
244-54025	282 - 7	1									
244-54026	303	1									
	319 - 34										
244-54029	284A	1									
244-54029- 3	284A- 1	1									
244-54030	284A	1									
244-54030- 3	284A- 29	1									
244-54031	284A- 30	1									
244-54032	284A	1									
244-54036	287A- 9	1									
244-54036- 3	285A- 74	1									
244-54037	285A- 73	1									
	287A- 10										
244-54038- 3	287A- 63	1									
244-54041	334 - 86	1									
244-54043	285A- 7	1									
244-54044	285A- 8	1									
244-54044- 9	285A- 9	1									
244-54050	334 -228	1									
244-54056	286A- 1	1									
244-54057	286A	1									
244-54061- 3	319 - 25	1									
244-54061- 5	319 - 15	1									
244-54063	269	1									
244-54066	285	1									
	285A- 1										
	334 -191										
244-54066- 11	285A	1									
244-54067	285A- 30	1									
	334										
244-54068	287	1									
	287A										
	335										
244-54073	285A	1									
244-54074	285A	1									
244-54075	334 - 85	1									
244-54078- 3	287A- 60	1									
244-54078- 5	287A- 61	1									
244-54078- 7	287A- 62	1									
244-54079	285A- 61	1									
244-54081	287A- 57	1									
244-54082	39 - 96	1									
244-54093	287A- 39	2									
244-54105	241	1		A		F					
	241 - 38	1									
244-54107	241 - 54	1									
244-54108	241 - 61	1									
244-541081- 11	241 - 47	2									
	241 - 64	2									
244-54109	298 - 42	5									
244-54110	221 - 14	1		M		O					
244-54111	221	1		M		O					
244-54305	269 - 18	1									
	269A	1									
244-54306	269A- 33	1									
244-54306- 17	269A- 40	1									
244-54306- 21	269A- 34	1									
244-54307	269A- 43	1									
244-54309	269 - 15	1									
244-54310	269A- 44	1									
244-54311	343 - 5	1									
	345A- 5										
244-54311- 11	347 - 6										
244-54311- 22	343 - 5	1									
	345A										
244-54315	269 - 12	1									
244-54316	269 - 14	1									
244-58628	154 - 77	1									
244-59101	321	1		X1							
244-59102	321	1		X1							
244-59103	321 - 35	1		P1	F	O	C		R	1650-600-3785	ANAA
244-59104	49 -124	1		M		O					
244-59601	321 - 37	1		P1	F	O	C		R	1650-600-3813	ANAA
244-63202-101	284A	1									
244-63210	334 - 32	1									
244-63210- 3	334	1									
244-63219	334	1									
244-63219- 11	334 -205	1									
244-63221	334 -206	1									
244-63222	334	1									
244-63222- 11	334 -209	1									
244-63222- 19	334	1									
244-63222- 21	334 -210	1									
244-63225	334 -200	1									
244-63227	334 -144	1									
244-63227- 3	334	1									
244-63229	334	1									
244-63229- 3	334 -201	1									
244-63230	334 - 33	1									
244-63230- 3	334 - 34	1									

Part Number	Figure and Index	Total Qty.	Micro-Film Number	Maintenance Code Data: Source Code	Inst'l Capability	Pre-Inst'l Capability	Recoverability	Support Equipment	Federal Stock Number Data: Cognizance Code	Federal Stock Number	Mfg. Code (TSMC)
244-63231	334 - 37	1									
244-63232	334 - 26	1									
244-63232- 3	334	1									
244-63233- 1	334 - 24	1									
244-63233- 2	334 - 25	1									
244-63235	334 -142	1									
244-63237	334 - 40	1									
244-63244	334	1									
244-63245- 1	334 -108	1									
244-63245- 3	334	1									
244-63245- 5	334	1									
244-63245- 11	334 -109	1									
244-63256- 91	334 -231	1									
244-63256-201	334 -228	1									
244-63311	337 - 56	2									
244-68010	347 - 29	2									
	348 - 43										
244-68010- 3	348 - 43	2		P1	F	O	C		R	1440-620-4123	B210
244-68011	347 - 27	4		M		F					
	348 - 41										
244-68210	347	3									
	348 - 22										
	348 - 40										
244-68211- 1	347	1									
	348 - 35										
244-68211- 2	347	1									
	348 - 36										
244-68212- 1	343 - 14	1									
	345A- 14										
	347 - 32										
244-68212- 2	343	1									
	345A										
	347										
244-68213- 1	343 - 17	1									
	345A- 17										
244-68213- 2	343	1									
	345A										
244-68214- 1	343	1									
	345A										
	347										
244-68214- 2	343 - 24	1									
	345A- 24										
	347 - 44										
244-68215- 1	343	1									
	345A										
	347										
244-68215- 2	343 - 25	1									
	345A- 25										
	347 - 45										
244-68216- 1	343	1									
	345A										
	347										
244-68216- 2	343 - 26	1									
	345A- 26										
	347 - 46										
244-68217- 3	345A	2									
244-68217- 5	343	4									
	345A										
244-71010	269	1									
	348 - 44										
244-71010- 11	348	1									
244-71010- 21	269	1									
244-954001	305 - 5	1									
	306 - 8										
244-954026	282 - 8	1									
244-954027	282 - 12	1									
244-954029	284A- 15	1									
244-954029- 3	284A- 16	1									
244-954030	284A	1									
244-954030- 3	284A- 21	1									
2452-02	63 - 29	2							R	5340-290-4478	G192
25-1000	105 - 33										
	105 - 47										
	104 - 24	1									
	104 - 38	1									
25-2529Z	170 - 7	1							R	1650-511-2025	Y120
25-7200		1							R	1650-572-6993	Y120
25-9100		2									
25A5-02	91	27									
250A/ARN		1									
2500	165 - 78	4							R	5930-538-1911	D444
									R	5930-548-9491	H558
										OR	
25017		1									
25017-10		15									
25017-15		5									
25017-20		2									
25017-25		2									
25017-35		2									
25017-5		9									
25036									R	1560-092-3283	AHLR
										OR	
	123 - 67	1							R	1650-516-4818	YAPC
	134 - 37										
	278 - 6										
	294 - 12										
2504	123	1									
2508	123 - 93	4									
2509	123 - 90	2									
2511	123 - 91	4									
2512	123 - 92	2									
25101-B16A-B1		1									
25101-B16A-1-B1	248 - 3	1							R	6680-663-8881	V170
	315 - 43										
	318 - 35										

PART NUMBER	FIGURE AND INDEX	TOTAL QTY.	MICRO-FILM NUMBER	MAINTENANCE CODE DATA: SOURCE CODE	INST'L CAPABILITY	PRE-INST'L CAPABILITY	RECOVERABILITY	SUPPORT EQUIPMENT	COGNIZANCE CODE	FEDERAL STOCK NUMBER DATA: FEDERAL STOCK NUMBER	MFG. CODE (TSMC)
25101-B16A1-B1	315 - 49	1									
252-3300	222 - 12	2							R	1005-587-9207	B210
252-3300-0	331 - 30	2									
252-3300-1	222	2							R	1005-587-9248	B210
	331										
252-3300-4		2									
252-3300-5		2									
2520-048		2									
2528-06-00		1							R	5940-577-0035	D446
25601A37C7A1		1									
25602-A37C-7-A1	255 - 2	1							R	6685-515-4723	VIHM
	315 - 46										
	318 - 41										
25602A37C7A1		1							R	6685-515-4723	VIHM
259A-4TT	350 - 28	1		P1	F	O	S		R	4820	
26-20-55K		1							R	5935-500-5463	D336
26C-02	195 - 18	2									
	195 - 24										
	195 - 29										
2600-02	17	75							R	5310-275-4346	G1AN
2600-02BC100		1									
2600-046	FG. 1015	17							R	5310-275-4348	G1AN
2600-048BC		2									
2600-054BC		2							R	5310-530-9120	G190
2600-064		10							R	5310-208-4187	G1AN
2600-070		2									
2600-2		2									
2600-4									R	5325-449-3023	GH80
										OR	
									R	5940-636-6513	E111
										OR	
	334	2									
		1		M		O			R	5310-521-4069	G190
2610-S-02	357	1									
2610-02		2									
2610-048	16 - 84	20									
2610-064		60							R	5310-639-1991	G190
2610L02		44									
2610L82		4									
2620-02	10	110							R	5300-C00-1301	G190
	35										
	39										
	74										
	76										
2620-048		2									
2620-054	16	18							R	5310-559-0482	G190
2620-064	17	6									
2620-2	35	2									
		1									
2620-82		2							R	5300-C00-1407	G190
2620002		6							R	5310-559-0321	G190
26275	150 - 3	1		P1					R	4820-094-8203	YAPC
	150 - 9										
	170 - 3										
	218 - 18										
	259 -273										
2648-064		8		P1	F	O	C		R	5310-596-8113	G190
2648-070	24	6									
26710-6	141 - 3	2							R	1650-217-3062	Y120
	164 - 69										
	164 -121										
	165 - 39										
26710-8	136 - 40	1							R	1650-217-3063	Y120
	137 - 42										
26800-A65A-1-A2	318 - 22	1									
26800-A65A1-A2		1									
26800-A65A1-A3	273	1							R	6685-626-3455	Y120
27J104	164 - 89	2									
	165 - 82										
27J105	164 - 90	2									
	165 - 83										
27J106	164 - 92	1									
	165 - 85										
27J111	164 - 88	2									
	165 - 81										
27J112	164 - 87	1									
	165 - 80										
27005-02		30									
2701-02		1									
270577		2							R	6340-341-4294	D444
270977	242 - 9	2		P1					R	6340-506-1940	D444
271-0011		4									
2710-02	74	8									
2710-048		2									
2710-054		2									
2710-82		4									
2720-02	88	21		P1					R	5310-638-9416	G190
2720-048		5							R	5310-638-9422	G190
2720-054	78	2									
2720-054BC100		2									
2720-064		32									
27370		1									
27370-1	321 - 49	1									
275-4		4									
27600	124 - 54	3		P1					R	6105-221-1330	D334
	126 - 66										
	127 - 89										
	152 - 28										
									R	1650-305-4425	Y120
										OR	
277-0335		2									
277-0428		2									
277-0430		1									
277-0433		2									
27700	153 - 9	1							R	1680-508-2882	X110

PART NUMBER	FIGURE AND INDEX	TOTAL QTY.	MICRO-FILM NUMBER	MAINTENANCE CODE DATA: SOURCE CODE	INST'L CAPABILITY	PRE-INST'L CAPABILITY	RECOVERABILITY	SUPPORT EQUIPMENT	COGNIZANCE CODE	FEDERAL STOCK NUMBER DATA: FEDERAL STOCK NUMBER	MFG. CODE (TSMC)
	154 - 8										
2772	10	1		P1	F	O	S		R	2915-303-8631	Y120
	100										
	109 - 1										
									R	2915-291-0890	Y120
										OR	
2782	109 - 11	1		P1	F	O	S		R	2910-441-3096	ZCMA
									R	2915-303-8632	Y120
										OR	
27830		2							R	1650-516-3455	YAPC
28-2-G	334	1									
28-3-N	334	1									
28A17-048		1									
28025-D	169	1									
281-1A		4									
281-3A		4									
281-45	331 - 35	4									
28565	215 - 13	1		P1	F	O	C		R	5950-575-9352	D396
	216 - 13										
28634-D	169 - 2	1									
2867-A18		1									
2867-B1	353 - 19	1							R	6680-033-4778	YECP
2867-7B-C1	352	1		P1					R	6680-515-5894	YECP
28720-6		1							R	1650-288-6908	Y120
28730		1									
29-51054-3		1									
29F-476	285A- 78	1									
29F476	284 - 50	1									
	285 - 97										
	287 - 43										
	287A- 54										
290-540130	285A- 78	1									
293-0489055	269 - 24	1									
294189-B-12	269 - 13	1									
294189-68	287A- 35	1									
294189C-18	285A- 25	1									
294189C-22	285A- 24	1									
295018	44	2		M		O					
29502-C-22	285 - 32	1									
295134-14C		1									
295134-16A		1									
295134-20A		2									
295134-26A	350	1		M		O			R	5300-C04-4088	GB90
295134-8A		25									
295134-8B		8									
295202-B-18		1									
295202-C-22		1									
295202-GA		1									
295202-10A	303 - 48	1									
295202-10B		1							R	5325-275-7552	GB90
295202-10C		2									
295202-10H		2									
295202-12		3									
295202-12A		4							R	5325-275-7534	GB90
295202-12B		3							R	5325-275-7538	GB90
295202-14		3									
295202-14A	303 - 49	1									
295202-14B		23							R	5325-275-7539	GB90
295202-16A		7									
295202-16C		3							R	5300-C04-4079	GB90
295202-18A	303 - 50	1									
295202-18B		3									
295202-20A	228 - 10	2		P1					R	5325-275-7518	GB90
	304 - 61										
295202-20B	308 - 32	9							R	5325-531-1584	GB90
	309 - 30										
295202-20C		2									
295202-22A	304 - 62	1									
295202-22B		2									
295202-24A	303 - 51	1									
295202-24B		5									
295202-28A		1							R	5325-174-2871	GB90
295202-28B		9									
295202-28C		1									
295202-32C		1									
295202-40C	113 - 4	2									
295202-44A		2		M		O					
295202-46C	113 - 3	2									
295202-6B	287 - 49	8							R	5325-641-2651	GG90
	357										
295202-6C		4									
295202-8	261 - 19	1									
295202-8A	311 - 31	46							R	5325-275-7519	GB90
295202-8B		8							R	5325-275-7535	GB90
295202-8C		6							R	5325-275-7506	GB90
295246-10		1									
295246-10A		1									
295246-10C		1									
295246-12		2									
295246-12A		1									
295246-16A	63 - 11	1							R	5325-275-7556	GB90
295246-24A		1									
295246-44C	113 - 2	2							R	5325-603-4146	BB90
298064146	213 - 56	1									
299-54856- 1		1									
299AABB		1									
3/8-24X3/4		4									
3-254-1	96 - 52	1		P1	F	O	R		R	2615-305-4523	Y120
	102 -156										
	236 - 7										
	237 - 5										
3-254-91	96 - 53	1							R	2915-594-1751	Y120
	102 -156										
	103 - 59										
3-55849-3	353	1		P1					R	1680-698-2683	X110

PART NUMBER	FIGURE AND INDEX	TOTAL QTY.	MICRO-FILM NUMBER	MAINTENANCE CODE DATA: SOURCE CODE	INST'L CAPABILITY	PRE-INST'L CAPABILITY	RECOVERABILITY	SUPPORT EQUIPMENT	FEDERAL STOCK NUMBER DATA: COGNIZANCE CODE	FEDERAL STOCK NUMBER	MFG. CODE (TSMC)
	PG. 1021										
3-55849-5	355	1		P1					R	1680-698-2684	X110
	PG. 1021										
3F2-4		1		M		O					
	351	1									
3F5170-3	44 - 77	2		M		O			R	5325-286-5580	GH80
3G4-3	357	15		P	F	O	C				
3G4-5		4		P1	F	O	C				
3H2-10-12	223 - 15	1		M		F					
3H2-10-17	223 - 6	2		M		F					
3H2-10-9	223 - 21	1		M		F					
3H2-12-15	352 - 40	1		M		F					
	353 - 20										
3H2-16-21		2									
3H2-16-31	119 - 48	2		M		F					
3H2-8-15	119 - 51	2		M		F					
3H2-8-33	119 - 45	2		M		F					
3H2L-6-16		4		M		F					
3H2L4-9	219 - 35	2									
3H2L6-16	331 - 34	4									
3H2L6-25	331	4		M		F					
3H3-4-0094	143 - 68	1		M		O					
	144										
3H3-4-0100		2									
3H3-4-0120	143	1		M		O					
	144 - 26										
3H3-4-0130	142 - 55	2		M		O					
	150 - 44										
3H3-4-0134		1									
3H3-4-0135	123 -164	1									
3H3-4-0140	141 - 94	4									
3H3-4-0145	123 -163	1									
3H3-4-0152	144 - 35	1		M		O					
3H3-4-0160		1									
3H3-4-0164	141 -105	1		M		O					
	142 - 50										
3H3-4-0170	142 - 50	1		M		O					
3H3-4-0175	143 - 78	1		M		O					
3H3-4-0212		1									
3H3-4-0224	122 - 95	2									
	122 - 96										
3H3-4-0234		1									
3H3-4-0240	122 - 49	2									
	125 - 59	1									
3H3-4-0253		1									
3H3-4-0256		1									
3H3-4-0324	122 - 48	1									
	123 -106										
	125 - 58	1									
	358										
3H3-4-0334		2									
3H3-4-0402		1									
3H3-6-0190	129	1									
3H3C-4-0114		2		M		F					
3H3C4-0114	164	1									
3H3C4-0154	164	1									
3H3C4-0176	129	1									
3H3C4-0184	164	1									
3H3C6-0140		1									
	125	1									
3H3C6-0190		1									
	125	1									
3H3C6-0220		1									
	125	1									
3H3C6-0274		1									
	125	1									
3NBC511YJ	30 - 54	2							R	3110-277-0759	G730
3NBC511ZP		2									
3S10-5	204 - 17	2		P1	F	O	C		R	5330-919-3010	ANAA
3S11-3	195	3		P1					R	1500-C00-2298	ANAA
	200 - 8										
	203 - 22										
3S9	234	1									
	235										
3T3-2-2		1									
3T3-2-4		1									
3T3-2-5		1									
3T3-2-6		1									
30-007		1							R	2915-202-8714	YH0A
30-037	107 - 9	1							R	2915-202-6123	YH0A
	288 - 10										
	291 - 9										
30E8-6C		1									
30E12-6C	PG. 1021	1									
30E13-6		1									
30E13-6A		1									
30E13-6B	279 - 19	1							R	2925-305-4665	N140
	355 - 99										
30E13-6C	279 - 19	1							R	2925-528-5530	NECP
	355 - 99										
	355 -100										
	PG. 1021										
30E13-6D	279 - 19	1									
	355 -100										
	355 -101										
	PG. 1021										
30E13-6D-F	355 -101	1									
	PG. 1021										
30E13-6DF	279 - 19	1									
300-A	285	17							N	5920-571-7037	
	285A- 2										
	287										
	287A- 8										
300-A-MTG	285A- 32										
	286A- 7										

PART NUMBER	FIGURE AND INDEX	TOTAL QTY.	MICRO-FILM NUMBER	MAINTENANCE CODE DATA: SOURCE CODE	INST'L CAPABILITY	PRE-INST'L CAPABILITY	RECOVERABILITY	SUPPORT EQUIPMENT	FEDERAL STOCK NUMBER DATA: COGNIZANCE CODE	FEDERAL STOCK NUMBER	MFG. CODE (TSMC)
300A-MTG	269A- 45	26									
30022-2	169 - 2	1							R	1650-242-9426	Y120
30023-2	169	1									
3005-S4-12D	124 - 1	1									
	126 - 1										
	127 - 1										
	136 - 29										
3005-S4-16D	137 - 31	1									
3005-S4-5D	127 - 18	1									
3005-S4-6D	124 - 2	7									
	126 - 8										
	126 - 18										
	126 - 57										
	127 - 8										
	127 - 60										
	136 - 30										
	137 - 32										
3005-S4-8D	136 - 31	3									
	136 - 57										
	137 - 33										
	137 - 65										
3005-S4-8D		2									
30102		2									
302015	16	6									
303	233	1							R	3110-144-8788	G730
									R	5985-370-8426	X110
										OR	
									R	5136-240-3050	S231
										OR	
									R	5940-285-3044	GH80
										OR	
									R	5940-159-0251	D336
										OR	
30491	221 - 30	1		X2							
3055-S11-12D	124 -122	6							R	4730-033-4550	G250
	124 -122										
	126 - 86										
	127 -112										
	136 - 68										
	137 - 75										
3055-S11-6D	124 -121	1							R	4730-033-4546	G250
	126 - 88										
	127 -114										
3055-S11-8D	136 - 67	1							R	4730-033-4548	G250
	137 - 74										
3055-11-8D		1									
306167		1									
306172		1							R	1630-571-6212	X110
306194	188 - 88	1		P1					R	1680-511-0524	X110
30690		1									
31-A-133	321	4									
3105-1	PG. 1004	7									
311826-1	138 - 90	3		P1					R	4820-032-7964	Y120
	139 - 33										
	139 - 43										
312001	209 - 41	26							R	5920-428-5725	D336
	210 - 37										
	211 - 11										
	213 - 13										
	214 - 13										
	214 - 15										
	215										
	216										
	221										
	228 - 24										
	233A	1									
	233A	1									
	264 - 6	1									
	264 - 7	1									
	264 - 8	1									
	264 - 9	1									
	303 - 47	1									
	314 - 33										
	319 - 27										
	319 - 28										
	319 - 29										
	319 - 30										
	319 - 31										
	319 - 32										
	319 - 33										
	319 - 35										
	319 - 36										
	319 - 37										
	319 - 38										
	319 - 40										
	319 - 41										
	319 - 44										
	319 - 45										
312002	209	2							R	5920-189-0848	D336
	210										
	211										
	213 - 14										
	214 - 14										
	215										
	216										
	227										
	248										
	258										
312003	215	5							R	5920-010-6652	D336
	216										
	226 - 1										
	283										
	286 - 5										
	303 - 38										
	303 - 39										

PART NUMBER	FIGURE AND INDEX	TOTAL QTY.	MICRO-FILM NUMBER	MAINTENANCE CODE DATA: SOURCE CODE	INSTL CAPABILITY	PRE-INSTL CAPABILITY	RECOVERABILITY	SUPPORT EQUIPMENT	FEDERAL STOCK NUMBER DATA: COGNIZANCE CODE	FEDERAL STOCK NUMBER	MFG. CODE (TSMC)
	304 - 55										
	304 - 56										
	314 - 49										
312004	213	2							R	5920-501-1076	D336
	214										
	216										
	251										
	319										
312005	122 - 15	1									
	211	5									
	212 - 13										
	213 - 41										
	214 - 11										
	214 - 12										
	215										
	216										
	303 - 34										
	303 - 42										
	303 - 43										
	303 - 44										
312015		2									
312106		2							R	4820-032-7968	Y120
312106-1	163 - 23	1							R	1630-590-0892	Y120
3122-8-59		1							R	4730-278-0415	GH80
312520		1		M		O					
313	241	1							R	6105-390-9829	D444
313001	215	4							R	5920-131-9816	D336
	304 - 57										
	304 - 58										
	304 - 60										
	314 - 35										
	314 - 36										
	314 - 43										
	314 - 45										
314001		9									
314015	215	2							R	5305-527-4574	WSPE
	216										
	303 - 36										
	303 - 37										
	303 - 41										
	304 - 46										
	304 - 47										
	304 - 48										
31475-101		1		M		O					
31494- 3		1		M		O					
3154-11		1									
31586-2	174 - 60	1							R	1680-562-8269	XA1R
	174 - 89										
	270 - 78										
31716- 7		1		M		O					
31882		2									
31888		50									
31889		280									
31892		1									
31898		72									
31899		123									
31902		25									
31904		2									
32-A-114		1									
32-B-1130		1									
32-R-1600-1-0	217 - 5	1							R	1650-338-1058	YCNL
	321 - 59										
32-1953-000		1									
32A114		1							R	1650-474-1842	YCNL
32A880		1							R	5977-232-5263	YCNL
32NAB2044		2									
32P-101-1	99 - 10	2		P1	F	O	S		R	2915-532-7409	Y120
	100 - 26										
	101 - 6										
	102 - 7										
	103 -159										
32P1600-1-0		1		P					R	1650-338-1058	YCNL
320-.625-2.125S		1							R	4730-278-2533	GH80
320-.625-2.250S		2							R	4730-203-8182	GH80
320-.625-2.250SH		2									
320-.625-2.312S11		4									
320-0.625-2.312SH	71 - 63	2							R	4730-203-9126	GH80
320-0.625-2.375S	71 - 74	4							R	5300-C01-2105	GH80
320-625-175S		1									
320-625-181SH	92	1									
320-625-750SH		1							R	4730-202-8757	GH80
320-63-225SH	351	1							R	4730-516-3047	GH80
320-63-231SH		4									
320-63-237SH		4									
320-63-750-S		1									
320-63-750-SH	355	2									
320-63-750SH	PG. 1019	1									
320-87-194-SH		1									
320-87-206-SH		1									
320-87-206SH		1									
321452-048		5									
321452-054		2									
321452-070		6									
321452-126		2									
325-62-444SH	124 - 31	4							R	4730-274-4911	GH80
	126 - 31										
	127 - 31										
325-62-475SH		1									
325-62-606SH	124 - 11	4							R	4730-200-0326	GH80
	126 - 7										
	127 - 7										
325-63-415SH	150	2									
3250-1	PG. 1004	6									
32542		19		P1							
32543		1									

PART NUMBER	FIGURE AND INDEX	TOTAL QTY.	MICRO-FILM NUMBER	MAINTENANCE CODE DATA: SOURCE CODE	INSTL CAPABILITY	PRE-INSTL CAPABILITY	RECOVERABILITY	SUPPORT EQUIPMENT	FEDERAL STOCK NUMBER DATA: COGNIZANCE CODE	FEDERAL STOCK NUMBER	MFG. CODE (TSMC)
326-.750-5.6875SH	322	2							R	4730-595-3891	GH80
327		1							R	2810-293-5514	PPWA
3279	353 - 2	1							R	1650-373-8080	Y120
									R	6105-091-7280	W180
										OR	
33KDD3	189 - 84	1									
	189 - 86	1		M		O					
3300		2									
3300-2									R	1650-340-2058	Y120
										OR	
		2		P1					R	2920-090-7722	MGLA
	116 - 14	4		P1	M	O	R		R	2915-569-4891	Y120
33090	270	1									
334	256	4									
	315										
	318										
	318	4									
340	PG. 1003	1									
3409	353 - 2	1							R	5940-258-5191	D446
342001	214	43							R	5920-156-4474	D336
	228										
	303										
	304										
	314 - 55										
	314 - 56										
	319										
342001-SA1	214 - 6	1									
	303 - 27										
	304 - 36										
	314 - 58										
	319 - 48										
342001-SA2	214 - 5	1									
	303 - 26										
	304 - 35										
	314 - 57										
	319 - 47										
342006	269A	6									
	284										
	285 - 2										
	285 - 36										
	287 - 1										
342006-SA1	269A- 10	1									
342006-SA2	269A- 8	1									
	284 - 32										
34306		1		P1					R	5940-204-6195	D336
35A504		1									
35A506	186 - 75	1		P1	F	O	R		R	6105-324-7408	D444
	277 - 7										
3508		1									
3509	234 - 27	1									
	235 - 27										
35203		2									
3585-2CNX-.246	97	1									
359		1									
3591-3CNX.285	20 - 22	2									
3591-3CNX-.285	94	6							R	5340-584-1858	G192
	171 - 43										
	171 - 79										
	171 - 94										
3591-3CNX-.38	100	9									
	101										
3591-4CNX-.500	97	4									
3591-4CNX-1/2	99	8									
	100	8									
	101										
3591-4CNX-1/4	20 - 31	6									
	20 - 33										
3591-4CNX-3/8	20 - 23	3									
	87 - 15										
3591-4CNX3/8	20 - 31	6									
	20 - 33										
3591-5CNX-15/32	21 - 87	4									
	21 -108										
3591-6CNX-9/16	340 - 40	4									
3600-02	3	1570							R	5310-639-1930	G190
	5										
	9										
	10										
	12										
	16 - 31										
	18										
	33										
	37										
	39										
	43										
	74										
	76										
	87	1									
	122										
	332	1									
	332 - 17	1									
3600-02BC		14									
3600-048	6	1694		M		O			R	5310-527-4067	G190
	39										
	53 - 14										
	71										
	76										
	78										
	80										
3600-048BC		591									
3600-054	43	580							R	5310-558-3528	G190
3600-062		1									
3600-064		54							P	5300-C00-1321	G190
3600-2-02	33	1085		M		O			R	5310-639-1930	G190
	35										

PART NUMBER	FIGURE AND INDEX	TOTAL QTY.	MICRO-FILM NUMBER	MAINTENANCE CODE DATA: SOURCE CODE	INSTL CAPABILITY	PRE-INSTL CAPABILITY	RECOVERABILITY	SUPPORT EQUIPMENT	FEDERAL STOCK NUMBER DATA: COGNIZANCE CODE	FEDERAL STOCK NUMBER	MFG. CODE (TSMC)
	39										
	41										
	50										
	71										
	74 - 12										
	74 - 14										
	76										
	78										
	86 - 69										
3600-2-028C100	71	47							R	5310-639-1952	G190
	74 - 11										
	86										
3600-2-048	33	200									
	39										
3600-2-048BC100	93	3									
3600-2-82	33	288		M		O					
3600-82	2	123							R	5310-527-4068	G190
	9										
	44										
	48										
36000	210	1									
	1	1		P1					R	5935-535-8148	E121
3601-15	334 - 58	1									
3601-16D-9	116 - 3	4									
3601-20D-1	96	5									
	98										
	99										
	100										
	101 - 61										
	102 -138										
	103 -113										
3601-20D-3	95 -171	2									
3601-20D-9	96	4									
	97 -173										
	97 -185										
	98										
	99										
	100 - 91										
	101 - 62										
	102 -136										
	103 -111										
	111 - 23										
3601-24D-1	97	1									
3601-24D-9	93	2									
	94										
	95 -155										
	95 -168										
	97 -156										
	97 -170										
3601-28D		2									
3601-28D-9	112 - 51	4									
3601-3	334 - 57	1									
3601-32-9		2									
3601-32-9D	101 - 98	2									
	103 - 94										
3601-32D-1	95	1									
	97										
3601-32D-15		1									
3601-32D-9	95 -143	2									
	96										
	97 -145										
	100 - 94										
	100 -133										
	101 - 45										
	102 - 22										
	102 - 73										
	103 -177										
	121 - 11										
	121 - 37										
3601-40D-1	95	1									
	97										
3601-40D-9	95 -108	4									
	95 -116										
	95 -123										
	97 -110										
	97 -118										
	97 -125										
3601-9	334 - 59	1									
	349 - 60	2									
3604-32C	97 - 47	1									
3605-20D	96 - 9	1							R	4730-303-6103	G260
	98 - 18										
	99 - 30										
	100 - 45										
	101										
	102										
	103										
3605-20D-1	96	1									
3605-20D-24	96	2									
	98										
	99										
	100										
	101 - 63										
	102 -137										
	103 -112										
3605-20D-3	95 -170	2									
	97 -172										
	97 -184										
	98										
	99										
	100 - 90										
	101 - 64										
	102 -135										
	103 -110										
	111 - 22										

PART NUMBER	FIGURE AND INDEX	TOTAL QTY.	MICRO-FILM NUMBER	MAINTENANCE CODE DATA: SOURCE CODE	INSTL CAPABILITY	PRE-INSTL CAPABILITY	RECOVERABILITY	SUPPORT EQUIPMENT	FEDERAL STOCK NUMBER DATA: COGNIZANCE CODE	FEDERAL STOCK NUMBER	MFG. CODE (TSMC)
3605-24D	97	1							R	2915-311-1156	G250
3605-24D-24	97	2									
3605-24D-3	95 -154	1									
	95 -167										
	97 -155										
	97 -169										
3605-24D-9	95	2									
3605-28D-3	112 - 50	2									
3605-3	349 - 59	2									
3605-3-20D		2									
3605-3-32D		1									
3605-3-32D		1									
3605-32-24		2									
3605-32-3		1									
3605-32D	95 - 50	1							R	4730-303-6104	G260
3605-32D-24	95 -144	2									
	97 -146										
3605-32D-3	95 -141	1									
	97 -143										
	100 - 93										
	101 - 44										
	102 - 21										
	103 -176										
3605-40D	95 - 48	2							R	4730-303-6105	G260
	97 - 45										
3605-40D-24	95	2									
	97										
3605-40D-3	95 -107	2									
	95 -115										
	95 -122										
	97 -109										
	97 -117										
	97 -124										
3610-02	3	176							R	5310-639-6944	G190
	9										
	10										
	16 - 30										
	33										
	35										
	39										
	42										
	53 - 6										
	87										
	88										
	332 - 16	1									
3610-048	10	553							R	5310	
	88										
3610-054		284									
3610-064		78									
3610-2-02		8							R	5120-323-2152	D336
3610-62		4							R	5310-591-1312	G190
3610-82		4									
36100-02		17									
365-.625-5.375SH		2									
365-.625-5.500S	322	2							R	4730-293-7137	GH80
365-1032		2									
365-428		1									
365-63-500SH	350	1							R	4730-516-3045	GH80
365-63-537SH	321	2									
3651-20D-15	111 - 12	1									
3651-20D-3	111 - 11	1									
3651-20D-9	111 - 14	1									
3651-20D15		1									
3651-20D3		1									
3651-20D9		1									
3651-28D		4									
3651-32D	334	1									
3655-16D	116 - 2	2							R	4730-591-3692	G250
3655-20D	95	8							R	2915-311-1162	G250
	97										
	98 - 20										
	99 - 29										
	100 - 47										
	101 - 17										
	103 - 7										
	111										
	358										
3655-24D	93 - 59	16							R	4730-305-2962	G260
	93 - 62										
	94 - 58										
	94 - 62										
	94 - 77										
	95 - 38										
	95 - 75										
	97 - 33										
	97 - 77										
	349 - 58	2									
	358										
3655-28D	112	2							R	4730-569-4832	G260
3655-32D	96 - 5	1							R	2915-311-1164	G260
	100										
	101 - 32										
	102										
	103 - 5										
	121 - 36										
3655-40D	95	4							R	4730-305-2963	G260
	97										
	358										
368									R	8030-433-4111 OR	G600
									R	4720-516-3691	A120
3691-3CNX-.285	100	6									
36964		40							R	5940-502-1785	D336
3700-02		4									
3700-2-02	74	4							R	5310-639-1935	G190

PART NUMBER	FIGURE AND INDEX	TOTAL QTY.	MICRO-FILM NUMBER	MAINTENANCE CODE DATA: SOURCE CODE	INSTL CAPABILITY	PRE-INSTL CAPABILITY	RECOVERABILITY	SUPPORT EQUIPMENT	COGNIZANCE CODE	FEDERAL STOCK NUMBER DATA: FEDERAL STOCK NUMBER	MFG. CODE (TSMC)
3700-2-048	76	10		M		0			R	5300-C00-1306	G190
3700-2-82		2									
3700S2-02		16									
3710-82		4							R	5310-638-9409	G190
37152	110 - 2	3		P1					R	2915-098-3537	Y120
	112 - 27										
									R	4820-532-7559 OR	Y120
3716	96 - 29	1									
37161	93 - 19	6		P1	F	0	S		R	2915-098-3536	Y120
	94 - 13										
	95 - 18										
	95 -150										
	97 - 13										
	97 -148										
	110 - 19										
37181	93	5		P1	F	0	C		R	6645-144-4782	WHNW
	94										
	95										
	97										
									R	2915-098-3535 OR	Y120
									R	2915-532-7560 OR	Y120
37181-1	96 - 38	1		P1	F	0	C				
	98										
	100										
	102 -131										
	109 -107										
	107 - 24										
	108 - 22										
37244		1							R	1680-601-7772	Y120
37415		2									
37552	98 - 7	2							R	4820-142-2987	G250
37688		1							R	6615-564-6685	VTIM
37690		1							R	1680-640-8800	XAIR
37690-1		1							R	1680-575-9481	XAIR
37690-4	219 -128	1									
	221 - 24										
	270 - 6										
38090	182 - 80	1		P1					R	1680-640-8800	XAIR
	358										
38090-1	183 - 77	1							R	1680-575-9481	XAIR
38090-2	182 - 80	1							R	1680-622-6234	XAIR
	183 - 77										
	270 - 80	1									
	271 - 34										
38094-1	222 - 12	2									
38094-2	222	2									
3815-7	60 - 3	1							R	1680-587-9214	X110
3891	41 - 32	6							R	5340-598-2741	GB90
39250		1							R	5935-204-9209	FANN
39645	136 - 92	1		P1	F	0	C		R	1650-095-1280	Y120
	139 - 45										
									R	5306-166-2097 OR	PPWA
397-1		3							R	5940-373-3702	D444
	318 - 75	1									
397-11		4							R	5940-373-3704	D444
397-12		4							R	5940-373-3705	D444
	285A- 28	2									
397-13		1							R	5940-373-3706	D444
397-15		9									
397-16		1		P1							
397-18		2							R	5940-090-4292	D444
397-2	287	8							R	5940-373-3711	D444
	287A										
	357										
397-3		7							R	5940-373-3712	D444
397-4		3							R	5940-373-3713	D444
397-5		4							R	5940-373-3714	D444
397-6		3							R	5940-373-3715	D444
397-7		4							R	5940-642-1372	D444
397-8		2							R	5940-373-3716	D444
397-9		1									
39837		1									
39854	111	1									
39855		1									
39860		1									
39869		1									
39871		1									
39901		1							R	1650-534-4304	Y120
39901-2		1									
39904		1									
39904-1		1									
4-06C		1							R	5945-500-5707	D39A
4-254-1		1		P1	F	0	R		R	2915-098-3534	Y120
4-254-191	110 - 3	1		P1	F	0	R		R	2915-994-1750	Y120
4-254-61		1							R	2915-341-4323	Y120
4-254-71		1		P1	F	0	R		R	2915-698-0511	Y120
4-254-91	110 - 4	1		P1	F	0	R		R	2915-601-0322	Y120
4-345-1		1									
4-354-1	93 - 40	1		P1	F	0	S		R	1650-545-8897	Y120
	195 -113										
	291 - 7										
4-354-71	93 - 44	1		P1	F	0	S		R	1650-546-3944	Y120
4-354-91	93 - 44	1		P1	F	0	S		R	2915-640-1227	Y120
	94 - 39										
481283-212	46 - 10	1									
4812M-S4-017		7		P	D	0	C				
4818-3		2									
4818-3-51	46 - 14	2		M		0					
4818-5-102	199 - 44	1		M		0					
4818-5-40	331	8		M		0					
4818-6-125	58 -160	1		M		0					

PART NUMBER	FIGURE AND INDEX	TOTAL QTY.	MICRO-FILM NUMBER	MAINTENANCE CODE DATA: SOURCE CODE	INSTL CAPABILITY	PRE-INSTL CAPABILITY	RECOVERABILITY	SUPPORT EQUIPMENT	COGNIZANCE CODE	FEDERAL STOCK NUMBER DATA: FEDERAL STOCK NUMBER	MFG. CODE (TSMC)
4818-6-156	58 -161	1		M		0					
4818-6-91		1		M		0					
4819-812-016	343 - 7	12									
	345A- 7										
	347 - 19										
4819-86-008	193	2									
4819-86-022	35 - 80	1									
4819-86-106	35 - 49	1									
4819810-006	184 - 84	1									
	185 - 48										
4819810-014	45 - 79	2		M		0					
4819812-008	184 - 82	2									
	186 - 66										
4819812-013	146 - 19	4		M		0					
4819812-016	344 - 31	10									
	345 - 31										
	346 - 31										
4819812-030		2									
4819812-11	58	1		M		0					
4819812-17	58 - 60	1		M		0					
4819820-27	361 - 29	3									
481983		1		M		0					
4819B3-004	199 - 21	4		M		0					
	199 - 43										
4819B3-008		1		M		0					
4819B3-013	205 - 57	1									
4819B3-016	193 - 7	1		M		0					
4819B3-026	195 - 86	4		M		0					
4819B4-004	18 - 26	12		M		0					
	18 - 59										
	18 - 80										
4819B4-007	264 - 58	1									
4819B4-008	16	4		M		0					
	188										
4819B4-010	195	1		M		0					
4819B4-012		2		M		0					
4819B4-014	195	1		M		0					
4819B5-002		4		M		0					
4819B5-003	195 - 13	1		M		0					
4819B5-004	164	2		M		0					
	165 - 66										
	199 - 42										
4819B5-005	172 - 25	2									
	172 - 97	2									
	264 - 57	2									
4819B5-006	316 - 12	4		M		0					
4819B5-007	58 - 93	1		M		0					
4819B5-008	13 - 52	5		M		0					
	64 - 83										
4819B5-009	264 - 28	2									
4819B5-010	64 - 86	6		M		0					
	168 - 13										
4819B5-012	200 - 65	3		M		0					
4819B5-015	168 - 8	2									
4819B5-100	259	1		M		0					
4819B6- 7		1		M		0					
4819B6-003	264 - 56	2									
4819B6-007	284 - 59	1									
4819B6-013	200 -128	4		X1							
	200 -141										
4819B6-014	200 - 66	2									
4819B6-019	45 - 58	2		M		0					
4819B6-022		2		M		0					
4819B6-024		1		M		0					
4819B6-106		2		M		0					
4819B7-007		4		M		0					
4819B7-014	200 - 66	2									
4819B7-025	58 - 92	1		M		0					
4819B7-14		2		M		0					
4819B8-016	61 - 70	4									
	61 - 92										
4819M-S11-022	61 - 48	6		N		0					
	61 - 63										
	61 - 85										
4819M-S20-108	24 - 5	4		M		0					
4819M-S22-108		2									
4819M-S22-212	24 - 6	2		M		0					
4819M-S3-006	196 - 26	2		M		0					
4819M-S3-017	316 - 3	2		M		0					
4819M-S4-004	16	4		X1							
	316 - 77										
4819M-S4-006	182	4		M		0					
4819M-S4-014	13 - 86	1									
4819M-S4-020	83 - 21	1		M		0					
4819M-S5-006	182	2		M		0					
4819M-S5-008	182	2		M		0					
4819M-S5-011	182	2		M		0					
4819M-S6-011	182 -153	2		M		0					
4819M-S6-012	12	2		X1							
4819M-S6-016	68 - 42	1		M		0					
4819M-S6-111	68 - 49	1									
4819M-S8-011	83 - 79	4									
4819M-S9-014		2		M		0					
4819N-S9-015	13 - 87	2		M		0					
4819SB315	366 - 31	2									
4819S10-011		4		M		0					
4819S10-012	54 - 4	3									
	54 - 28										
4819S10-028	16 -175	2		M		0					
4819S10-112	92 - 32	1		M		0					
4819S12-006	335 - 84	4									
4819S12-011	89 - 59	2		M		0					
4819S12-016	89 - 51	4		M		0					
4819S12-018	89 - 62	8		M		0					
4819S12-024	89 - 60	4		M		0					

PART NUMBER	FIGURE AND INDEX	TOTAL QTY.	MICRO-FILM NUMBER	MAINTENANCE CODE DATA: SOURCE CODE	INSTL CAPABILITY	PRE-INSTL CAPABILITY	RECOVERABILITY	SUPPORT EQUIPMENT	COGNIZANCE CODE	FEDERAL STOCK NUMBER DATA: FEDERAL STOCK NUMBER	MFG. CODE (TSMC)
4B19S12-118	89	16		M		0					
4B19S14-017	16 - 45	2									
4B19S14019		4		M		0					
4B19S16-012		4		M		0					
4B19S16-108	16 -156	2		M		0					
4B19S3-003		2		M		0					
4B19S3-004		3		M		0					
4B19S3-005	56 - 25	1									
4B19S3-006		2									
4B19S3-009	53 - 53	1		M		0					
4B19S3-010		1		M		0					
4B19S3-016	259 -260	4		M		0					
	316 - 53										
4B19S3-018		1		M		0					
4B19S3-023	195 - 31	1									
4B19S3-028	259 - 76	2		M		0					
4B19S3-21	259 -213	2		M		0					
4B19S4-006	171 - 34	2									
	171 - 69	8		M		0					
4B19S4-008	92 - 9	2		M		0					
4B19S4-010		2									
4B19S4-012	91	4		M		0					
4B19S4-014		1		M		0					
4B19S4-019		4		M		0					
4B19S4-020	182	2		M		0					
	183										
4B19S4-022	197 - 39	1									
	198 - 34										
4B19S4-031		2									
4B19S4-105	89 - 22	4		M		0					
4B19S4-110	191	4		M		0					
	192										
4B19S4-50	47 - 14	2									
4B19S5-002	56 - 69	4		M		0					
	60 - 42										
4B19S5-004	16	2		M		0					
4B19S5-006	193	2		M		0					
4B19S5-008		8									
4B19S5-009		1									
4B19S5-010	89 - 56	6		M		0					
	90 - 5										
	91 - 48										
4B19S5-103	59 - 24	1		M		0					
4B19S5-123		1		M		0					
4B19S6-004	16	2									
4B19S6-008	16 -160	2		M		0					
	91 - 50										
4B19S6-010	89 - 58	2		M		0					
4B19S6-012		1		M		0					
4B19S6-027	53 - 52	1		M		0					
4B19S6-030	89 - 28	2		M		0					
4B19S6-113	78 - 70	2		M		0					
4B19S7-006	113	2		M		0					
4B19S7-010	16 -176	4		M		0					
4B19S7-016		1									
4B19S8-014	131 - 49	1		M		0					
4B19S8-015		1		M		0					
4B19S9-014		1		M		0					
4B194-006	171 - 34	1									
4B19S4-022		1		M		0					
4B19S6-012	200 -103	1									
4B283-006		1									
4B2M-S4-027	175 - 99	1									
4B2M-S5-100		3									
4B20-B12-016	345A- 8	4									
	347 - 16										
4B20-B7-008	186 - 22	2									
4B20-S6-008	128 - 44	2									
4B20-S4-008	182	1									
4B20B10-006	184	4		M		0					
	185 - 68										
4B20B12-006	184 - 83	2									
	186										
4B20B12-008	186 - 67	2		M		0					
4B20B12-016	344 - 30	6									
	345 - 30										
	346 - 30										
4B20B12-030	186 - 53	4		M		0					
4B20B14-010	193	1		M		0					
4B20B20-011	188	1									
4B20B3-005		2									
4B20B3-015		2		M		0					
4B20B4-005	175	3									
	205 - 28										
4B20B4-006		4		M		0					
4B20B4-008	175 - 95	4									
4B20B4-009		2		M		0					
4B20B4-011		2									
4B20B4-111		2		M		0					
4B20B5-003	45 - 93	4		M		0					
4B20B5-004	41	2		M		0					
4B20B5-006	25 - 34	4		M		0					
4B20B5-007	45 - 94	4		M		0					
4B20B5-008	52 - 13	12		M		0					
	52 - 40										
4B20B5-10	200 - 59	2		M		0					
4B20B6-004	172 - 28	2									
	172 - 39	2									
	172 -100	2									
4B20B6-005	172 -107	2									
4B20B6-006		2									
4B20B6-008	174 - 43	4		M		0					
	174 - 50										
4B20B6-009	138 - 13	2									
4B20B6-010	43 - 75	4		M		0					

PART NUMBER	FIGURE AND INDEX	TOTAL QTY.	MICRO-FILM NUMBER	MAINTENANCE CODE DATA: SOURCE CODE	INSTL CAPABILITY	PRE-INSTL CAPABILITY	RECOVERABILITY	SUPPORT EQUIPMENT	COGNIZANCE CODE	FEDERAL STOCK NUMBER DATA: FEDERAL STOCK NUMBER	MFG. CODE (TSMC)
4B20B6-011	172 - 26	2									
	172 - 98	2									
4B20B6-012	12 - 63	4		M		0					
4B20B6-016	316 - 38	2		M		0					
4B20B6-017	138 - 66	2									
4B20B6-020	138 - 11	2									
4B20B6-024	316 - 39	2		M		0					
4B20B6-14	36 - 18	4		M		0					
4B20B7-005	259	4		M		0					
4B20B7-008		4		M		0					
4B20B7-010	65 - 75	2									
4B20B8-010	193	5		M		0					
4B20B9-010	78 - 49	4		M		0					
4B20B9-014	196	1									
	196 - 37	2		M		0					
4B20B9-016	78	4		M		0					
4B20M-S10-006		4		M		0					
4B20M-S10-008		2									
4B20M-S10-010		2		M		0					
4B20M-S10-013	84 - 84	2		M		0					
4B20M-S10-014		4		M		0					
4B20M-S12-007		2									
4B20M-S12-019	84 - 60	2		M		0					
4B20M-S12-020	84 - 83	2		M		0					
4B20M-S14-010	37 - 14	1		M		0					
4B20M-S16-030	68 - 62	2		M		0					
4B20M-S16-110	48 - 47	2		M		0					
	113 - 26										
4B20M-S16-43		2									
4B20M-S18-016	49	4		M		0					
4B20M-S3-003	195	2		M		0					
4B20M-S3-004	193	1									
4B20M-S3-011	64 - 48	4		M		0					
4B20M-S3-012	75 - 7	2									
4B20M-S4-008	183	2									
4B20M-S4-009	182 - 50	2		M		0					
	183 - 50										
4B20M-S4-010		1									
4B20M-S5-005	87	6		M		0					
4B20M-S5-017	121 - 43	2		M		0					
4B20M-S6-005	12	4		M		0					
4B20M-S6-006	175 -103	2									
4B20M-S6-008	205 -119	1		M		0					
	205 -128										
4B20M-S6-010	205 -122	1		M		0					
	205 -125										
4B20M-S6-012	64 - 47	2		M		0					
4B20M-S6-014	64 - 22	2		M		0					
4B20M-S6-016	64 - 68	4		M		0					
4B20M-S7-006	45	4		M		0					
4B20M-S7-008	45	4		M		0					
4B20M-S7-010	16	4		M		0					
	45										
	316 - 76										
4B20M-S7-011	40 - 4	4		M		0					
	40 - 7										
4B20M-S7-012	4			M		0					
4B20M-S8-010	182	2									
4B20M-S8-018	183	2									
4B20M-S9-018		1		M		0					
4B20M-S9-18	176 - 96	2									
4B20S10-011	16	2									
4B20S10-013	49 - 16	4		M		0					
4B20S3-12	75 - 19	2		M		0					
4B20S4-004	182 - 12	1									
	183 - 12										
4B20S4-006	182 - 13	1									
	183 - 13										
4B20S5-008	11	4		M		0					
4B20S6-005	21 - 40	12		M		0					
	21 - 44										
	21 - 48										
4B20S6-007	144	2		M		0					
4B20S6-008	39 - 3	7		M		0					
	131 - 39										
	174 - 42										
4B20S6-011	64 - 42	2		M		0					
4B20S6-109	174 - 51	2		M		0					
4B20S7-009	113	2		M		0					
4B20S7-010	176 -133	2									
4B20S7-012	78 - 21	2									
4B20S7-024	71 - 38	4		M		0					
4B20S8-006	58 - 84	1									
4B20S8-012	48 - 7	2		M		0					
4B20S8-014	87 - 3	4		M		0					
4B20S8-024	11	4		M		0					
4B20S9-026	8 - 6	2		M		0					
4B2010-006	185	1									
4B21-S10-200	362A	2									
4B21-3S-008		4		M		0					
4B21-35008		4									
4B21-5S129		2		M		0					
4B21-55200		2		M		0					
4B21-53-004		2									
4B21-53-200	42 - 55	1									
4B21B1-014	83 - 58	1									
4B21B12-006	68 - 5	1									
4B21B12-031	58 - 56	1									
4B21B3-005	58 - 26	4									
	58 - 97										
	58 -115										
	58 -122										
4B21B3-006	205 - 39	1									
4B21B3-007	193	2		M		0					
4B21B3-008	58 - 31	1									

PART NUMBER	FIGURE AND INDEX	TOTAL QTY.	MICRO-FILM NUMBER	MAINTENANCE CODE DATA: SOURCE CODE	INSTL CAPABILITY	PRE-INSTL CAPABILITY	RECOVERABILITY	SUPPORT EQUIPMENT	COGNIZANCE CODE	FEDERAL STOCK NUMBER DATA: FEDERAL STOCK NUMBER	MFG. CODE (TSMC)
4B2183-010		2		M		O					
4B2183-014		1		M		O					
4B2183-016	41	2		M		O					
4B2183-104	59 - 47	1									
4B2183-113	56	4		M		O					
	60										
4B2183-212		1		M		O					
4B2184-005	174	4		M		O					
4B2184-006	11 - 5	1									
4B2184-010	193	4		M		O					
	358										
4B2184-014	83 - 58	1									
	172 - 91	1									
	205 -110										
4B2184-016	172 -106	1									
4B2184-018	12	2		M		O					
4B2184-024		1		M		O					
4B2184-028		2		M		O					
4B2184-031	12	2		M		O					
4B2184-104	172 - 95	1									
4B2184-105		1		M		F					
4B2185-021	66 - 27	1		M		O					
4B2185-027	58 - 90	1									
4B2186-14		1									
4B2186-16		1									
4B2187-14		1									
4B21M-S10-020		1									
4B21M-S10-120	84 - 88	1		M		O					
4B21M-S10-121		1		M		O					
4B21M-S11-022		6									
4B21M-S12-022		4									
4B21M-S16-022	2 - 16	4		M		O					
4B21M-S3-003	59A- 30	4									
4B21M-S3-005	45 - 87	2		M		O					
4B21M-S3-006	59A- 8	2									
4B21M-S3-007	59A- 16	2		M		O					
	59A- 47										
	188 - 82										
	188 - 86										
4B21M-S3-008	199 - 41	1		M		O					
4B21M-S3-011	46 - 16	1									
4B21M-S3-012	45 - 97	2		M		O					
4B21M-S3-019		1									
4B21M-S3-020	45 - 91	2		M		O					
	59A- 54										
4B21M-S3-029	11 - 15	2		M		O					
4B21M-S3-101	11 - 17	2		M		O					
4B21M-S3-7	335A- 15	1		M		O					
4B21M-S4-005	58 - 13	2		M		O					
	58 -138										
4B21M-S4-011	66 - 45	1		M		O					
4B21M-S4-012	58 - 54	2		M		O					
	58 - 70										
4B21M-S4-014	66 - 44	6		M		O					
	172	1									
	172 - 23	1									
	172 - 34	1									
	200 -118										
	200 -139										
4B21M-S4-016	68 - 41	1		M		O					
	172	1									
4B21M-S4-017	19 - 50	6									
4B21M-S4-018		1									
4B21M-S4-019	46 - 23	1									
4B21M-S4-020	45 - 56	2		M		O					
4B21M-S4-021		1									
4B21M-S4-025	183 -192	1									
4B21M-S4-027		1									
4B21M-S4-104	172	1									
	172 - 19	1									
4B21M-S4-111	68 - 51	1									
4B21M-S4-17	335A- 6	1									
4B21M-S5-011		1									
4B21M-S5-017		1									
4B21M-S5-019	259 -151	2		M		O					
4B21M-S5-028	40 - 18	1									
4B21M-S5-029	186 - 10	2		M		O					
4B21M-S5-100	176 -130	3									
4B21M-S5-102	40 - 19	1		M		O					
4B21M-S5-126	78 - 14	1		M		O					
4B21M-S6-018	46 - 24	1		M		O					
4B21M-S6-024		1									
4B21M-S6-028	182 - 55	1		M		O					
	183 - 55										
	358										
4B21M-S7-113	78 - 55	1		M		O					
4B21M-S7-202	78 - 18	2		M		O					
4B21M-S8-004	128 -109	1									
	138 - 49										
	155 - 27										
4B21M-S8-005	128 -108	2		M		O					
	155										
4B2153-004	199 - 25	2									
	199 - 30										
4B2153-005		1									
4B2153-006	58 - 75	3		M		O					
	64 - 56										
4B2153-007	193	2		M		O					
4B2153-008	65 - 14	4		M		O					
	83 - 74										
4B2153-010		1									
4B2153-011	64 - 80	2		M		O					
4B2153-012	12 - 55	2									
4B2153-013	195 - 70	1		M		O					
	225 - 4										

PART NUMBER	FIGURE AND INDEX	TOTAL QTY.	MICRO-FILM NUMBER	MAINTENANCE CODE DATA: SOURCE CODE	INSTL CAPABILITY	PRE-INSTL CAPABILITY	RECOVERABILITY	SUPPORT EQUIPMENT	COGNIZANCE CODE	FEDERAL STOCK NUMBER DATA: FEDERAL STOCK NUMBER	MFG. CODE (TSMC)
	225 - 33										
4B2153-017	259 -255	4		M		O					
4B2153-02		4									
	71 - 68	4		M		O					
4B2153-021	51 - 29	3		M		O					
4B2153-024	259 - 19	2		M		O					
4B2153-026	259 - 45	1		M		O					
4B2153-08	35	4									
4B2153-09	35	1									
4B2153-100	259 - 25	1		M		O					
4B2153-104	59 - 23	1		M		O					
4B2153-106		1		M		O					
4B2153-107	186 - 30	2		M		O					
4B2153-109	34 - 30	2									
4B2153-120	41 - 55	6		M		O					
4B2153-124		1		M		O					
4B2153-200	35	2		M		O					
4B2153-5	62 - 10	1									
4B2153-9	197	1		M		O					
	198										
4B2154-007	65 - 46	1									
4B2154-010		2									
4B2154-011	54 - 23	2		M		O					
	174 - 38										
4B2154-014	39 - 7	4									
	198 - 68										
	200 - 94										
4B2154-015	12	1									
4B2154-016		1		M		O					
4B2154-017	25 - 59	2									
4B2154-018		1									
4B2154-020	64 - 7	1									
4B2154-022	64 - 4	1									
	64 - 54										
	144										
4B2154-024		1									
4B2154-102	174	1									
4B2154-103	53 - 36	2		M		O					
4B2154-105	43 - 72	1									
4B2154-109	138 - 17	1									
4B2154-112	174 - 46	2									
4B2154-113	138 - 19	1									
4B2154-114	174	1									
4B2154-123	138 - 18	1									
	176										
4B2154-124		2		M		O					
4B2154-16	183 - 7	4									
	183 - 8										
	183 - 19										
4B2154-204	36 - 16	2		M		O					
4B2159-006	121 - 8	3		M		O					
	229 - 3										
	225 - 32										
4B2155-010	316 - 92	2		M		O					
	PG. 1004										
4B2155-028	316 - 91	2		M		O					
4B2155-100	69 - 71	2									
4B2155-102	56 - 68	4		M		F					
	60 - 41										
4B2155-129	71 - 47	2									
4B2155-202		1									
4B2156-010	185 - 34	1									
4B2156-015	25 - 61	1									
4B2156-016		1		M		O					
4B2156-018	64	1									
4B2156-020	64 - 72	1									
4B2156-022		1		M		O					
4B2156-201	11 - 33	2		M		O					
4B2157-020	66 - 28	1		M		O					
4B2154-124	316 - 35	1									
4B2184-010		1									
4B22-48	184 -135	1									
	185 - 95										
	191 - 43										
	192										
4B22-58	180 - 87	1									
4B24-64	195	1									
	197 - 72										
4B27M-S4-111		1									
4B27M54-111		1		M		O					
4DR9	51 - 47	2		M		O			R	3110-159-1653	G730
4D1-5-097	350 - 32	1									
4D15097		1		M		O					
4F1-10M		2		P1	O	O	C		R	1560-535-5532	ANAA
4F1-12M		2									
4F1-15F		1		P1	O	O	C		R	1560-535-5533	ANAA
4F1-15M		12		P1		O	C		R	1560-607-7991	ANAA
4F1C12M		1		P1	O	O	C				
4F1C20M		1		P1	O	O	C		R	1500-C00-2300	ANAA
4F1C40M		1		P1	O	O	C				
4F1F15		1		P1	O	O	C				
4F1M15		1		P1	O	O	C				
4JX55	254 - 5	1							R	5915-376-2121	F642
4R1-14	44	13		M		O			R	5325-292-1794	GH80
4R15-14-102	44	13							R	5325-634-6772	GH80
4R19-14-10R		2		M		O					
4R19-14-102	44	10							R	5325-201-2174	GH80
4S10-1	44 -101	13		M		O			R	5340-698-0491	GH80
4S3D10-6		1									
4S4-5-8	48	1		M		O					
4S4D-10		1									
4S4D4-10	PG. 1015	4		M		O					
	PG. 1023										
4S4D4-4		1		M		O					
4S4D6-11	187 - 17	4		M		O					

PART NUMBER	FIGURE AND INDEX	TOTAL QTY.	MICRO-FILM NUMBER	MAINTENANCE CODE DATA: SOURCE CODE	INSTL CAPABILITY	PRE-INSTL CAPABILITY	RECOVERABILITY	SUPPORT EQUIPMENT	FEDERAL STOCK NUMBER DATA: COGNIZANCE CODE	FEDERAL STOCK NUMBER	MFG. CODE (TSMC)
454D6-24	187 - 4	4		M		0					
456-3-0.260	204 - 43	1		M		0					
456-3-0.406	190 - 15	1									
456-4.344	205 - 55	1									
456-4.405		1									
456-4-.134		1									
456-4-.313		1									
456-4-.344		1									
456-4-0.134	198	1									
456-4-0.313	155	1									
456-4-0.344	205 - 53	1									
456-4-0.395	198	1									
456-4-0.405	189 - 96	1									
456-4-0.500	201 - 12	1									
456-4-1.131	180	2		M		0					
456-4-329	203 - 40	1		M		0					
456-5-0.556	189 -101	1									
	189 -103	1									
456-5-0556		1									
456-6-0.478		1									
456-6-3.194	205 - 73	1									
457-1-.562		6									
457-1-0.562	19 - 68	1									
457-1-1.187	198	1		M		0					
457-1-1.191	197	1		M		0					
457-1-1.593	198	2									
457-1-562		6		M		0					
457-4	44 - 71	23		M		0			R	5325-291-0191	GH80
457-4-.610		1									
457-4-.688		1									
457-4-.883		1									
457-4-0.599	182	1									
	183										
457-4-0.750	63	1		M		0					
457-4-0.828	175	1									
457-4-0.883	174	1									
457-4-0599		1		M		0					
457-4-1.005	183	1									
457-4-1.055	182	1									
457-4-1.078	176	1									
457-4-1.131	180	1		M		0					
457-4-1.158	176	1									
457-4-1.267		2									
457-4-1.407	200 - 71	1									
457-4-1.485	184 -133	1									
	185 - 93										
457-4-2.578	175	1									
457-4-688	180	4		P1	F	0	C		R	1560-535-5534	ANAA
457-4-750		1									
457-4-883		1		P1	F	0	C				
457-5-1.094	80 - 28	1									
457-5-2.220	188 - 20	1									
457-68		2							R	5325-641-2R85	GH80
457-9-0.723	175	1									
459-1		2									
4W40J6R3		1							R	5905-279-7493	E222
40G1-5	71	14		P1					R	5325-340-1609	GH80
4006-1	334	1									
4055-4	334 -141	1									
4055-6	334 -106	2									
4058-3-18	70 - 16	1							R	5325-141-7562	GH80
	71 - 17										
4058-4-18		1									
4000-14		1							R	5930-258-5576	V170
4000-24	123 - 51	4							R	5930-258-5577	V170
	127 - 44										
	245 - 6										
	245 - 7										
	245 - 9										
	245 - 11										
	288 - 11										
	288 - 12										
4000A	362A- 38	1									
4002-G	334	2									
4002-3	70 - 15	13							R	5325-639-4889	GH80
	71 - 16										
4002-4		13									
4002-6		2									
40025W	71	1									
40500-1	362 - 19	1									
408600	PG. 1007										
	362 - 54	1							R	1740-545-8917	S030
41040-35		2									
4106	PG. 1004	1									
411149		1									
4125-17	231 - 20	1							R	1680-305-4525	Y120
	350 - 13										
414-15DBL-18		1							R	5930-636-4244	V170
414-15DBL-19		1									
414-15DSL18		1									
414035	285 - 8	2									
	285 - 43										
	285 - 56										
	287 - 8										
	287 - 15										
415394-2		2									
4176-16		1									
4176-16H		2									
4176-32		2									
4176-32H	112 - 3	2							R	4730-203-0502	G250
4176-324		2									
4177-16H	98 - 14	2							R	4730-289-1563	G250
4177-32		2									
4177-32H	112	2							R	4730-289-1562	G250
4177A		2									

PART NUMBER	FIGURE AND INDEX	TOTAL QTY.	MICRO-FILM NUMBER	MAINTENANCE CODE DATA: SOURCE CODE	INSTL CAPABILITY	PRE-INSTL CAPABILITY	RECOVERABILITY	SUPPORT EQUIPMENT	FEDERAL STOCK NUMBER DATA: COGNIZANCE CODE	FEDERAL STOCK NUMBER	MFG. CODE (TSMC)
4178-16	98	4							R	5330-599-2528	GB90
	100 -112										
4178-24	102 -102	2									
	103 - 47										
4178-32	99 - 76	4									
	100 - 98										
	101 - 89										
	102 - 65										
	103 - 51										
	112 - 11										
418		1									
419		1									
42D10-048		1							R	5310-275-0732	G190
42FW-524		2									
42NE-054	329	4									
420-.750-2.500SH	PG. 1021										
	PG. 1027										
	351 - 7	2							R	4730-595-3918	GH80
420-.750-25005H		2		M		0					
421M-55-028		1									
42570	271 - 14	1									
42570-1	271 - 14	1							R	6615-575-9346	VAIO
428AF10		20									
432924	264 - 91	1									
433421	264 - 92	1									
	265 - 6										
	318 - 47										
436-4-0.500		1		M		0					
43688-100	350 - 86	2							R	5340-663-9853	GH80
43688-125	350 - 12	2							R	5340-597-8739	GH90
43688-150	350 - 15	19							R	5340-329-1133	GH80
	351										
43688-200	351	1							R	5340-329-1136	GH80
43688-300	351	1							R	5340-597-8761	GH80
43688-400	350 - 9	1							R	5340-597-8759	GH80
43688-450	350 - 55	1							R	5340-329-1143	GH80
4369-219S	98 - 40	3									
	99 - 45										
4369-219S11		1									
4369-250-S	103 - 77	1									
4369-250-S	103 -124	1									
4369-250S	95 - 92	4									
	96 - 25										
	97 - 95										
	102 - 88										
	102 -115										
4369-300-S	103 - 38	1									
4369-300S	99 - 67	1							R	5340-597-8586	GH80
	100 - 83										
	100 -147										
	101 - 80										
	102 - 56										
	103 - 38										
43850		1							R	5985-373-1863	F632
43924		1									
44080		1		P1	F	0	R		R	1650-508-7043	ZAIR
	125 -128	1									
441149	264	1									
441149-2	318 - 48	1									
442006	285 - 3	1							R	5920-28D-4168	D336
	285 - 35										
	287 - 7										
442006-SA1	284 - 31	1									
4471	213 - 65	1							R	5355-667-9292	GH80
450-515-20		1									
4510-1		1									
4559		1							R	6240-283-9901	
457-4		1									
4580	261 - 18	1							R	1650-439-1337	Y120
460-015- 20		1							R	5330	
460-615-20		1									
460-615420	111 - 5	1									
4600-02		7		M		0					
4600-048		21									
4600-2-02		3									
4600-2-82		6									
4600BF-1/2-MM		1									
4600F-5/8-MM		2									
4630H02		21							R	5300-C00-1316	G190
4630H048		8									
4660-02	9	9							R	5310-208-2395	G190
4660H82		4									
47A1582	64	2									
471T100-1	173 - 1	4							R	1680-601-0260	X110
	173 - 2										
	173 - 61										
	173 - 62										
471T100-301	173 - 1	1									
	173 - 2										
	173 - 61										
	173 - 62										
471119	173 - 3	1									
	173 - 63										
471142-1	173	1									
476-2	123 -105	1							R	6615-611-1762	VSGF
	189 -122	1									
	294 - 11										
476-2A		1							R	6615-620-4981	VSGI
48A9H1		1									
48A9H2		1									
48A9H3		1									
48A99H1	333	1									
480	256 - 39	2							R	5340-514-1348	GH80
									R	2810-116-2871 OR	PPWA

PART NUMBER	FIGURE AND INDEX	TOTAL QTY.	MICRO-FILM NUMBER	MAINTENANCE CODE DATA: SOURCE CODE	INST'L CAPABILITY	PRE-INST'L CAPABILITY	RECOVERABILITY	SUPPORT EQUIPMENT	FEDERAL STOCK NUMBER DATA: COGNIZANCE CODE	FEDERAL STOCK NUMBER	MFG. CODE (TSMC)
4B1-4P		1									
4B132	179 - 11	1									
4B155	344 - 11	6							R	5340-270-8536	GH80
	345 - 11										
	346 - 11										
482J	PG. 1004	2									
	PG. 1005										
482512E4		2									
4820-812-016	343 - 8	2									
489810		10									
49-558		1							R	6150-315-3841	D446
4996D		4									
5-1452-048	316 - 18	1									
5-2200		1							R	2915-303-6444	Y120
5-2200-5	116 - 63	1									
5-354-1	93 - 35	1		P1	F	0	S		P	1650-562-8359	Y120
	94 - 33										
	94 - 34										
	95 - 33										
	97 - 28										
5-54818-13	355	1									
	PG. 1021										
5-54818-15	355	1									
	PG. 1021										
5-54818-3	355	1							R	1680-098-2340	X110
	PG. 1021										
5-54818-5	355	1							R	1680-098-2341	X110
	PG. 1021										
5AT1		1									
5AT3		3							R	5930-548-3142	D334
5AT4		1							R	5930-548-3147	D334
5B1-10		10		P	F	0	C		R	5306-206-9541	
5B1-10DH	12 - 25	2		P	F	0	C				
5B1-13DH	12 - 36	2		P	F	0	C				
5B1-20	266 - 21	2							R	5306-297-2673	G190
5B1-7		10		P					R	5306-428-0402	ANAA
5B16	274	2		P1	F	0	C		R	1560-376-6539	ANAA
5B18C4A	355 - 5	16		P1					R	5306-283-0450	G190
	355 - 14										
	PG. 1017										
	PG. 1018										
5B18C4B		16							R	5306-283-0450	G190
5B18C7A	355	4		P1					R	5300-C00-0248	G190
	PG. 1017										
	PG. 1018										
5B2-10		2		P	F	0	C		R	5305-638-1926	ANAA
5B2-12	18 - 68	6		P					R	5305-638-1918	ANAA
	64 - 92										
5B2-13		12		P	F	0	C		R	5305-638-1917	ANAA
5B2-14		2		P	F	0	C		R	5305-638-1951	ANAA
5B2-5		2							R	5305-207-2563	G190
5B2-5DH	164 -100	4		P	F	0	C		R	5306-207-4589	G190
	164 -103										
	165 - 93										
5B2-6DH	176 - 38	1							R	5305-515-6907	G192
5B2-7	171 - 54	2		P	F	0	C				
	357										
5B21-428-17	278 - 18	1		P	F	0	C				
5B21-428-18	45 - 73	2		P	F	0	C				
5B21-428-31	200 - 54	2		P					R	5306-579-3144	ANAA
5B24-10-100		2									
5B24-12-12		2									
5B24-14-36		4									
5B24-14-39		9									
5B24-14-41		1									
5B24-14-42		8									
5B24-14-45		6									
5B24-14-54		2									
5B24-14-66		4									
5B24-14-82		2									
5B24-18-92		2									
5B24-4- 4		14		P							
5B24-4-10		50									
5B24-4-11		10									
5B24-4-12		8		P							
5B24-4-13		4									
5B24-4-14		2									
5B24-4-15		6									
5B24-4-16		16									
5B24-4-20		6									
5B24-4-22		4									
5B24-4-23		2									
5B24-4-24		7									
5B24-4-25		4									
5B24-4-26		39									
5B24-4-27		48									
5B24-4-28		5									
5B24-4-29		13		P							
5B24-4-30		27									
5B24-4-31		11		P							
5B24-4-32		10									
5B24-4-33		2									
5B24-4-37		2									
5B24-4-4		18									
5B24-4-42		2									
5B24-4-6		92		P	F	0	C				
5B24-4-8		7									
5B24-5-10		22		P	F	0	C				
5B24-5-12		54		P	F	0	C				
5B24-5-13		8									
5B24-5-14		2									
5B24-5-16		12		P	F	0	C				
5B24-5-30		2									
5B24-5-32		2									
5B24-5-35		8									
5B24-5-36		4									
5B24-5-6		10		P	F	0	C				
5B24-5-7		22									
5B24-5-8		4		P							
5B24-5-9		10									
5B24-6-10		8		P							
5B24-6-12		14		P	F	0	C				
5B24-6-13		2									
5B24-6-16		4		P							
5B24-6-17		4									
5B24-6-18		2									
5B24-6-19		6		P							
5B24-6-20		4									
5B24-6-22		2									
5B24-6-24		8									
5B24-6-25		2									
5B24-6-28		4									
5B24-6-29		2									
5B24-6-30		1									
5B24-6-32		1									
5B24-6-33		3									
5B24-6-34		7		P							
5B24-6-36		2									
5B24-6-37		2									
5B24-6-38		4									
5B24-6-41		4									
5B24-6-45		4									
5B24-6-48		2									
5B24-6-6		4		P	F	0	C				
5B24-6-8		10		P							
5B24-6-9		4									
5B24-7-12		2									
5B24-7-14		8									
5B24-7-18		4									
5B24-7-20		2									
5B24-7-31		2		P							
5B24-7-33		6									
5B24-7-34		5									
5B24-7-35		6									
5B24-7-36		1									
5B24-7-37		2									
5B24-7-39		2									
5B24-7-40		1									
5B24-7-8		2									
5B24-8-16		4									
5B24-8-23		4							R	5306-637-5738	G190
5B24-8-26		4									
5B24-8-9		2		P							
5B24-9-16		2									
5B25-516-10		12									
5B25-616H10A	355 -168	16		P1	F	0	C		R	5306-292-4392	G190
	PG. 1021										
	PG. 1027										
5B25-616H11A	355 -172	4		P1	F	0	C		R	5306-638-3009	G190
	PG. 1021										
	PG. 1027										
5B25-616H12A	355 -171	16		P	F	0	C		R	5306-292-4380	G190
	PG. 1021										
	PG. 1027										
5B26-516-10	355	12		P1	F	0	C		R	5306-613-1378	ANAA
	PG. 1021										
	PG. 1027										
5B26-616H11A		1									
5B27D38-25		2		M		0					
5B27D38-29	274 - 16	2									
5B28-41-11A	PG. 1008	1									
5B28-41-14A		1									
5B28-41-6A	PG. 1008	1									
5B28-51-11A	PG. 1008	1									
5B28-51-15A		1									
5B30-516-10		1							R	5306-586-4537	G190
5B36		2									
5B8	180	1									
5C12		32		M		0					
5H2-3		1									
5L3070-1	331 - 23	2		P1					R	1005-341-4413	B210
5L3070-2	331	2		P1					R	1005-569-5344	B210
5NCC1011P	45 - 11	2							R	3110-227-2790	G730
5P21		2									
5P25-11		1		M		0					
5P25-13		1		M		0					
5P25-14		1		M		0					
5P25-5		1		M		0					
5P25-7		1		M		0					
5P25-8		1		M		0					
5P29	128 - 65	4		M		0					
	131 - 97										
	138 - 69										
	155 - 75										
5P30		1		M		0					
5P33	141 - 52	25									
	142 - 31										
	143 - 20										
	145 - 28										
	146 - 15										
	147 - 22										
	157 - 18										
	161 - 6										
	166 - 29										
	167 - 26										
	168 - 23										
5P35		2									
5P48	4	37		M		0					
	20 - 50										
	20 - 55										

PART NUMBER	FIGURE AND INDEX	TOTAL QTY.	MICRO-FILM NUMBER	MAINTENANCE CODE DATA: SOURCE CODE	INSTL CAPABILITY	PRE-INSTL CAPABILITY	RECOVERABILITY	SUPPORT EQUIPMENT	FEDERAL STOCK NUMBER DATA: COGNIZANCE CODE	FEDERAL STOCK NUMBER	MFG. CODE (TSMC)
	21 - 3										
	21 - 61										
	52 - 72										
	72 - 39										
	89 - 82										
	357										
	358										
5P53	154 - 79	1									
5R10	56 -165	5		M		O					
	58 -169										
	63 - 45										
	63 - 49										
	63 - 56										
	117										
	122										
	212										
	269A- 39	1									
	333 - 73										
	333 - 82										
	334										
	335 - 77	2									
	355 -215										
	362										
5R13-11	350 - 6	1		P1	F	O	C		R	1560-563-5698	GB90
5R13-15	350 - 11	2		P1	F	O	C		R	1560-563-5700	GB90
5R13-17	350 - 85	2		P1					R	1560-563-5701	GB90
5R13-3	350 - 14	21		P1	F	O	C		R	1560-563-5702	GB90
	PG. 1021										
	PG. 1027										
	351 - 5										
5R13-5	351	4		P1	F	O	C		R	1560-560-8346	GB90
	356 - 4										
	PG. 1021										
5R13-9	351	1		P1	F	O	C		R	1560-563-5703	GB90
5R14-1	84 - 75	2		P1	F	O	C		R	5330-171-9857	ANAA
5R14-14		4									
5R14-15	84 - 40	4		P1	F	O	C		R	5330-171-9860	ANAA
	84 - 56										
5R14-2		8		P1	F	O	C				
5R14-3	131 - 11	4		P1	F	O	C				
	131 - 36										
5R14-6	149 - 29	4		P1							
5R14-8	84 - 19	6		P1	F	O	C		R	5330-171-9859	ANAA
	84 - 28										
	131 - 24										
5R16-10		12		P1	F	O	C				
5R16-12		4									
5R16-13		2		P1							
5R16-14	131 - 81	8		P1	F	O	C				
5R16-16		2		P1							
5R16-19	149 - 27	8		P1							
5R16-22	84 - 17	12		P1	F	O	C		R	5330-171-6757	GB90
	131 - 14										
5R16-24		6		P1	F	O	C				
5R16-26		4		P1							
5R16-27		6		P1	F	O	C				
5R16-29	149 - 34	2		P1							
5R16-30	131 - 19	4		P1	F	O	C				
5R16-31	84 - 23	2		P1	F	O	C				
5R16-36	84 - 48	2		P1	F	O	C				
5R16-48		4		P1	F	O	C				
5R16-5	84 - 44	4		P1	F	O	C				
	131 - 68										
5R16-6	131 - 70	2		P1	F	O	C		R	5330-641-0103	GB90
5R16-7	84 - 51	8		P1	F	O	C				
5R16-8		4		P1	F	O	C				
5R16-9		2		P1							
5R17-10	PG. 1021	1									
5R17-12	54 - 57	1		P1							
5S6	350	42		M		F					
	351										
5S7-3-11-1-10		1		M		F					
5S7-3-12-1-11		2		M		F					
5S7-3-13-1-12		1									
5S7-3-14-1-13		3		M		F					
5S7-3-16-1-13		1									
5S7-3-16-1-15		1		M		F					
5S7-3-17-1-16		1		M		F					
5S7-3-2-1		2		M		F					
5S7-3-3-1-2	287A	2		M		F					
	357										
5S7-3-3-7-2		4		M		O					
5S7-3-4-1-3		1		M		F					
5S7-3-5-1-4	251 - 27	1		M		F					
5S7-3-6-1-5		3									
5S7-3-7-1-6		3		M		F					
5S7-3-8-1-7		8		M		F					
5S7-3-9-1-8		1		M		F					
5T14-15		4		M		F					
5T14-2	357	2									
5T14-3	357	2									
5T14-4		1									
5T14-5		1									
5T16R30		2		M		F					
5T16R63		2		M		F					
5T16R64		2		M		F					
5T16R7		1		M		F					
5T16R8		1		M		F					
5W-6-10-8		2									
5W1-3-34	121 - 3	2		M		O					
5W1-3-35	121 - 5	2		M		O					
5W1-4-12-0	33 - 8	1		M		O					
5W1-4-12A		1									
5W1-6-10-8	119 - 12	4		M		F					
5W1-6-25-9	119 - 17	4		M		F					

PART NUMBER	FIGURE AND INDEX	TOTAL QTY.	MICRO-FILM NUMBER	MAINTENANCE CODE DATA: SOURCE CODE	INSTL CAPABILITY	PRE-INSTL CAPABILITY	RECOVERABILITY	SUPPORT EQUIPMENT	FEDERAL STOCK NUMBER DATA: COGNIZANCE CODE	FEDERAL STOCK NUMBER	MFG. CODE (TSMC)
5W1-6-26-10		4									
5W1-6-27-10	117 - 2	4		M		O					
5W1-6-28-0		2									
5W1-6-58		1									
5W1-6-58-4	337 - 20	1									
5W1-9-10-8		4									
5W1-9-14	119 - 10	2									
5W1-9-21-12	117	2									
5W1-9-23-0		2		M		F					
5W1-9-26-0		2		M		F					
5W1-9-27-0		2									
5W1-9-27-6		2									
5W1-9-28-0		2		M		F					
5W1-9-28-7		2									
5W1-9-5-1		4									
5W1-9-5-6		4									
5000-118	109 - 3	2							R	5340-252-4740	GH80
5000-24		1									
5000-68-W	352A- 7	1									
	352A- 27	1									
	352A- 42	1									
5000-75WD	92 - 31	2							R	5340-252-4720	GH80
50013	321 - 57										
50013-1	217 - 3	1									
	321 - 57	1									
50024A-1S-.004	PG. 1004	1									
50032	204 - 11	1		P1	F	O	R		R	2995-037-2836	X110
	209										
	213 - 20										
	213 - 43										
	278 - 2										
									R	5950-041-3239	FPHI
										OR	
									R	4210-434-5195	G329
										OR	
									R	6115-500-2134	S210
										OR	
50032-1	204 - 12	1		P1	F	O	R		R	2995-606-3728	X110
	209										
	213										
	278	1									
5008-125	266 - 36	2									
500992		1		P1		O	C		R	4930-342-0085	Y120
5018-301	352 - 26	1		P1					R	1660-511-2715	Y120
5018-301-1	352 - 26	1									
50221	189 - 1	1							R	1650-288-6908	Y120
50222	135 - 46	1							R	2915-289-4239	Y120
	169										
									R	5355-093-6801	FPHI
										OR	
502535-1		1									
502536		1									
502537		1									
5050	270	11							R	5930-548-5311	D334
	271										
	300 - 25										
	301 - 20										
									R	5910-538-1301	E212
										OR	
									R	5945-259-6717	D334
										OR	
50841	344 - 12	16							R	5340-432-9936	GH80
	345 - 12										
	346 - 12										
5091		1									
51A2		14									
518359	231 - 13	1									
		1							R	5915-093-8105	D334
518367	231 - 15	2							R	5930-323-2175	D444
	231 - 16										
518381		1									
51C239-1	231 - 17	1							R	1680-532-7673	Y120
51C241	231	2							R	1560-373-8125	Y120
51C242-1	231 - 14	1							R	1600-C02-1823	Y120
51C3621		1									
51000	142 - 2	1		P1					R	1650-516-3445	A120
	225 - 80										
51067		1							R	2915-289-9532	Y120
51161		1									
511820-7	29 - 18	4							R	5310-094-3004	XGYR
511846-4	29 - 30	1							R	1630-218-8762	XGYR
5125-17		1									
516013	232	1							R	1660-326-0050	Y120
	350 - 53										
51750	334 -149	2									
518113		1							R	2915-098-3536	Y120
5190-527710	98 - 70	1		P1	F	O	C		R	1560-620-4517	A110
	113 - 28										
52-.048-250-1.375		1									
52-012-062.0468		1									
52-012-062-0250	92 - 11	1									
52-012-062-0375	46 - 7	1		M		O			R	5315-281-9477	GH80
52-012-062-0437	196 - 9	1									
52-012-062-0468		1									
52-012-062-0562	58 -128	1							R	5315-281-9453	GH80
52-012-078-0875		2							R	5315-598-8197	GH80
52-018-078-0875	203 - 1	2							R	5315-271-7464	GH80
	203 - 41										
52-018-078-0937	348 - 15	2									
52-018-078-1500	91	1									
52-022-094-0406		1									
52-022-094-0562	338 - 49	2							R	5315-271-7508	GH80
	339 - 86										
52-022-094-0625	203 - 19	2							R	5315-271-7510	GH80
52-022-094-0750	193 - 91	4							R	5315-271-7511	GH80

PART NUMBER	FIGURE AND INDEX	TOTAL QTY.	MICRO-FILM NUMBER	MAINTENANCE CODE DATA: SOURCE CODE	INST'L CAPABILITY	PRE-INST'L CAPABILITY	RECOVERABILITY	SUPPORT EQUIPMENT	FEDERAL STOCK NUMBER DATA: COGNIZANCE CODE	FEDERAL STOCK NUMBER	MFG. CODE (TSMC)
52-022-094-1.250	PG. 1007	1									
52-022-094-1250	PG. 1007	1									
52-029-125-0375		1									
52-028-125-0375	16	4							R	5315-238-1584	GH80
	45										
52-028-125-1000	196 - 84	2							R	5315-234-7457	GH80
52-028-125-1062		2							R	5315-597-2502	GH80
52-032-156-.000		1									
52-032-156-1.750		2									
52-032-156-1000	362	2									
52-032-156-2.000	141	2									
52-040-187-0500	30 - 53	2									
52-040-187-1500	333 - 98	2		P1							
	333 -101										
52-048-250-1.375	69 - 9	1							R	5315-240-1003	GH80
52-1050-02		11									
52-1065-02	340 - 13	11									
52-15718-064	14	2									
	15										
52-1650-02	80	11							R	5310-603-0447	G190
52-1650-048		1									
52A1-070		2		M		O					
52A1209	231	1							R	1680-028-1328	Y120
	296 - 21										
52C1543-24	PG. 1004	1									
52NA-070		1							R	5310-274-3248	G190
52NA-080		1									
52NA1-080		2									
52NA5-070	16	22									
	25										
52NA5-080	16	1									
52TE-064		4									
52001-61	141 - 3	1		P	F	O	S		R	1650-315-6181	Y120
521650-048		2									
525162-1	271 - 18	1		X1							
525202	175 - 1	1		P1	F	O	R		R	1680-601-0286	XAIR
	175 - 2										
	271 - 17										
	271 - 32										
5277-1		1							R	5935	
5278-1		1							R	5935	
5279-1		1							R	5935	
5280-1		1		P1	F	F	C		R	5935-601-0281	V170
5281-1		1							R	5935	
53-012-062-0325	331 - 17	16							R	5315-598-3009	GH80
	331 - 20										
53-012-062-0843	331 - 18	8							R	5315-598-3010	GH80
53-040-187-0625	331 - 16	8							R	5315-598-3010	GH80
53A3A911	235	1							R	6140-643-4825	D336
53038		1		P	F	O	S		R	2915-202-5766	Y120
53038-1		1		P1	F	O	S		R	2915-529-3911	Y120
53038-2	111 - 1	1		P1	F	O	S		R	2915-640-5623	Y120
532567	64	1							R	1620-098-1966	X110
532568	64	1							R	5120-288-5134	G750
532569	64 -103	1		P1	F	O	C		R	1620-098-1967	X110
53322	321 - 2	1							R	1600-C02-1601	Y120
	323 - 11										
534-B		1									
534-C		1									
534A		1									
534B	330	1									
534C	330	1									
53401	330 - 12	1									
53403	330 - 19	1							R	1610-448-4515	GHSC
53416	330 - 36	1							R	1560-150-2257	AGRA
53418	330 - 32	4									
53423	330 - 11	1							R	5935-323-1312	FWES
53424	330 - 10	1									
53451	330 - 22	1									
53457	330 - 15	1									
53460	330 - 17	1							R	5315-282-7275	PPWA
53461	330 - 16	4							R	1560-508-2783	AGRA
53468	330 - 14	1							R	1610-127-5904	GHSC
53470	330 - 18	1									
53472	330 - 13	1							R	6710-408-7325	JEKO
538038-2		1							R	2915-640-5623	Y120
54A3A-225-28-17P		1							R	5935-549-1090	D336
54A3A225-10SL3S		13							R	5935-636-7633	D336
54A3A225-10SL4S		10							R	5935-549-5140	D336
54A3A225-10S3S		1									
54A3A225-10S4S		1									
54A3A225-12S3P		1							R	5935-636-7604	D336
54A3A225-12S3S		5									
54A3A225-14-2S		1									
54A3A225-14S-6S		1									
54A3A225-14S2P		1		P1							
54A3A225-14S2S		8							R	5935-636-7623	D336
54A3A225-14S5P		3							R	5935-549-5143	D336
54A3A225-14S5S		12							R	5935-636-7627	D336
54A3A225-14S5SX		1		P1							
54A3A225-14S7S		1							R	5935-636-7630	D336
54A3A225-16-1P		1									
54A3A225-16-10S		1									
54A3A225-16-11S		4									
54A3A225-16S-5S		1									
54A3A225-16S-8S		1									
54A3A225-16S1P		1							R	5935-500-9955	D336
54A3A225-16S1S		2							R	5935-636-7631	D336
54A3A225-18-1P		2							R	5935-549-5141	D336
54A3A225-18-1S		1									
54A3A225-18-12P		2									
54A3A225-18-12S		1							P	5935-636-7620	D336
54A3A225-18-1S		2		P1							
54A3A225-18-20P		2									
54A3A225-18-9P		1							R	5935-636-7155	D336

PART NUMBER	FIGURE AND INDEX	TOTAL QTY.	MICRO-FILM NUMBER	MAINTENANCE CODE DATA: SOURCE CODE	INST'L CAPABILITY	PRE-INST'L CAPABILITY	RECOVERABILITY	SUPPORT EQUIPMENT	FEDERAL STOCK NUMBER DATA: COGNIZANCE CODE	FEDERAL STOCK NUMBER	MFG. CODE (TSMC)
54A3A225-18-9S		1		P1							
54A3A225-20-15S		1		P1							
54A3A225-20-16S		1							R	5935-636-7566	D336
54A3A225-20-18P		1									
54A3A225-20-18S		1		P1							
54A3A225-20-22P		2									
54A3A225-20-22S		3									
54A3A225-20-27P		5							R	5935-636-7563	D336
54A3A225-20-27S		12							R	5935-549-7340	D336
54A3A225-20-27S	336 - 18	1									
54A3A225-20-29P		1									
54A3A225-20-29S		1							R	5935-636-7564	D336
54A3A225-20-7S		1		P1							
54A3A225-22-14P		3									
54A3A225-22-14S		6							R	5935-636-7561	D336
54A3A225-22-14SX		2									
54A3A225-22-14SY		1									
54A3A225-24-20S		1									
54A3A225-24-28P		2							R	5935-636-7626	D336
54A3A225-24-28S		4							R	5935-636-7636	D336
54A3A225-28-11S		1							R	5935-642-3970	D336
54A3A225-28-11SW		1		P1							
54A3A225-28-11SX		1									
54A3A225-28-12P		1							R	5935-636-7609	D336
54A3A225-28-12PW		1									
54A3A225-28-12PX		1							R	5935-636-7574	D336
54A3A225-28-12S		6							R	5935-636-7637	D336
54A3A225-28-12SW		3							R	5935-636-7570	D336
54A3A225-28-12SX		3							R	5935-636-7603	D336
54A3A225-28-12SY		2							R	5935-636-7606	D336
54A3A225-28-12W		1							R	5935-636-7572	D336
54A3A225-28-15P		1									
54A3A225-28-15S		1							R	5935-636-7599	D336
54A3A225-28-16S		1							R	5935-636-7608	D336
54A3A225-28-16SW		1		P1							
54A3A225-28-17P		1									
54A3A225-28-21P		4							R	5935-636-7617	D336
54A3A225-28-21S		5							R	5935-636-7635	D336
54A3A225-28-21SX		1									
54A3A225-28-21SX		1									
54A3A225-28-9S		1							R	5935-636-7619	D336
54A3A225-32-13P		1		P1							
54A3A225-32-13S		1		P1							
54A3A225-32-6S		1							R	5945-636-7612	D336
54A3A225-32-7P		1							R	5935-636-7565	D336
54A3A225-36-7P		1							R	5900-C00-7713	D336
54A3A225-36-9P		1									
54A3A225-85-1P		1									
54A3A225-85-1S		1									
550120	350 - 59	1							R	4820-095-0817	Y120
550120-2		1							R	4820-318-1997	Y120
550120-5	292 - 6	1		P1	F	O	S		R	4820-318-1997	Y120
557600-501	64 -105	1		P1					R	1620-305-4084	X110
557612		1									
557645		1									
557692		1									
56A18D1	286 - 13	1									
567603		1									
56886		1									
569406	169 - 1	1							R	1650-288-6908	Y120
569408	135 - 46	1							R	2915-289-4239	Y120
	169										
57-M2		1		P1					R	5945-511-3538	D444
57J100	164 - 85	4							R	1650-566-4322	Y120
	165 - 78										
	357										
57J101	165 - 86	1									
57J102	164 - 94	1									
	165 - 87										
57J105	164 - 97	1									
	165 - 90										
57J301	164 - 93	1									
57J306	165 - 86	1									
57J500	164 - 86	1									
	165 - 79										
5821-428-17									R	5306-550-4608	ANAA
58648-F3X	284 - 71	1							R	5930-548-3940	D334
59-002-08975		1									
59-012-062-0325		1									
59-012-062-0375	189 -103	4							R	5315-276-4385	GH80
	209 - 17										
59-012-062-0437		4									
59-014-062-0625	PG. 1011	1									
59-014-062-0750	PG. 1011	3									
59-018-078-0437	204 - 55	1							R	5315-591-6889	GH80
59-018-078-0750	PG. 1010	1									
59-018-678-0750	PG. 1010	1									
59-022-08975		1									
59-022-094-0500	339 - 65	1							R	5315-240-0992	GH80
59-022-094-0750	205 - 1	2							R	5315-271-3004	GH80
59-022-094-750		4									
59-022-094-875		2									
59-028-125-0500	PG. 1005	1									
59-028-125-0594		1									
59-028-125-0687	339 - 64	2							R	5315-271-3002	GH80
59-028-125-1000	193 - 71	2									
59-028-125-1375	26 - 60	2									
59-040-187-050		1		M			O				
	46 - 15	1									
59-040-187-0562		2									
59-048-250-1.375		1									
59-552-1-5	113 - 28	1		P1							
59000-1		8							R	1650-098-2110	Y120
59000-6		8									
59009	352A- 3	2									

PART NUMBER	FIGURE AND INDEX	TOTAL QTY.	MICRO-FILM NUMBER	MAINTENANCE CODE DATA: SOURCE CODE	INST'L CAPABILITY	PRE-INST'L CAPABILITY	RECOVERABILITY	SUPPORT EQUIPMENT	FEDERAL STOCK NUMBER DATA: COGNIZANCE CODE	FEDERAL STOCK NUMBER	MFG. CODE (TSMC)
59011-F2X	352A- 39	2									
59015		1							R	5930-548-3341	D334
	352A- 17	1									
	352A- 24	1									
593307		4									
6-AD		4							R	4030-262-1573	GH80
6-2000	93	2							R	5310-432-5525	D334
	94										
	95										
	97										
6-2001	96 - 39	2		P1	F	O	C		R	2915-508-3817	Y120
	98										
	100										
	102 -131										
	103 -107										
	107 - 24										
	108 - 22										
6-2004	98 -119	1									
	99 -132										
	99 -149										
	106 - 6										
6-2400	93 - 19	2									
	94 - 13										
	95 - 18										
	95 -150										
	96 - 29										
	97 - 13										
	97 -148										
	110 - 19										
6-2404	104 - 31	1									
	105 - 40										
6-3200	110 - 2	1							R	2915-511-1852	Y120
	112 - 27										
6-3204	99 - 34	18		P1					R	2915-098-3532	Y120
	99 - 35										
	100 - 54										
	100 - 55										
6C-0147	328 - 20	44		P1	F	O	S		R	1005-325-5344	B210
	328 - 21										
6C-0154	328 - 20	4		P1					R	1005-325-5347	B210
	328 - 21										
6NBC914YZP	64 - 75	1		M		O					
6NCC1312YP	66 - 24	1		M		O			R	3110-227-2791	G730
6S56		4		P1							
6T1-10	234 - 30	1		M		F					
	235 - 30										
6T1-120		1									
6T1-132	234 - 31	1		M		F					
	235 - 31										
6T1-2-1/8	234 - 29	1									
6T1-6	235 - 29	1		M		F					
6WB06006-2	137 - 5	1									
600-001-1/2	119 - 35	2									
600-001-5/8	333 - 4	5									
	334 - 3										
	335 - 3	1									
	338 - 5										
	339 - 3										
600-001-7/16	16	2									
600-001-9/16	334 - 7	3									
	334 - 11										
	335 - 7	2									
	338 - 9										
	339 - 7										
	339 - 11										
	340 - 3										
600-015-Y405		4									
600-015-1/2		4									
600-015-1/4	16	794							R	5300-C04-4507	GB90
	95 - 97										
	96 - 27										
	96 - 28										
	97 -100										
	98 - 44										
	99 - 49										
	99 - 61										
	99 - 71										
	100 - 87										
	100 -151										
	101 - 52										
	101 - 84										
	103 - 42										
	103 - 80										
	103 -127										
	103 -182										
600-015-1/4-OS	16 - 4	117									
	16 - 61										
	16 - 70										
	16 - 74										
	16 -173										
	100 -140										
	102 - 30										
	102 - 92										
	102 -119										
	103 - 30										
	109 - 10										
600-015-1/40S	113										
600-015-3/8	16	6							R	5330-202-3863	GB90
600-015-5/16	16	16							R	5330-202-1259	GB90
600-015-5/16-OS	16	10									
600-015-7/16	16	14							R	5930-202-1254	GB90
600-015X1/2	17	2									
600-015X3/8	17	3									
600-015X5/16	17	1									
600-042-04375	337 - 8	1									

PART NUMBER	FIGURE AND INDEX	TOTAL QTY.	MICRO-FILM NUMBER	MAINTENANCE CODE DATA: SOURCE CODE	INST'L CAPABILITY	PRE-INST'L CAPABILITY	RECOVERABILITY	SUPPORT EQUIPMENT	FEDERAL STOCK NUMBER DATA: COGNIZANCE CODE	FEDERAL STOCK NUMBER	MFG. CODE (TSMC)
600-042-1/2	337 - 4	2									
	349 - 7										
600-042-7/16	349 - 3										
6000	241 - 68	2									
6000-24-11	96	1									
	102										
	103										
6001	241 - 30	4							R	1680-546-0902	X110
	241 - 51	4									
									R	6615-663-8267 OR	YCED
6006-6-25		2							R	4730-305-2966	G260
601402-16-0182	355 - 68										
601402-160-0182	137 - 11	1									
	PG. 1021										
6042H58	285A- 65	1									
	287A- 19										
6043-2-2-3	89 - 45	4									
6043-3-3-10	78 - 29	2							R	6150-279-5651	D336
6043-3-3-7	78 - 34	1							R	6150-501-7184	D336
6043-3-3-8		2									
607730		1									
6080		1									
6087D4	104	4									
	105										
	122 - 3										
	123										
	125 - 1										
	136 - 1										
	137 - 1										
	355										
61N11		1		P1					R	5935-170-8139	B336
610440		1		P2					R	2840-611-1768	PWAC
610539N3		1		P1					R	2840-608-5981	PWAC
6124	101 - 31	1		P1					E	6750-242-4793	J350
	102										
									E	6710-297-1650 OR	J8EH
6131		1							R	1650	
6143A-2-3-12		1									
6143A-3-3-20	92 - 15	1									
	92 - 22										
6143A3-3-20		2									
62-15718-064		1									
6215	140 - 26	1							R	6710-356-6185	J8EH
									R	4820-032-8560 OR	Y120
6227-21		2									
63316	317 - 1	2							R	5325-281-8640	GH80
	318 - 68										
645-101	253 - 6	1									
645-93	285 - 9	1		P1	F	O	C		R	5945-612-3171	D336
	285 - 10										
	285 - 11										
	285 - 78										
	285 - 82										
	287 - 33										
65WB06006	137	1		P1	F	O	R		R	1650-605-4416	ZNY8
	355 - 66										
	PG. 1021										
65WB06006-1	137	1									
	355 - 66										
	PG. 1021										
65WB06006-2	137 - 5	1									
	355										
	PG. 1021										
650-1730	284 - 7	1		P1					R	5945-501-8685	D444
	285 - 76										
	287 - 27										
650-1795	258 - 5	1							R	5945-259-4351	D444
	288 - 7										
650-4063	284 - 4	9		P1					R	5945-257-6925	D334
	285 - 9										
	285 - 10										
	285 - 11										
	285 - 76										
	285 - 82										
	287 - 33										
650-4269	284 - 5	2		P1					R	5945-522-6633	D444
	285 - 80										
	285 - 83										
	287 - 31										
	287 - 35										
650-4487		1									
650-51		1									
650-53		1									
6500D6	125 - 18	2							R	1650-313-5985	GB90
6502D6		1									
6506E6		2							R	4730-305-1504	GB90
6506F6		1									
651H-8		2									
6520D6	123 - 17	2							R	4730-595-1230	G260
	125 - 18										
6520N45C6	122 - 19	1							R	4730-620-6061	G250
	123 - 17										
	125 - 18										
6526K6	124 -104	2							R	4730-520-2101	G260
	126 - 68										
	127 - 85										
6526M45C6	124 -104	1							R	4730-620-4136	G250
	126 - 68										
	127 - 85										
65838-F2X	284 - 68	1									
66WT200		1		P1	F	O	R				
66WT200-1	136 - 18	1		P1	F	O	R		R	1650-524-9429	ZNY8

PART NUMBER	FIGURE AND INDEX	TOTAL QTY.	MICRO-FILM NUMBER	MAINTENANCE CODE DATA: SOURCE CODE	INST'L CAPABILITY	PRE-INST'L CAPABILITY	RECOVERABILITY	SUPPORT EQUIPMENT	FEDERAL STOCK NUMBER DATA: COGNIZANCE CODE	FEDERAL STOCK NUMBER	MFG. CODE (TSMC)
	PG. 1021										
	PG. 1027										
66WT200-2	355 - 55	1									
8600-048		2									
6600-054		2									
8600D07C		4									
6600EW	78	4									
6600EW-048		8									
6600EW108		4									
66005-02		1									
6600502		1							R	5310-515-9196	G190
6653D00000		2									
66752	213 - 69	1							R	5900-C03-0367	E222
68C3-02		14									
6800-02	39	3							R	5310-596-7231	G190
6800-048	39	29		M		O			R	5310-433-1513	G190
6800-054	89	16									
6800-064	89	12									
6800-070	89	2									
6800-080		1									
68005-048		4									
68008-048	45	4									
6810-064	48 - 8	1							R	5310-596-7198	G190
6815-24		2									
6820-02	44	1							R	5310-273-7816	G190
69-0101-2	39 - 85	2							R	5340-333-4301	GH80
6900	123 - 84	1									
6902	123 - 85	2									
6903	123	1									
6904	123 - 89	2									
6905	123 - 88	2									
6906	123 - 86	2									
6907	123 - 87	2									
6950-S-06-10	6 - 34	1									
6950-S-06-3	79 - 6	7							R	5320-515-9192	G190
6950-S-06-4	13 - 85	2									
6950-S-06-7	6 - 14	1									
6950-S-08-6	15 -308	90									
	15 -310										
6951-S-06-3	79 - 7	5							R	5320-205-7429	G190
6951-S-08-6	15 -309	26									
6952-1K0	274 - 23	2							R	5340-200-3804	GH80
7-3150-77		1									
7-653-106		1							R	1680-698-5479	Y120
7-653-171-1	121 - 16	1							R	2915-324-8760	Y120
7-653-35-2		1									
7-70205	103 - 98								R	2915-590-7465	Y120
	220 - 17										
7E28-9		1		M		O					
7E28A-39	269A- 41	1									
7NBC1015YZP	45 -136	2							R	3110-227-2804	
7R2-10D		3		P	F	O	C		R	1560-048-2550	ANAA
7R2-7D	147 - 11	5		P					R	5340-438-0444	ANAA
	161 - 10										
7R3-10D	160 - 14	3		P	F	O	C				
7R3-7D	147 - 14	5		P							
	161 - 13										
7R4-10D	141 - 59	2		M		O					
7R4-11D	146 - 6	2		M		O					
7R4-12D	143 - 34	2		M		O					
7R4-13D		1		M		O					
7R4-18D	157 - 20	2		M		O					
	166 - 13										
	167 - 9										
7R4-19D	145 - 21	5		M		F					
	149 - 22										
7R4-22D	84 - 7	2		M		O					
	131 - 32										
7R5	195	3									
	203 - 23										
7S13/1032-14	359 - 6	1									
7S13-1032-13		1		P	F	O	C		R	5305-281-5212	G192
7S13-1032-14		2		P					R	5305-215-6429	G190
7S13-1032-19A	13 -143	1									
	112										
7S13-1032-20A	13 -133	1									
	112										
7S13-1032-8A	13 -136	3							P	5305-094-7028	ANAA
	13 -146										
7S13-428-22	6 - 20	1									
7S13-428-62A	361 - 35	1									
7S13-428-9A		6									
7S13-632-12A	341 - 32	2									
7S13-632-4A	341 - 1	10									
7S13-632-7A	341 - 36	6							R	5305-206-8653	G190
7S13-832-4A		4									
7S13-832-8A		2									
7S13CN5832-8A	261	4							R	5305-530-9185	G190
7S13CN10-14	3 - 2	8		P							
	3 - 5										
	3 - 8										
	3 - 14										
	357										
7S13CN1032-13A	317	2		P							
	318										
7S13CN1032-8A	317	2									
7S13CN632-12A	317	1									
	318										
7S13CN632-4A	315 - 26	2									
	318										
7S13CN632-5A	317	4		P							
	318										
7S13CN632-6A		2									
7S13CN632-7A	251	6		P					R	5305-206-9198	G190
	315										
	318										
7S13CN832	274 - 8	4									
7S13CN832-12A		1							R	5305-	
7S13CN832-4A	31E	2									
7S13CN832-8A	218	4		P	F	O	C		R	5305-530-9185	G190
	224										
	234										
	235										
	251										
	259										
	260										
	288										
	292										
7S13CU632-7A		2									
7S14-1032-10	356 - 16	3							R	5305-297-8185	G192
7S14-1032-12	356 - 12	2							R	5305-226-9587	G192
7S14-1032-24A	219 - 51	2		P	F	O	C				
7S14-1032-45A	PG. 1004	2									
7S14-1032-6A		7							R	5305-281-1738	G192
7S14-1032-8	356 - 19	6		P					R	5305-207-5207	G190
7S14-1032-8A		7		P	F	O	C		R	5305-207-6211	G190
7S14-1032-824	PG. 1005	1									
7S14-1032-9A		16		P		O	C		R	5305-214-0345	ANAA
7S14-4-40-7A		4									
7S14-428-14A		2									
7S14-428-6A	PG. 1008	1									
7S14-428-8A	219 - 55	2		P	F	O	C		R	5305-206-9197	G190
7S14-440-7A		4									
7S14-632-10A		2									
7S14-632-16A		25							R	5305-206-8655	G190
7S14-632-17A		6							R	5305-206-0888	G190
7S14-632-22A		3							R	5305-207-7787	G190
7S14-632-26A		4							R	5305-206-0889	G190
7S14-632-34A	189 - 67	1							R	5305-515-9872	G190
7S14-632-39A	189 - 71	1							R	5305-527-4517	G190
7S14-832-11A	284 - 50	2									
7S14-832-4A		6									
7S14-832-8		3									
7S14-832-8A	270	4		P					R	5305-214-0346	G190
	322										
	326										
7S14-832-9A	270	8									
7S14-8329A		8									
7S14CN1032		4		P	F	O	C				
7S14CN1032-10A	52 - 67	18		P	F	O	C				
7S14CN1032-12	50	4									
7S14CN1032-12A	274 - 11	19		P	F	O	C				
	356 - 25										
7S14CN1032-14A	356	5		P	F	O	C				
7S14CN1032-15A	357	2									
7S14CN1032-16A	357	3									
7S14CN1032-19A	357	1									
7S14CN1032-8A		16		P	F	O	C		R	5305-226-9583	G192
7S14CN1032-9A		2									
7S14CN428-12	50	2		P							
7S14CN632-10A	274 - 17	4		P							
	318										
7S14CN632-12A	270 - 71	4		P							
7S14CN632-13A		7									
7S14CN632-14A	232	21									
	315										
	318										
7S14CN632-14S		6									
7S14CN632-15A		29									
7S14CN632-16A	315 - 62	25		P					R	5305-206-8655	G190
	315 - 75										
	318										
7S14CN632-17A	315	6		P					R	5305-206-9200	G190
	318										
7S14CN632-18A	318	4									
7S14CN632-22A	315 - 63	3		P					R	5305-207-7787	G190
	318										
7S14CN632-24A		4									
7S14CN632-26A	315 - 77	4		P					R	5305-206-9201	G190
7S14CN632-4A		5									
7S14CN632-6A		3									
7S14CN632-7A	274	5		P							
7S14CN632-8A	276	4		P	F	O	C		R	5305-208-0804	G190
	315										
7S14CN832-10A		4		P							
7S14CN832-8		1									
7S14C1428-12		2									
7S15-10-11	79 - 4	28									
	79 - 9										
7S15-10-12	79 - 11	24		P1	F	O	C				
7S15-10-13	79 - 3	4									
	349 - 9										
7S15-10-14	79 - 8	68		P1	F	O	C				
7S15-10-15	337 - 12	2									
7S15-10-16		4		P1	F	O	C				
7S15-10-17		2		P1	F	O	C				
7S15-10-18	79 - 13	12		P1	F	O	C				
7S15-10-20	79 - 14	2		P1	F	O	C				
7S15-10-21		1							R	5305-274-0568	G192
7S15-10-24	334 -211	6									
7S15-10-47	340 - 14	11									
7S15-10-7	74 - 4	3									
	74 - 5										
7S15-10-8	74 - 2	16									
	74 - 3										
	74 - 7										
	335 - 47	3									
	347 - 19										
	347 - 26										
	347 - 38										

PART NUMBER	FIGURE AND INDEX	TOTAL QTY.	MICRO-FILM NUMBER	MAINTENANCE CODE DATA: SOURCE CODE	INST'L CAPABILITY	PRE-INST'L CAPABILITY	RECOVERABILITY	SUPPORT EQUIPMENT	FEDERAL STOCK NUMBER DATA: COGNIZANCE CODE	FEDERAL STOCK NUMBER	MFG. CODE (TSMC)
	348 - 26										
	348 - 54										
7S15-10R8	269 - 29	9									
7S15-416-11	340 - 12	4									
7S15-416-16	79 - 12	32		P1	F	O	C				
7S15-416-18	198 -112	1									
7S15-416-19		4		P1	F	O	C				
7S15-416-20		1									
7S15-416-9	340 - 15	4									
7S15-516-15	79 - 10	6		P1	F	O	C				
7S15-8-10		1									
7S15-8-11	71	2									
7S15-8-8		2									
7S15-8R8	335 - 38	5									
7S16-1032-7A		4									
7S16-25	15	2									
7S16-5-25		1							R	5305-206-8449	G190
7S16-8-23	15	8		P					R	5305-559-0911	G192
7S16-8-24	15	8		P					R	5305-639-1967	G190
7S16-8-25	15	4							R	5306-206-8449	G190
7S16CN10-12	50 - 29	84		P							
	50 - 34										
7S16CN10-13	3 - 11	7		P							
	50 - 7										
	50 - 36										
	357										
7S16CN10-14		2		P							
7S16CN10-16	52	19		P							
	55 - 33										
	57 - 55										
	57A- 26										
7S16CN10-7	3 - 10	36		P							
	357										
7S16CN10-8	3 - 1	131		P					R	5305-226-9584	G192
	3 - 7										
	3 - 19										
	4 - 2										
	50 - 2										
	357										
7S16CN416-12	52 - 6	4		P							
7S21-10-13		1									
7S21-10-15	330	7									
7S21-10-18	330	4									
7S27-10-11	7 - 11	2									
7S27-10-12	6 - 3	1									
	172 -134	1									
7S27-10-13	6 - 4	1									
	172 -136	1									
7S27-10-16	6 - 5	6							R	5305-559-0908	G192
	172 -135	2									
	173 - 78										
	173 - 81										
7S28-4-14	189 - 90	1									
7S28782-31		2									
7S29-10-7	21	4									
7S29-10-7A	21 - 89	4									
	21 -110										
7S29-10A-5	9 - 44	1									
7S29-10A12	17 - 45	2									
7S29-10A5	10 - 89	64									
	10 - 90										
	10 - 92										
	10 - 93										
	10 - 94										
	10 - 95										
	10 - 96										
	10 - 97										
7S29-416-10	176 - 76	6									
7S29-416-3		4									
7S29-416A-3		2									
7S29-416A3	10 - 79	2							R	5305-589-8408	G192
	10 - 80										
7S29-416A9	175 - 41	1									
7S29-516-6	176 - 69	2									
7S29-616-11	21	4									
7S4-632-26A		1							R	5305-	
70C175		1							R	5950-648-7167	DGEC
70G175	215 - 8	1							R	5950-648-7167	DGEC
	216 - 8										
	248										
	294										
	314 - 67										
70LHA5-02		1							R	5310-550-0688	G190
700H24	101	1									
7000D24-15	96	1									
	102										
	103										
7000H20K		1							R	5300-C04-3858	GB90
7000H24	96	1		P1					R	5300-C04-3860	GB90
	102 - 44										
	103 - 26										
70005-24-2	96	1									
7001-J	270 - 26	4							R	5340-091-1226	F642
	270 - 56										
7001-K	276 - 10	4									
7001K		4		M		O			R	5340-200-7699	GH80
7002M	274 - 28	2							R	5340-329-1333	GH80
7005-24-2	102	1									
	103										
7005D20K		1									
7005D24	96 - 40	1							R	4730-288-8787	G260
	102 -140										
	103 -135										
	358										
7014CN632-10A	317	1									

PART NUMBER	FIGURE AND INDEX	TOTAL QTY.	MICRO-FILM NUMBER	MAINTENANCE CODE DATA: SOURCE CODE	INST'L CAPABILITY	PRE-INST'L CAPABILITY	RECOVERABILITY	SUPPORT EQUIPMENT	FEDERAL STOCK NUMBER DATA: COGNIZANCE CODE	FEDERAL STOCK NUMBER	MFG. CODE (TSMC)
7046-4513	285A- 69	1									
7064-208	249	1		P1	F	O	C		R	5945-230-7738	D334
	250										
	285 - 79										
	287 - 37										
	308 - 24										
	308 - 25										
	309 - 21										
	309 - 22										
7064-4513	287A- 22	1									
7084-208		1									
711AC-039-08		1									
711AD-039-08	178 - 29	1									
72-022-094-0437	316 - 41	1									
72-028-125-0937	30 - 82	2									
7265K10	284A- 20	1									
730100-1	349 - 68	1		P1	F	O	S		R	2915-656-4423	Y120
737-54-8		1							R	5340-597-9134	GH80
737-57-8		1							R	5340-597-9133	GH80
738-54-8		1									
738-57-8		1									
738-69-8		1							R	5340-597-9135	GH80
7385-41-6		2									
7385-41-8	356 - 11	2									
7385A1-6		2									
74-1320	331 - 26	4							R	1005-348-1595	B210
74164		1							R	3110-159-1719	
75-1-282		1									
75024		1									
7512	241 - 21	1							R	5305-033-2122	Z150
755-12-2-8	353	1							R	5975-513-2389	D336
									R	5340-221-3029 OR	GH80
755-3-2-6	353	5									
755-4-2-6		1									
7694K3	300 - 24	1									
7664K3	270	1							R	5930-548-9669	D334
	271										
	301 - 19										
7684K3		1									
77M1P-8T	311 - 36	8									
	312 - 4										
77M1P8T		8									
77V-6-48		1									
77V-8-48		1									
7800	334 - 53	1									
79-012-062-0312		1							R	5315-282-1949	GH80
79-012-062-0375	30 - 28	2							R	5315-234-7461	GH80
79-012-062-0500	112 - 48	2									
79-012-062-0750	193 - 13	1									
79-012-062-1000	58 - 39	2							R	5315-598-9930	GH80
79-014-062-0500		4									
79-022-094-0437		2							R	5315-598-7286	GH80
79-022-094-0937		2							R	5315-058-9738	GH80
79-022-094-1000	47 - 21	1									
79-022-94-0937	117 - 33	2									
79-028-125-.0312	361 - 5	1									
79-028-125-.0500	361 - 12	1									
79-028-125-.0781	361 - 20	1									
79-028-125-0500	16	8							R	5315-058-9746	GH80
	58 -151										
	112 - 25										
79-028-125-0566	328 - 12	8							R	5315-058-9747	GH80
79-028-125-0625	112 - 23	2							R	5315-058-9748	GH80
	334 - 88										
79-028-125-0750	328 - 8	8		M		O			R	5315-058-9750	GH80
79-028-125-0875		4									
79-028-125-1.625	369 - 45	1									
79-028-125-1500	45 - 69	2									
79-028-125-1750		1		M		O					
79-040-1125		3									
79-040-187-1125	30 - 23	2		M		O			R	5315-058-9787	GH80
	338 - 91										
	339 - 33										
79-048-250-1250	26 - 15	2									
79-1669-1-02	50 - 32	56							R	5306-275-0720	G190
79-1669-2-02	50 - 30	20							R	5310-586-6470	G190
79-1669-3-02	50 - 27	8							R	5310-596-6469	G190
79-1669-4-02	50 - 37	4							R	5310-275-0718	G190
79A1-82		8									
79NA21-79-02	4	124							R	5310-595-7265	G190
79NA38-02	3	180									
79XZ6-4		1							R	5305-638-9998	G192
790-2-5-6		5									
790-2E6		5									
7904B4003-2	52	1									
8-1100		1							R	2915-554-7605	Y120
8-1400	94 - 73	1							R	2915-601-0279	Y120
	229 - 13										
8-210N2C	356	1							R	4730-305-2967	G260
8-510N1C		1									
8-510N1C	356	1							R	4730-305-2968	G260
8C10	234 - 28	1		P1	F	O	C		R	1560-602-0769	ANAA
	235 - 28										
8C3-1-051		1									
8C4-3	225 - 72	1									
8C5	234 - 28	1		P1					R	1560-199-8317	ANAA
	235 - 28										
8C7-8-1		1		M		O					
8C7A-6-36		1		M		F					
8C7A10-60		1		M		F					
8C7A10-9		1		M		F					
8C7A6S10		2									
8C7A8-10		1		M		F					
8C7A8-12		2									

PART NUMBER	FIGURE AND INDEX	TOTAL QTY.	MICRO-FILM NUMBER	MAINTENANCE CODE DATA: SOURCE CODE	INSTL CAPABILITY	PRE-INSTL CAPABILITY	RECOVERABILITY	SUPPORT EQUIPMENT	FEDERAL STOCK NUMBER DATA: COGNIZANCE CODE	FEDERAL STOCK NUMBER	MFG. CODE (TSMC)
8C7A8-3L		1		M		F					
8C7B-10-22		1		M		F					
8C7B-10-4		2		M		O					
8C7B-10-9		1		M		F					
8C7B-6-30		1		M		O					
8C7B-7-6		2		M		F					
8C7B-8-11		1		M		F					
8C7B10-11		1		M		O					
8C7B10-28		1		M		O					
8C7B10-35 1/2		1		M		O					
8C7B10-6		1									
8C7B10-61/2		1		M		O					
8C7B10-8		1		M		F					
8C7B13-72		1		M		O					
8C7B2-6		1									
8C7B3-30		1									
8C7B4-19		1									
8C7B4-9		1									
8C7B7-40		2		M		F					
8C7B7-6		1									
8C7B8-18		1									
8C7B8-22		1		M		F					
8C7B8-9		1		M		F					
8C8		1									
8DJ5GBH-4		1									
8DJ51GB-4		1									
8DJ51GBE-4	260 315 318 - 19	3							R	6610-514-6161	V170
8DJ51GBE-4	243 - 11 244 - 9 315 - 26 318 - 20	1							R	6610-514-6165	V170
8DJ51GBF-4	278 - 36 278 - 37 318 - 5 318 - 8	2							R	6610-390-8453	V170
8DJ51GBH-4	270 271 - 51 315 - 13	1							R	6610-514-6164	V170
8DJ51GBL-4	273 315 318 - 21	1		P1	F	O	S		R	6685-515-4587	V170
8DJ516BH-4		1									
8NCC1416YP	45 - 83	1									
8NCC1416YP2C		2							R	3110-227-2598	G730
800-501-1/4	118	2									
80092	279 - 31	1							P	2810-165-6034 OR	PPWA
		1							R	6150-315-3841	D446
80093	279 - 33	1									
		1							R	6150-315-3842	D446
80094	279 - 32	1									
		1							P	6150-315-3843	D446
801514		8							R	1650-373-8144	Y120
80297-11	351 - 22	1									
809-2	255 - 14 255 - 30 255 - 37 255 - 44 273 - 10 276 - 18 355 PG. 1016	4							R	5340-200-3806	GH80
809060	242 - 15	2							R	6340-300-5426	D444
809120	242 - 14	9		P1					P	6340-640-8192	D444
									R	1680-640-8192 OR	D444
8102A	47 - 56	8									
8110		1							R	4820-032-8562	Y120
81300	351	1							R	4130-214-5752	Y120
8177		1							R	1650-602-3815	Y120
82A19	185 - 35	1							R	3020-203-2010	GH80
82R100	139 - 25	1		P1					P	1650-546-3911	Y120
820-1/6	323	2									
820-16	321	2							P	4730-488-5907	GH80
									P	5330-032-8196 OR	Y120
									R	4730-488-5902 OR	GH80
820-22		2									
83081	111 - 3	1							P	2810-168-6425	SWAC
83198	350 - 3	1							R	4130-214-5776	Y120
									R	2840-037-7049 OR	PPWA
	351 - 15										
83501-1	107 - 32 108 - 26 111 - 2	2		P1	F	O	S		P	5710-370-9041	Y120
									R	1610-212-8755 OR	S160
840301	321 - 41 323 - 37	1							P	4820-095-2056	Y120
840358		8							P	1650-396-8883	Y120
840482	321 - 46 323	2		P1	F	O	C		P	1680-390-6952	Y120
840499	321 - 28 324 - 17 325 - 6	2		P1					P	1650-523-7724	Y120
									P	5310-441-6342 OR	ZECP
									P	1650-530-5192 OR	G500
840583		4									
840598		5									
840649		4									
840716	321 - 44 323 - 36	1		P1					R	1680-028-1334	Y120
840745	242 - 20	58		M		O			R	6340-300-3628	D446
840746	242 - 19 356	76							R	6340-300-3629	D446
840747	242 - 18	32		M		O			R	6340-300-3630	D446
840748	356	5		M		O			R	6340-300-3630	D446
840769		4									
840770		4									
840771	242 - 13	3							R	5935-539-0253	D334
840791	242 - 16	4							R	5935-539-0251	D334
840838		4							R	5935-575-2975	D336
840839		4									
85193A	189 -108 294 - 1	1									
859A-6BB	93 - 80 94 - 79	1							R	4820-142-2978	G250
859A-8TT	93 - 38 94 - 37	1							R	4820-142-2979	G250
860-015-3/32-17/32		8									
860-015-3/32-3/16		16									
860-015-3/32-3/4		16									
860-015-3/32-3/8		82									
860-015-3/32-5/8		8									
860-015-3/32-7/16		36									
860-015-3/32-7/8		32							R	5320-205-7915	
860-015-7/8	16	8									
860-515-3/32-9/32	18	4							R	5320-576-0269	G191
861447A		1							R	5945-502-2897	D334
862536	328	2									
8701		1									
870400	324 - 9	1		P1					R	1650-219-2499	Y120
870420	321 - 32	1							R	8120	
870449	217 - 4 321 - 51	1									
870499	323 - 46	1									
870538	322 - 85	2							R	8120-664-5376	G500
870629	134 - 88 135	1							R	4210-370-4215	Y120
870838		2		P1					R	1650-527-2893	G500
8710.9		2									
871115	242 - 12	1							R	6340-300-5427	D444
871302	251 - 33 321	2		P1					R	1650-516-3477	Y120
871315	242 - 5	1							R	6340-341-4295	D444
871351	217 - 4 218 - 17 321 - 51 323 - 46	4		P1	F	O	R		R	1650-505-8529	Y120
871399		2							R	6680-028-1335	Y120
8730-517251	93 94 95 97	2							R	2915-286-9398	NPAC
87400	325 - 8	1									
8747K3	296 - 12	1							R	5930-548-4322	D334
8747K4	231 296 - 12	1							R	5930-535-8216	D334
875337		1									
8770449		1									
8775K8	213 - 18 216 - 12 305 - 16 306 - 20	1							R	5930-501-0978	D334
									R	5930-259-7303 OR	D334
877598		1									
88-16081-1		1							R	1560-563-2683	ANAA
8802K10		1							R	5930-518-1642	D334
8810K6		1							R	5930-548-5130	D334
8812K13		1							R	5930-548-5129	D334
8857K19	270 - 69	1							P	5930-504-9363	D334
8858K12		1									
8858K18	284A- 19	3									
8858K7	263 315 - 6	1									
8859K12		1									
8859K7	263 265 - 12 301 - 23 315 - 7	1							R	5930-504-9041	D334
88729		1									
8875K8		1									
8905K780	234 235 249 250 - 5 279 305 - 17 306 - 21 313 - 5	2							R	5930-522-6662	D444
8905K838	243 - 6	1							R	5930-646-5042	D334
89120		8									
89153A	294	1									
89372	35	1									
895K780		1									
9-10831	230	1		P1	F	O	C		R	5930-449-1104	D334
9-2500		1									
9AT4		1									
9C-1-6		1									
9C1-1-2		2		M		F					
9C1-1-3	71 78	4		M		F					

PART NUMBER	FIGURE AND INDEX	TOTAL QTY.	MICRO-FILM NUMBER	MAINTENANCE CODE DATA: SOURCE CODE	INST'L CAPABILITY	PRE-INST'L CAPABILITY	RECOVERABILITY	SUPPORT EQUIPMENT	FEDERAL STOCK NUMBER DATA: COGNIZANCE CODE	FEDERAL STOCK NUMBER	MFG. CODE (TSMC)
9C1-1-4	71	1		M		F					
9C1-1-5	351	2		M		F					
9C1-1-6	48 - 2	1									
9C1-1-7		1		M		F					
9C1-2-12	355 -220	3		M		F					
	362A										
	364										
	PG. 1007										
	PG. 1018										
	PG. 1024										
9C1-2-2-1/2	41 - 71	4		M		O					
9C1-2-3	3	9		M		O					
	10 - 10										
	10 - 59										
	71										
9C1-2-4	39	1		M		F					
	363										
9C1-2-5	9	9		M		F					
	10 - 55	1									
	33										
	71										
	74										
	95										
	97										
	333 - 81										
	355										
9C1-2-6	269A- 38	1									
	PG. 1007										
	351	1		M		F					
9C1-2-7	3	1									
	10 - 6	1									
	334 - 31										
	351										
	365										
	PG. 1007										
9C1-2-8	39 - 98	2									
	335 - 76										
	363										
9C1-2-9	362	2									
9C1-3		1									
9C1-3-10	PG. 1008	1									
9C1-3-12	360 - 3	1									
	PG. 1003										
9C1-3-15	PG. 1008	1									
9C1-3-2	9 - 40	12		M		O					
	PG. 1008										
9C1-3-2-1/2		4									
9C1-3-3	10 - 28	9		M		F					
	10 - 33										
	10 - 39										
	10 -102										
	10 -103										
	10 -110										
	10 -115										
	10 -123										
	44 - 87										
	71										
	122										
	212										
	321										
9C1-3-4	9 - 33	2									
9C1-3-5	71	3									
	74										
	PG. 1008										
	212										
9C1-3-6	71	12									
9C1-3-7	339 - 31	3									
	360 - 27										
	365										
	366										
9C1-3-8		1									
9C1-3-9	366	2									
9E1-2-4		1		M		O					
9E1-64-14	PG. 1005	1									
9S-5-150	97	1									
9SP100A6-13		30									
9T39Y5	215 - 8	1									
	216 - 8										
	248										
	294										
	314 - 66										
	319 - 57										
90	122 - 17	40							R	5340-565-4035	GH80
	209 - 39										
	211										
	211	1									
	212 - 15										
	213 - 19										
	213 - 46										
	215										
	218 - 13										
	221										
									R	5120-541-0918 OR	HFZA
									R	5925-173-7160 OR	D334
									R	5940-315-3905 OR	D444
	222 - 1										
	224 - 17										
	314 - 15										
	314 - 16										
	314 - 18										
	314 - 20										
	314 - 21										

PART NUMBER	FIGURE AND INDEX	TOTAL QTY.	MICRO-FILM NUMBER	MAINTENANCE CODE DATA: SOURCE CODE	INST'L CAPABILITY	PRE-INST'L CAPABILITY	RECOVERABILITY	SUPPORT EQUIPMENT	FEDERAL STOCK NUMBER DATA: COGNIZANCE CODE	FEDERAL STOCK NUMBER	MFG. CODE (TSMC)
	314 - 22										
	314 - 23										
	314 - 26										
	314 - 27										
	314 - 28										
	314 - 30										
90000-1		1							R	5930-258-5576	V170
90000-12	123 - 52	2									
	245 - 8										
	245 - 10										
	288 - 13										
90000-2	123 - 51	4							R	5930-258-5577	V170
	124 - 47										
	125 - 41	1									
	126 - 44										
	127 - 44										
	245 - 6										
	245 - 7										
	245 - 9										
	245 - 11										
	288 - 11										
									R	1720-142-3197 OR	KCAG
900028	354 - 20	1									
900031	354 - 23	1									
900041	354 - 8	1									
900045	354 - 38	1									
900051	354 - 28	1							R	5305-095-2330	N140
900060	354 - 4	4									
	354 - 30										
900061	354 - 22	5									
	354 - 27										
900066	354 - 31	1									
900067	354 - 24	1									
900072	354 - 33	1									
900073	354 - 34	1									
900075	354	1									
900077	354 - 48	1									
900078	354 - 42	1									
900081	354 - 35	1									
900084	354	1									
900085	354 - 46	1									
900086	354 - 47	1									
900087	354	1									
900088	354 - 41	1									
900089	354	2									
900090	354 - 43	2									
900091	354	1									
900092	354 - 44	1									
900093	354 - 45	1									
900095	352 - 2	1									
	354										
900187	352	1									
	354 - 15										
900188	354	1									
900189	354	1									
900191	354	1									
900198	354 - 9	1							R	1660-559-5662	Y120
900587	354 - 13	1									
900591	354	1									
900592	354	1									
900593	354	1									
900594	354	1									
90060		1									
901-2	214 - 7	13									
	303 - 28										
	304 - 37										
	314 - 59	1									
	319 - 49	1									
901378	354 - 19	1									
9017		4							R	1005-521-0954	B210
902-375	355 - 17	1									
902-375-2	352	1		M		O					
9021-1	328 - 18	9		P1					R	1005-091-7680	B210
	328 - 19										
9021-2	328	9		P1					R	1005-091-7681	B210
9029-1	328 - 18	2		P1					R	1025-313-8235	B210
	328 - 19										
9029-2	328	2		P1					R	1025-313-8370	B210
903-12	214 - 9	13									
	303 - 30										
	304 - 39										
	314 - 61	1									
	319 - 51										
903-26	284 - 29	1									
9032		1									
9033		1									
9038	140 - 24	1							R	4820-032-8564	Y120
									R	5945-257-2072 OR	D444
9039-37N	228 - 4	2		P1	F	O	C		R	5945-642-3723	D334
	228 - 5										
905-3	214 - 8	13									
	303 - 29										
	304 - 38										
	314 - 60										
	319 - 50										
90500-4	218 - 15	2		P1					R	5930-548-6740	V170
	218 - 16										
	322										
									R	5930-669-8492 OR	V170
9057		1		P1					R	5945-502-6642	D334
9057-48E		1									
9057-48F	230 - 19	12							R	5945-204-9654	D444

PART NUMBER	FIGURE AND INDEX	TOTAL QTY.	MICRO-FILM NUMBER	MAINTENANCE CODE DATA: SOURCE CODE	INSTL CAPABILITY	PRE-INST. CAPABILITY	RECOVERABILITY	SUPPORT EQUIPMENT	FEDERAL STOCK NUMBER DATA: COGNIZANCE CODE	FEDERAL STOCK NUMBER	MFG. CODE (TSMC)
	270 - 5										
	270 - 74										
	271 - 10										
	271 - 11										
	308 - 26										
	308 - 27										
	309 - 23										
	309 - 24										
									R	5925-173-7162 OR	D334
91	210 - 40	12							R	5340-514-2670	GH80
	217 - 1										
	218 - 12										
	218 - 14										
	241 - 1										
	251 - 7										
	291 - 1										
	300 - 33										
	300 - 35										
	300 - 36										
	300 - 37										
	300 - 39										
									R	6645-049-6724 OR	W180
	314 - 29										
91050	96 - 20	4		P1	F	O	S		R	1680-319-2012	X110
	97 - 91										
	101 -108										
	102 - 84										
	102 -111										
	103 - 73										
	103 -120										
91051	98 - 36	11		P1	F	O	S		R	1680-562-4546	X110
91059	99 - 41	1		P1	F	O	S		R	1680-333-7762	X110
91060	99 - 63	1							R	1680-333-7763	X110
	100 - 80										
	100 -144										
	101 - 76										
	102 - 52										
911-36CNX-3/4	100	2									
91142	95 - 88	4		P1	F	O	S		R	2810-349-4307	PPWA
	96 - 21										
	97 - 91										
	101 -108										
	102 - 84										
	102 -111										
									R	1680-508-2732 OR	X110
	103 - 73										
	103 -120										
9138-4	188 - 40	1		P1					R	6615-390-7585	V088
	358										
9184Y-14-11/32		1									
9184Y-14-7/16	173 -82	1		P1	F	O	R		R	1680-601-0284	X110
9184Y-4-25/32	173 - 49	2		P1	F	O	R		R	1680-521-3160	X110
9184Y-6-13/32	173 - 42	1		P1					R	1680-511-3162	X110
9184Y-6-17/32	173	1		P1					R	1680-511-3161	X110
9184Y-8-1/4	173 - 43	1		P1	F	O	R		R	1680-511-3174	X110
92	226 - 2	17							R	5925-173-7161	D334
	234										
	241 - 2										
	251										
	254										
	263 - 3										
	270 - 2										
	272 - 1										
	275 - 5										
	281 - 3										
									R	5340-433-0677 OR	GH80
	295 - 10										
	314 - 25										
9200-PM		1							R	5945-295-4453	D334
9220	288 - 16	1									
9220-PM	218 - 8	24		A		O					
	221 - 5										
	221 - 9										
	221 - 13										
	221 - 17										
	224 - 7										
	224 - 8										
	224 - 9										
	224 - 21										
	269A- 22	1									
	269A- 51	1									
	277 - 2										
	286 - 17										
9220PGM		1									
9229-4629	285A- 63	1									
	286A- 8										
	287A- 25										
9230-3332		1							R	5945-556-5416	D448
9244	243 - 27	1									
	244 - 26										
93	226	4							P	5925-173-7163	D334
	234										
	261 - 9										
	293										
	302 - 15										
	302 - 16										
	308 - 8										
	308 - 9										
									P	5340-514-1191 OR	GH80
									R	2810-448-7088	PPWA

PART NUMBER	FIGURE AND INDEX	TOTAL QTY.	MICRO-FILM NUMBER	MAINTENANCE CODE DATA: SOURCE CODE	INSTL CAPABILITY	PRE-INST. CAPABILITY	RECOVERABILITY	SUPPORT EQUIPMENT	FEDERAL STOCK NUMBER DATA: COGNIZANCE CODE	FEDERAL STOCK NUMBER	MFG. CODE (TSMC)
										OR	
93084-61C		1									
93084-7A		1									
93085-13C		1									
9320-1		1							R	1005-091-7684	8210
9320-2		1							R	1005-091-7685	8210
93265-1-.120	71 - 81	2									
93265-1-.140	71 - 82	1									
9330-4106	285A- 18	3									
	285A- 19										
	285A- 67										
	287A- 28										
9397		1							R	2995-338-1055	X110
94	209 - 43	10							R	5925-173-7164	D334
	222 - 4										
	230 - 15										
	234										
	246										
	249										
	281 - 5										
	296 - 20										
	303 - 15										
	303 - 18										
									R	5340-514-3089 OR	GH80
	314 - 19										
9406-16S-8S		1									
9406-16S8S		1									
94064-21B		1									
945-375-300D	107 - 39	1									
	108 - 32										
945-375-300S		1									
945-375-300SH		1									
9450729	25 - 51	2		P1	F	O	S		R	2620-287-5249	Y120
9473-00	26 - 10	2									
	27										
9473-10	27 - 15	2									
9473-102	27	2									
9473-104	27	2									
9473-1185BAL		1									
9473-121	26	2									
9473-13	27 - 21	2									
9473-149	26 - 18	2									
9473-149A	26	2									
9473-16	26 - 3	4									
9473-166	26 - 58	4									
9473-17	26 - 4	4									
9473-18	26 - 14	2									
9473-180L	26 - 1	1									
9473-180R	26	1									
9473-185AL		1									
9473-185AR		1									
9473-185BL	26	1									
9473-185BR	26	1									
9473-185CL	26	1									
9473-185CR	26	1									
9473-185L		1									
9473-185R		1									
9473-19	26 - 12	2									
9473-2	25 - 53										
	26 - 29	2									
	27 - 24	1							R	5310-584-6653	XCPT
9473-21	26 - 62	2									
9473-23	27 - 17	2									
9473-29	26 - 61	2									
9473-3A	27 - 18	2									
9473-30	26 - 44	4									
9473-31L	26 - 27	1									
9473-31R	26	1									
9473-32	26 - 13	2									
9473-32A	26	2									
9473-33	26 - 33	2									
9473-33A	26	2		P1	F	O	C		R	5306-623-9349	XCPT
9473-34	26 - 24	4									
9473-35A	26 - 25	2									
9473-36	26 - 26	2									
9473-4	27 - 4	2									
9473-4-3	27 - 5	2									
9473-4A	27	1									
9473-48	27 - 6	2									
9473-49	26 - 19	2									
9473-49A	26	2									
9473-5	27 - 16	2									
9473-55	27 - 9	2									
9473-59	26 - 59	2									
9473-62A	26 - 52	1									
9473-63		2									
9473-63A	25 - 55	1							R	1630-544-0854	XCPT
	26 - 31										
9473-64A	26 - 53	1									
9473-65	26 - 58	4									
9473-66	26 - 57	4									
9473-74	27 - 20	2									
9473-76	25	2									
	26 - 32										
9473-80L	26 - 2	1									
9473-80R	26	1									
9473-81	26 - 28	6									
	27 - 25										
9473-85BL	26 - 39	1									
9473-85BR	26	1									
9473-85CL	26 - 39	1									
9473-85CR	26	1									
9473-86	26 - 5	2									
9473-88	26 - 64	2									

PART NUMBER	FIGURE AND INDEX	TOTAL QTY.	MICRO-FILM NUMBER	MAINTENANCE CODE DATA: SOURCE CODE	INSTL CAPABILITY	PRE-INSTL CAPABILITY	RECOVERABILITY	SUPPORT EQUIPMENT	FEDERAL STOCK NUMBER DATA: COGNIZANCE CODE	FEDERAL STOCK NUMBER	MFG. CODE (TSMC)
9473-9	27 - 8	2									
	27 - 28	1									
9473-92		2									
9473-92A	26 - 43	2									
9473-93	26 - 47	2									
9473-95L	26 - 21	1									
9473-95R	26	1									
9473A-00	26	1									
	27										
9473A-13	27	1									
9473A-4	27	1									
9473B-00	26	1									
	27										
9473BL	26	1		P1	F	0	R		R	1620-532-7301	XCPT
9473BR	25	1		P1	F	0	R		R	1620-532-7302	XCPT
	26										
9473CL	25 - 48	1		P1	F	0	R		R	1620-620-2886	XCPT
	26										
9473CR	25	1		P1	F	0	R		R	1620-620-2887	XCPT
	26										
9473L		1							R	1620-036-9484	XCPT
9473R		1							R	1620-036-9485	XCPT
94879	114	8									
95	215 - 6	4							R	3110-144-8884	G730
	234										
	283 - 1										
	296 - 21										
									R	5905-107-8204	E222
										OR	
									R	5925-257-7372	D334
										OR	
	314 - 24										
9510321	29 - 16	4							R	1630-218-8803	XGYR
9510574	29 - 12	1							R	1630-218-8810	XGYR
9510621	29 - 23	1							R	1630-218-8811	XGYR
9510637		2									
9510638		2									
9510639		2									
9510811	29 - 10	1							R	1630-218-8814	XGYR
9510812	29 - 9	1							R	1630-436-9894	XGYR
9510814	29 - 1	4							R	1630-436-9895	XGYR
9510815	29 - 8	1							R	5340-281-9864	XGYR
9510895	29 - 17	4							R	1630-182-6129	XGYR
9511157	29 - 32	1							R	1630-483-7959	XGYR
9518-1	349 - 75	1									
9521386		1							R	1630-370-7312	XGYR
9521388	29 - 4	24		P1	F	0	C		R	1630-370-7313	XGYR
9521391	29 - 3	1									
9521486		1							R	1630-370-7312	
9521533		1									
9521572	29 - 25	5									
9521757	29 - 11	1							R	1630-515-3302	XGYR
9521759C	29	4									
9521761C	29 - 20	1									
952186		8		P1	F	0	C				
952211386	29 - 7	4									
9522439		1									
9522455		1									
9522462		1									
9522835		2		P1	F	0	C		P	1630-515-4276	XYGR
9523454		1							P	1630-531-4725	XYGR
9530332	29 - 5	2							R	1630-436-9951	XGYR
9530892		1									
9530892C	29 - 13	1							R	1630-098-1995	XGYR
9530894	29 - 6	1									
9530936	64 -101	2		P1	F	0	R		P	1630-640-8519	XGYR
9530965		1									
9540729		2		P1	F	0	R		R	1630-370-7336	XYGR
9540729C	25 - 49	1							R	1630-370-2336	XYGR
	29										
	163 -106										
9540855		1									
9540856	25 - 50	2		P1	F	0	R		R	1600-C04-6383	XGYR
95410-933		1									
95410-935		1									
9541415	25	2									
954729C		1									
9555-A	234 - 25	2							R	6140-513-2397	D444
	235 - 25										
9555-B		1									
9555-D		1									
9555-E	234 - 24	1		P1					R	5975-522-3579	D446
	235 - 24										
957305		4									
96	234	1							R	5120-268-3579	S231
	283										
									R	5925-258-1549	D334
										OR	
									R	5325-174-5314	GB90
										OR	
	314 - 17										
97-181-20	269 - 31	1									
	269 - 46	4							R	5935-303-3453	D336
97-181-28		4		P1					R	5935-303-8131	D336
97-3100C-16-412P		1							P	5935-196-9673	
97-3106-10SL4S		10							P	5935-	
97-3106-12S3S		5									
97-3106-14S-2S	PG. 1010	1									
97-3106-14S-5S		1									
97-3106-14S2P		1									
97-3106-14S5P		1									
97-3106-14S5S		1									
97-3106-14S5SX		1									
97-3106-16-10S		1							R	5935-549-5134	D336
97-3106-16-10S438		1							R	5935-549-5134	D336

PART NUMBER	FIGURE AND INDEX	TOTAL QTY.	MICRO-FILM NUMBER	MAINTENANCE CODE DATA: SOURCE CODE	INSTL CAPABILITY	PRE-INSTL CAPABILITY	RECOVERABILITY	SUPPORT EQUIPMENT	FEDERAL STOCK NUMBER DATA: COGNIZANCE CODE	FEDERAL STOCK NUMBER	MFG. CODE (TSMC)
97-3106-18-1P		2									
97-3106-18-1S		1									
97-3106-18-12P	PG. 1010	2									
97-3106-18-20P	PG. 1010	2									
97-3106-18-9S		1									
97-3106-20-15S		1									
97-3106-20-18P		1									
97-3106-20-18S		1									
97-3106-20-27P		5									
97-3106-20-27S	PG. 1010	1									
97-3106-20-27S		4									
97-3106-20-29S		1							R	5935-636-7564	
97-3106-20-7S		1									
97-3106-22-14P	PG. 1010	1									
97-3106-22-14S	PG. 1010	2									
97-3106-22-14SX		1									
97-3106-22S-14SX	PG. 1010	1									
97-3106-24-28P		1									
97-3106-24-28S		1									
97-3106-28-11SW		1									
97-3106-28-12S		2		P1					R	5935-636-7637	
97-3106-28-12SW		2							R	5935-636-7570	
97-3106-28-12SX		2		P1					R	5935-636-7603	
97-3106-28-12SY		1							R	5935-636-7606	
97-3106-28-15P		1							R	5935-636-7562	D336
97-3106-28-16SW		1									
97-3106-28-17P		1									
97-3106-28-21S		1									
97-3106-28-21SX	PG. 1010	1									
97-3106-32-13P		1									
97-3106-32-13S		1									
97-3106A16-412S		1							R	5935-204-7492	D336
97-3106A16-412S1D1		1		M		F					
973G		1		P1					R	6610-533-1083	YUBU
975M		1		P1	F	0	R		R	6600-C01-8526	VCEJ
978K		1									
978R	315 - 85	1		P1					R	6610-663-8791	YIFX
	318 - 46										
98265		8									
98265-1-.090		1							R	5325-282-1876	GH80
98265-1-.110		4									
98265-1-.120	55	2		P1					R	5325-282-1943	GH80
	57										
	333										
98265-1-.130	55	8							R	5325-282-0618	GH80
	333										
98265-1-.140		2							R	5325-282-0617	GH80
98265-1-.150	55	17							R	5325-282-1848	GH80
	57										
	243 - 10										
	243 - 10	4									
	244 - 8										
	300 - 4										
	302 - 6										
	305 - 2										
98265-1-.160		1									
98265-2-.170		2									
98265-1-.180	347 - 19										
98265-1-.200	300 - 6	1									
	301 - 4										
98265-1-.220		1									
98265-1-.250		1									
98265-1-.290		1									
98265-1-.310		1									
98265-1-1.120		3									
98265-1-1-.150		1									
98265-1-120	57A	2									
98265-1-130	57A	1									
98265-1-150	57A	1									
98265-1-170		2									
98265-2-.110	300 - 2	2									
98265-2-.160	70 - 5	2		P1					R	5325-290-3989	GH80
	71 - 83										
	333										
98265-2-.170		8									
98265-2-.180	300 - 3	10		P1					R	5325-282-1847	GH80
	301 - 2										
	333										
98265-2-.190	44	5							R	5325-282-0658	GH80
	55										
	57										
	301 - 3										
	310 - 10										
	310 - 16										
98265-2-.200									R	5325-290-4916	GH80
										OR	
		6							R	5325-282-0620	GH80
98265-2-.210	71 - 28	16							R	5325-638-0014	GH80
98265-2-.220		1							R	5325-282-0619	GH80
98265-2-.240		2							R	5325-638-0016	GH80
98265-2-.250	70 - 6	2									
	71 - 84										
	302 - 7										
98265-2-170	306 - 3	2									
98265-2-190	57A	2									
98265-2-200	306 - 4	1									
98265-3-.260		2									
98265-3-.290	9 - 7	36							R	5325-282-1849	GH80
	71 - 85										
98265-3-.310	71 - 86	2							R	5325-282-1865	GH80
98265-4-.450		8									
98265-5-.490		2							R	5325-281-1554	GH80
98265-5-.500		2							R	5325-282-0664	GH80
98265-5-.510		2									
98265-5-.530		2									

PART NUMBER	FIGURE AND INDEX	TOTAL QTY.	MICRO-FILM NUMBER	MAINTENANCE CODE DATA: SOURCE CODE	INST'L CAPABILITY	PRI-INT'L CAPABILITY	RECOVERABILITY	SUPPORT EQUIPMENT	FEDERAL STOCK NUMBER DATA: COGNIZANCE CODE	FEDERAL STOCK NUMBER	MFG. CODE (TSMC)
98265-5-.540		2							R	5325-285-6305	GH80
98265-6-.560		2							R	5325-285-6253	GH80
98265-7-.180		1									
98282-2-.160	43	7									
98292-1-.100	48 - 15	3							R	5325-432-9888	GH80
98292-1-.110		2									
98292-1-.120	48 - 18	1							R	5325-432-9890	GH80
98292-1-.130	48 - 17	1							R	5325-432-9891	GH80
	71										
98292-1-.140	260 - 6	4									
98292-1-100		1							R	5325-432-9913	GH80
98292-1-140		4									
98292-160		5									
98292-2-.160	43	14							R	5325-449-3207	GH80
	48 - 16										
	269A- 35	2									
98292-2-.170	44 - 80	6		M		O					
98292-2-.180	227 - 31	2							R	5325-432-9895	GH80
98292-2-.210	44 - 79	2		M		O			R	5325-281-4917	GH80
98292-2-.250	43	1									
98292-2-.260	227 - 30	2									
98292-2-160		7							R	5325-449-3207	GH80
98292-2-250		1							R	5325-432-9902	GH80
98292-8-.820	71 - 31	1									
98293-2-.220	334 - 46	5									
98293-2-140	284A- 33	1									
98477	43 - 9	2							R	5310-596-7244	G190
98480		4							R	5310-596-5569	G190
9860-3		1							R	6610-346-1512	V170
986006	326	AR									
9881		1							R	3110-516-5301	G730
98821		1							R	4110-300-3709	Y120
98836	280	4									
99200	351 - 21	1									
99336	346	12									
	347 - 20										
9947-C-.130		8									
99785-2									R	5315-598-9121	GH80
										OR	
	234	9							R	5315-141-6355	GH80
	235										
	284A- 31										
	334										
998292-2-.260		4									
99833	269A- 42	2									
99833-P-.130	71	18									
99833C.130		6		P1							
99833P.130		1									
99833P-130		39									
99836	9	159							R	5315-449-2945	GH80
	43										
	44										
	48										
	55										
	57										
	57A										
	71										
	227 - 32										
	300										
	301										
	305										
	306										
	310										
	333										
99836P-.130	269A- 36	2									
99839		6									
99871-P-.098	284A- 2	6									
	334										
99871C.098		6		M		O					
99947-C-.130	43 - 91	18									
	346 - 10										
	347 - 21										
99947-P-.130	14	17		M		O			R	5325-449-2967	GH80
	44										
	48										
	71										
	362										
99947C.130		15		M		O			R	5325-449-2966	GH80
99947P.130		88							R	5325-449-2967	GH80
99967C.098		4									
99967CC098		4									

PART NUMBER	FIGURE AND INDEX	TOTAL QTY.	MICRO-FILM NUMBER	MAINTENANCE CODE DATA: SOURCE CODE	INST'L CAPABILITY	PRI-INT'L CAPABILITY	RECOVERABILITY	SUPPORT EQUIPMENT	FEDERAL STOCK NUMBER DATA: COGNIZANCE CODE	FEDERAL STOCK NUMBER	MFG. CODE (TSMC)

6 86
6 86

PART NUMBER	FIGURE AND INDEX	TOTAL QTY.	MICRO-FILM NUMBER	MAINTENANCE CODE DATA					FEDERAL STOCK NUMBER DATA		
				SOURCE CODE	INSTL CAPABILITY	PRE-INSTL CAPABILITY	RECOVERABILITY	SUPPORT EQUIPMENT	COGNIZANCE CODE	FEDERAL STOCK NUMBER	MFG. CODE (TSMC)

PART NUMBER	FIGURE AND INDEX	TOTAL QTY.	MICRO-FILM NUMBER	MAINTENANCE CODE DATA					FEDERAL STOCK NUMBER DATA		
				SOURCE CODE	INSTL CAPABILITY	PRE-INSTL CAPABILITY	RECOVERABILITY	SUPPORT EQUIPMENT	COGNIZANCE CODE	FEDERAL STOCK NUMBER	MFG. CODE (TSMC)

NAVY-The Reynolds & Reynolds Co.-Dayton, O.-2000